SPALLATION NEUTRON SOURCE (SNS)

Marion M. White, for the SNS Project

Argonne National Laboratory
9700 S. Cass AV, Argonne, IL, USA 60439

Oak Ridge National Laboratory, Spallation Neutron Source
701 Scarboro RD, Oak Ridge, TN, USA 37830

ABSTRACT

The Spallation Neutron Source [1], located at Oak Ridge, TN, is a state-of-the-art neutron-scattering facility presently under construction as a collaborative effort of six national laboratories. The facility is comprised of a high-power particle-accelerator system, a liquid-mercury target-moderator system, and a suite of world-class scientific instruments. One-ms-long negative-hydrogen-ion (H^-) pulses are produced by an ion source. The ion beam is accelerated to 185 MeV by normal conducting (NC) linear accelerator (linac) cavities, and further accelerated to 1 GeV by a superconducting linac [2]. The acceleration is accomplished by means of niobium superconducting radiofrequency (SRF) cavities that operate at 2.1K. The linac beam is stacked in a compressor ring, and 695-ns-long pulses are extracted onto the target at a 60-Hz rate. Neutrons are produced by spallation in the mercury, and their energy is moderated to useable levels, in part by supercritical hydrogen moderators. The simultaneous performance goals of more than one MW of initial proton beam power, 95% facility availability, and the desire for hands-on maintenance capability in the accelerator complex place significant demands on the performance and operational reliability of the technical and conventional systems. An overview of the SNS facility, including its purpose, major components, and a summary of the present status is presented, with particular emphasis on the superconducting linac and the cryogenic moderators.

INTRODUCTION

Low energy neutrons are powerful tools that can enable scientists and engineers to gain unique insight into materials at the atomic level. Neutrons interact with a simple, well-understood coupling to atoms and spins, and are sensitive to a wide range of magnetic and structural properties. Because their magnetic and nuclear cross-sections are

comparable, and the nuclear cross section magnitudes are similar across the periodic table, information on the structure of bio- and polymeric materials, including atomic motion, magnetic properties, and light atom locations can be acquired. Stresses can be measured, allowing for improved engineering of production processes and new component designs. Neutrons can penetrate deeply into dense samples, making them useful in extreme sample environments. Although neutron scattering was developed in the US, there is now a serious shortage of facilities in this country. A powerful new neutron source is urgently needed.

The SNS, located at Oak Ridge, TN, is a state-of-the-art neutron-scattering facility presently under construction as a collaborative effort of six US national laboratories, Argonne National Laboratory (ANL), Brookhaven National Laboratory (BNL), Thomas Jefferson National Accelerator Facility (TJNAF), Lawrence Berkeley National Laboratory (LBNL), Los Alamos National Laboratory (LANL), and Oak Ridge National Laboratory (ORNL) (http://www.sns.gov). The facility is comprised of a pulsed high-power particle-accelerator system, a liquid-mercury target-moderator system, and a suite of world-class scientific instruments. When the SNS comes online in 2006, it will greatly aid in re-establishing the capability and leadership of the US neutron scattering community.

TABLE 1 lists a summary of the facility parameters and FIGURE 1 shows a recent aerial photograph of the SNS site with the major facility components superimposed on it.

TABLE 1. Summary of SNS Facility Parameters

Parameter	Value	Unit	Parameter	Value	Unit
Proton Beam Energy on Target	1.0	GeV	Linac Length, Incl. Front-End	335	m
Proton Beam Current on Target	1.4	mA	HEBT. Line Length	170	m
Proton Beam Power on Target	1.4	MW	Ring Circumference	248	m
Pulse Repetition Rate	60	Hz	Ring Fill Time	1	ms
Beam Macropulse Duty Factor	6	%	Ring Extraction Gap	250	ns
Average Current per Macropulse	26	mA	RTBT Line Length	150	m
Peak H- Current @ Front End	> 38	mA	Protons per Pulse on Target	1.6×10^{14}	
Chopper beam-on Duty Factor	68	%	Target Material	Hg	
RFQ Output Energy	2.5	MeV	Approximate Volume	1	m^3
Drift Tube Linac Energy	87	MeV	Approximate Weight	18	Tons
Coupled Cavity Linac Energy	185	MeV	Minimum Initial Instruments	5	
Superconducting Linac Energy	1	GeV	Number of Moderators	4	

FIGURE 1. Overview of the Spallation Neutron Source in Oak Ridge, Tennessee. Major facility buildings are superimposed on a recent aerial photograph of the construction site.

Neutrons of appropriately low energy are delivered to the experimental area, eventually to the scientific instruments by means of neutron guides. The scientific instruments are provided by ANL and ORNL. Since many of the experimental samples to be analyzed are challenging to prepare and often have very short lifetimes, the SNS facility must operate very reliably during its scheduled operating periods.

The simultaneous performance goals of more than one MW of proton beam power, 95% facility availability, and the desire for hands-on maintenance capability in the accelerator complex place significant demands on the performance and operational reliability of the technical and conventional systems.

ACCELERATOR SYSTEM

Front-End Systems and NC Linac

The SNS linac must deliver a 1-GeV H^- beam with an initial average power of at least one MW. The 60-Hz linac operates at a 6 % beam duty cycle and has a 1-ms-long pulse. FIGURE 2 is a block diagram showing the basic linac configuration and major linac components. Information about the rf power sources, energy at various points along the linac system, and system design and procurement responsibilities is also indicated.

One-ms-long H^- pulses are produced by a front-end system that is provided by LBNL. It consists of an rf-driven, volume-production ion source, a beam-chopping system, a radiofrequency quadrupole (RFQ) that accelerates the 65 keV beam from the ion source to 2.5 MeV, and a beam-transport and matching section. A drawing of the ion source and low energy beam transport is shown in FIGURE 3, and FIGURE 4 shows the Front End layout.

Immediately downstream of the front end, beam is accelerated from 2.5 MeV to 87 MeV by a NC drift tube linac (DTL), provided by LANL. The DTL consists of six tanks with a total of 210 drift tubes, each driven by a 402.5-MHz, 2.5-MW klystron. A coupled-cavity linac (CCL), operating at 805 MHz and powered by four 5-MW klystrons, further accelerates the beam to 185 MeV. It is made of high-conductivity copper.

Schematic views of the DTL and CCL are shown in FIGURES 5 and 6, respectively. A resonance-control system maintains the correct rf frequency in the normal conducting linac cavities by means of water. The water also serves to remove the power dissipated in the cavity walls due to surface currents, preventing melting of the structures. The rf power systems, rf controls, and resonance-control water systems are provided by LANL [3].

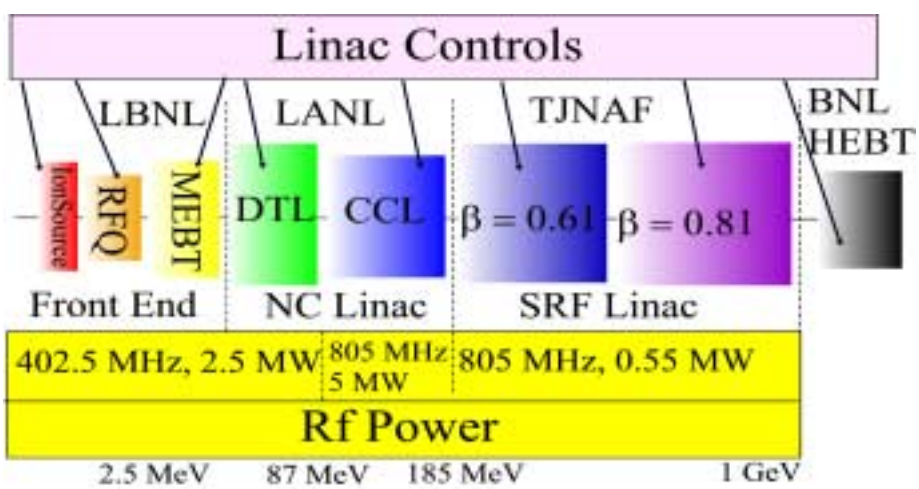

FIGURE 2. Linac Configuration, including normal and superconducting sections.

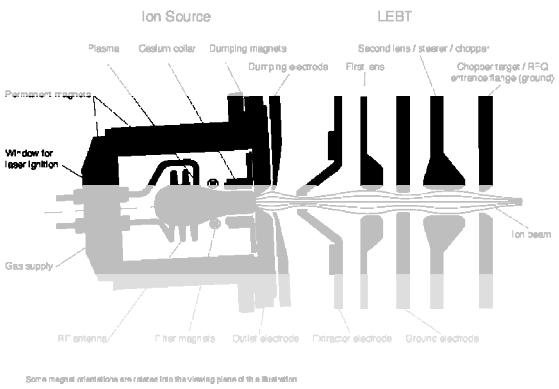

FIGURE 3. Detail of the ion source and LEBT.

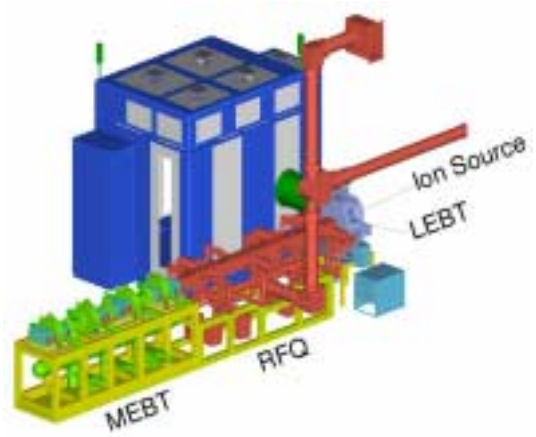

FIGURE 4. Front End layout.

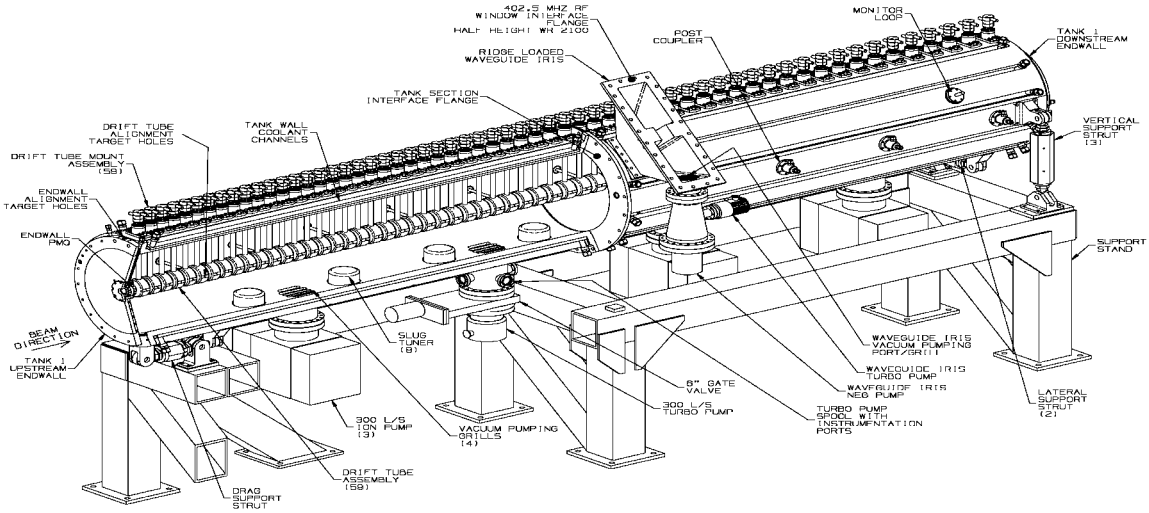

FIGURE 5. Cutaway view of a DTL tank, showing drift tubes, slug tuners, couplers, and input iris.

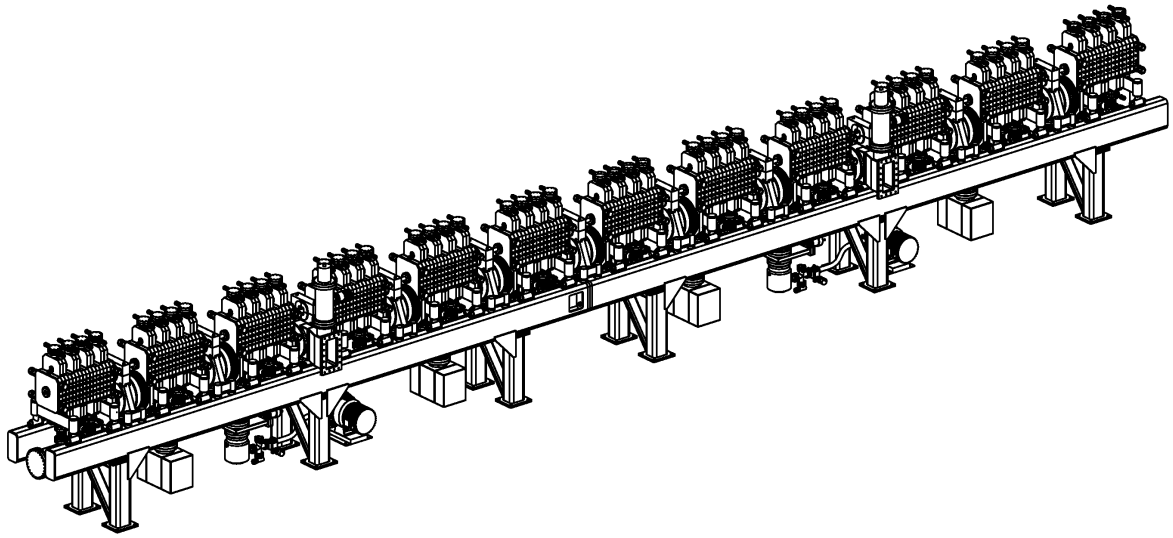

FIGURE 6. One CCL module assembly is shown, including accelerating cells and powered couplers.

SRF Linac and Central Helium Liquefier (CHL)

Initially, the SNS was designed entirely with NC rf structures. A linac that meets the SNS power level and pulse structure requirements can either be designed based on NC or SRF technology. SRF technology provides potential for operational flexibility, easier construction, and more efficient wall plug to beam power conversion. The electric power costs are expected to be lower for SRF, despite the addition of the CHL, since the linac uses 10 to 12 MW less power than the previous NC design. Significant recent developments in SRF technology helped pave the way for the SNS conversion to SRF. DESY demonstrated that it is possible to control SRF cavities in pulsed mode at the TESLA Test Facility (TTF) linac and reliably achieved high gradients in nine-cell cavities that were delivered by industrial vendors, and a high-power (380-kW) CW coaxial coupler that meets SNS requirements was developed by the KEK-B team in Japan. The high-energy end of the SNS linac that accelerates the beam from 185 MeV to 1 GeV is now based on SRF niobium cavities that operate at 2.1K, as described below.

Beam exits the CCL and travels through a differential pump and electrostatic-precipitator section whose purpose is to prevent particles and gas from entering the SRF cavities. It then enters the first of 33 medium-β cavities arranged in eleven cryomodules and is accelerated to about 390 MeV where it enters the high-β section, consisting of 48 cavities. Here, β is the ratio of the speed of the particle to the speed of light. The medium-β cavity is designed for a geometric β of 0.61, and the high-β cavity is designed for a geometric β of 0.81. FIGURE 7 shows photographs of a medium-β cavity and of a high-β cavity that is equipped with stiffening rings to reduce effects of Lorenz detuning forces from the pulsed rf fields. FIGURE 8 shows a medium-β cavity in its helium vessel, and FIGURE 9 shows a medium-β cryomodule. A detailed description of the cavities and cryomodules can be found in [4] and the references therein.

The beam aperture is about 2.5 times greater in the SRF linac than in the warm CCL, and cryogenic cooling intrinsically provides better vacuum, leading to a potential for lower beam losses. Radiation resulting from beam loss can cause accelerator components to become activated, so low beam losses are especially important to the SNS facility. It is necessary and desirable to minimize radiation exposure to workers during maintenance, thus designs and operations are carried out with the goal of losing beam in well-defined places and permitting hands-on maintenance in the rest of the accelerator.

SNS requires a cryogenic system with a capacity of about half that of the CEBAF system, so the CEBAF design was adapted with very minor modifications. The SNS rf frequency is lower than CEBAF's, 805 vs. 1500 MHz, so its optimum temperature is just below Lambda [5]. The refrigerator operates at 2.10 K, with a large margin of 0.07 K for pressure drops in the return of the transfer line and cryomodule (0.005,7 Bar).

FIGURE 10 is a block diagram of the refrigeration system, and TABLE 2 lists major CHL parameters. FIGURE 11 shows a layout of the CHL. The system consists of two pairs of warm compressors plus an installed spare pair for better availability.

FIGURE 7. Photographs of β = 0.61 (left) and β = 0.81 (right) cavities.

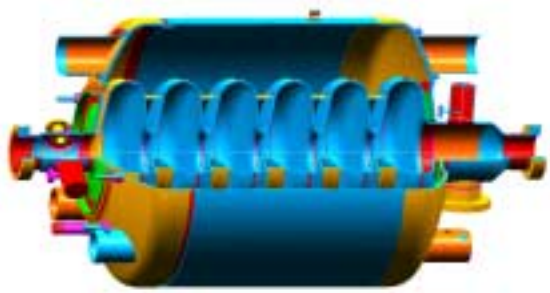

FIGURE 8. β=0.61 cavity in its helium vessel.

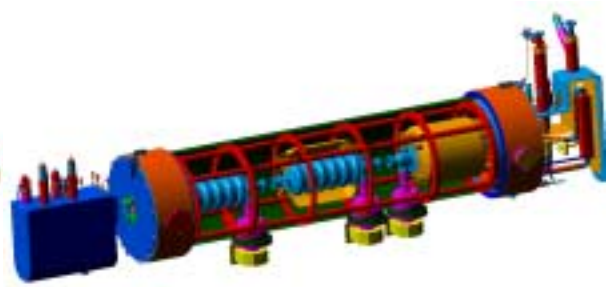

FIGURE 9. β=0.61 cryomodule.

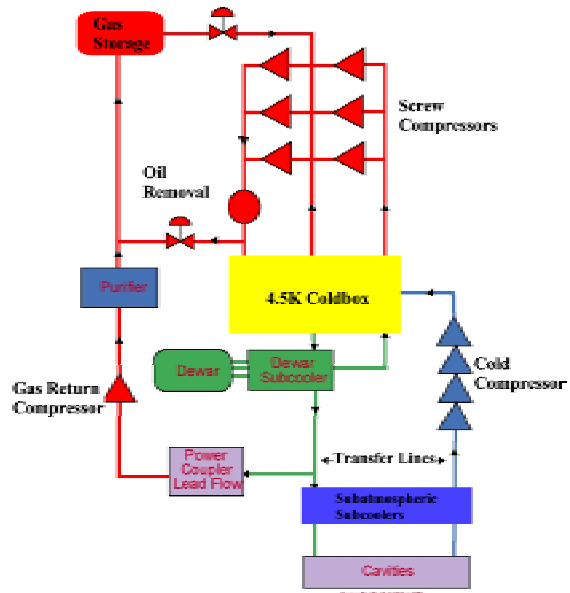

FIGURE 10. Functional diagram of the CHL.

TABLE 2. Refrigeration parameters for 32 cryomodules.

Cryomodules	Primary	Secondary	Shield
Temperature	2.10 K	5.0 K	35-55K
Pressure	0.041,3 Bar	3.0 Bar	4.0-3.0 Bar
Static load	850 W	5.0 g/sec	6125 W
Dynamic load	600 W	2.5 g/sec	0 W
Capacity	2,850 W	15 g/sec	8300 W
Margin	100%	100%	35%

Each of the six skids has a three-stage 100-ppm oil removal system, followed by three stages of coalescer-demisters, and a final charcoal bed with particulate filter. This system supplies a 4.5 K coldbox that uses a standard liquefier cycle to produce a 3-Bar 4.5-K supply stream that supplies helium to the cryomodules. At each cryomodule there are two JT valves: 1) 4.5 K fundamental power coupler lead flow supply and, 2) 2.1-K 0.041-Bar cavity cooling. The cavity cooling boil-off is returned to a set of four cold compressors that are capable of 120 g/s steady state. They recompress the stream to 1.05 Bar at about 30 K where it is used to provide counter-flow cooling in the 4.5 K coldbox.

Cryogen Transfer Lines

The SNS transfer lines are the same design as those at CEBAF but the dimensions are modified to account for the SNS cryomodule spacing. The supply line is 6-IPS (168-mm

OD) with a 1-IPS (30-mm ID) primary supply and an eccentric 35K shield. The return line is 12-IPS (324-mm OD) with a 6-IPS (163-mm ID) primary subatmospheric return and eccentric 55K shield. More detailed information can be found in reference [3]. FIGURE 12 shows the transfer line cross-sections. FIGURE 13 is a photograph of an SNS transfer line prototype developed at Oak Ridge.

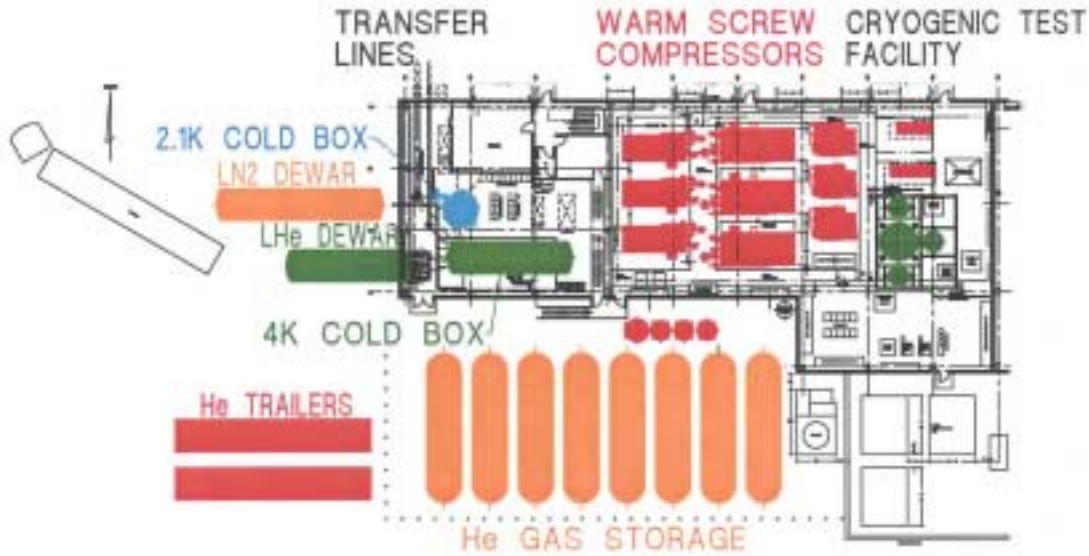

FIGURE 11. Layout of the CHL.

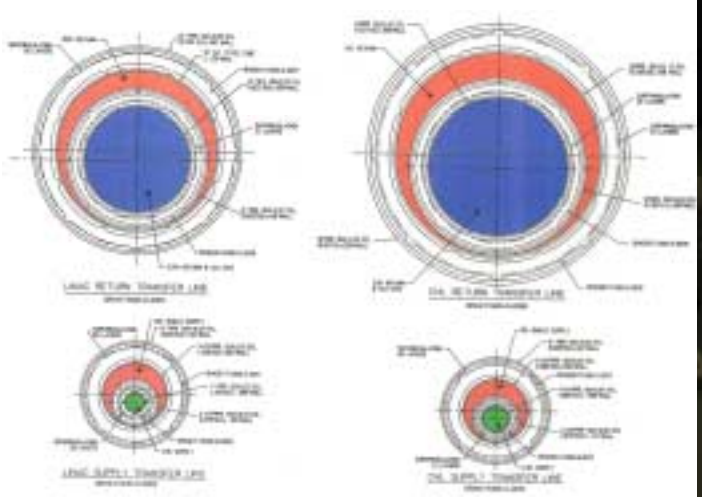

FIGURE 12. Transfer line cross section

FIGURE 13. Prototype Transfer Line.

CHL Controls - ORNL

The CHL produces, regulates and transports the cold helium gas through the Transfer Lines to the Cryomodules for the purpose of cooling the niobium cavities in the cryomodules to a temperature of 2.1 K. The Integrated Control System (ICS) acquires and analyzes data from a variety of CHL sensors to enable it to control various actuators in the

CHL. The ICS helps to ensure that operation of the CHL system satisfies the needs of the cryomodules, does not pose hazards to the public, the environment, or the workers, and that it does not pose a hazard to the integrity and continued operation of the CHL, transfer lines or cryomodules. The ICS also processes the collected data for presentation to the operators, alarm reporting, and archiving.

The ICS is a two-tier control system. The higher-level control system is based on the Experimental Physics and Industrial Control System (EPICS) software. EPICS contains all automatic control loops, start-up and shutdown sequences, operator interfaces, plus alarming, archiving, and other advanced functions. Low-level control and interlock algorithms run in local Programmable Logic Controllers (PLC). Local operator interface panels are connected to the PLCs for operation of some control valves, compressors, and other essential devices. These local control panels may be used to maintain operation of the CHL if the higher-level ICS computer system fails.

TARGET AND MODERATOR SYSTEMS

The target is about one cubic meter, or 18 tons, of circulating mercury and is provided by ORNL [6]. Neutrons are produced by spallation in the mercury when the high-energy protons interact with the mercury nuclei. FIGURE 14 is an overview of the high-power target system. The moderator systems must function in an integrated fashion with the target and reflector assemblies to produce low-energy neutrons for use in the scattering instruments that directly view the surfaces of the moderator vessels. Specifically, the initial neutron energies are too high to be useful to the experiments, so moderators reduce the energy (or temperature) of neutrons from the target to less than a few electron volts, so they are useful to the experimenters. Three of the moderators are cryogenic hydrogen at supercritical pressure nominally operating at 20 K. The hydrogen loop is cooled by a helium refrigeration system. The refrigeration system has a 7.5 kW capacity at 16.5 K. The fourth moderator is ambient light water nominally operating at 30° C. The downstream moderator has a light water pre-moderator on all but the viewed surface. The water also serves to remove heat generated in the helium and vacuum vessels.

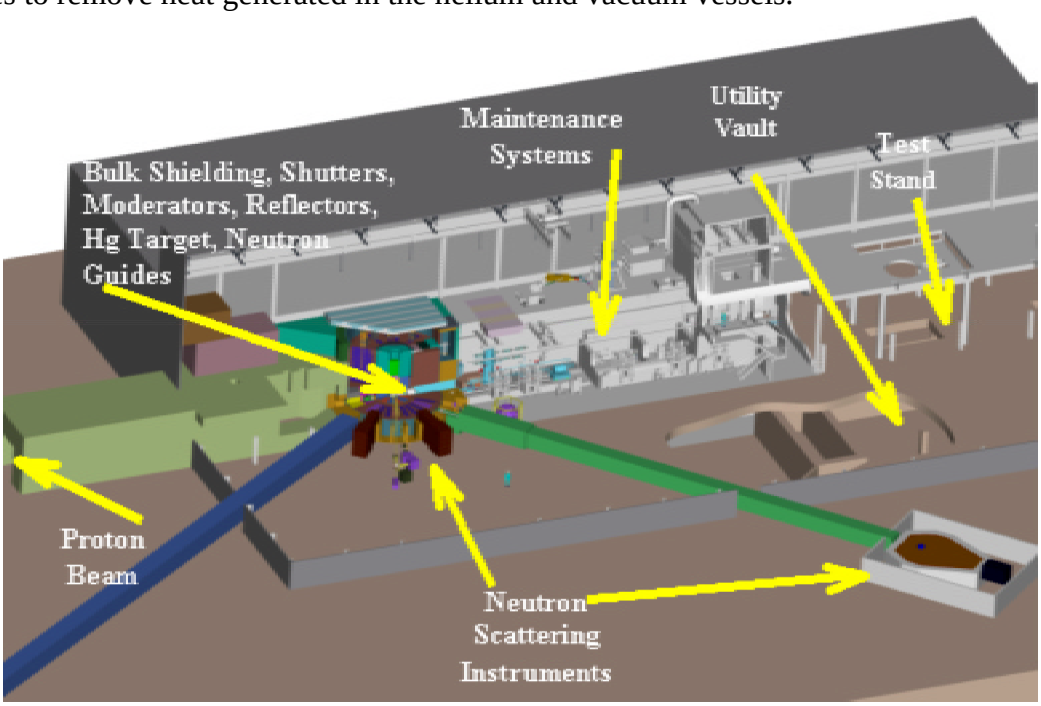

FIGURE 14. Overview of the high-power target system.

The cryogenic hydrogen loop, which services the cold moderators, is pressure and temperature controlled. An independent transfer line from the Hydrogen Utility Room services each moderator. A control pressure margin of at least 0.1 MPa above the critical pressure of hydrogen is maintained. The hydrogen inventory is 4-kg. FIGURE 15 shows a picture of the moderator system, FIGURE 16 shows a block diagram of the moderator systems module configuration, and FIGURE 17 shows the multi-vessel moderator design.

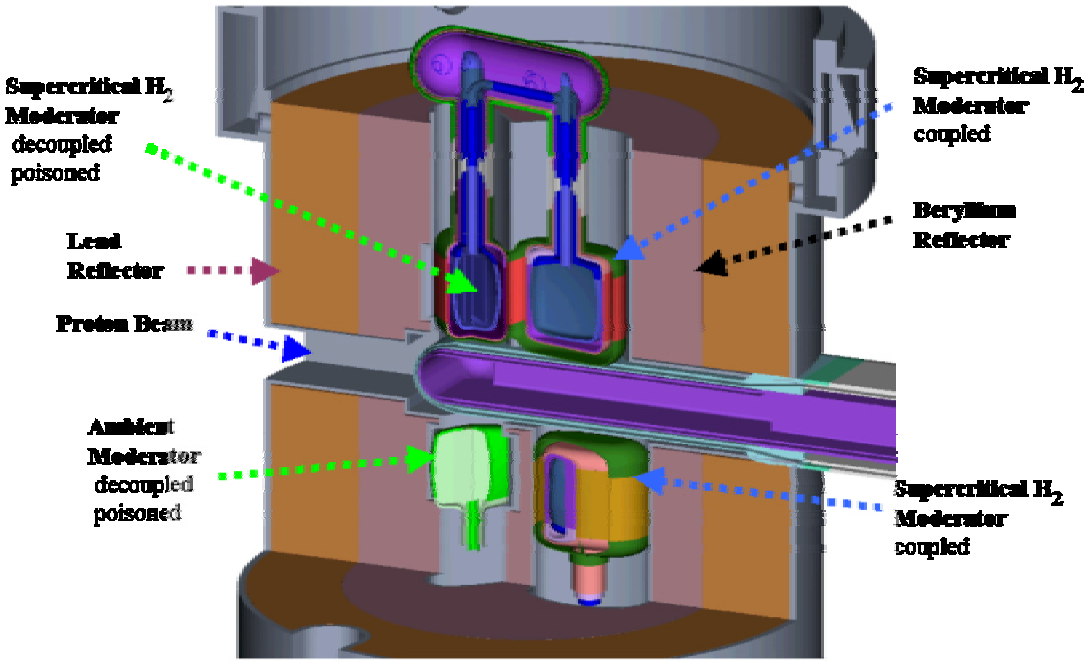

FIGURE 15. The moderator system.

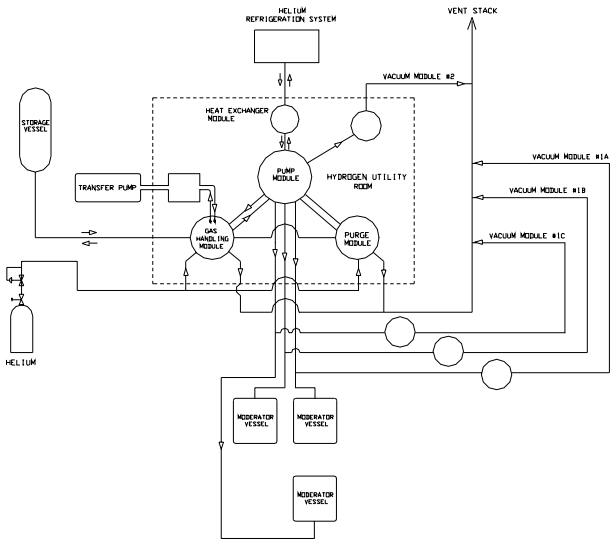

FIGURE 16. Moderator Module Configuration

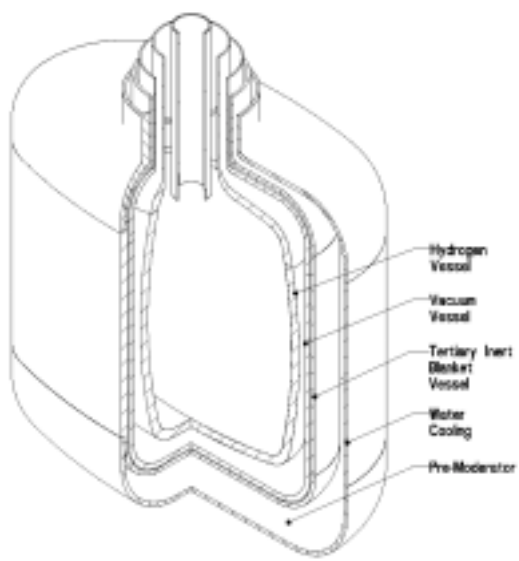

FIGURE 17. Multi-vessel Design.

As part of a nuclear facility, a number of safety features are implemented into the design of the moderator system: Hydrogen is doubly isolated from atmospheric air by the addition of an inert gas blanket, which encloses the entire loop. Hydrogen gas is stored within the system at all times, whether running or not and a gas charge could remain in the loop for as long as three years. At this point it may become necessary to replace the hydrogen as a precaution against an accumulation of radioactive contamination. As a

further precautionary measure, all hydrogen-bearing modules will be enclosed in a utility room, which will be passively ventilated and continuously monitored for traces of hydrogen. The hydrogen loop is protected against positive pressures above 1.9 MPa by rupture discs that exhaust into a dedicated vent system, which is inerted with nitrogen gas. Rupture discs or relief valves, which exhaust into the dedicated vent system, also protect all other regions that could become pressurized with hydrogen, such as vacuum or helium blanket chambers.

CONCLUSION

The SNS is presently under construction. At the time of this conference, more than 1.3 MCY of earth have been excavated, and the tunnel concrete is being poured. SNS is on schedule to be completed in June of 2006 and is within its budget. Users are welcome.

ACKNOWLEDGMENTS

This paper is presented on behalf of all SNS colleagues whether they are members of the Partner Laboratories, or are among the friends and colleagues worldwide who have collaborated in this effort together with us.

It is prepared for the U.S. Department of Energy Office of Science by UT-BATTELLE, LLC managing Spallation Neutron Source activities at Argonne National Laboratory, Brookhaven National Laboratory, Thomas Jefferson National Accelerator Facility, Lawrence Berkeley National Laboratory, Los Alamos National Laboratory, and Oak Ridge National Laboratory under U.S. Department of Energy contract DE-AC05-00OR22725.

REFERENCES

1. NSNS Collaboration, “NSNS Conceptual Design Report,” NSNS-CDR-2/V1, Oak Ridge, TN (1997).
2. Y. Cho, et al., “Preliminary Design Report: Superconducting Radio Frequency Linac for the Spallation Neutron Source,” SNS-SRF-99-101, December 20, 1999.
3. D. Rees, et al., “The RF System Design for the Spallation Neutron Source,” Proceedings of the 2001 Particle Accelerator Conference, June 12-16, 2001, Chicago, IL, and the references therein.
4. C. Rode, “The SNS Superconducting Linac System,” Proceedings of the 2001 Particle Accelerator Conference, June 12-16, 2001, Chicago, IL, and the references therein.
5. C.R. Rode, “Temperature Optimization for Superconducting Cavities,” IEEE Applied Superconductivity Conference 1998, September 1998.
6. A. Gabriel, “Targets for High-Intensity Particle Production,” Proceedings of the 2001 Particle Accelerator Conference, June 12-16, 2001, Chicago, IL, and the references therein.