Disposal of Partitioning-Transmutation Wastes

Charles W. Forsberg

Oak Ridge National Laboratory
P.O. Box 2008; Oak Ridge, TN 37831-6179
Tel: (865) 574-6783; Email: forsbergcw@ornl.gov

Accelerator Transmutation of Waste Program Meeting
Oak Ridge National Laboratory
Oak Ridge, Tennessee 37830
June 13-14, 2001

The submitted manuscript has been authored by a contractor of the U.S. Government under contract DE-AC05-00OR22725. Accordingly, the U.S. Government retains a nonexclusive, royalty-free license to publish or reproduce the published form of this contribution, or allow others to do so, for U.S. Government purposes. File: ATW.June.2001

Outline
(List Of Theses)

- **Partitioning–transmutation (P–T) will generate large quantities of low-heat radionuclide (LHR), long-lived wastes**
- **Geological disposal is needed for LHR wastes**
- **New methods for LHR waste disposal are needed**
- **P-T high-heat radionuclide (HHR) wastes change the repository design and creates new options**
- **An integrated ATW/repository path forward is required**

Partitioning–transmutation (P–T) Will Generate Large Quantities Of Low-Heat Radionuclide (LHR), Long-lived Wastes

Recycle uranium

Failed equipment, filters, etc.

Long-lived, low-heat wastes (optional)

Geological Disposal Is Desirable For Low-Heat Radionuclide Wastes

(A few curies of long-lived radionuclides in shallow land disposal have bigger impact than a million curries in a geological repository)

Fuel Cycle Human Health Impacts Are Determined By Long-Lived Curies Released And In Shallow Land Burial (NEA 2000)

Total Fuel Cycle Public Radiation Exposures (Man Sv/Gwa)

Fuel cycle stage	Once through	Reprocessing (MOX)	Source
Mining & Milling	**1.0**	**0.8**	**^{230}Th, ^{226}Ra**
Conversion, enrichment, and fabrication	**0.0009**	**0.0009**	
Power generation	**0.6**	**0.6**	**^{14}C**
Reprocessing/vitrification	**N/A**	**1.2**	**^{14}C**
Transport	**trivial**	**trivial**	
Disposal	**0**	**0**	
Total	**1.6**	**2.6**	

Requirements For Disposal Of Depleted Uranium: Activity < Recycle Uranium
(Impact Of Fuel Cycle Analysis)

- **For commercially licensed disposal facilities, U.S. Nuclear Regulatory Commission stated opinion is that deep disposal is required**
- **Europe (France, Germany, etc.) requires geological disposal**
- **DOE analysis**
  - **Performance assessments prevent shallow-land disposal at most sites (OR, SRS, Hanford)**
  - **NTS may be be a candidate (best site in system)**

Geological Vs Shallow Land Disposal

- **Geological disposal is a million to a billion times better than shallow land disposal**
  - **Erosion removes 600 m of crust per billion years**
  - **Geological mechanisms limit releases by groundwater migration**
- **Any fuel cycle with significant curies of long lived radionuclides to shallow land burial will be at a serious disadvantage**

Methods For Low Heat Radionuclide Waste Disposal Are Needed

Yucca Mountain is designed for HLW and SNF

No planned capability for higher-volume LHR wastes

Disposal of LHR waste is expensive if use SNF WPs

Very-Low-Heat Radionuclides May Be Disposed Of In Silos

- **With low decay heat, no need exists to spread the wastes over kilometers of tunnels and thousands of WPs**
- **Silos replace WPs (See appendix)**
  - **Better performance**
  - **Significantly lower costs (up to 10,000 t of SNF wastes per silo)**
- **Significant European experience with silos**

Swedish SFR Silo For Intermediate-Level Radioactive Waste

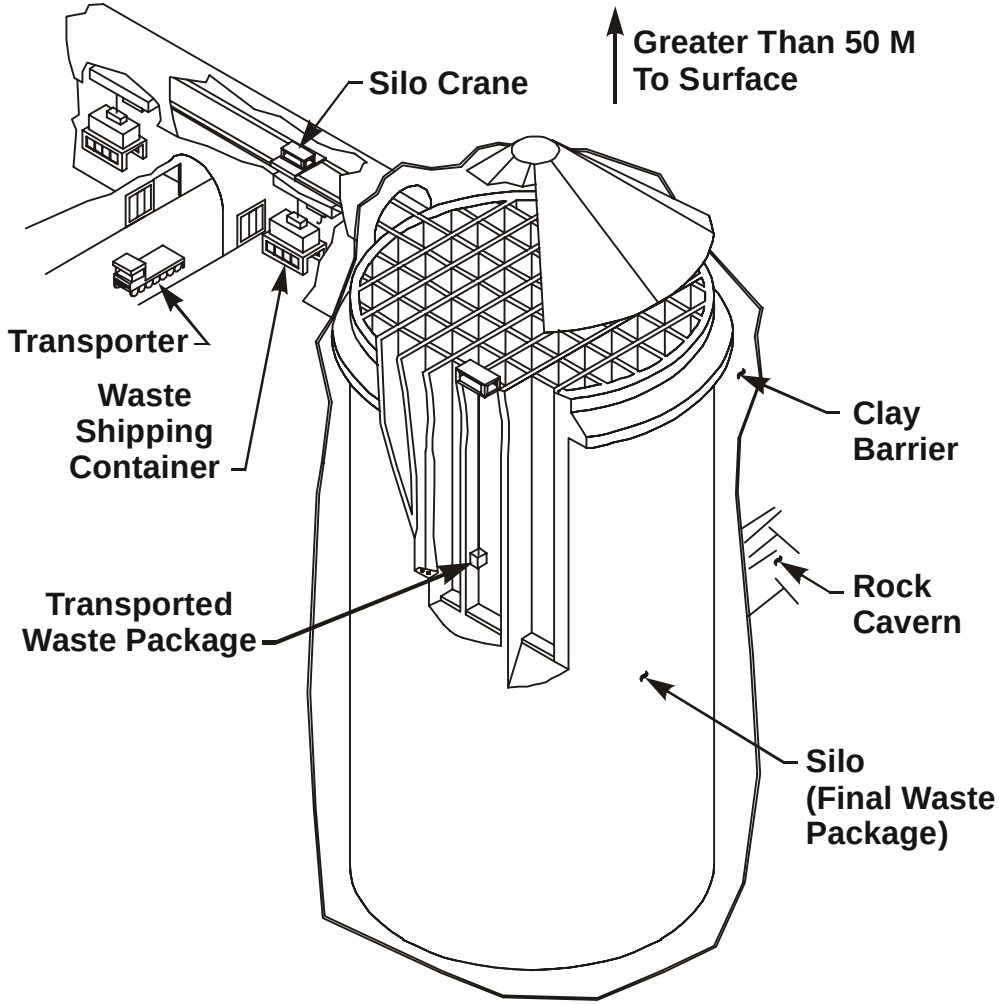

ORNL DWG 89C-1100

P-T High-Heat-Radionuclide (HHR) Wastes Permit Alternative Repository Designs And Increase Repository Capacity

(P-T Destroys Plutonium, Americium, and Curium—The *Long-Lived* High-Heat Radionuclides)

Repositories Are Expensive Because Of Radioactive Decay Heat

- **Temperature limits control design**
  - **Higher temperatures degrade waste forms, waste packages (WPs), and geology**
  - **Performance is degraded**
- **Temperature is limited by spreading SNF and HLW over a large area**
  - **11,000 WPs**
  - **100 km of disposal tunnels (5.5 m in diameter)**
- **SNF and HLW repositories are like automobile radiators - flat to reject heat**

Determined by Heat Load
(Cs, Sr, Pu, Am, Cm)

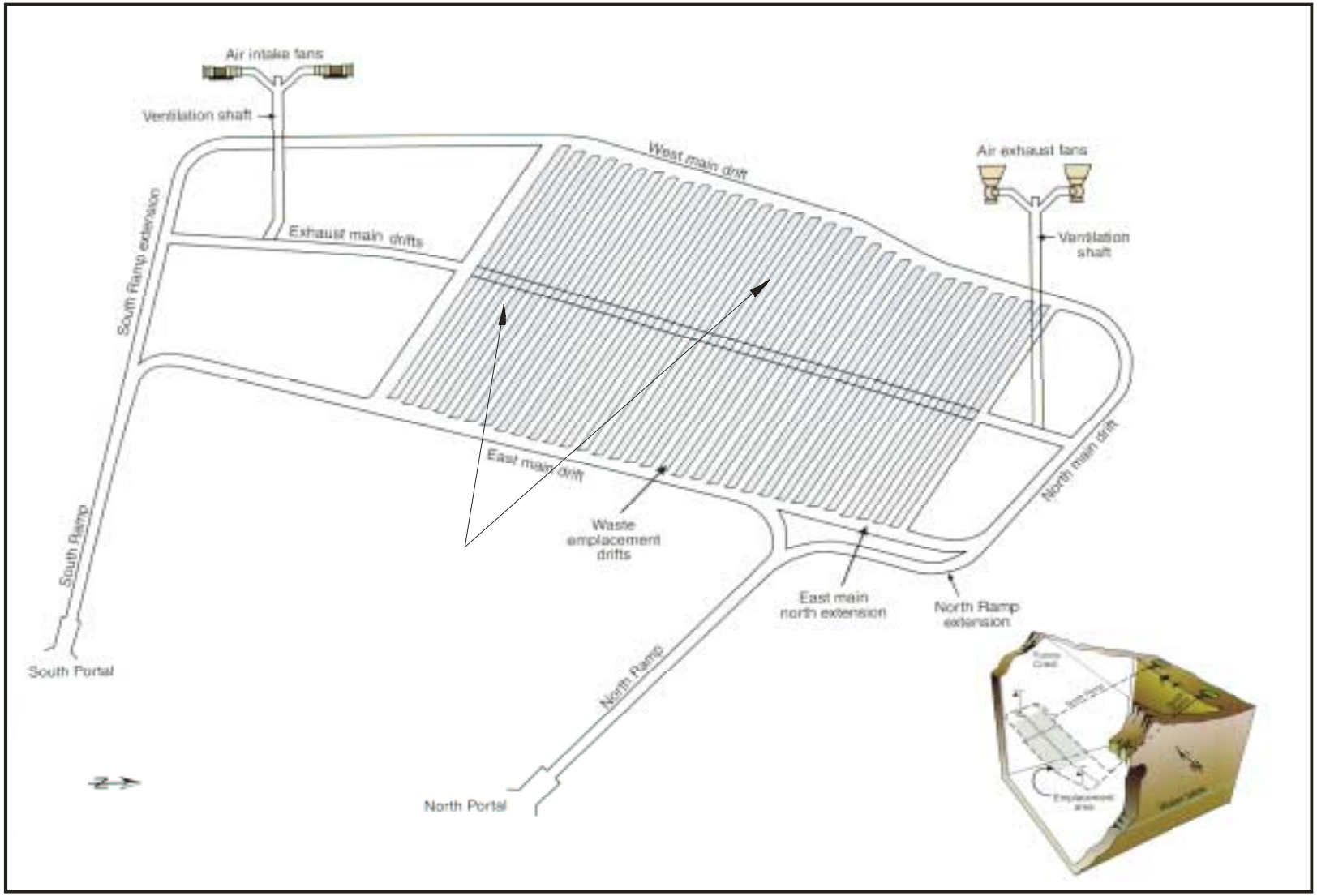

Different Radionuclides Control Different Repository Temperature Limits

- **Shorter-lived (^{90}Sr and ^{137}Cs): near field**
  - **Maximum HLW and SNF temperature**
  - **Maximum WP temperature (package corrosion)**
  - **Disposal drift integrity**
- **Long-lived (Pu, Am, and Cm): far field**
  - **Damage capability of rock to retard radionuclides**
  - **Repository uplift**
  - **Repository hydrology**

Decay Heat From SNF

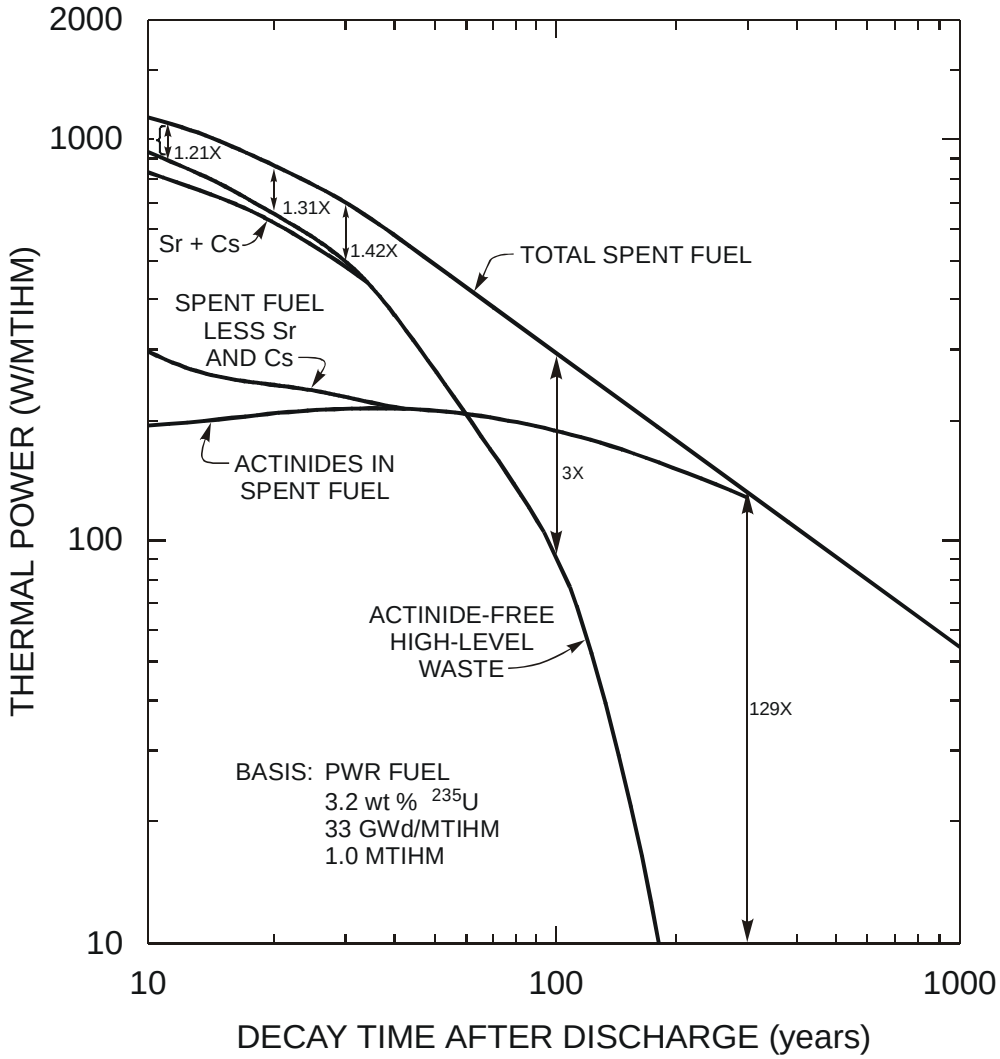

If Repository Cost Or Performance Is To Be Impacted By Changing The Fuel Cycle, Changes In Decay Heat Management Are Required

- **Five HHRs generate the decay heat**
  - **Long-lived (Pu, Am, and Cm)**
  - **Shorter-lived (^{90}Sr and ^{137}Cs)**
- **Partitioning-transmutation (P-T), if successful, will destroy long-lived HHRs**
- **Destruction of long-lived, heat-generating radionuclides removes far-field repository temperature constraints**

Management Of High-Heat Radionuclides Without Long-Lived High-Heat Radionuclides: Design Option I

Extended Ventilation Concept

With P-T High-Heat Wastes, Repository Can Be Ventilated Until Selected Radionuclides ($^{90}Sr/^{137}Cs$) Decay Away

- **Yucca Mountain (YM) is considering cooling WPs for 50 to 300 years because of uncertainties in WP behavior**
  - **Waste package corrosion uncertainties**
  - **Near-field temperature limit**
  - **Far-field temperature limits prevent major reduction in repository size**
- **With P-T, far field constraints removed**
  - **Ventilated design allows repository shrinkage**

Destruction Of Actinides Increases Ventilated Repository Capacity

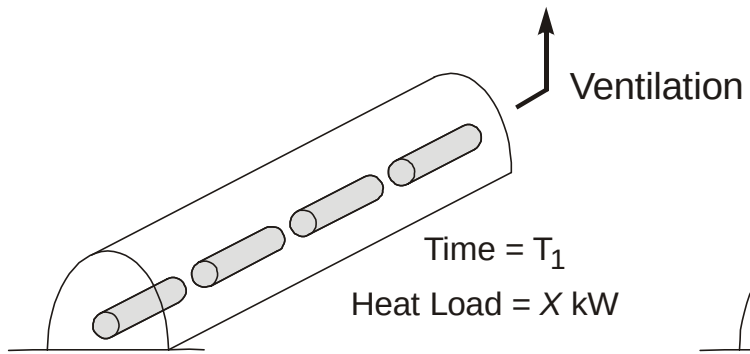

Spent Nuclear Fuel Disposal

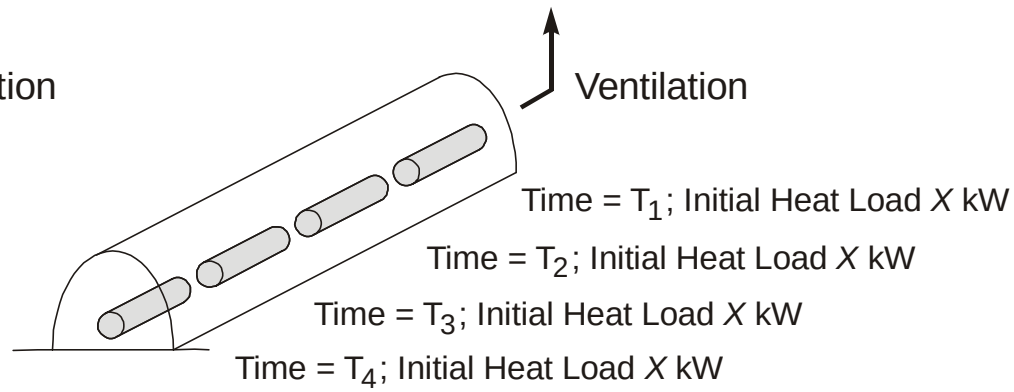

P-T Waste Disposal

Management Of High-Heat Radionuclides Without Long-Lived High-Heat Radionuclides: Design Option II

Separate management of cesium and strontium

Alternative Repository Concept For Low-Actinide (P-T) Wastes

- **Waste is chemically separated into two separate fractions**
  - **HHRs (^{90}Sr and ^{137}Cs)**
  - **Very-low-heat radionuclides (VLHRs)**
- **Design repository with separate sections for disposal of each waste fraction**
- **Use lower-cost, higher-performance disposal methods that are optimized for each waste fraction**

The Properties Of ^{90}Sr And ^{137}Cs Enable The Use Of Low-Cost Disposal Methods

- **Shorter half-lives (~30 years)**
  - **Simplified prediction of long-term behavior**
  - **No expensive long-lived WPs**
- **Small volumes (4.2 kg/t of SNF)**
  - **Package in small capsules**
  - **Low-volume borehole disposal becomes viable**

There Are Many Technologies For Management Of ^{90}Sr And ^{137}Cs

- **Long-term storage**
- **Extended-dry repository (See appendix)**
- **Modified repository**
- **Saltdiver**
- **Rock melt**
- **Borehole**
- **Seabed**
- **Shallow-land disposal**

Separate Management Of ^{90}Sr and ^{137}Cs Has Major Potential Advantages

- **Potential for very-high performance repository using silo disposal for LHR wastes**
  - **Avoid uncertainties created by decay heat in the repository**
  - **Silo performance may exceed conventional WPs for LHRs**
  - **Avoid human intrusion scenario for valuable WP materials**
- **Improved repository economics**
  - **Low-cost ^{90}Sr and ^{137}Cs disposal replace expensive tunnels**
  - **Silos replaces WPs for low-heat wastes**
- **The major repository benefit of P-T may be destruction of long-lived decay heat**

Suggested Path Forward

P–T needs a waste management strategy that shows benefits to the repository but does alter the basic path forward for Yucca Mountain

Strategy For Integrated YM/P-T Program

- **YM is required: program goes forward**
- **Current design**
  - **Required for HLW, non-processed SNF**
  - **YM will be built incrementally over decades**
  - **P-T only impacts latter phases**
- **Three phases (One repository for any size nuclear power economy)**
  - **Phase I: Existing design**
  - **Phase II: Ventilated repository with P-T wastes (expand capacity by *xx*; ventilated concept may be used for SNF)**
  - **Phase III: Separate management of HHRs (expand capacity by *xxxx*)**

The YM Repository Would Be Designed To Accept Long-Lived Radionuclides (Curies) From The Equivalent Of 70,000 MTIHM Of SNF

- **Current YM limit is 70,000 tons SNF**
- **Alternative limit is the long-lived radioactivity from 70,000 tons SNF**
  - **Several options to define equivalence**
  - **Create incentives for accepting alternative**
- **If SNF is processed and long-lived radionuclides destroyed:**
  - **Radioactivity to be disposed of per unit of energy produced is reduced**
  - **Repository capacity (measured in energy produced) is increased**

A Multi-step Approach Is Recommended

- **White paper that identifies waste management options in a P-T system**
- **Review and evaluation of concepts for repository disposal of low-heat wastes**
  - **European experience**
  - **Identification of issues**
  - **Advanced design for high concentrations of long-lived radionuclides**
- **Path forward program plan**

Conclusions

- **P-T creates new options for disposal of radioactive wastes (beyond reduction in radiotoxicity)**
- **An integrated logic is required of the benefits of P-T to repository waste management**
  - **Potential for a single repository for any size nuclear power economy**
  - **Radionuclide destruction to reduce repository impacts to host community (long-lived radionuclide/fissile inventory)**

Added Information

Silo Design

If Waste Volume Controlled Repository Design, Repositories Would Be Small And Cheap

- **The proposed Yucca Mountain (YM) repository is designed to accept:**
  - **Spent nuclear fuel (SNF)**
  - **High-level waste (HLW)**
- **All 70,000 tons of waste could be placed in a cube with dimensions of 30 m on a side**
- **The cost would be less than a billion dollars**

The 70,000 MTIHM Of Spent Nuclear Fuel And High-Level Waste To The Yucca Mountain Repository Could Fit Inside A 30-m Cube

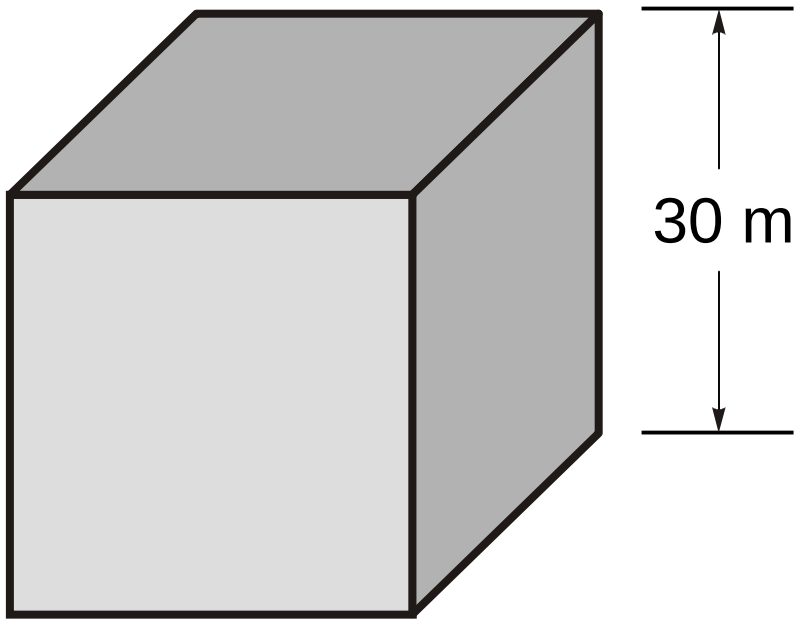

Repository Performance Is Improved If Silos Replace Waste Packages

- **The leaching of radionuclides from wastes is proportional to the water flow though the wastes**
- **Silos per unit waste volume have smaller cross sections to water flow**
- **Reduced water flow per unit of waste may improve repository performance by several orders of magnitude**

The Geometry Of The Waste (Surface-To-Volume Ratio) Strongly Impacts Radionuclide Releases

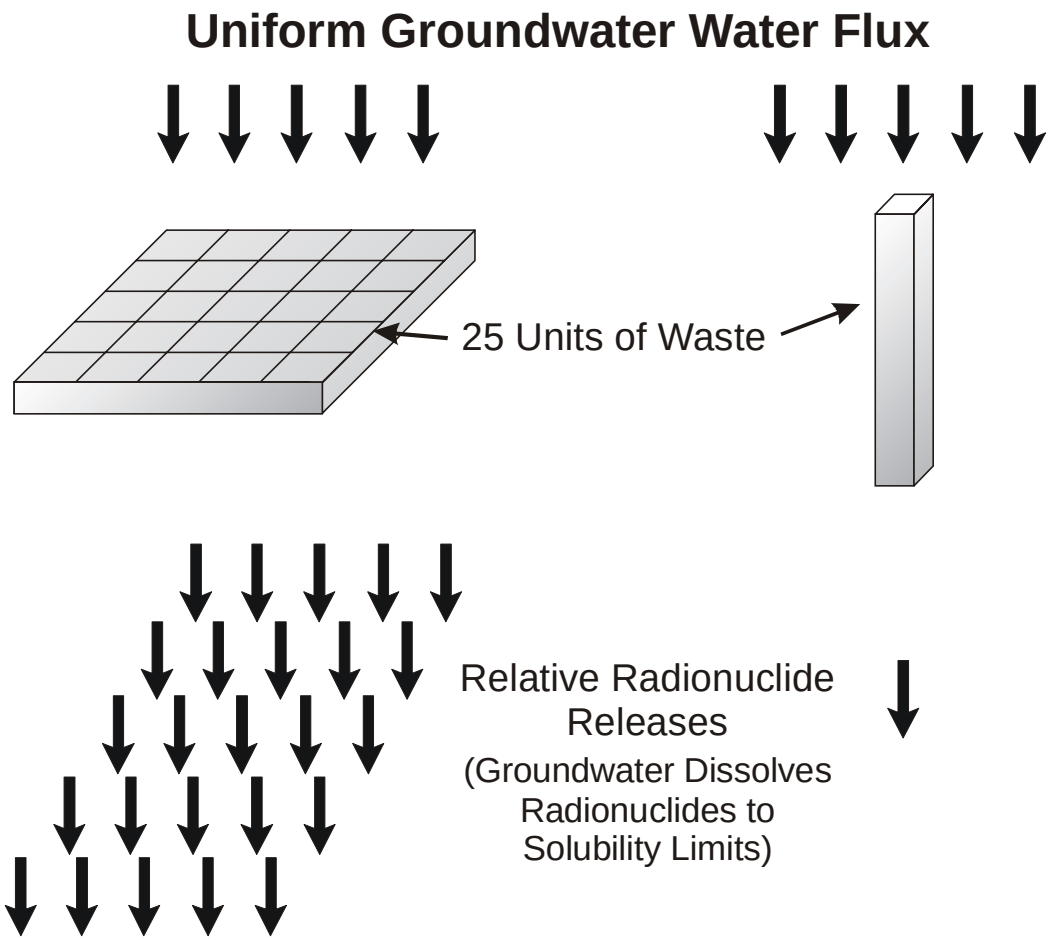

Options Exist For A Very-High Performance Silo System For Wastes With High Concentrations Of Long-lived Radionuclides

- **Large size allows control of local geochemistry**
  - **Maintain chemically reducing conditions within the silo to minimize radionuclide solubility**
  - **Large size compared to SNF WP makes possible long-term chemistry control within the WP**
- **Redox trap for low radionuclide releases**
  - **Some radionuclides soluble under oxidizing conditions; others soluble under reducing conditions**
  - **Silo has reducing conditions; YM has oxidizing conditions**
  - **Radionuclides most soluble under reducing conditions (most likely to escape from silo) trapped by geology**

Extended-Dry Repository Disposal of ^{90}Sr and ^{137}Cs

High Heat Radionuclides (^{90}Sr and ^{137}Cs) Could Be Disposed Of In An Extended-Dry Repository

- **HHRs could be placed in long, horizontal boreholes**
- **Boreholes could be placed close together**
- **Decay heat raises temperatures above boiling point of water for millennia**
- **No radionuclide transport occurs if there is no liquid water to transport radionuclides**
- **HHRs decay completely before cool-down of the large mass of rock**
- **Low-cost boreholes replace expensive tunnels**
- **Small area (need concentrated decay heat)**

In An Extended-Dry HHR (^{90}Sr and ^{137}Cs) Repository, Boreholes (Rather Than Tunnels) Used To Distribute Decay Heat Load

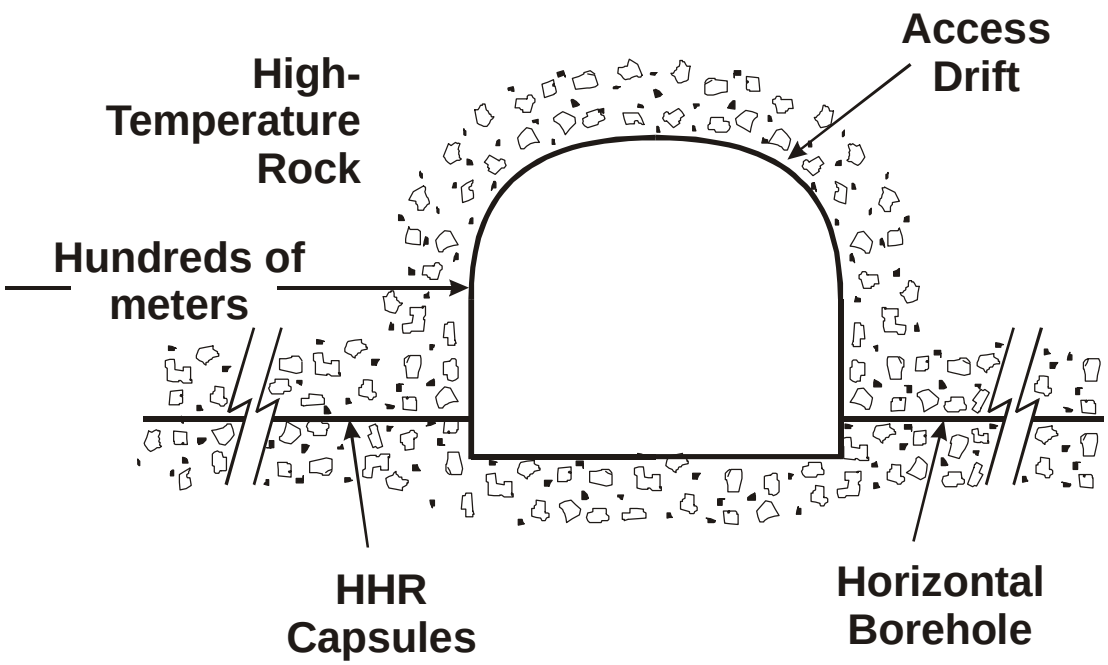

In Repositories Above The Water Table, The Extended-Dry Repository Concept Creates A "Hydrothermal Umbrella" Over The HHRs And Diverts Water

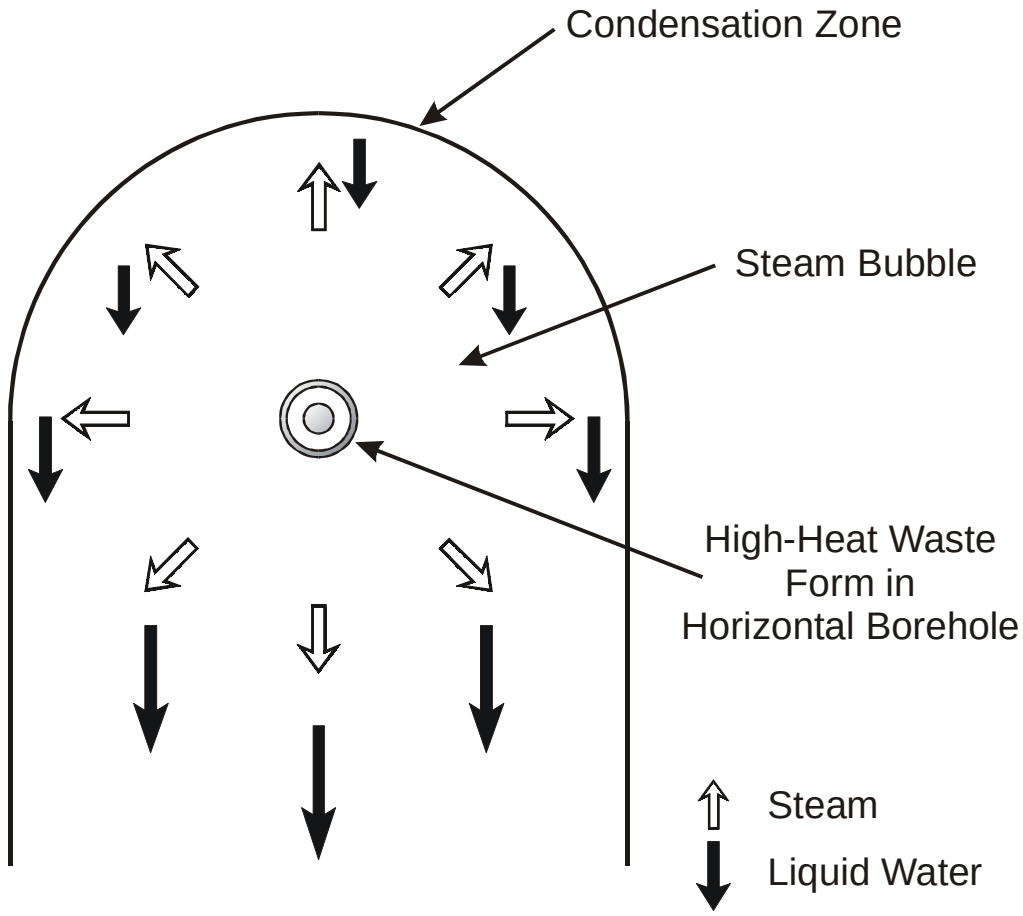

Extended Dry Repository Investigated In Detail By YM For SNF

- **Heat pulse lasted 5000 to 10,000 years**
  - **Excellent isolation for high-heat time period**
  - **Cesium and strontium provided most of the heat**
- **Concept rejected for SNF**
  - **Heat changes behavior of the geology**
  - **Difficult to predict behavior after rock cool down**
- **Basis for rejection not apply to radionuclides that decay away faster than the heat pulse**