Modification of an Ion Trap for Real-Time Trapping of Nanoparticles Megadalton and Beyond

Peter T. A. Reilly, Ryan P. Rodgers, William B. Whitten, and J. Michael Ramsey
Oak Ridge National Lab, P.O. Box 2008, Oak Ridge, TN 37831-6142

There is a growing need to be able perform mass spectrometric analysis on larger and larger mass species that primarily has been driven by the biochemical/biomedical revolution. Though ion trap technology has come a long way in meeting the need for larger and larger mass analysis, they are still limited because they have been optimized for trapping small molecular ions (>1 KDa) by setting the trap frequency to approximately 1 MHz. Lowering the trapping frequency substantially increases the limit in the mass to charge ratio of the species that can be trapped. Historically, one of the first uses of the Paul trap was the implementation of a 60 Hz field to trap micrometer-sized particles of aluminum (~10^{12}-10^{15} Da). Consequently, there is no real theoretical mass limit for trapping with a Paul trap. However, there is a practical mass limit.

Expansion from atmospheric pressure into vacuum imparts kinetic energy into the expanding species that is mass dependent. The kinetic energy of large species entering the vacuum system can be much larger than the trapping potential. The trick to real-time trapping of extremely high-mass species (megadalton and beyond) is slowing them down so that their kinetic energy is near enough to zero so that they may lose enough translational energy through collisions with a buffer gas to become trapped in the potential energy well.

Thermalization of the translational energy distribution of the high mass species or particles can be accomplished by expansion into a stagnant gas or by using a reflected shock wave. The dynamics of this process are of course dependent on the pressure in the expansion region and the mass of the particle. Further reduction of the kinetic energy can be accomplished by biasing the entire trap with a DC potential.

An audio frequency potential can be applied to the endcap electrodes setting up a trapping field between the end caps and the ring. The audio frequency field can be superimposed on the ~1 MHz field without affecting the trapping of the large mass species. Low mass species will not be trapped while the audio field is applied. Collisions with a buffer gas cause the high mass species to settle into the center of the trap. Particle(s) analysis can then be done by dropping the audio trapping field and subsequently ablating the translationally cooled particle(s) with a pulsed laser. The ablated ions are then mass analyzed by standard techniques.

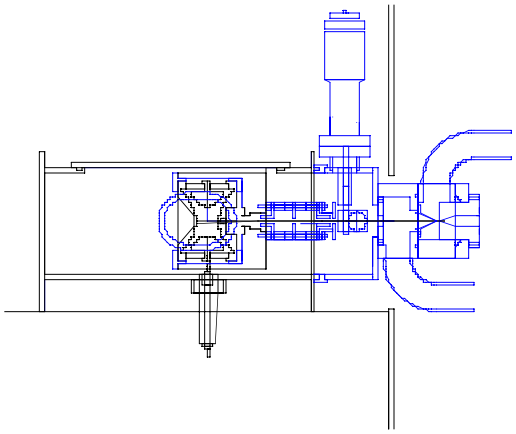

A Varian Saturn 2000 ion trap was adapted with a differentially-pumped atmospheric inlet (see right hand figure). Modifications were made to permit the application of an 800 V variable frequency

potential (0-100 KHz) to the endcap electrodes to trap the high mass species. Interface electronics were designed and built to allow the trapping electronics to operate with the Saturn electronics and software. (See the block diagram on the right.)

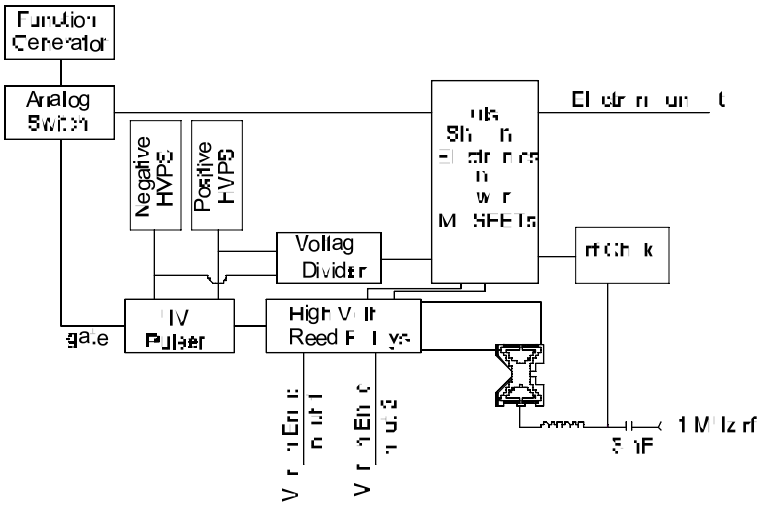

A monodispersed beam of singularly charged 12-14 nm particles were created from a diesel engine by passing the diluted exhaust through a commercial differential mobility analyzer (DMA). Upon exiting the DMA, the particles were fed into the inlet of our mass spectrometer.

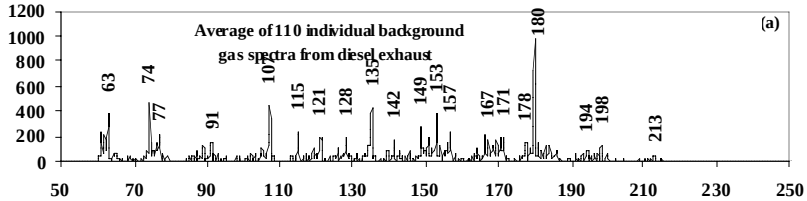

On the right, in spectrum (a), is the average of 110 spectra without the any trapping voltages applied to the ion trap. There is a significant background that arises from the gas phase species in diluted exhaust. Spectrum (b) is another average of 110 spectra measured with an 800 V, 14 KHz trapping potential applied to the endcap electrodes.

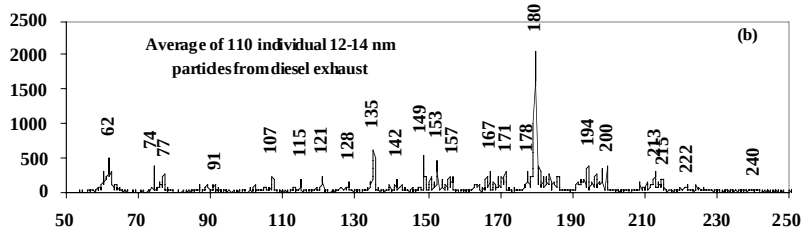

Application of the particle trapping potential increased the overall signal intensity by a factor of two. Subtraction of spectrum (a) from (b) yields the averaged spectrum of the 12-14 nm exhaust particles. This spectrum looks striking similar to the spectra micron-size particles created by 700 °C pyrolysis of acetylene. This suggests that these particles were created by low temperature pyrolysis of the exhaust gases after they exit the engine.

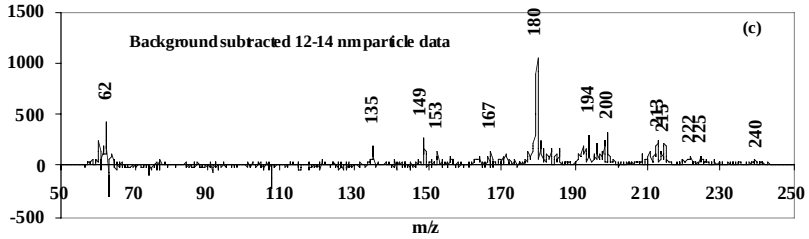

The above evidence demonstrates that it is possible to trap species in and above the megadalton mass range using an ion trap. It is conceivable that other ion trap

manipulations such as tandem mass spectrometry that are now routine in the low mass range are also possible in an ion trap on extremely large species such as DNA.