SMCia/01
IEEE Mountain Workshop on Soft Computing in Industrial Applications
Virginia Tech, Blacksburg Virginia, June 25-27, 2001

Wavelet And Wavelet-Packet Analysis Of Lamb Wave Signatures In Real-Time Instrumentation

Stephen W. Kercel*[a], Marvin B. Klein[b], Bruno Pouet[b]
[a]Oak Ridge National Laboratory, P.O. Box 2008, Oak Ridge, TN 37831-6007
[b]Lasson Technologies, 6059 Bristol Parkway, Culver City, CA 90230

Abstract - A persistent problem in the analysis of Lamb wave signatures in experimental data is the fact that several different modes appear simultaneously in the signal. The modes overlap in both frequency and time domains. Attempts to separate the overlapping Lamb wave signatures by conventional signal processing methods have been unsatisfactory. As might be expected, the transient nature of Lamb waves makes them readily tractable to wavelet analysis. The authors have used the discrete wavelet transform and the wavelet packet transform to untangle the Lamb wave signature. Furthermore, both techniques are realizable in the highly parallel cascaded-lattice architecture, and are well suited for on-line real-time instrumentation. For signatures of Lamb waves captured in laser ultrasonic data in tailor-welded blanks, this has led to straightforward detection of weld defects and demonstration of principle that weld defects can be classified according to the type of defect as revealed by features in wavelet space.

This technique has considerable commercial value for on-line monitoring of manufacturing processes. For example, laser-based ultrasonic (LBU) measurement shows great promise for on-line monitoring of weld quality in tailor-welded blanks. Tailor-welded blanks are steel blanks made from plates of differing thickness and/or properties butt-welded together; they are used in automobile manufacturing to produce body, frame, and closure panels. LBU uses a pulsed laser to generate the ultrasound and a continuous wave (CW) laser interferometer to detect the ultrasound at the point of interrogation to perform ultrasonic inspection. LBU enables in-process measurements since there is no sensor contact or near-contact with the workpiece. The authors are using laser-generated plate (Lamb) waves to propagate from one plate into the weld nugget as a means of detecting defects.

I. Introduction

An Orthogonal Transient Basis

In many measurement problems, including those involving the observation of ultrasonic waves propagating in industrial workpieces, the signals being observed are oscillating bursts. This suggests that wavelet analysis might yield high performance in an on-line instrument. The wavelet basis function is an oscillating burst, and the observed signal may be represented very compactly, since it is very similar to the basis function. Furthermore, it is easy to implement in real-time hardware; the discrete wavelet transform is implemented as a bank of computationally inexpensive finite impulse response (FIR) digital filters.

This strategy is of particular importance in the Non-destructive Evaluation (NDE) community. Typically, the analysis of NDE signals consists of performing a Fourier analysis on the time-series data, and hoping that something useful appears in the spectrum. Sometimes it works, but often the results are disappointing. Resolving a finite burst into an infinite sum of infinitely long signals seems to be a very awkward approach to trying to understand what information the signal is conveying. Our work with laser-ultrasonic Lamb waves demonstrates that the discrete wavelet provides a powerful method of analyzing transient signatures in industrial applications.

The idea behind wavelet analysis is that the signal can be considered as the weighted-sum of overlapping wavelet functions [1]. In fact, any signal of finite bandwidth and finite duration can be completely characterized as a weighted-sum of a finite number of scaled and shifted versions of the underlying wavelet. The concept is similar to Fourier analysis, in which the time series signal can be considered a weighted-sum of sinusoids at various frequencies, with the transform coefficients being the weights. The practical meaning of the wavelet transform of a signal is that each coefficient of the transform is the weight, or relative amount of information (or signal energy) the wavelet at that particular value of scale and shift contributes to the overall signal.

For many of the results reported in this paper, the wavelet analysis was performed with the Daubechies 10-coefficient least asymmetric discrete wavelet [2]. Discrete wavelets are not expressible in closed form. Plots of the wavelet and its corresponding scaling function were computed with Daubechies cascade algorithm, and are shown in Fig. 1.

* Correspondence: Email: kercelsw@ornl.gov; Telephone: 865-574-5278; Fax: 865-574-0431.

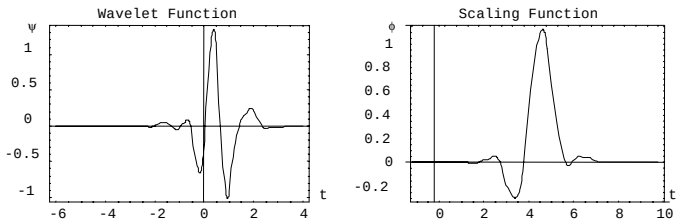

Fig. 1. Wavelet and scaling functions for 10-coefficient least asymmetric wavelet.

Suppose that a time-domain input consists of a list of 960 evenly-spaced samples of a band-limited signal. The discrete wavelet analysis results in a list of 960 wavelet-domain coefficients output in response to each 960-element time series input signal. As sinusoids at different frequencies are orthogonal to each other, so also are scaled and translated versions of these wavelet functions orthogonal to each other. This means that Parseval's theorem holds for discrete wavelet transform; the amount of energy in the signal in the wavelet domain is exactly the same as the amount of energy in the signal in time domain.

The discrete wavelet packet transform is a generalization of the discrete wavelet transform. As shown in Fig. 2, each stage of both the wavelet transform and the wavelet packet transform consists of an elemental pair of filters (high-pass and low-pass) that splits the input signal into two decimated orthogonal components. The low-pass output is an approximation of the input signal. The high-pass output contains the details of the input signal that are missing from the approximation. There is no information in the two outputs that overlaps, and nothing is lost. The input signal can be exactly reconstructed from the two outputs.

The discrete wavelet transform is implemented by cascading the elemental filter pairs as shown in Fig. 3, and the wavelet packet is implemented by cascading them as shown in Fig. 4. In the wavelet transform configuration, the low-pass output of the preceding stage is fed into an identical copy of the elemental filter pair. Thus the first approximation is further approximated, and the second set of details consists of the information present in the first approximation but absent from the second. In wavelet parlance, the output of the first high-pass filter is the set of wavelet transform coefficients of the input signal at the finest scale.

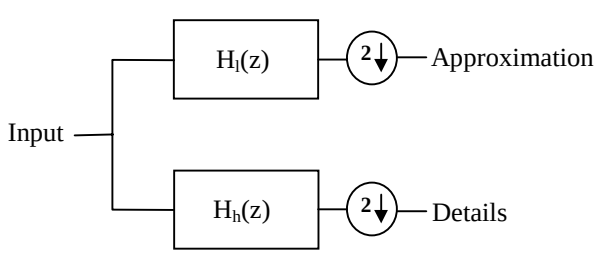

Fig. 2. Elemental filter pair

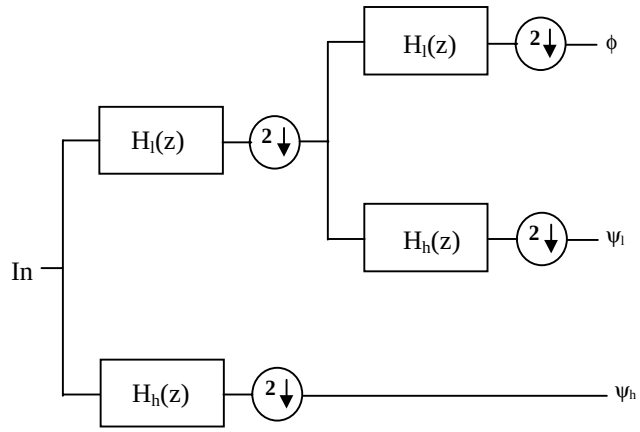

Fig. 3. Implementation of the discrete wavelet transform

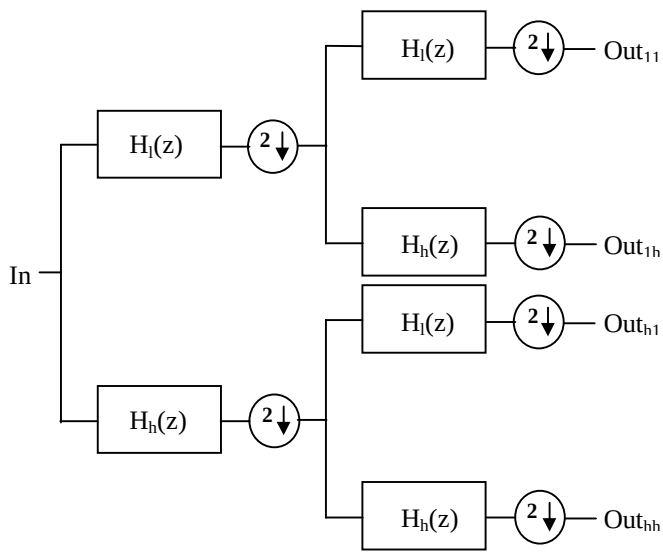

Fig. 4. Implementation of the wavelet packet transform

The output of the next high-pass filter is the set of wavelet transform coefficients of the input signal at the next finer scale. The output of the final low-pass filter is the set of scaling function coefficients. The cascade can be repeated as often as necessary, and all the outputs are orthogonal.

There is no fundamental reason why the high-pass output of the elemental filter pair cannot be split as well, and nothing to prevent repeating this process as often as necessary. A filter bank in which at least some of the high-pass outputs are split into other approximations and details implements the wavelet packet transform [3]. If the high-pass output is split whenever the low-pass output is split, then the system is a complete wavelet packet transform. However, it is not necessary for the wavelet packet to be complete. A more efficient representation of the signal may be obtained by leaving out some of the filter pairs in the cascade. Irrespective of how many filter pairs are included, all outputs remain orthogonal.

For any given input signal, there is an optimal configuration of filter pairs that represents most of the input signal information with the fewest output coefficients. This is known as the best basis wavelet packet. The “best basis” is determined by finding the configuration of filter pairs whose output has the highest entropy [4].

Energy is regarded as proportional to the information in the signal. Suppose that a signal’s energy consists of three major elements. In addition to the energy of the desired signal, there may be coherent or non-random signals produced as undesired, but unavoidable biasing artifacts due to the hardware. Also, there may be broadband high-frequency energy that is typically regarded as random noise. If these three energies are separable in wavelet space, then the undesired bias and noise components of the sensor output signal can be identified and subtracted from the original sensor output. What remains is the signal of interest with its features unobscured.

This version of the wavelet transform takes a one-dimensional, time-domain signal and projects it into a two-dimensional domain. One is a shift dimension, corresponding superficially to time. The other is a scale dimension, corresponding superficially to inverse frequency. In practice, the energy in the Lamb wave signature is concentrated in three distinct regions along the scale dimension. There is a high-energy bias, corresponding to natural responses of the experimental apparatus. The bias is concentrated in the coarse scales, and does not change between trials. There is low-energy noise, corresponding to the Johnson noise in the detector and receiver, and similar mechanisms. Although the noise occurs across all scales, the energy in the finest wavelet scales is dominated by noise. The information of interest tends to be concentrated in the middle scales and to have mid-range intensity. Due to the orthogonality of the discrete wavelet, coefficients that are known to correspond to bias or noise can be subtracted from the observed data without disturbing information in the signal.

II. Cumulative Energy

The effectiveness of several transforms was compared by taking the same list of 960 numbers (generated by a laser ultrasonic sensor), and producing an output list of 960 numbers. In each output list, there are relatively few big numbers, and most of the rest are close to zero. The useful information is in the few big numbers, and the others can be zeroed out without much loss of information. For each transform output data set, the cumulative energy function counts up the cumulative energy in the output coefficients as energy is accumulated by counting energies, starting from the energy of the greatest transform coefficient, and moving to the smallest.

For illustration, we have computed the normalized cumulative energy of the wavelet packet transform, the discrete wavelet transform, and the discrete Fourier transform of the same signal from a laser ultrasonic sensor. Fig. 5 shows a plot of the first 200 members of the cumulative energy lists for three transforms. For the output of the “best basis” wavelet packet transform, virtually all of the information is contained in the biggest 135 members. The other 825 members are very close to zero. Also shown in Fig. 5 is the cumulative energy for the discrete wavelet transform, using the same input signal, and the same elemental filter pair (Daubechies least asymmetric 10-coefficient filter and its paraunitary companion). The other plot in Fig. 5 is for the Fourier transform; it is clearly far less effective than the other two at compressing the signal. The “best basis” wavelet-packet transform is only marginally superior to the wavelet transform for this data set, and not worth the added computational cost compared to the wavelet transform.

III. Donoho Denoising

Energy compression is also the basis for Donoho denoising [5]. Donoho says that for a wavelet transform of a noisy signal, the big coefficients hold the information and the small coefficients hold the noise. Since the wavelet compresses the information, a signal spread out in the time domain will be very compactly represented in the wavelet domain. On the other hand, noise is approximately evenly randomly distributed throughout both the wavelet and the time domains. Suppose we try to denoise with the best basis wavelet packet, by declaring that the biggest coefficients holding 90% of the total energy of the signal constitute the "information." In the upper plot of Fig. 6, the jagged line is the original time series. The smooth line is constructed by taking the wavelet packet transform and identifying and retaining the 9 coefficients that hold 90% of the energy in transform space, and zeroing-out the 951 coefficients that contain the other 10% of the energy. The “denoised” time series is recovered by taking the inverse wavelet packet transform of the zeroed-out list. Suppose we try to denoise with the best basis wavelet packet, by declaring that the biggest coefficients holding 98% of the total energy of the signal constitute the “information.” The results are seen in the lower plot in Fig. 6.

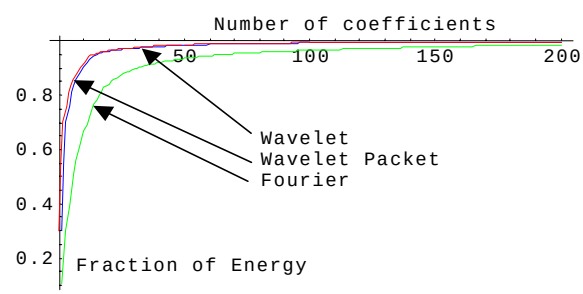

Fig. 5 Cumulative Energy

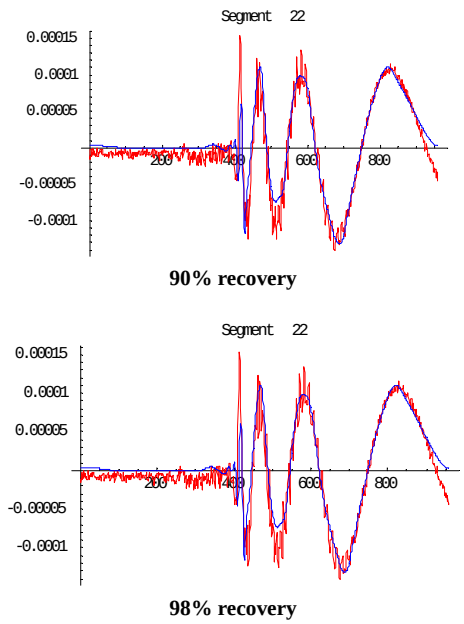

Fig. 6. Denoising a laser ultrasonic signal

The next 26 coefficients contribute mostly noise. It is noted that the high frequency features of the time domain signal are mostly preserved (unlike the more traditional method of denoising by low-pass filtering), but noise is substantially reduced.

IV. Why Does This Matter?

This matters because we can use it to find features of flaws as illustrated in Fig. 7. In Fig. 7a the wavelet transform was computed for each of 30 signals. In wavelet space, the largest coefficients containing the first 99.99% of the signal energies were retained, and the others zeroed out. Then each zeroed-out set was inverse wavelet transformed to recover the approximate time series. Then each time series was subtracted from the corresponding original time series. The resulting residuals are plotted below as a density plot. The vertical axis corresponds to the 30 spatial locations on the workpiece from which the 30 time series were collected. The horizontal axis corresponds to time. The gray level is strength. The residuals are mostly noise. In wavelet space, the 8 largest coefficients (containing 95-96% of the signal energies) were retained, and the others zeroed out. Then each zeroed-out set was inverse wavelet transformed to recover the time series. Then each time series was subtracted from the corresponding original time series. The resulting 4-5% residuals are contour-plotted below in Fig. 7b. In the same wavelet space, the 9 largest coefficients (containing 96-97% of the signal energies) were retained, and the others zeroed out. Then each zeroed-out set was inverse wavelet transformed to recover the approximate time series. Then each time series was subtracted from the corresponding original time series. The resulting 3-4% residuals are contour-plotted in Fig. 7c. Note that there is a little difference between Fig. 7b and Fig. 7c.

The reasonable place to search for features of weld defects is in the region of the signal between the bias (biggest eight coefficients of each signal, or thereabouts) and the noise (smallest 900 coefficients of each signal). In Fig. 7d, 97.6% of the signal energy is assumed to be attributed to biasing effects. This bias is subtracted from the signal approximation constructed from the wavelet coefficients constituting of 97.8%, of the signal energy. This difference constitutes 1.2% of the original signal energy, and has a fairly dramatic global minimum whose contour is plotted in Fig. 7d. This shows up in scan 14, and time 750. This corresponds to a pinhole defect in the weld in the workpiece.

This technique has considerable commercial value for signal processing in sensors used in on-line monitoring of manufacturing processes. The above example, comes from our research in the manufacture of welded panels for auto bodies. For the process to yield a useful product, the quality of welds must be closely monitored. Laser ultrasonics provides a solution to the monitoring problem, and wavelet analysis makes it practical to use the system in real-time.

V. Conclusions and Further Research

The authors have detected various kinds of weld flaws in assorted specimens of tailor-welded blanks using the methods described in this paper [6]. These results demonstrate capability to detect localized weld defects using a computationally efficient algorithm that can be implemented inexpensively in real-time.

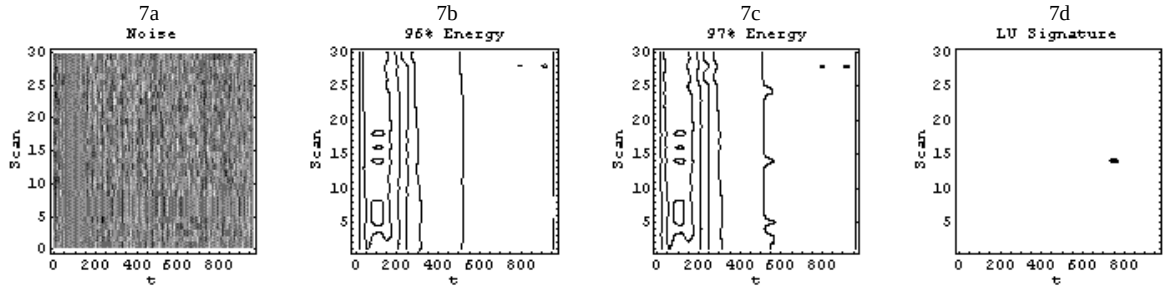

Fig. 7. Separation of Singal Energies by Wavelets

ACKNOWLEDGMENT

We gratefully acknowledge the helpful review and comments of Roger Kisner and Glen Allgood of ORNL Instrumentation and Controls Division. ER-LTR CRADA ORNL 98-0524 sponsored this collaboration between Lasson Technologies, TWB, Inc., and Oak Ridge National Laboratory, managed and operated by UT Battelle for the U.S. Department of Energy under Contract No. DE-AC05-96OR2246.

REFERENCES

[1] S. W. Kercel, "A Near-Real-Time Instrument for Wideband Magnetic Field Monitoring with Simultaneous Time and Frequency Localization by Multiresolution Filter Bank," *UMI*, Ann Arbor, 1996, pp. 109–113

[2] I. Daubechies, "Ten Lectures on Wavelets," *Society for Industrial and Applied Mathematics*, Philadelphia, 1992, pp. 199–209

[3] M.V. Wickerhauser, "Adapted Wavelet Analysis from Theory to Software," A .K. Peters, Ltd., Wellesley, 1994, pp. 237-256.

[4] *Ibid*., pp. 274-281.

[5] D. Donoho, "De-noising by Soft-thresholding," *Technical Report*, Department of Statistics, Stanford University, 1992.

[6] S. W. Kercel, M. B. Klein and B. Pouet, *In-Process Detection of Weld defects Using Laser-Based Ultrasonic Lamb Waves*, ORNL/TM-2000/346, Oak Ridge, 2000