Depleted Uranium Dioxide as SNF Waste Package Particulate Fill: Engineering Properties

Charles W. Forsberg

Steve N. Storch

Kenneth W. Childs

Oak Ridge National Laboratory
P.O. Box 2008; Oak Ridge, TN 37831-6180
Tel: (865) 574-6783; E-mail: forsbergcw@ornl.gov

Session: Engineered Barrier System II
9th International High-Level Radioactive Waste Management Conference
Las Vegas, Nevada
May 2, 2001

The submitted manuscript has been authored by a contractor of the U.S. Government under contract DE-AC05-00OR22725. Accordingly, the U.S. Government retains a nonexclusive, royalty-free license to publish or reproduce the published form of this contribution, or allow others to do so, for U.S. Government purposes. File name: DUO2fill.HLW01.Properties.

Outline

- **Concept description**
- **Benefits of using DUO_2 fill**
- **Engineering properties**
  - **Fill properties and techniques**
  - **Thermal conductivity**
- **Conclusions**

Waste Package (WP) Loading Sequence

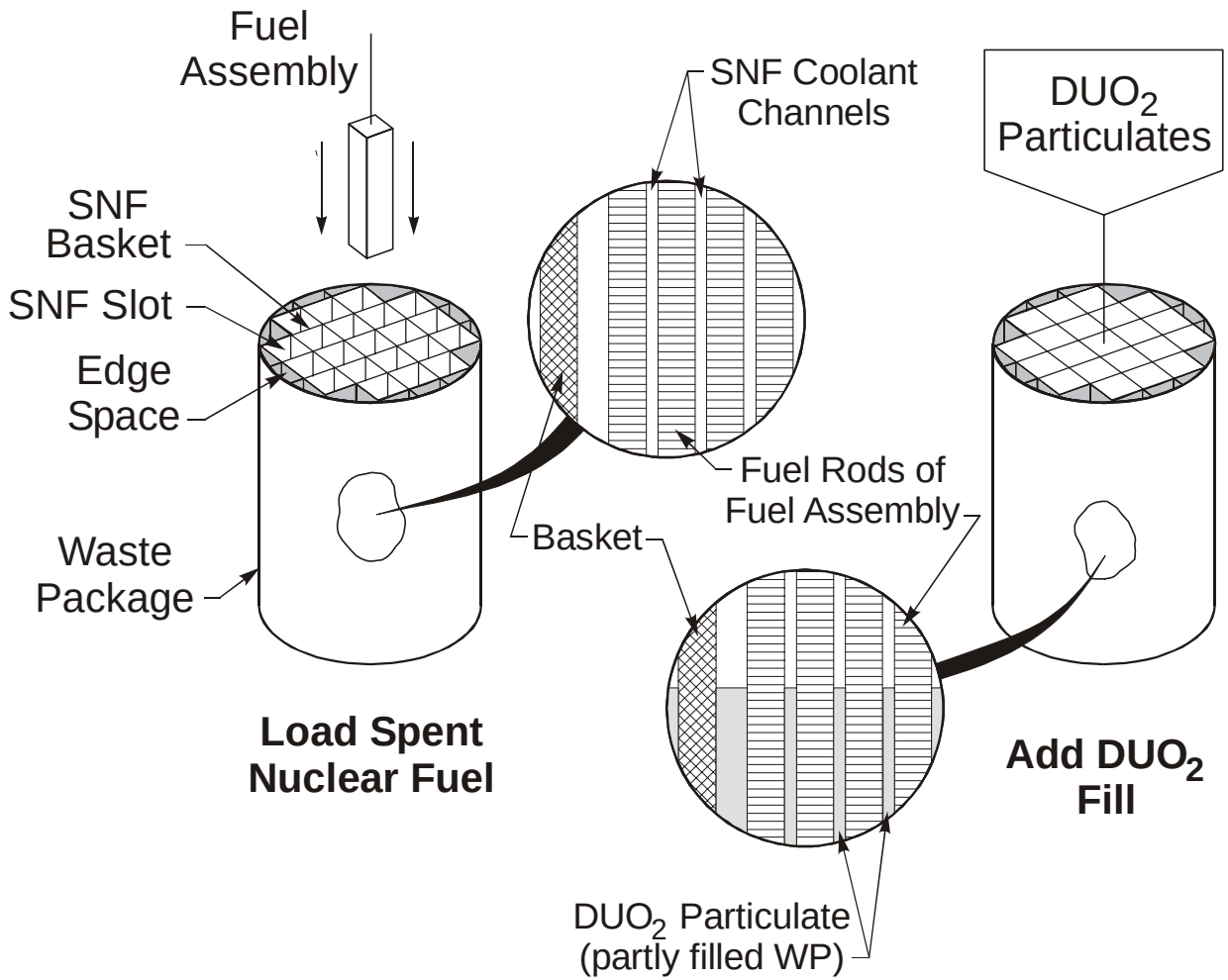

Yucca Mountain Waste Package System

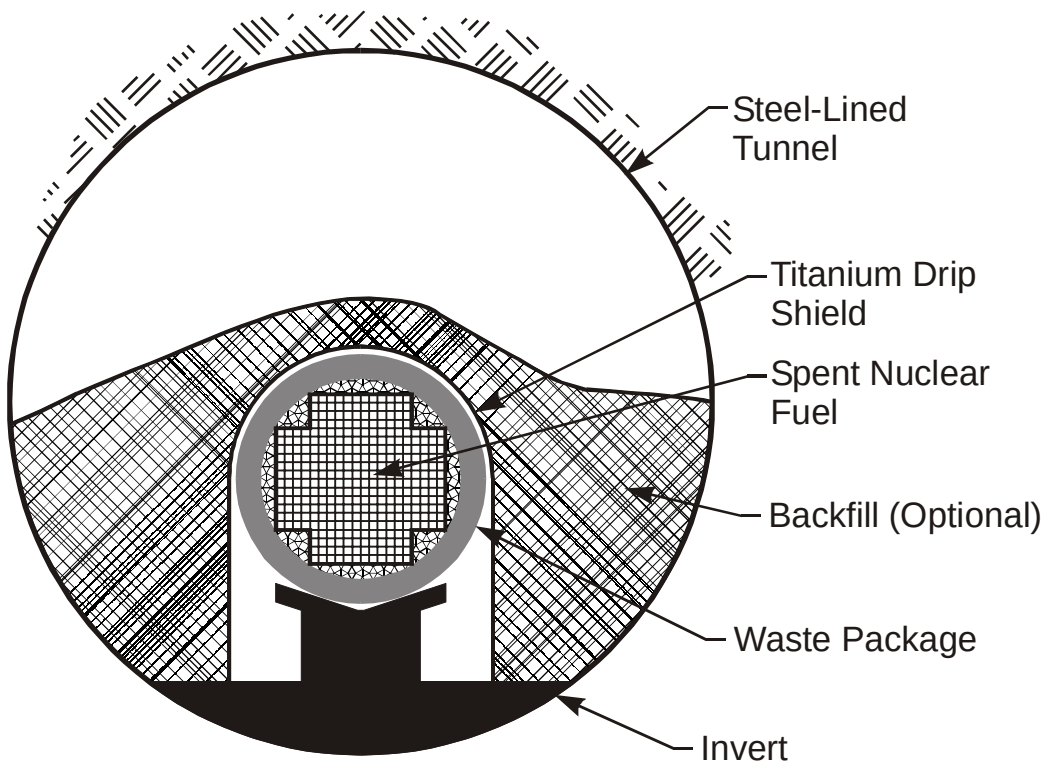

Yucca Mountain (YM) Repository

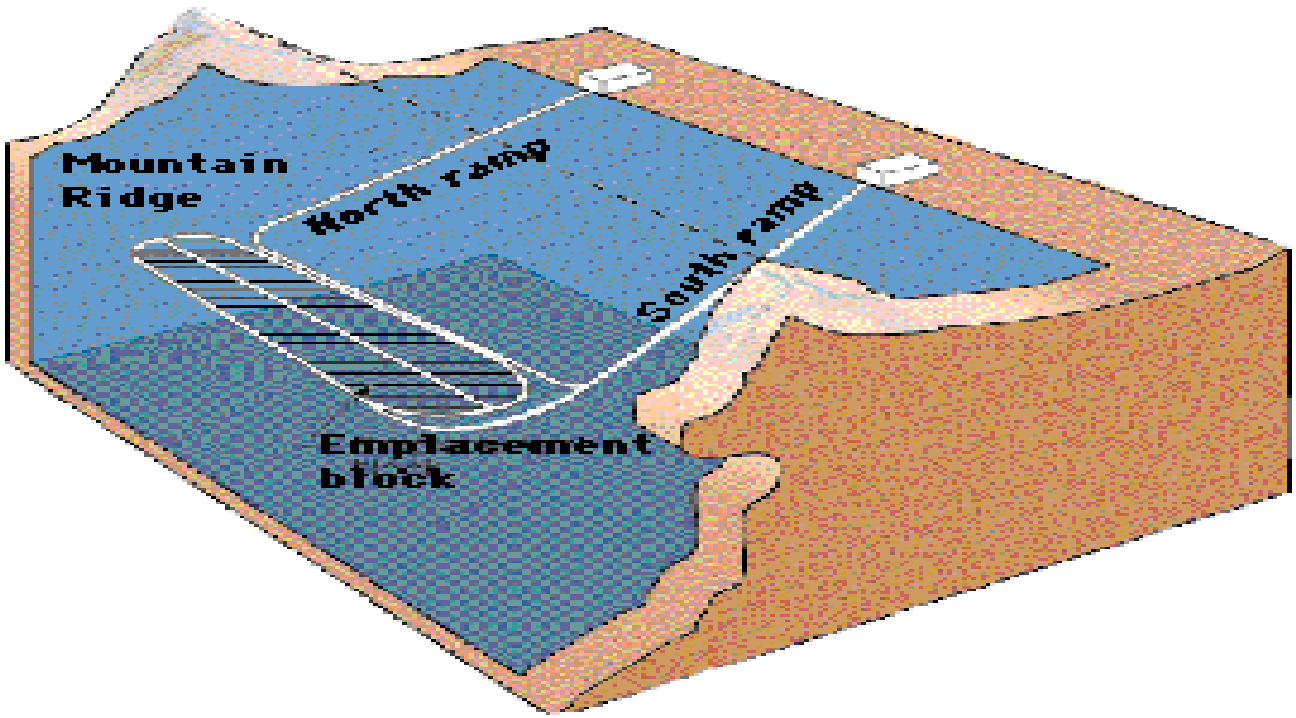

Benefits of Using DUO_2

There Are Four Potential Benefits of Using DUO_2 in a Repository WP

- **Reduce potential for long-term nuclear criticality in the repository**
- **Reduce radionuclide release rates from SNF WPs**
- **Provide WP shielding**
- **Dispose of excess DU (one-half or more of the inventory)**

Nature Has Created Nuclear Reactors When the Fissile Assay Exceeds 1.3 wt % ^{235}U Equivalent

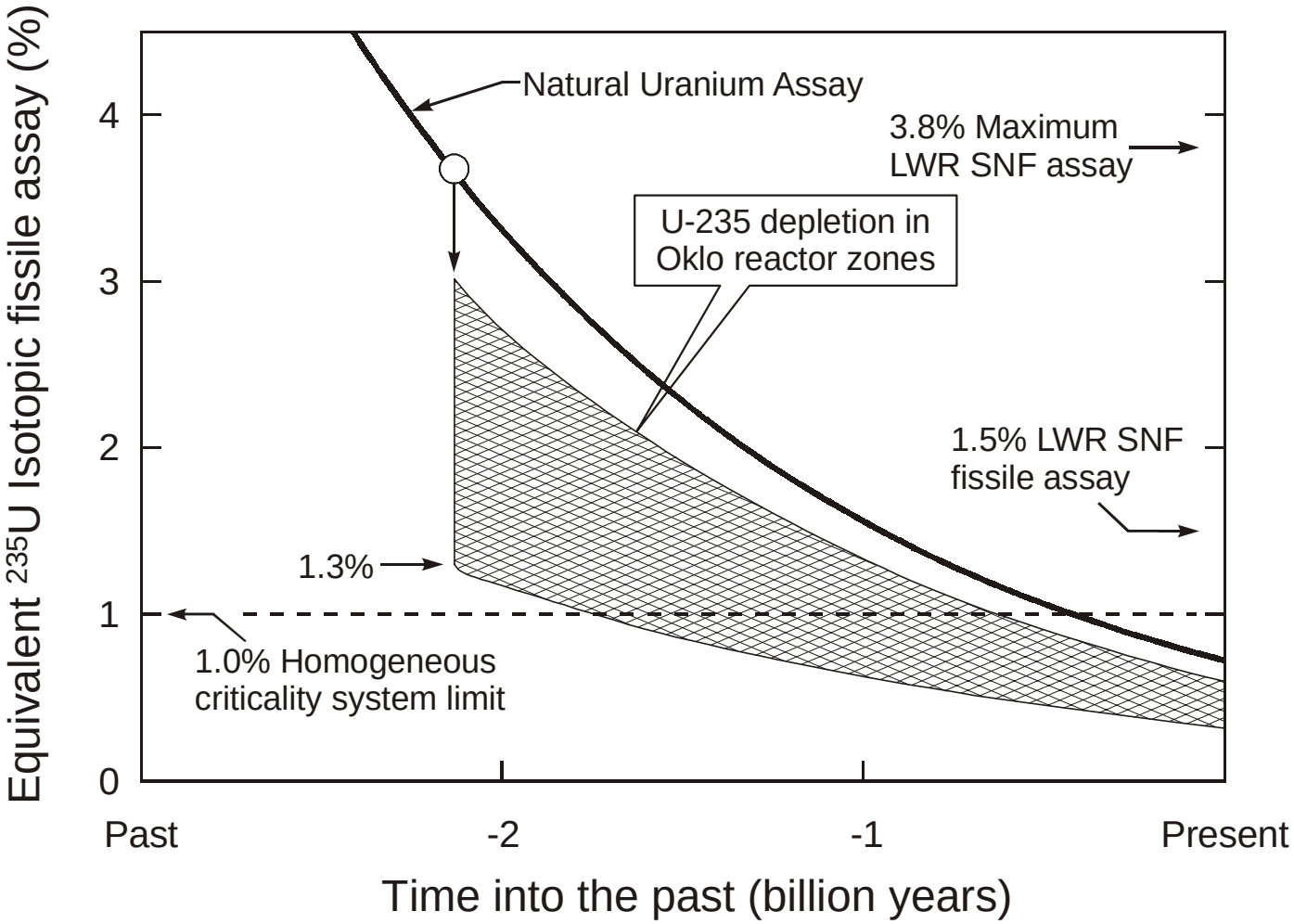

Some Uranium Ore Deposits Have Remained Intact for Millions of Years: The Same Mechanisms May Protect SNF with DUO_2 Fill

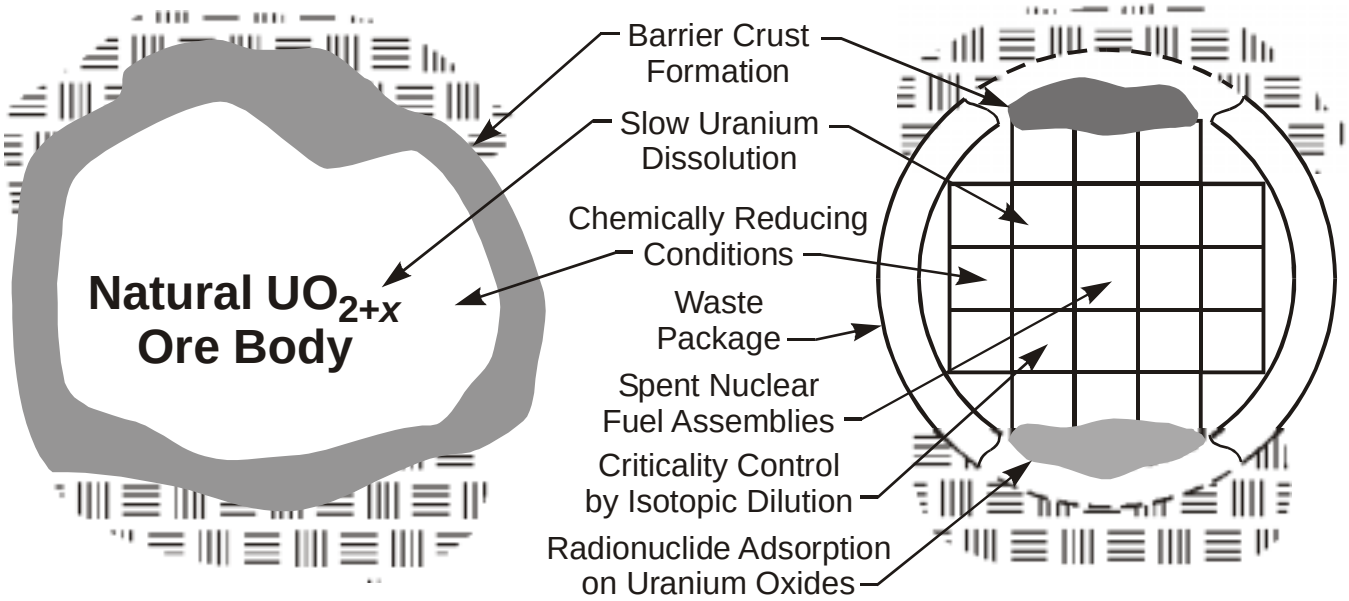

DUO_2 Fill Could Consume Half or More of the 600,000 Tons of Excess DU

Several Engineering Issues Must Be Addressed If DUO_2 Fill Is To Be Used

- **Can the WP be efficiently filled?**
- **What is the temperature impact on the SNF?**
  - **Repository temperature limit for SNF is 350ºC**
  - **Limit is defined by long-term clad degradation**

The YM Project Demonstrated the Filling of Dummy SNF Assemblies with Steel Shot

- **Steel shot and DUO_2 have somewhat similar densities**
  - **Steel: 7.9 g/cm^3**
  - **DUO_2: 10.9 g/cm^3**
- **Assemblies successfully loaded and unloaded (recovery possible)**
- **Limited number of tests**

Fill Experiments Using Steel Shots

Dummy PWR Fuel Assembly Partly Filled with Steel Shot

The Canadian Repository Program Conducted Large-Scale Experiments To Demonstrate Fill Technology

- **Canada proposed a thin-wall titanium WP**
  - **Outstanding corrosion resistance**
  - **Expensive material: use thin-wall WP**
  - **Fill to be added to support WP against crushing**
- **Investigated many fills**
  - **DUO_2 not investigated because it was not available (no depleted uranium in Canada)**
  - **Filling and emptying technology investigated**
- **Full-scale WP testing with fill**

Fills Provide Internal Support That Delays WP Collapse with Loss of Barriers Against Groundwater Contact with SNF

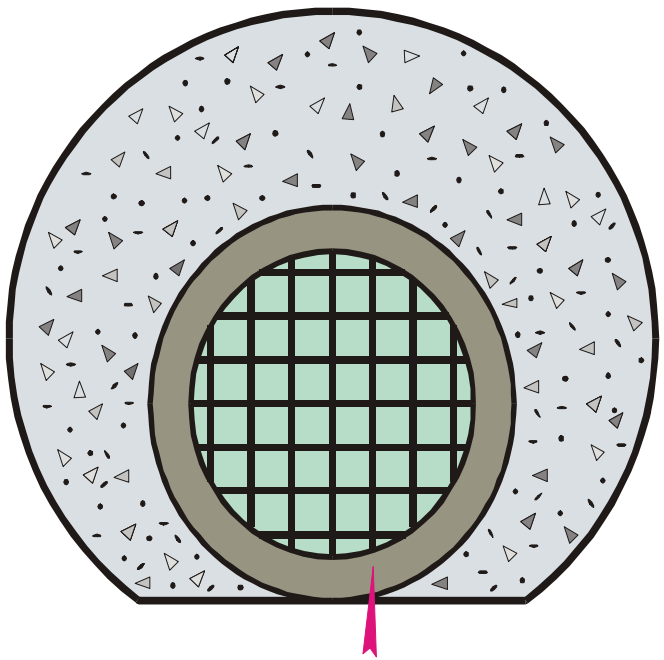

Intact Waste Package
or Waste Package with Fill
(High Resistance to Collapse)

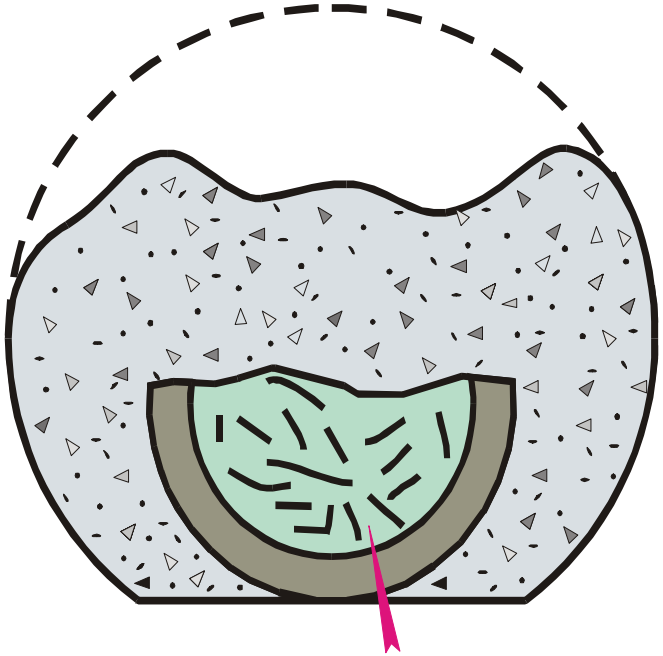

Failed Waste Package
(Collapse With No
Internal Support)

Canadian Thin-Wall (0.635-cm) WP for CANDU SNF

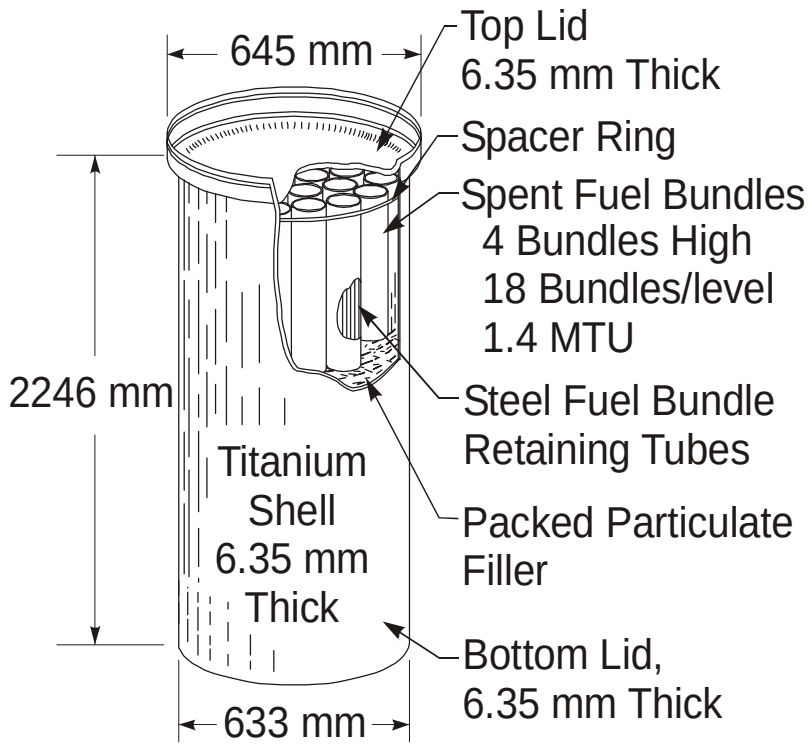

Canister Concept

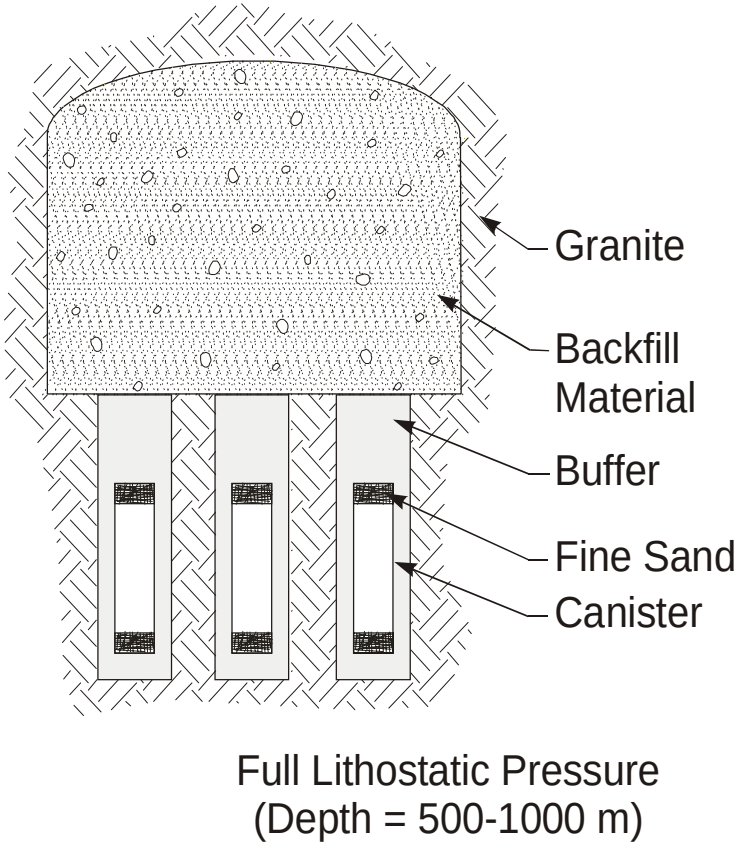

Repository Disposal Concept

Canadian WP with Fill and Dummy SNF

(Courtesy of AECL)

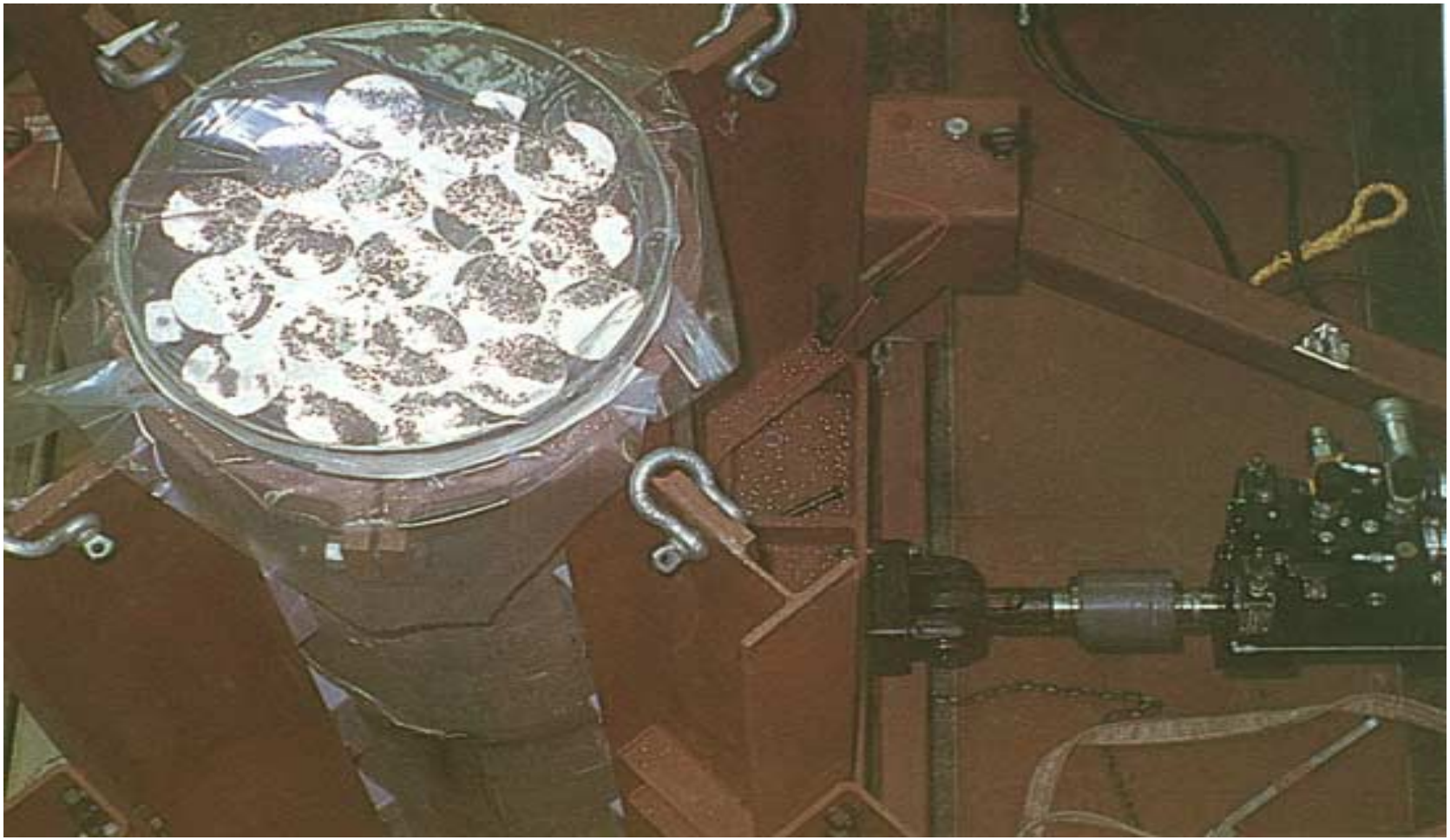

Welding of Canadian WP (Courtesy of AECL)

Hydrostatic Test Chamber for SNF WPs
(Courtesy of AECL)

The Gaps Between Fuel Pins in CANDU SNF Are Smaller Than in LWR SNF (Conservative Technology Extrapolation)

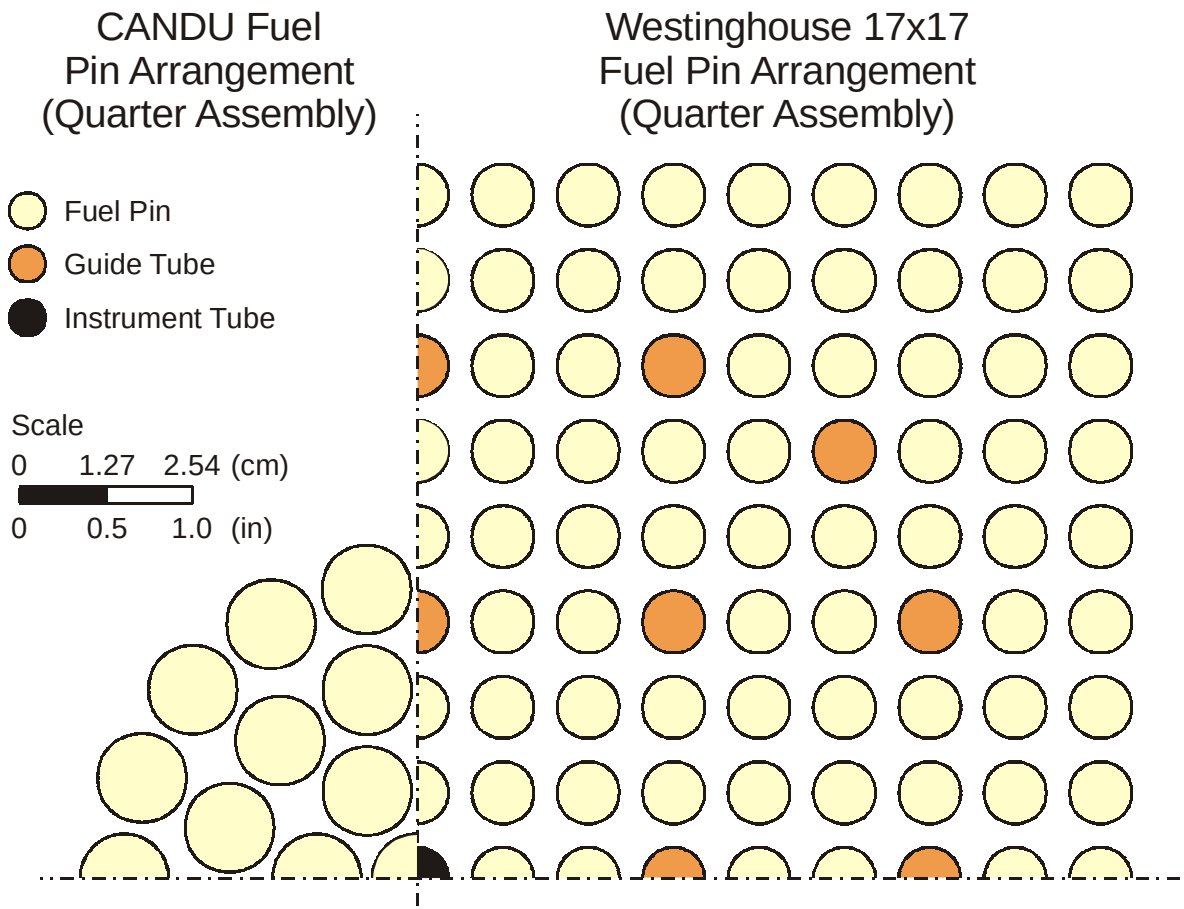

What Is the Impact of Fill on the SNF Maximum Temperature?

Maximum SNF temperature allowed is 350ºC

Fill alters heat transfer properties

An Evaluation of the Thermal Impact Was Based on a Multistep Approach

- **Determine fill thermal properties**
  - **Many measurements exist of the thermal conductivity for various UO_2 fills**
  - **Measurements have been correlated for different fills**
- **Analyze heat transfer**
  - **Heat transfer calculations conducted based on measured fill thermal conductivities**
  - **Comparisons with other types of analysis**

Measured Thermal Conductivity for Uranium Dioxide Particulate Fill in Helium (1 atm)

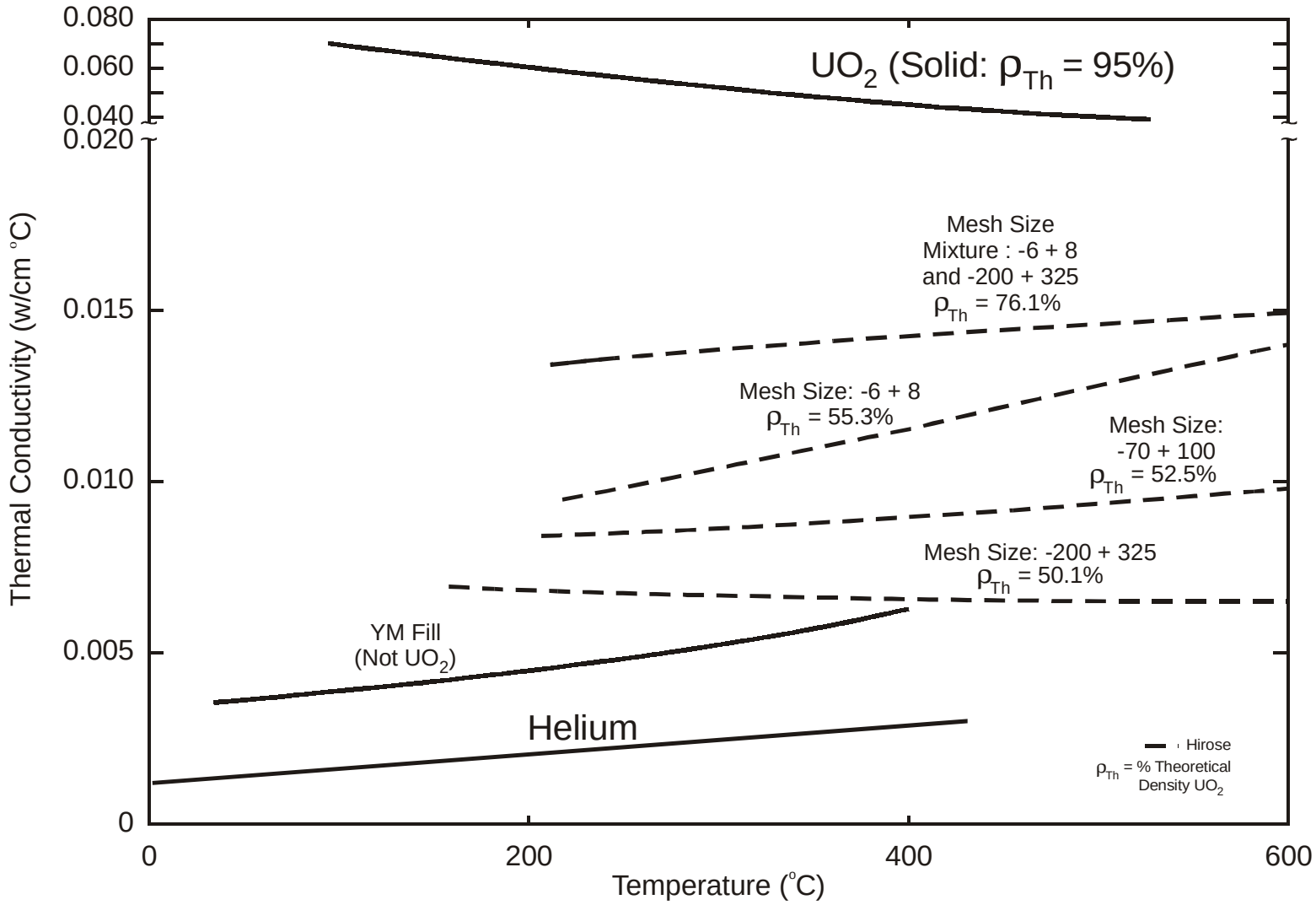

DUO_2 Fill Lowers Temperatures When Geometric Dimensions Are Small Because Its Thermal Conductivity Is Higher than That of Helium

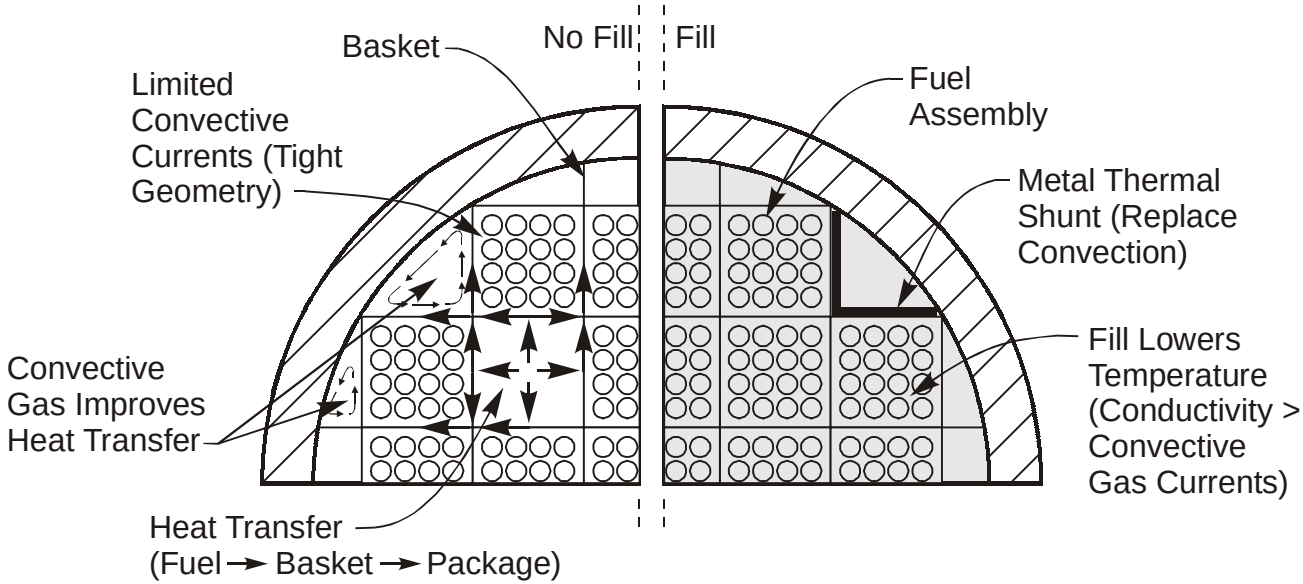

Fill Has Little Impact on Temperatures of PWR SNF Assemblies

- **Analysis using current YMP WP for 21 PWR fuel assemblies**
  - **Thermal conductivity: 0.01 W/cm·ºC**
  - **WP heat load: 11.8 kW**
  - **Temperature drop from center of SNF assembly to basket: 7.1ºC**
- **Results of a previous YM project analysis with an earlier WP design but the same thermal conductivity of the fill**
  - **With fill: 9ºC**
  - **Without fill: 14ºC**

Conclusions

- **DUO_2 fill may significantly improve the performance of the repository**
- **Experiments have demonstrated the use of fill materials with SNF**
  - **U.S. experiments with steel shot**
  - **Canadian experiments with other fills**
- **Literature measurements and calculations indicate that a DUO_2 fill will have little impact on WP temperatures**