ICANS XV
15th Meeting of the International Collaboration on Advanced Neutron Sources
November 6-9, 2000
Tsukuba, Japan

Design Validation Test Stand Guide Inserts for the Spallation Neutron Source

D.M. Williams[1]*, J.L. Bailey[2], and T. Fornek[2]

[1]Oak Ridge National Laboratory UT-Battelle and the Spallation Neutron Project
[2]Argonne National Laboratory and the Spallation Neutron Source Project
*williamsdm@ornl.gov

Abstract

Successful operation of the Spallation Neutron Source (SNS) Facility in Oak Ridge, Tennessee depends on providing guide systems that channel neutrons to each experimental instrument position with a minimum loss in flux. These guide systems originate approximately 1m from the moderator and pass through Shutter Gates. The guide sections passing through the Shutter Gate, called Shutter Inserts, align with features separate from the Shutter Gate. These features are located on the first guide section called the Core Vessel Insert. This arrangement accommodates accurate alignment of the guide system without requiring accurate alignment of the heavy Shutter Gate. These Core Vessel and Shutter Inserts are being developed for the SNS Facility and will be tested in the Design Validation Test Stand (DVTS). This paper addresses the DVTS Core Vessel and Shutter Inserts.

Overview and Design Objective

The Spallation Neutron Source (SNS), being constructed in Oak Ridge, Tennessee will be a world-class facility with the world's most powerful pulsed neutron source. The High Power Target Station will provide (up to 24) different pulsed neutron beam lines allowing the use of a wide range of neutron scattering instruments for experimenters to conduct research. Most of these neutron beam lines are equipped with guide systems that originate approximately 1m from any of the four moderators. The first guide sections, closest to the moderators, consist of two subassemblies known as the Core Vessel Insert and the Shutter Insert. These sections, that will be tested in the Design Validation Test Stand (DVTS), are illustrated in Figure 1. In the SNS Facility, these work in conjunction with the Shutter to turn the neutron beam off and on to allow the replacement of samples and instruments. The Shutter Gate blocks the neutron beam when the Shutter Gate is in the upper position. The neutron beam passes through the Core Vessel Insert and the Shutter Insert when the Shutter Gate is in the lower position. The Core Vessel Insert and the Shutter Insert must be aligned with the beam center line within ± 1 mm when the Shutter Gate is in the open position (Shutter Gate down). The Core Vessel Insert is mounted to the Core Vessel flange and is accurately positioned by two alignment dowel pins. A special alignment system is provided to accurately align the Shutter Insert.

Design Philosophy

Alignment is one of the most challenging issues involving the Shutter Insert design. Several factors prohibit precise alignment of the Shutter Gate from being a viable option for providing alignment of the Shutter Insert. First, the Shutter Gates weigh as much as 39,000 kg, making positioning of the Shutter Gate extremely difficult. Second, the Shutter Gate is guided in rails with a clearance of 3 mm and a straightness of only ± 3 mm. In addition, each end of the Shutter Insert must be positioned to within ± 1 mm. Obviously, this alignment

requirement is nearly impossible to meet if the Shutter Insert is mounted rigidly in the Shutter Gate. A simple solution to this situation is to allow the Shutter Insert to float within the Shutter Gate and to use an independent set of alignment supports to provide accurate alignment when the Shutter Gate is in the open (down) position. Verifying the operation of this design is the main objective of the DVTS.

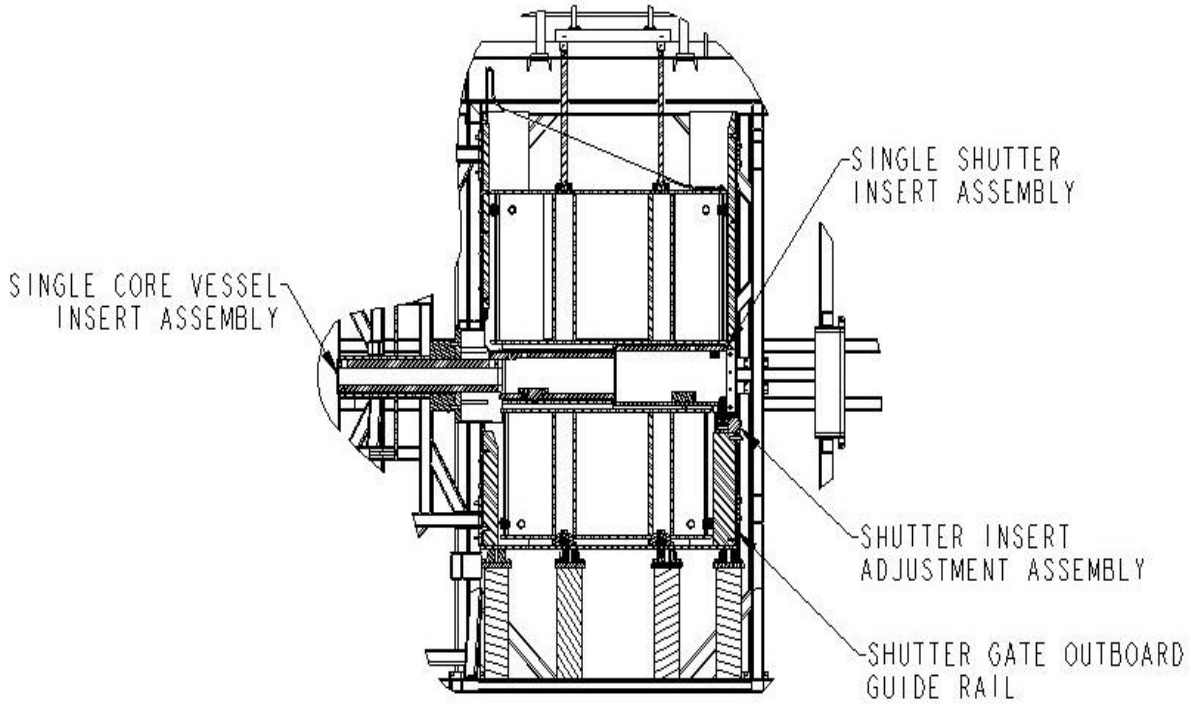

Figure 1. DVTS Core Vessel Insert and Shutter Insert Installation

The Shutter Insert rides inside a stepped through-hole formed in the Shutter Gates. This stepped through-hole has a cross section that is approximately 25 mm larger in width and height than the cross section of the Shutter Inserts. This arrangement allows the Shutter Insert to move (float) within the Shutter Gate through this hole, allowing the alignment supports to engage when the Shutter Gate lowers to its open position. When the Shutter Gate is in the down position, the neutron beam passes through the Core Vessel Insert and the Shutter Insert allowing researchers to perform their experiments. When the Shutter Gate rises to its upper position, the beam is completely blocked by the Shutter Gate. This position allows replacement of samples and instruments.

The Shutter Insert is equipped with two sets of mounts. One set of mounts supports the Shutter Insert when the Shutter Gate is in the upper position. These mounts consist of three ball transfers that are mounted in the bottom side of the Shutter Insert. As the Shutter Gate rises, these ball casters engage into counterbored contours that are formed in the Shutter Gate stepped through-hole. The diameter of these counterbored contours are sized to allow the Shutter Inserts lateral motion within a 16mm diameter zone. This arrangement is shown in Figure 2. The second set of mounts consists of the alignment supports. The Shutter Insert rests on the alignment supports when the Shutter Gate is in the down position (beam open). When the Shutter Gate is lowered to its down position, the Shutter Insert alignment supports engage mounting surfaces on the Core Vessel Insert and the Adjustment Mechanism. The Adjustment Mechanism is mounted on the Shutter Gate outboard guide rail. These supports provide accurate alignment of the Shutter Insert.

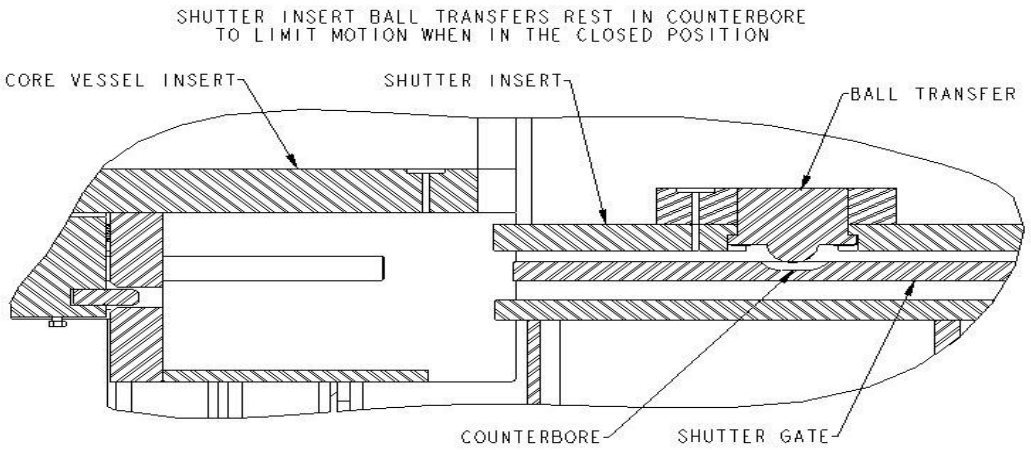

Figure 2. DVTS Shutter Insert Ball Transfer Supports

Shutter Insert

The Shutter Insert alignment supports consist of a classic kinematics mounting system. These alignment supports are illustrated in Figures 3, 4 and 5. Three spherical mounting surfaces are located on the Shutter Insert. These three spherical mounting surfaces interface with mating surfaces when the Shutter Gate is in the open position. Two of these spherical mounting surfaces interface with mating surfaces on the Core Vessel. The third spherical mounting surface rests in the adjustment mechanism. The two spherical mounting surfaces that interface with the Core Vessel Insert rest in a tapered contour and on a flat surface. The spherical mounting surface that interfaces with the Adjustment Mechanism

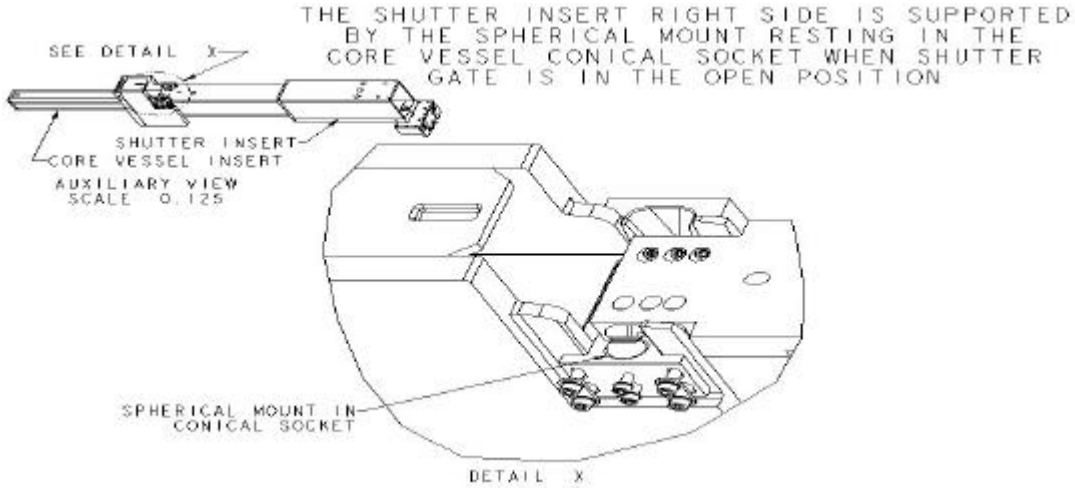

Figure 3. DVTS Shutter Insert Right Alignment Support

rests in a v-groove. Each mounting surface is hardened to RC 45 to 50 to insure that no local yielding occurs. The spherical radii were sized to insure that the maximum contact stress in the alignment supports is less than 135,000 PSI, assuming the Shutter Insert is completely filled with steel shielding material.

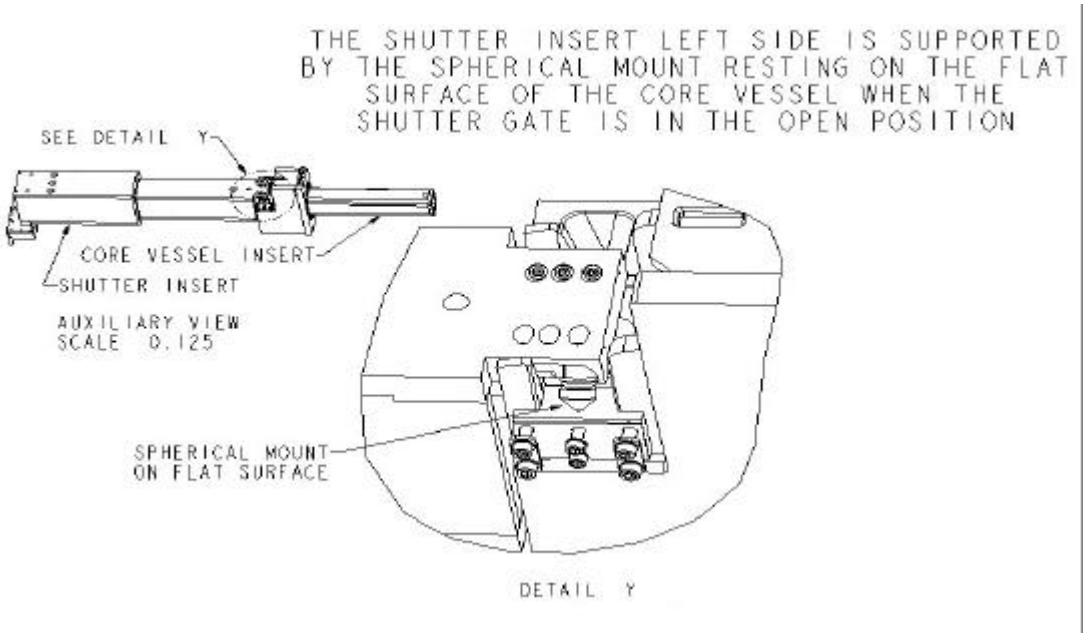

Figure 4. DVTS Shutter Insert Left Alignment Support

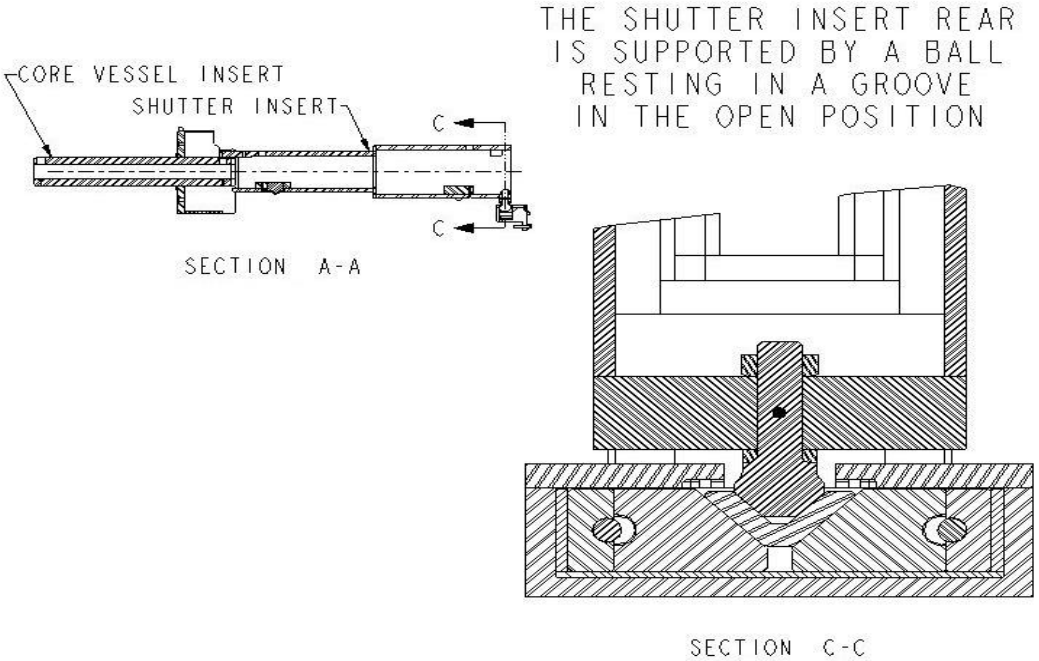

Figure 5. DVTS Shutter Insert Rear Alignment Support

Two styles of Shutter Inserts will be provided. One style will accommodate a single beam line and the other style will accommodate two beam lines. The single beam line Shutter Insert weighs approximately 3,700 kg. The double beam line Shutter Insert weighs approximately 7,700 kg.

Core Vessel Insert

The Core Vessel Insert is attached to the Core Vessel flange by four-threaded studs that protrude from the Core Vessel flange. A double Helicoflex™ metal o-ring seals the mating flanges. The Core Vessel flange is equipped with tubing to accommodate cooling, vacuum and helium supply. Two lines are coolant supply and return lines, two are helium supply lines and one is the vacuum supply between the double o-ring seals.

The Core Vessel Insert is also equipped with mounting surfaces that interface with two of the Shutter Insert spherical mounting surfaces. One of the surfaces consists of a conical socket as illustrated in Figure 3. These surfaces are hardened to RC 45 to 50 to insure that no local yielding occurs.

Two styles of Core Vessel Inserts will be provided. One style will accommodate a single beam line and the other will accommodate two beam lines. The single beam line Core Vessel Insert weighs approximately 1,250 kg. The double beam line Core Vessel Insert weighs approximately 1,900 kg.

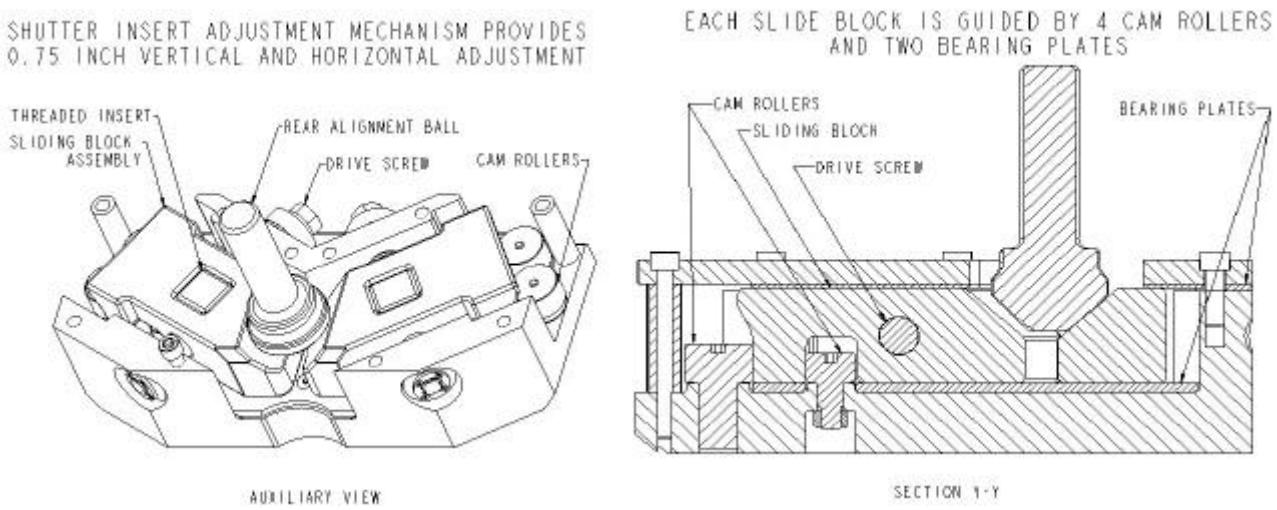

Figure 6. Shutter Insert Adjustment Mechanism

Adjustment Mechanism

The adjustment mechanism is mounted on the Shutter Gate outboard guide rail as shown in Figure 1. The rear spherical mounting surface of the Shutter Insert rests in a v-groove that is formed by chamfers on two sliding blocks. This arrangement is illustrated in Figure 6. The sliding blocks are driven by drive screws and guided by a set of cam followers. The drive screws are positioned so that the slide blocks are driven inward and outward along a 30-degree angle. The rear spherical mounting surface (Rear Alignment Ball) moves vertically when the sliding blocks are driven in the same direction, either in an inward or outward direction. As the slide blocks are driven inward (toward each other) the v-groove closes inward causing the Shutter Insert rear spherical mounting surface to rise. As the slide blocks are driven outward (away from each other) the v-groove opens outward causing the Shutter Insert rear spherical mounting surface to fall vertically. When the sliding blocks are driven in opposite directions, the rear spherical mounting surface moves laterally. The adjustment mechanism provides the capability to reposition the Shutter Insert rear spherical mounting surface of the Shutter Insert to any position within a 19 mm diameter circle. The chamfered surfaces forming the v-groove are hardened to RC 45 to 50 to insure that no local yielding occurs.

Construction

Both inserts are constructed using conventional construction practices and materials. Each insert is fabricated from carbon steel welded construction and stress relieved to remove any local residual stresses and to eliminate the possibility of local yielding. The maximum bending stress in these welded members is also limited to 12,000 PSI to eliminate the possibility of yielding. The Core Vessel flange is constructed from stainless steel to accurately represent the facility Core Vessel flange during seal testing. The Core Vessel flange and the main Core Vessel Insert flange will be fabricated with a flatness of 0.001 of an inch to accommodate the double o-ring Helicoflex™ seal requirements. All carbon steel components will be nickel plated to minimize corrosion.

ACKNOWLEDGEMENTS

This work is supported by the Department of Energy, Oak Ridge National Laboratory and Argonne National Laboratory.

REFERENCES

[1] Chipley, Ken and Jacobs, Lorelei, "Utilities and Shielding for the Spallation Neutron Source Target Station", Proceedings of the Third International Meeting on Nuclear Applications of Accelerator Technology, American Nuclear Society, Long Beach, CA, November, 1999.

[2] Chipley, Ken, "Design Description of the Bulk Shielding for the Spallation Neutron Source Target Facility", Proceedings of 8th International Conference on Nuclear Engineering, Baltimore, MD, April 2-6, 2000.