Li Experiments in LIMITS

Richard Nygren, presenter

Sandia National Laboratories Team

Tina Tanaka
Jimmie McDonald
Tom Lutz
Fred Bauer
Ken Troncosa
Richard Nygren
Dennis Youchison
Mike Ulrickson

US-Japan Joint Workshop *Port Townsend WA, 28-30 August 2003*

Workshop Agenda

Sandia is a multi-program laboratory operated by Sandia Corporation, a Lockheed for the United States Department of Energy under Contract DE-AC04-94AL85000.

Sandia National Laboratories

LIMITS Testing supports NSTX Li Module

NSTX Plan

- Decision point in 2006 to install a Li divertor module. (delayed)
- Cryopumps to be installed in 2004 to provide density control.
- Present results of MHD testing to PAC of in ~Jan04. (delayed)
- ALIST Task will consider revising plans.

  A. Continue development of experiments/models at same pace.

  B. Consider a full toroidal divertor for NSTX in 2006.

LIMITS Plan – provide experimental data

- Build Li loop and Li handling facilities in 2002-2003.
- Prepare magnet and flow meter for Li flow tests in 2003.
- Perform flow test with simple (round) stream in 2003.

LIMITS: Liquid Metal Integrated Test System

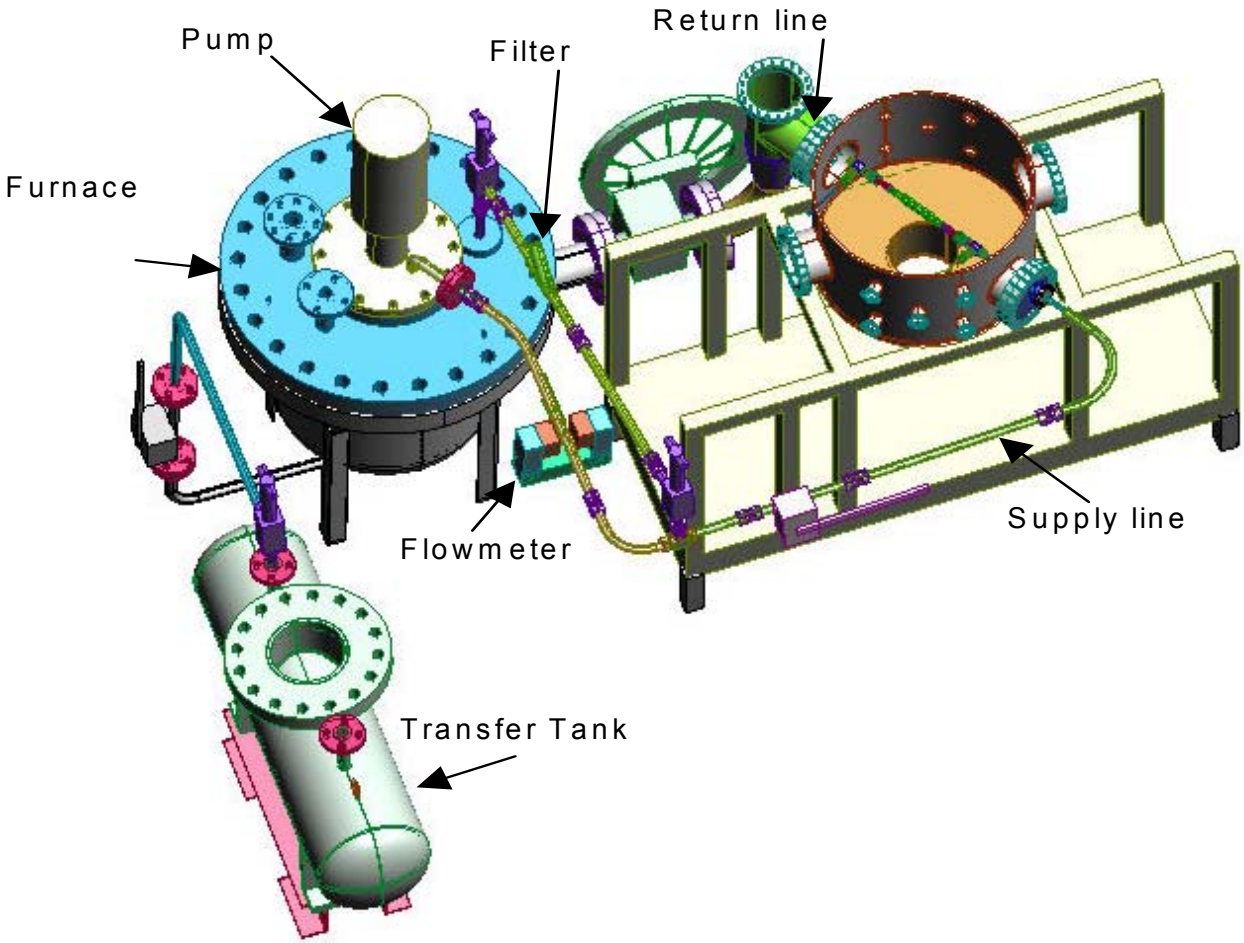

Sandia National Laboratories

Pump

The liquid metal pump has been repaired and reinstalled

- **Two bands of molybdinum 10 mm wide and .5 mm thick were plasma sprayed onto the top and bottom edge of the impeller**

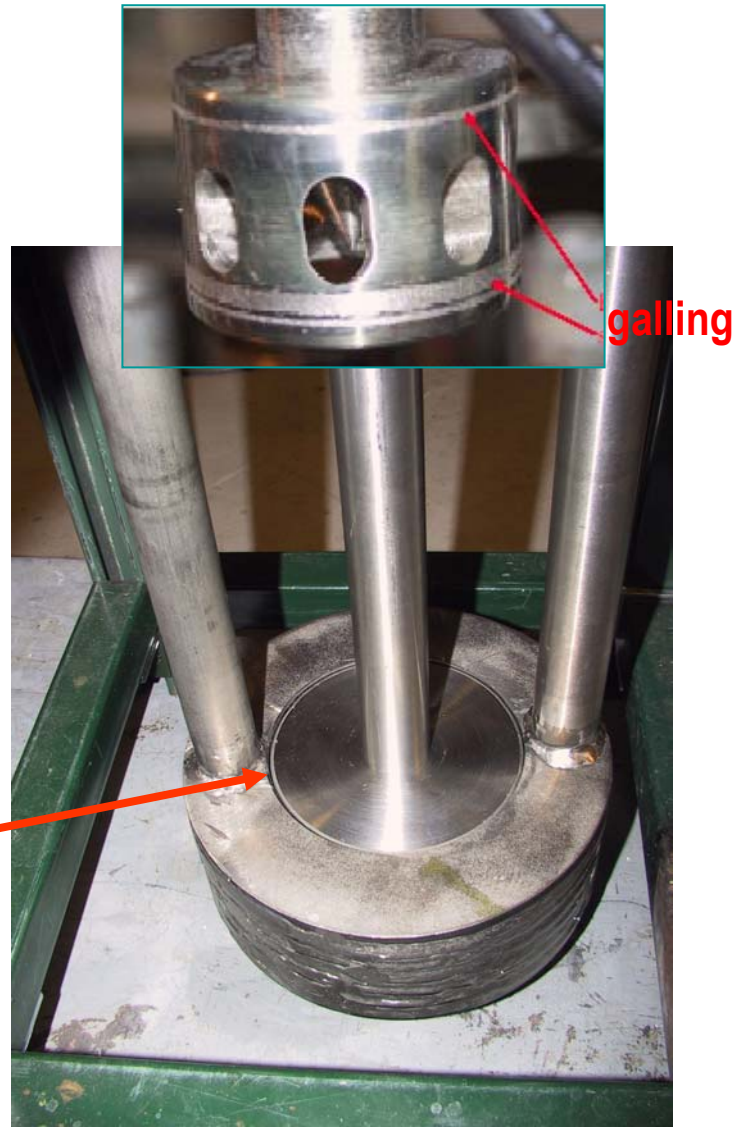

Cameras

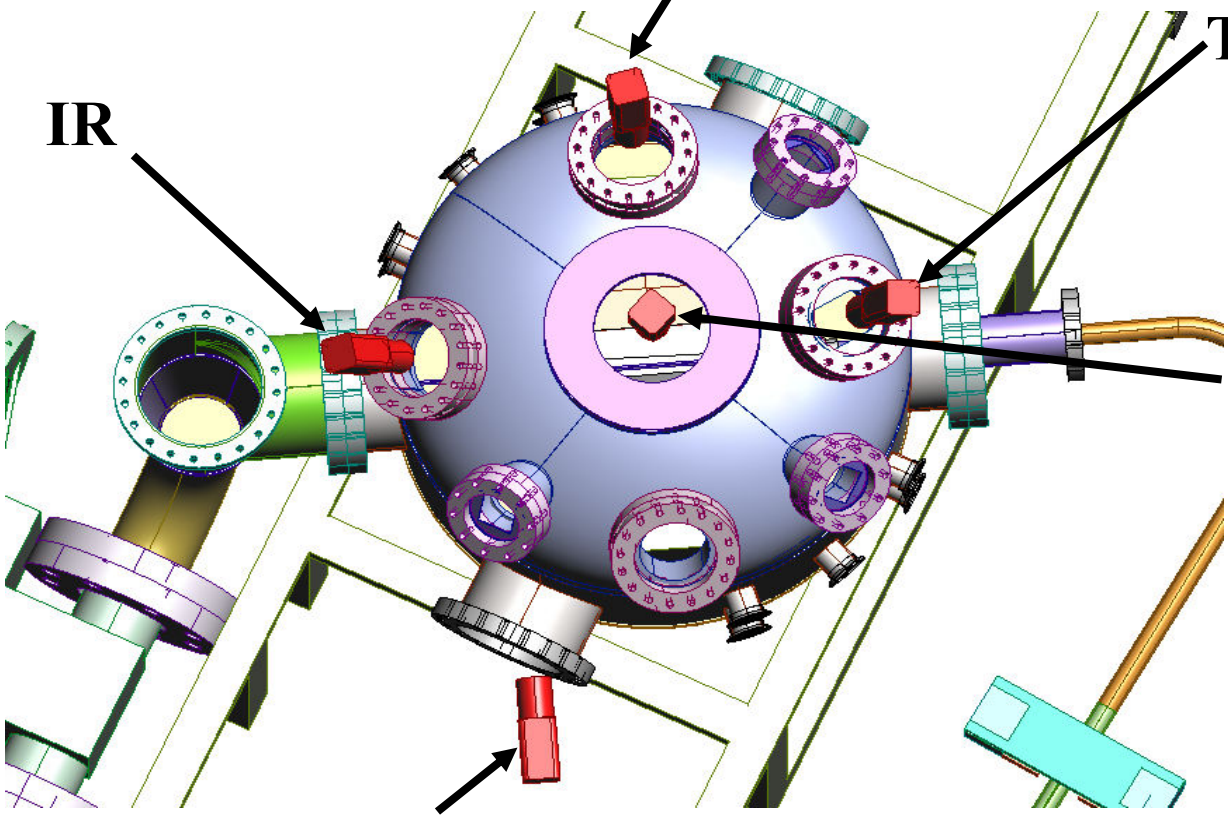

Sandia
Li Handling Experience

- Battery Program at Sandia handles lithium and works with static Li pools.
- Sandia Fusion Technology developed safety procedures (documented) e.g., Operating Procedure for Li handling. *(previously reported and distributed)*

Our people are trained; appropriate equipment is always on hand.

- We have filled casks with Li ingots in an Ar atmosphere in our glove box, and have piped molten Li from the casks into our furnace chamber.
- A Li stream was introduced in LIMITs.

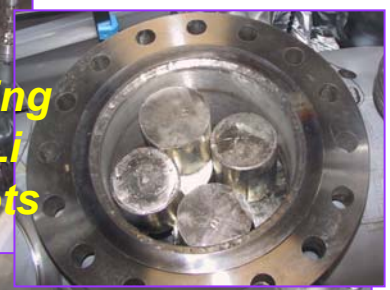

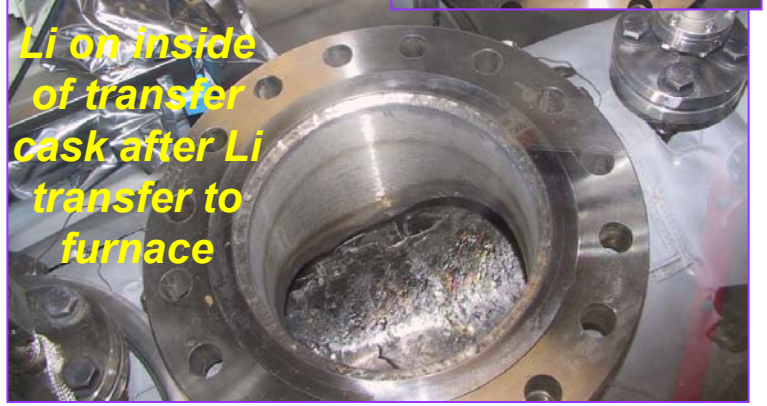

Sandia
Li Handling Experience
continued

- Lithium cleanup - We routinely clean Li from containers, tools, seals, etc. by wiping with isopropanol and then water. We react small amounts of Li from (cold) objects by immersion in a water tank.
- We cleaned LIMITS after our first Li flow experiments.

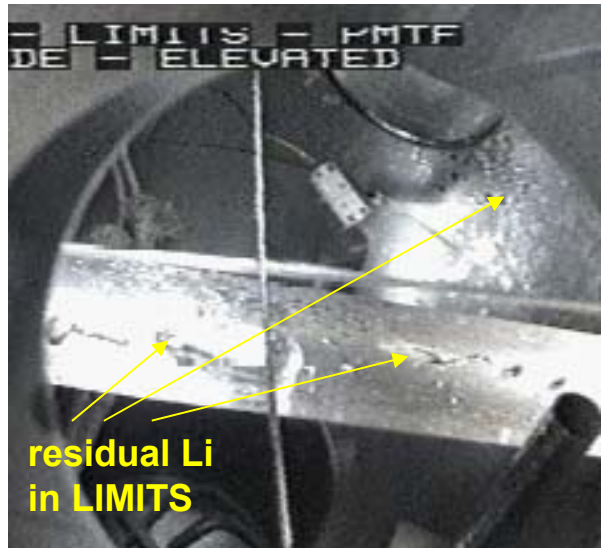

view though port of "catcher" tray

- We finally conducted a (long-planned) Li Fire Demonstration.
- An unplanned Li fire on 9/13/02 gave us first hand experience with Li fires and our emergency response teams.

valve with Li and Lith-X and insulation stripped

Handling of Li & Cleanup of Parts

We unpack Li ingots and load the transfer casks in a glove box.

Air is purged and we monitor the Argon cover gas to keep very low water and air partial pressures.

Small solid pieces of cool lithium immersed in the water on the pad safely react slowly with water.

Photo from Chemtall-Foote video

This creates a highly basic hydroxide solution that requires proper disposal.

Li Fire Demo Video (still images)

Excerpts from video of Li fire demonstration

Li fire is very localized to surface.

Lith-X is easily applied by hand or with a Class D extinguisher.

Forceful spray from a Class A,B,C extinguisher moves the lithium and increases burning surface area.

Water does not extinguish the fire.

We ignite a Li ingot with a torch.

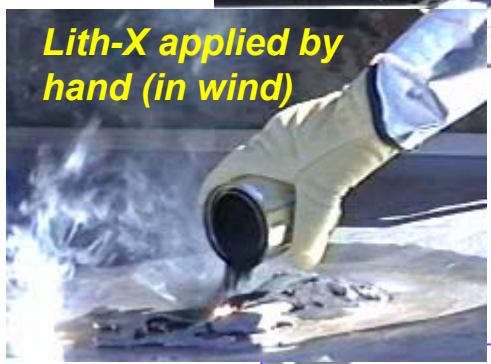

Lith-X applied by hand (in wind)

Burning molten Li

Class ABC spray redistributed Li

Sandia National Laboratories

Lithium Fire 9/13/02 – (excerpts from notes compiled by Tanaka)

.. 30 psi .. no flow.. (9:27AM) opened valves… **saw puff of white smoke near ¼" line**.

…. more gas flowing than .. bubbles in the transfer chamber ….

we realized we had to take the insulation off ….

Jimmie suited up … *apron, face shield, aluminized heat shields* for feet and arms, *leather gloves* and *heat resistant gloves*. …..

<u>we realized there was a fire</u> .. aluminized covering was glowing and melted.

Jimmie asked for ***metal containers*** and ***scissors***

Fred **turned off all heater controllers**. …..

Jimmie cut away **insulation containing Li** .. **placed it in *metal containers***, **exposing the burning area**.

Meanwhile Tina called **911 to report fire (9:47)** ….

Jimmie **scooped *Lith-X* onto the burning areas** … continued to cut away and cover burning insulation with ***Lith-X*** until it was all covered. [Others] opened doors … turned on ***ventilation***,… ***HEPA filtered vent*** ….

.. ***cans*** of insulation, lithium and Lith-X were taken outside the lab. ... heater power … was unplugged ..

Our response was good.
Lab people knew what to do.

Italicized words denote equipment <u>on hand</u>

LIMITS Li Flow Experiment for NSTX

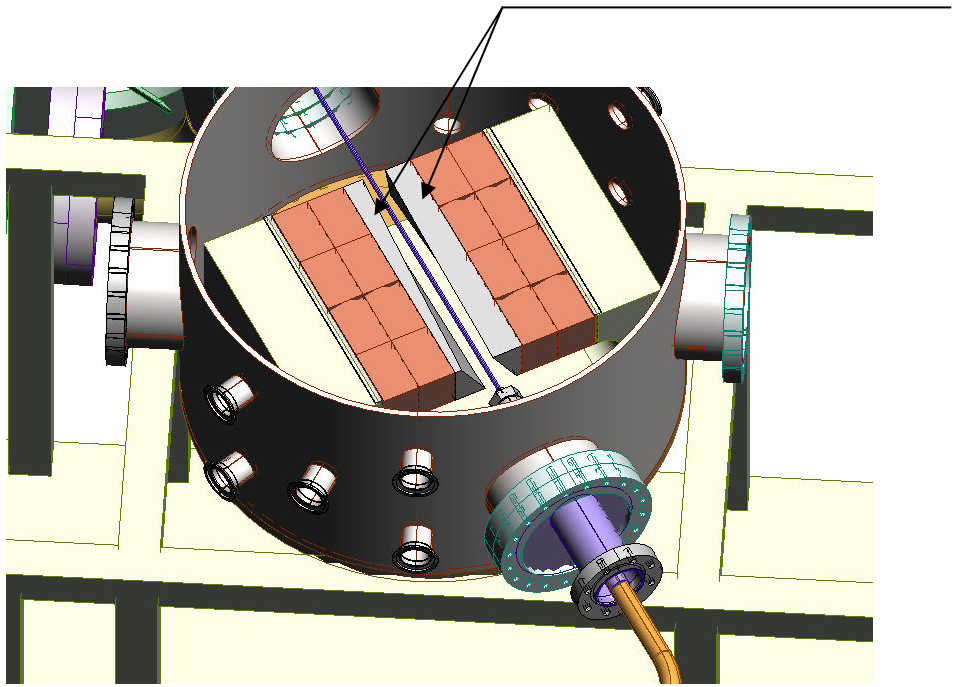

Magnet

- Shape of pole pieces, with taper and twist, duplicates NSTX divertor field with its gradients.
- New pole pieces were fabricated per revised.
- Recommenced testing in March.
- Modeling of currents induced in rigid Li slug moving in B-grad in LIMITS is in progress.

LIMITS Li Flow Experiment for NSTX

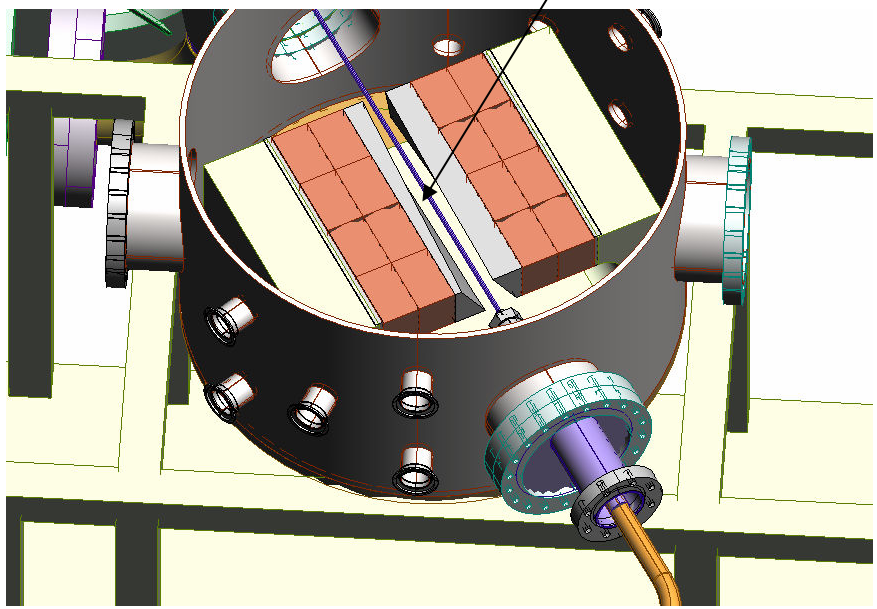

Short flow test

- Test with magnet was done first. (schedule driven)
- Li stream deflected.
- Li on pole piece froze.
- Frozen Li rapidly dammed opening.
- Test was terminated.

Li Stream in LIMITS

- Test without magnet (2nd)
- Flow appears uniform but has "blobiness"
- We saw some stream deflections and are concerned about blockage.
- We now have bypass leg with filter

Sandia National Laboratories

EM Flow Meter

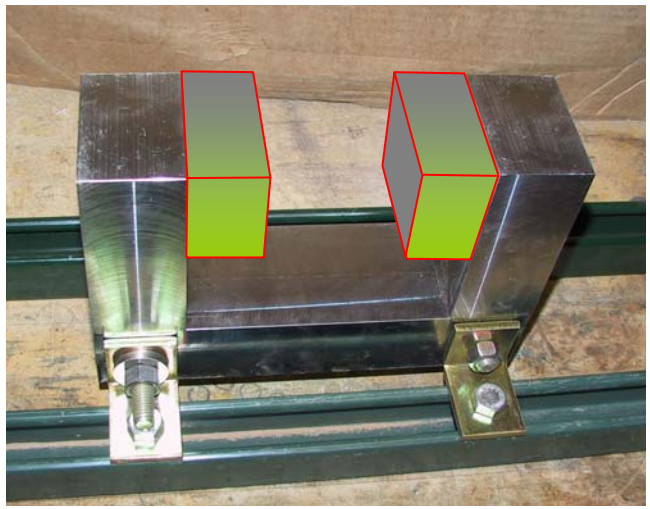

EM Flow Meter

- **Yoke fabrication completed; parts received; assembly in progress**
- **Initial calibration to be done using flow in transfer cask**

- **Voltages calculated using a PC Opera model of our flow meter configuration agree well with published data**

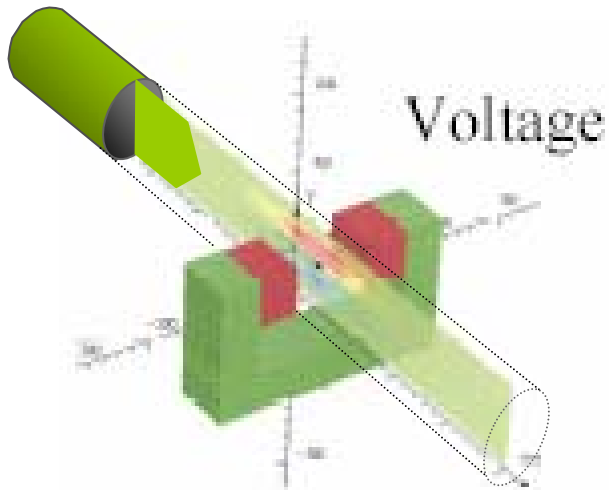

EM Flow Meter Calibration

Initial calibrations were during transfer of Li to the furnace.

- Flow meter (inverted) was installed on the 1” SS tube (0.82” ID) between the transfer cask and the furnace.
- We did 3 transfers by changing the Argon gas pressures in the cask and furnace.
- We monitored flow (meter), weight of cask, and Li level in furnace.

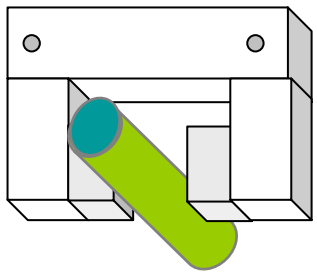

T1. Li from cask to furnace.

T2. Li from furnace to cask with flow meter raised 3/8” from **T1**.

T3. Li from furnace to cask with flow meter 3/8”below **T1**.

EM Flow Meter Calibration

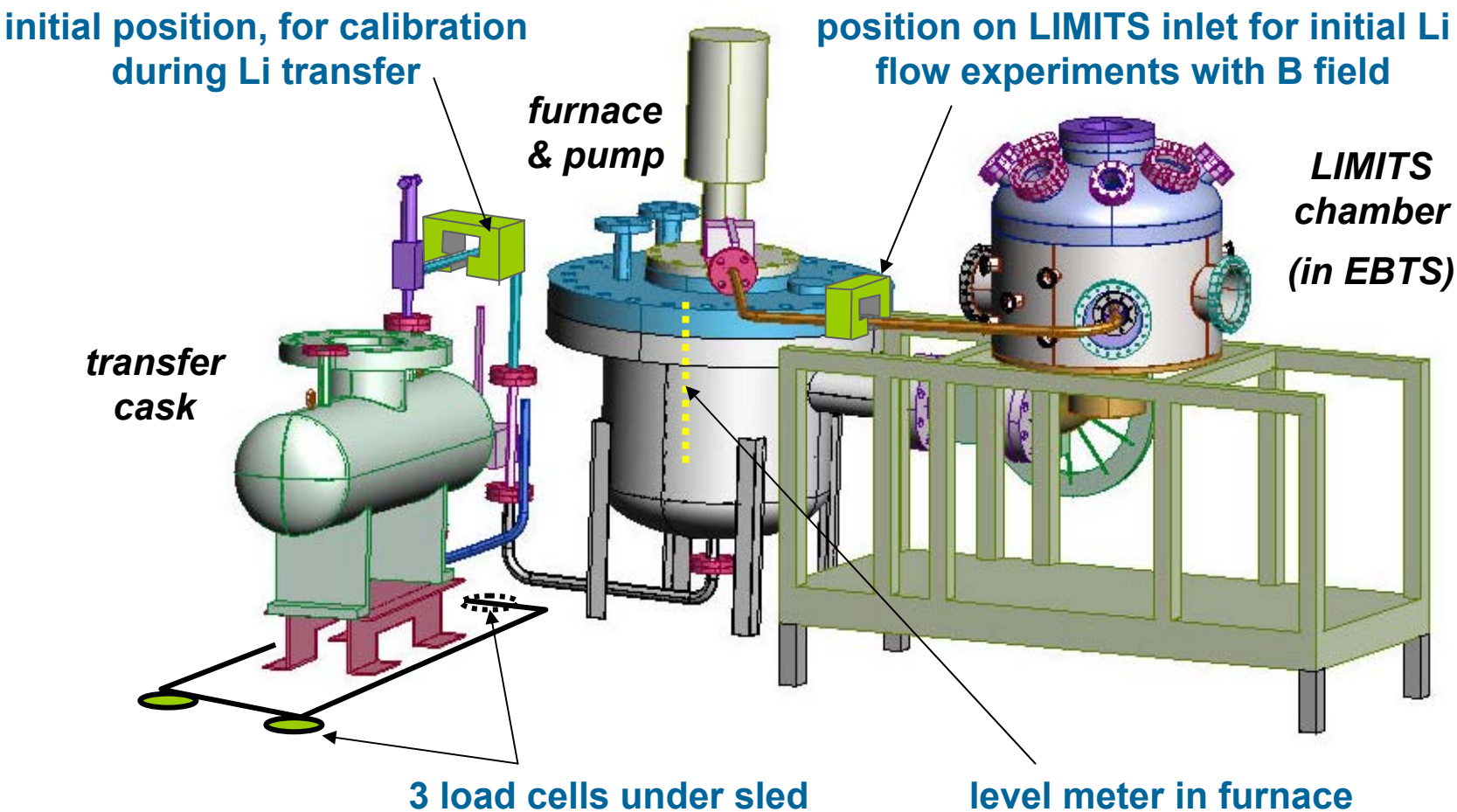

Sandia National Laboratories

EM Flow Meter Calibration

The primary objective was a calibration factor (K), which when multiplied with the flow meter signal, gives the flow in meters per second through the 0.82"ID SS tube.

We monitored three signals:

1. **weight of transfer cask**
2. **fill level in the furnace**
3. **flow meter (few millivolts)**

plus many thermocouples on the heating system for the furnace, cask and piping.

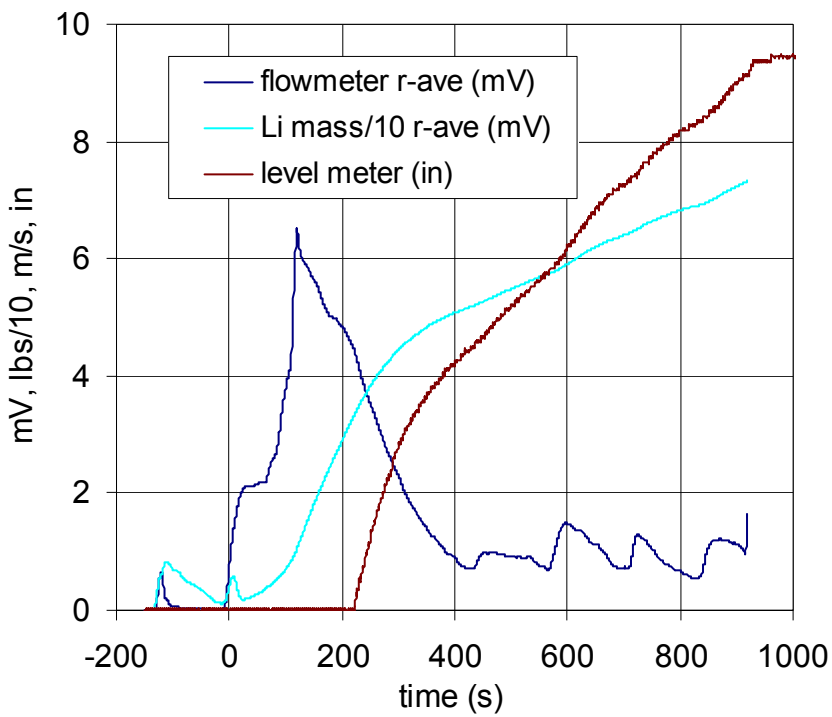

Li flow transfer data, transfer 1

Sandia National Laboratories

Integrated flow vs. mass gives calibration.

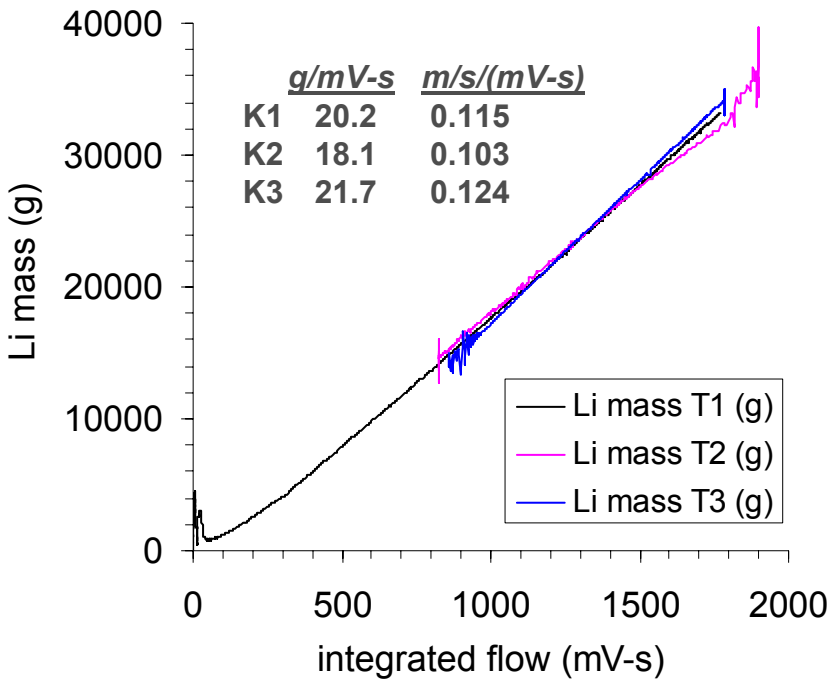

Curves show Li weight versus integrated flow (mV-s).

Integration constants (offsets) for T 2 and T3 were set to overlay the curves.

The slope was converted for K by dividing by density (0.515g/cm^3), flow area (3.407cm^2) and 100cm/m.

Differing values for K were expected because the position of the flow meter was changed.

Our diagnostics work well - good agreement between the mass transfer, previously uncalibrated level meter and the flow meter.

Sandia National Laboratories

Conclusions For This Series of Tests

1. **A Li stream will flow through NSTX divertor magnetic field.**
2. **Without the field, Li stream showed little deformation.**
3. **With the field, Li stream cross section elongated and twisted.**
4. **Improvements in the heating and controls were worthwhile.**
5. **Repaired pump appears to perform well.**
6. **An in-line filter must be installed in the Li supply line.**
7. **Some adjustments to our data collection will be helpful, e.g. improved lighting for videos.**
8. **The narrow gap and cool pole pieces impose a restraint.**

   Li contacting pole piece (80℃) will freeze and interrupt test.