Customer Input: ITER

A partnership in transition

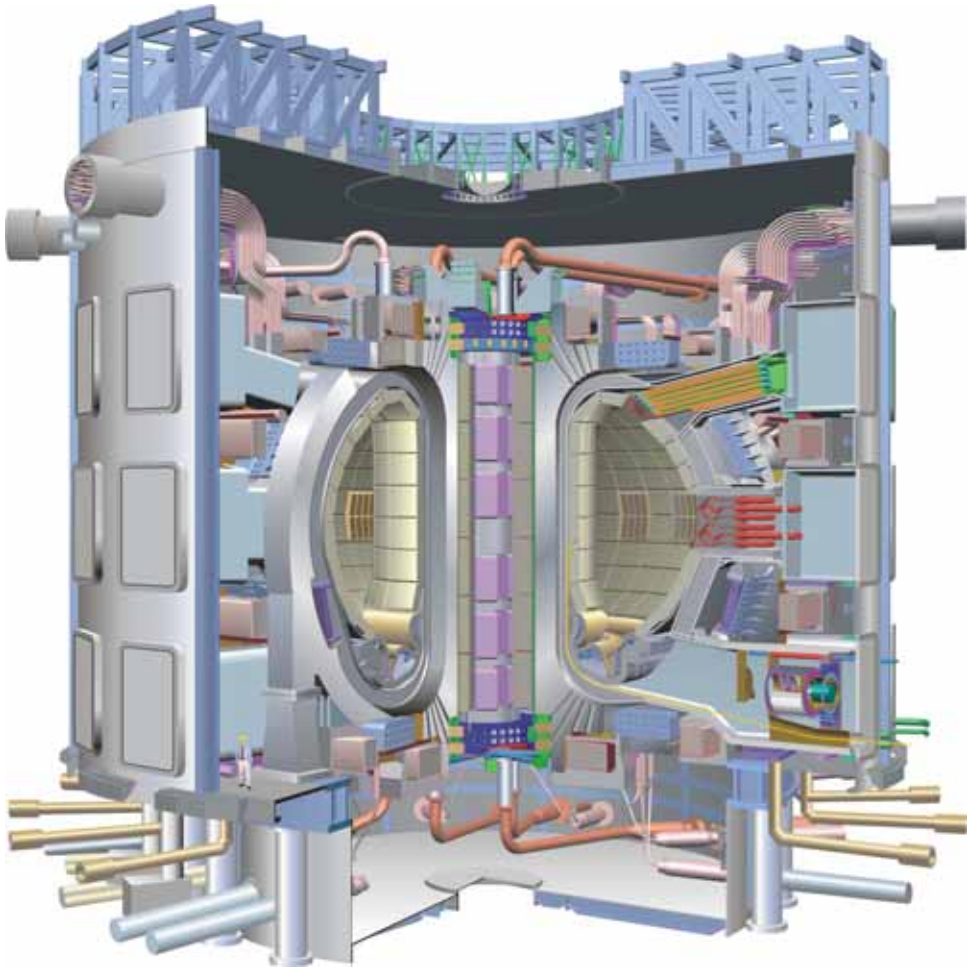

VLT meeting

DOE Germantown, Maryland

Ned Sauthoff

August 25, 2005

Overview of the transitions

- **The VLT- and USIPO ITER roles are evolving as the US Contributions to ITER project advances**
  - FY05:
    - VLT supports much R&D and some design (~$10M)
    - USITER supports project-specific activity, procurements, etc. (~$5M)
  - FY06:
    - Transition of ITER-R&D and design from VLT to USIPO in ~May 2006
      - VLT: ~$6.6M for early R&D
      - USIPO: OPC ~$3.5M for R&D, picking up VLT R&D scope in ~May 2006
      - USIPO: ITER Prep $6M,
      - USIPO: TEC ~$16M
  - FY07-~10:
    - USIPO conducts strong ITER R&D and design
  - FY10-14:
    - USIPO conducts US ITER engineering-follow and acceptance testing
  - FY15 and beyond: Technology research on ITER
    - US ITER Operations supports commissioning and operations
    - VLT uses ITER as a tool for technology research

Structure of this talk

VLT scopes in FY06

VLT scopes in FY07 and beyond

- FY07-14 ITER construction
- FY15-35 ITER exploitation

FY06: the year of transition

- **Transition of ITER-R&D and design from VLT to USIPO in ~May 2006**
  - VLT: ~$6.6M for early R&D
  - USIPO: OPC ~$3.5M for R&D, picking up VLT scope in ~May 2006
  - USIPO: ITER Prep $6M, TEC ~$16M

Magnets - Central Solenoid [~$2M]

Code: fundamental, primarily ITER-specific, ITER but contrbutes to fundamental

1. **Superconductor development**
   - Fundamental Nb3Sn Strain (Simultaneous Jc(B,T,ε))
   - Advanced HTS for fusion applications (e.g. MgB2)
2. **Jacket Material**
   - Low Cycle Fatigue
   - Reduced SAGBO Alloy Development
3. **Advanced quench detection sensor development**
4. **Embedded quench sensor electromagnetic analysis**
5. **Coupled structural-thermal analysis of winding pack component properties and tolerance variations**
6. **Winding pack tension and shear detailed stress analysis**
7. **Transient electrodynamic analysis voltage/peak field for normal and off-normal events**
8. **Full-size butt-joint development**
9. **Full-size US CICC samples testing in SULTAN and data analysis**
10. **Full-size US CICC samples testing in PTF and data analysis**
11. **Supporting small scale lab experiments and measurements - transverse bending and compression standard test rig**
12. **Graduate Student Research (strands, cables, jacket properties)**

Environmental, Safety, Health and Quality Assurance [~$1.48M]

- **Tritium Source Term Validation:**
  - study mixed material effects in TPE;
  - evaluate and establish impact on ITER 1100
- **Fusion Safety Code Development Validation:**
  - Update MELCOR models, provide support to ITER IT, validate models 250
- **Magnet Safety Code Development and Validation.**
  - Perform analyses of unmitigated quench of PF system 130

Ion Cyclotron [~$1.05M]

- **Support ITER ICH design task**
  - Carry out electrical analysis of advanced or novel antenna concepts. 110
  - Carry out analysis and prepare for tests of Faraday shield construction 100
- **3-strap mockup R&D - Make an electrical mockup of a 3-strap to one-feed antenna; test to validate predicted characteristics. 150**
- **Ceramic radiation test R&D - Carry out tests of different ceramics in HFIR to measure rf electrical characteristics after irradiation. 100**
  - Needed to design and locate insulators in antennas for neutron-producing facilities such as ITER.
- **RF Breakdown studies- experiments to determine effect of pressure, materials, irradiation, etc. on rf breakdown in fusion-experiment-like conditions 295**
- **RF-edge interactions - study effect of high-amplitude rf fields on plasma in the vicinity of the antenna 150**
  - Needed to understand and predict anomalous power dissipation and power deposition on or near antenna structure
- **JET-EP antenna commissioning and operation - test ITER-like antenna prototype in JET under near-fusion plasma conditions 150**

Vacuum Pumping and Fueling [~$0.6M]

- **High-throughput guide tube test with ITER relevant pellet parameters 110**
- **Evaluate and compare acceleration techniques for ITER PIS (gas gun vs centrifuge). 90**
  - Gas gun has lower R&D costs, therefore this acceleration option needs a serious evaluation.
- **Prepare a conceptual design for a cryocooler based cooling system for the ITER PIS extruder. 75**
  - Needed to determine if a cryocooler based cooling system will work for the ITER PIS. A cryocooler based system is expected to have reduced operation and mantainence costs.
- **Design of a continuous extruder for ITER PIS 125**
  - This is the VLT funded part of R&D task #2. This task is part of ITER Task Agreement IT 18-03.
- **Design a high throughput compact injector for ELM triggering proof of principle test on D3D or JET (ITER relevant) 75**
  - Related to ITER needs to trigger small ELMs in order to extend divertor wall lifetime.
- **Development and experimental use of disruption mitigation techniques - Massive gas puff on D3D 75**
  - Needed to develop an ITER disruption mitigation solution. Not currently in the ITER design but anticipated to be added in the future.
- **Modeling of ITER fueling scenarios with inner wall pellet injection 50**
  - This modeling is a continuation of the work with Parks at GA to compare theory to existing experiements and extrapolate to ITER.

Electron Cyclotron [~$0.59M]

- **1 MW, 120 GHz Research and Development 350**
  - VLT program support of the R&D and design of the ITER 120 GHz gyrotron. This work also contributes to the VLT mission of improved understanding of megawatt and multi-megawatt power level gyrotrons.

- **Transmission Line Research and Development 140**
  - VLT Program support of research and development of high frequency microwave transmission lines. This work also contributes to the VLT mission of improved understanding of high power transmission lines.

- **Gyrotron Reliability Studies 100**
  - Research and development of collectors, windows, brazing techniques, etc. for improving the reliability and lifetime of megawatt power level gyrotrons.

Diagnostics [~$0.33M]

- Contract to investigate and prototype ITER compatible shutter designs 334

Blanket/Shield [~$0.3M]

- **Testing of Be to Cu mockups from PTs to support their FW design and R&D.**
  - The US is one of two (perhaps three) facilities in the Project. $300K

Systems Engineering and Design Integration [~$0.1M]

- This task provides neutronics analysis support to the TBM program

Test Blanket [~$?M]

- **The ITER Test Blanket is a mission element of ITER**
- **The Test Blanket program is outside the ITER Project (international and domestic)**
- **The US must decide on its role and participation**
  - Technically appropriate
  - Affordable
  - Integrated with the other parties
  - Integrated with ITER
- **Effective planning is key to US engagement in the Test Blanket program**

Materials issues with provisional U.S. procurement allocations

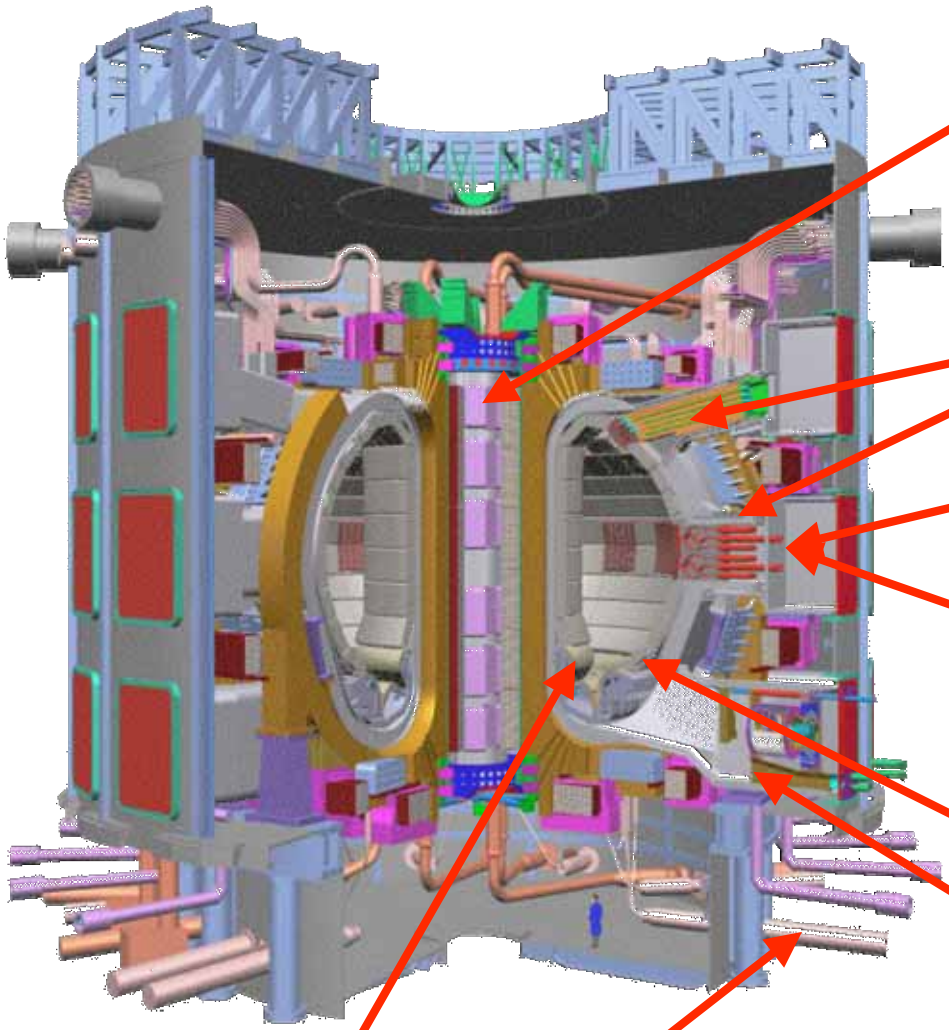

4 of 7 Central Solenoid Modules

Steady-state power supplies

15% of port-based diagnostic packages

44% of ICRH antenna + all transmission lines, RF-sources, and power supplies

Start-up gyrotrons, all transmission lines and power supplies

+ Test Blanket

Baffle (Module 18)

Roughing pumps, standard components

Tokamak exhaust processing system

pellet injector

Cooling for divertor, vacuum vessel, …

Magnet - Central Solenoid

- **Characterization of candidate jacket materials (base and welds)**
  - design of the conductor demands qualification of the jacket material
  - There is much argument about the proper materials
    (Incoloy 908, JK2LB+, EU??, other?)
  - Fracture mechanics analyses and tests
  - Each material seems to have pro's and con's
  - The decision must made soon (~4/06).

- **Development of NDE methods for small flaw detection (base and welds)**
  - long fatigue life requires tight inspection requirements
  - 9/06

Incoloy Alloy 908 jacket from CSMC used for initial butt weld development using Alloy 9HA weld wire

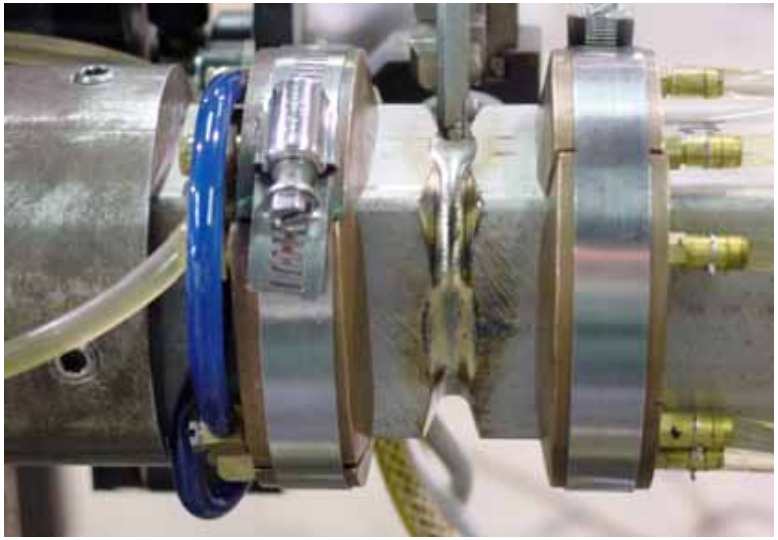

third pass

Blanket/Shield Modules

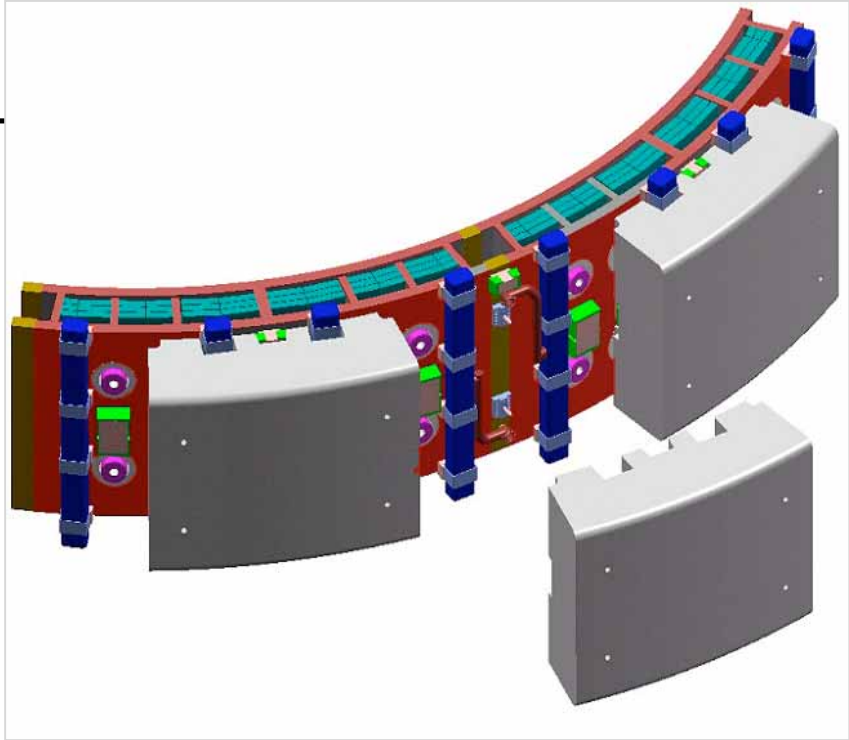

- **Blanket/First Wall:**
  Bonding of Be to Cu alloy
  - Bonding
    - Can Titanium be used as a diffusion barrier between Be and Cu?
    - Are there H embrittlement issues for a mostly buried layer?
  - What is the proper scaling of stress versus heat flux?
    - Can accelerated cycle testing be done at higher heat flux?
      (e.g., does twice the heat flux have the same effect on fatigue as ten time more cycles?)

- **Blanket/Shield:**
  Casting of Stainless Steel
  - What is required to qualify cast Stainless steel (316LN IG) for use on ITER?
    - Is irradiation needed?
    - Sample size?

Divertor

- **Issues:**
  - Tolerance of pulsed heat/particle flux
  - Tritium co-deposition

- **What are the alternatives for the plasma-facing surface in the highest-heat-flux regions?**
  - Carbon
  - Tungsten (radiation effects?)
  - Other?

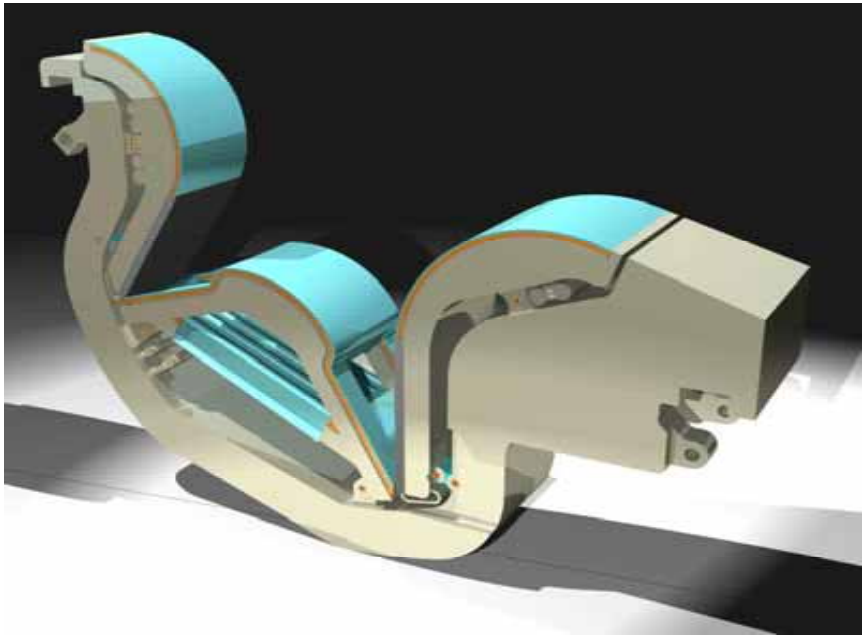

Ion Cyclotron System

- **Bonding of Be to Cu alloy**
  - forming of Be-Cu into Faraday shield elements that can handle steady state operation
  - 12/06

- **Characterization of post-irradiation mechanical and electrical properties of selected ceramics**
  - qualification of high voltage rf capacitor/insulator ceramics.
  - 12/06

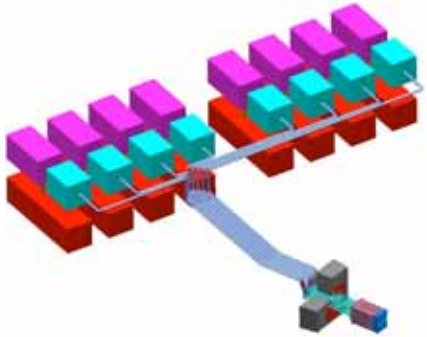

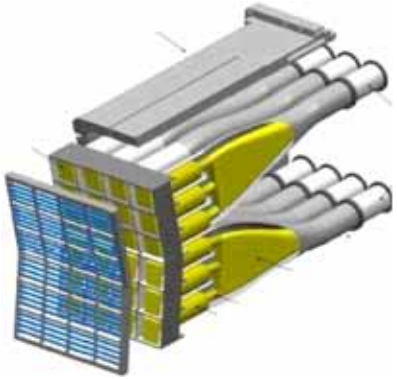

US ITER Diagnostics

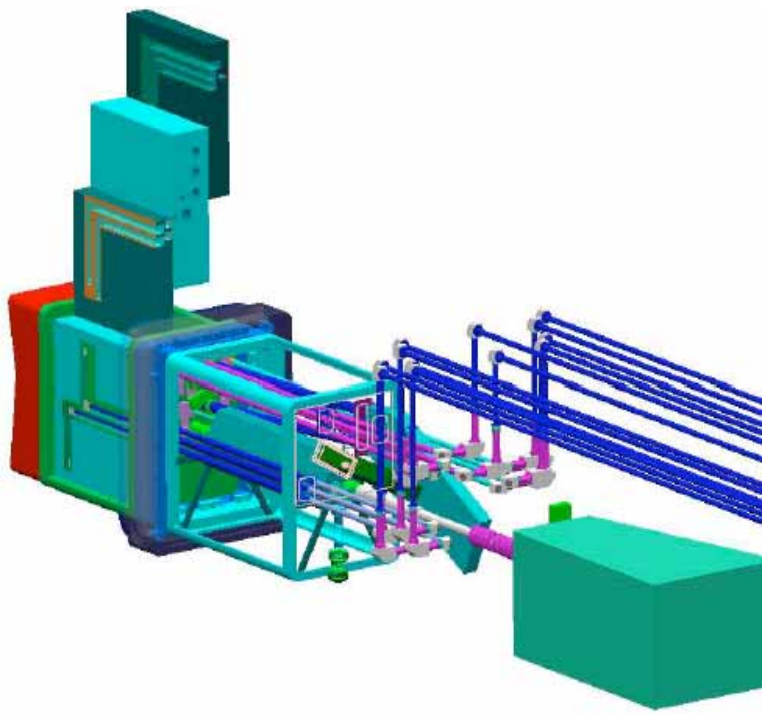

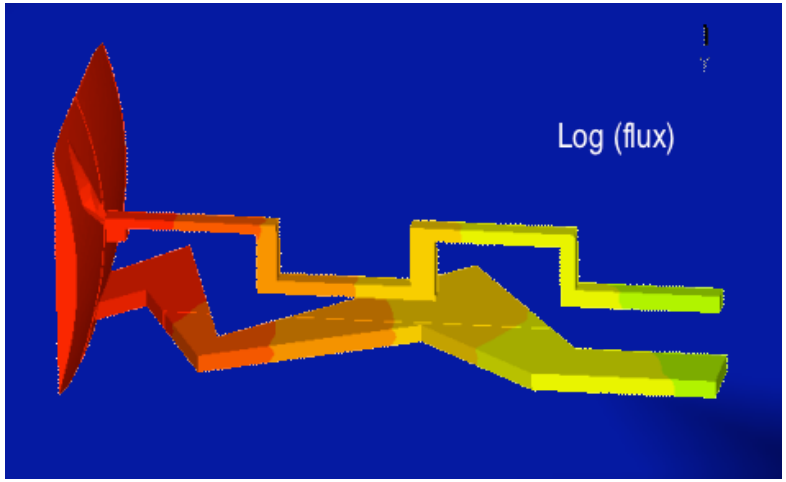

Diagnostics

- **Two of the five high-priority R&D issues identified by the ITPA diagnostics topical group involve materials-related issues:**
  - “Measurement of steady state magnetic fields and irradiation effects on mineral-insulted cables (radiation-hardened Hall probes, Radiation-induced EMF effects, etc.)”
  - “First mirrors (erosion/deposition, including potential for helium blistering and spalling phenomena)”
    - US emphases: MSE and upper visible/IR cameras
    - A parallel approach is needed:
      - A continuation of controlled experiments on existing devices to evaluate erosion and particularly deposition on plasma facing surfaces at locations equivalent to first mirrors on ITER.
      - Development of a simulation code able to predict these effects and to suggest mitigation strategies.
      - Development and prototyping of in-situ cleaning techniques

- **Other areas:**
  - radiation effects database on diagnostic materials and components, including sensors
  - materials assessments for "front-end” actuators,
  - shutter actuators
  - suitability of fiber optics for Motional Stark Effect system, window diagnostics, first mirror optical degradation mitigation techniques,

Test Blanket Modules

Dual Coolant Lead-Lithium TBM Views showing first wall assembly (left), internal poloidal channels (middle) and complete structure (right)

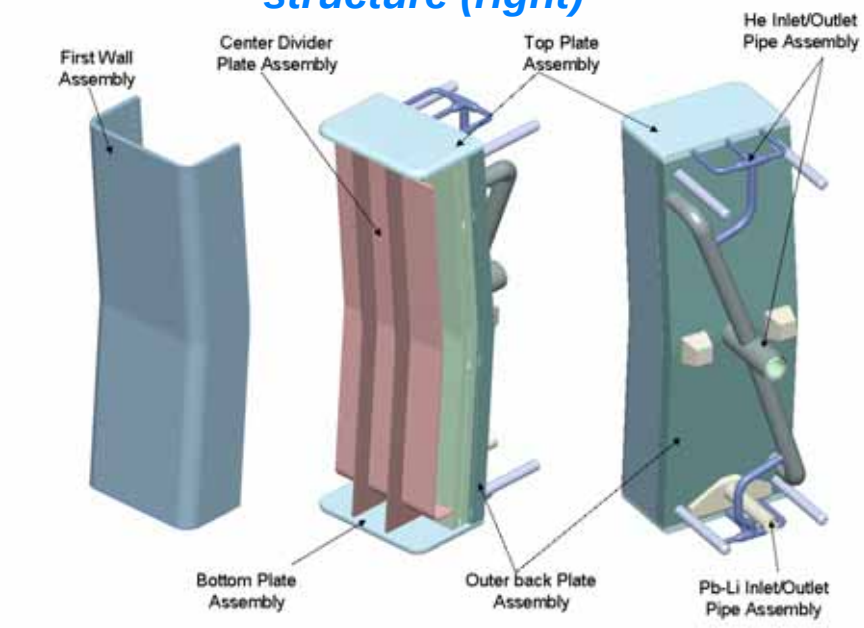

Ferritic Steel, PbLi, He, FCI (SiC or Sandwich type)

Schematic view of three solid breeder thermomechanics unit cell test articles housed inside the EU's Helium-cooled pebble bed box

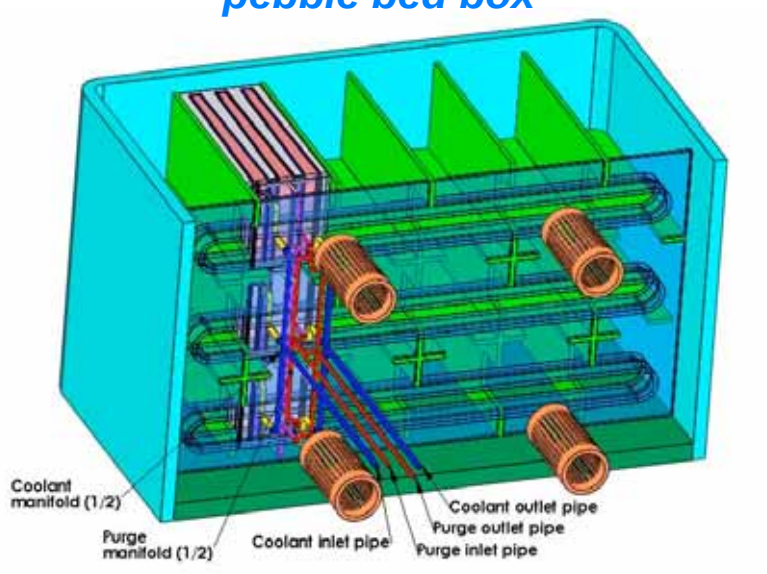

Ferritic Steel, Be, Ceramic Breeder (Li2TiO3 or Li4SiO4), He coolant,

- **Maximum fluence < 0.09 MW*y/m2 (< 1 dpa)** **Neutron wall load: ~ 0.8 MW/m2**
- **Ferritic Steel: maximum temperature < 550°C**
- **Surface heat flux: maximum 0.5 MW/m2 (local) design average 0.3 MW/m2**
- **FS/PbLi interface < 500°C**
- **SiC/PbLi < 600°C (~500°C also o.k.)**

Test Blanket Program
specific tasks

- development of SiC for Flow Channel Insert in the US DCLL concept (primarily insulator, no structural function)

- developing a strategy for fabrication of ferritic steel first wall and structure of the Blanket Test Module (TBM) and whether to procure from industry in France already doing fabrication R&D under EU contract, or from US industry

- provide structural code capabilities and analysis needed for engineering design of TBM

- provide data on compatibility of SiC with PbLi

- contribute to the development of tritium permeation barriers to supplement the EU development

"Details on the specific requirements for the above areas can be found in the US ITER-TBM DDD Report and by contacting the US ITER TBM team."

Bottom Line on Materials

- **Materials are key to many of the US contributions to ITER**
  - The most urgent need is resolution of the Central Solenoid jacket material
  - Be-Cu bonding is an issue that spans several systems (blanket, ICH, diagnostics, …)
  - While not a US provisional scope, the divertor high-heat-flux material is key to ITER success
  - Diagnostic components have materials issues: sensors, mirrors, optical components, cables, shutters, …
  - Test Blanket: compatibility of SiC with PbLi, ferritic steel, …
- **The US needs to develop and maintain an appropriate partnership between US-ITER and the VLT materials expertise**

Structure of this talk

VLT scopes in FY06

VLT scopes in FY07 and beyond

- FY07-14 ITER construction
- FY15-35 ITER exploitation

FY07 and beyond

- **FY07-~10:**
  - USIPO conducts strong ITER R&D and design
- **FY10-14:**
  - USIPO conducts US ITER engineering-follow and acceptance testing
- **FY15 and beyond: Technology research on ITER**
  - US ITER Operations supports commissioning and operations
  - VLT uses ITER as a tool for technology research

The VLT roles FY07+ from the USIPO perspective (1 of 2)

- **The VLT should be the US repository of expertise in technology areas**
  - The USIPO and the international ITER Organization will benefit from access to a strong base technology program
    - Advice on technical challenges
    - State-of-the-art research and innovations reveal new avenues
  - The VLT must be among the leaders in key areas (the key is selection of areas for US focus, p erforming leading work and enabling mobility to areas of discovery elsewhere)

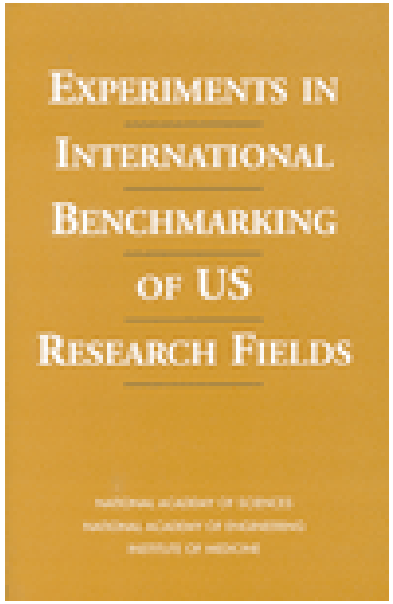

The VLT roles FY07+ from the USIPO perspective (2 of 2)

- **ITER will provide research opportunities to the VLT**
  - The ITER R&D, design and fabrication activity will provide opportunities to the VLT beyond those otherwise available
  - ITER research operations will make available a reactor-scale burning plasma facility for technology research
- **The relationship between the VLT and ITER should be bi-directional, exploiting synergies and providing mutual support and opportunities**

Bottom Line…

- **The VLT and the US ITER Project are partners**
  - In FY06, transitioning from VLT support of R&D… to USIPO support
  - In FY07-14, working together on generic topics
  - In FY15-35, exploiting ITER for technology research
- **We need to refine our joint work in FY06**
  - VLT scope ~$6.6M, transitioning to USIPO in ~May 2006
- **The US ITER Project Office recognizes the value of the VLT as the US repository of expertise in technology areas**
  - The major challenge will be selecting the affordable narrow areas for focus which perform world-class work and enable mobility to areas of discovery
- **The VLT should position for technology research on ITER**