Analysis on MHD pressure drop in remountable first wall design

Hidetoshi Hashizume[a],
Yoshiaki Usui[a]
Masaaki Satake[a],
Akio Sagara[b]
[a]*Advanced F.R.Eng. Lab., Tohoku University*
[b]*National Institute for Fusion Science*

2003 US-Japan Workshop
July 28-31, 2003 Port Townsend, Washington, USA

Workshop Agenda

1. Introduction

Present design of fusion reactor

- complicated structure

Problems of
- Construction cost
- Maintenance cost

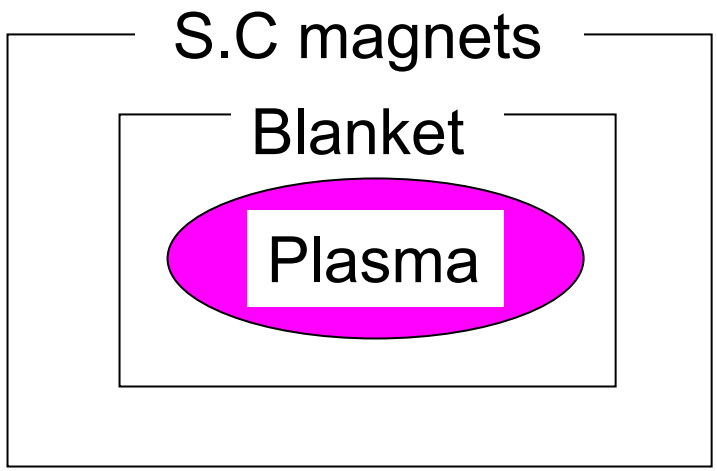

+ Aggressive technology

Fusion reactor
- Remountable SC magnet
- Remountable first wall/blanket

Concept of Remountable SC Magnet

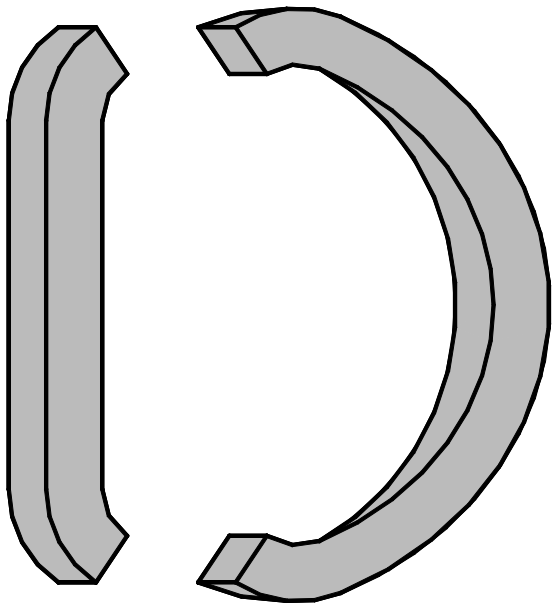

Troidal Field Coil

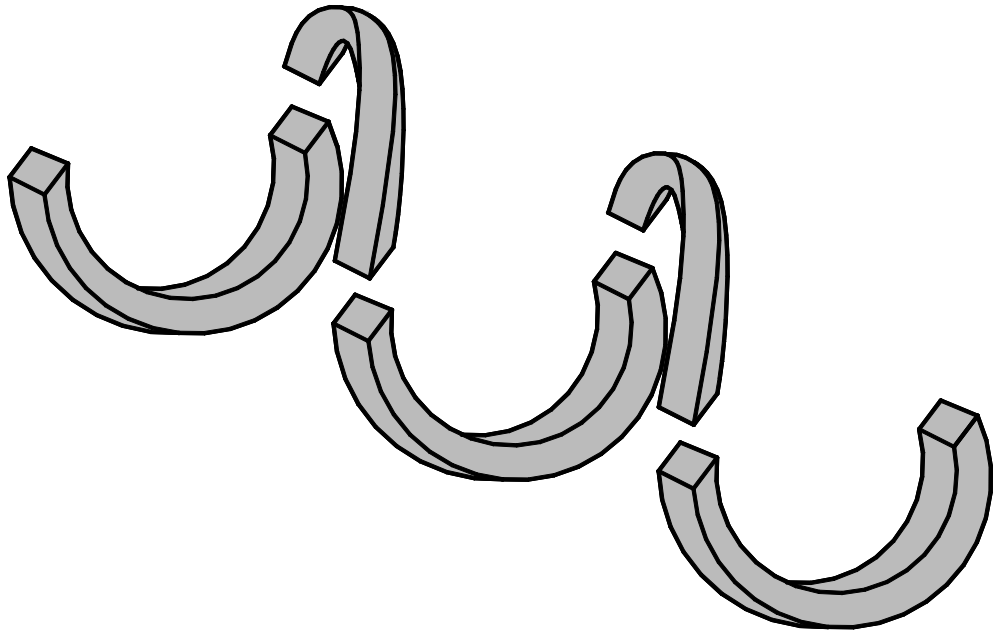

Helical Coil

- SC Materials ⇒ HTc Superconductor
  (Mechanical butt jointing with heat generation)
- Contact Force ⇒ Electromagnetic Force

Concept of remountable first wall/blanket system

Advanced Fusion Reactor Engineering
Tohoku University, JAPAN

ℵ Feature

- Coolant ⇒ Flibe, Li
- Most of ribs are not welded

↓

Easiness in coating

Remountable first wall

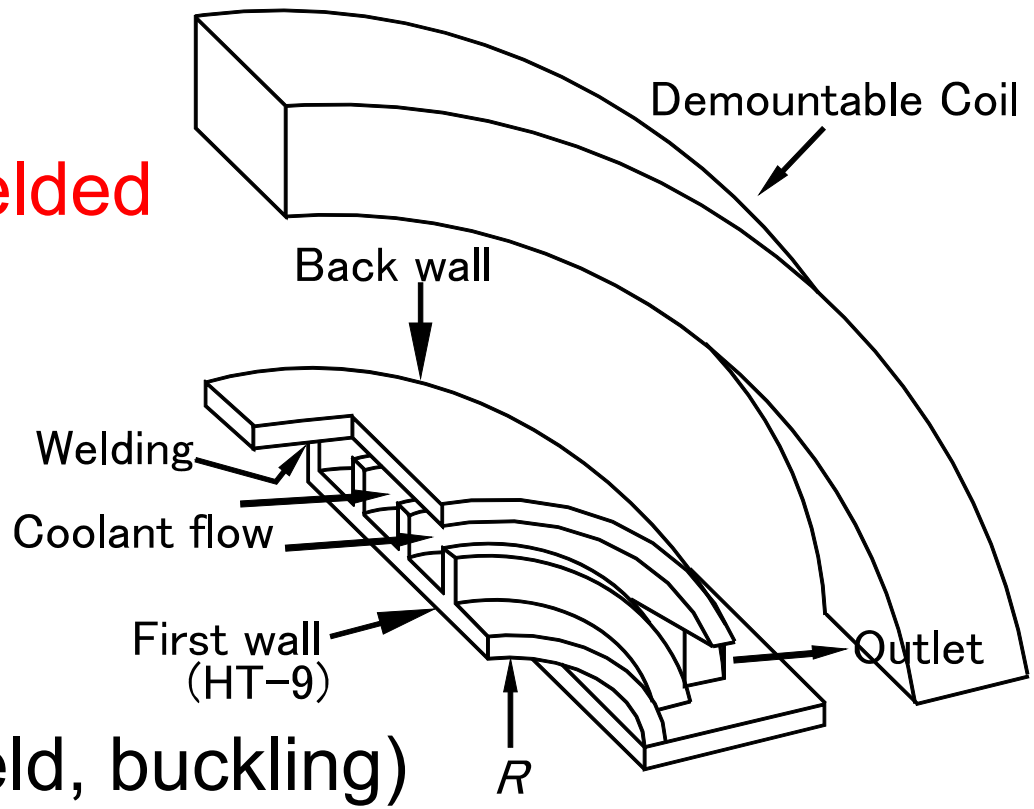

ℵ Previous study

Structural integrity (yield, buckling)

- Mechanical stress
- Coolant pressure

⇒ $\sigma_{max} = 350\text{MPa}$

$\Delta P / \Delta z \approx 4\text{x}10^3\text{Pa/m}$

Cross section of channel

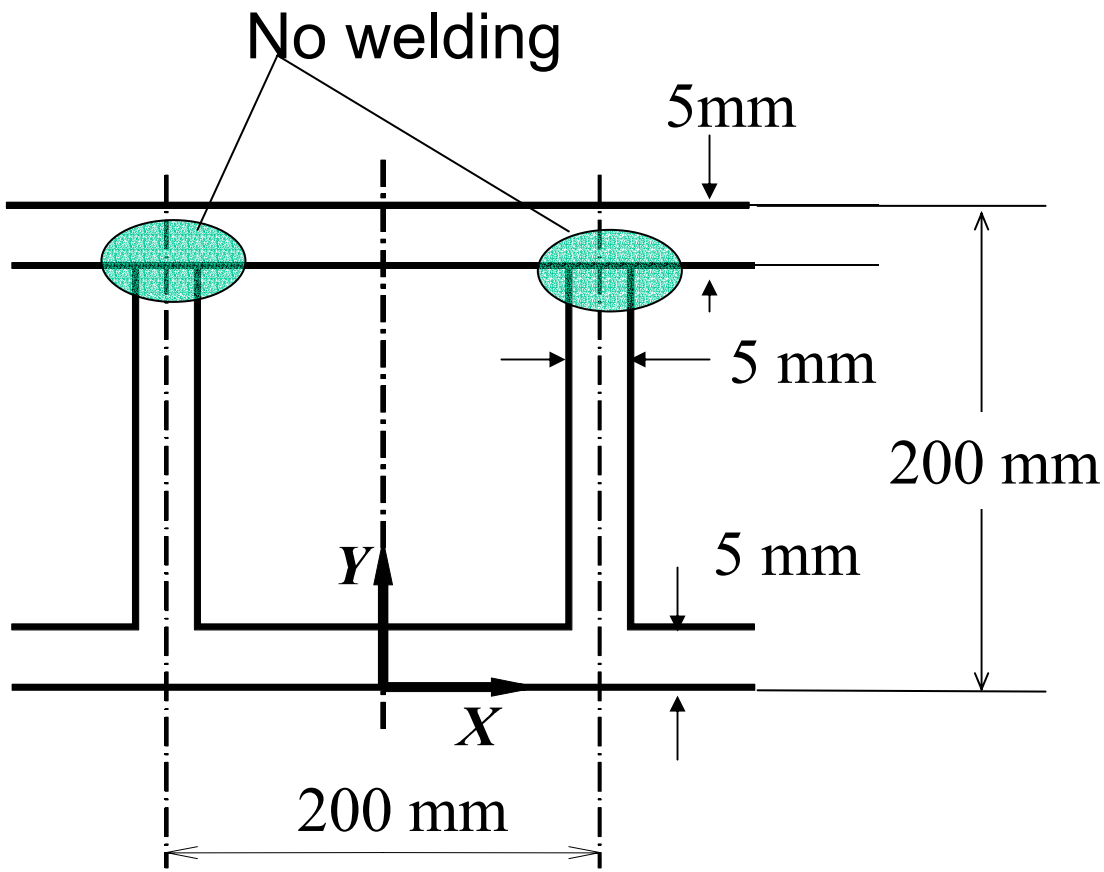

Surface coating

(a)Rib surface coating (new concept)

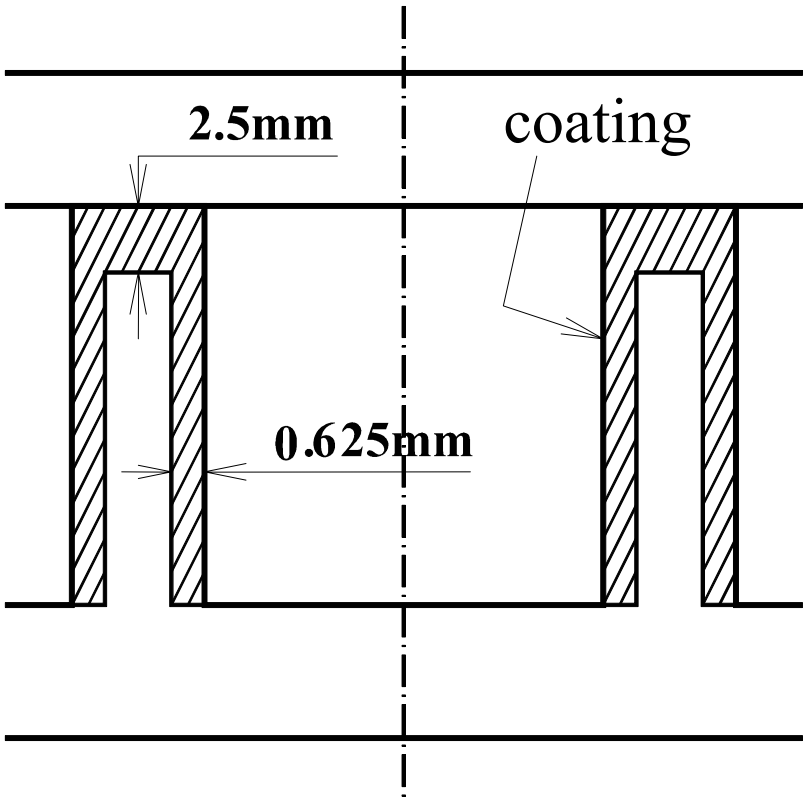

(b) Three surface coating (conventional)

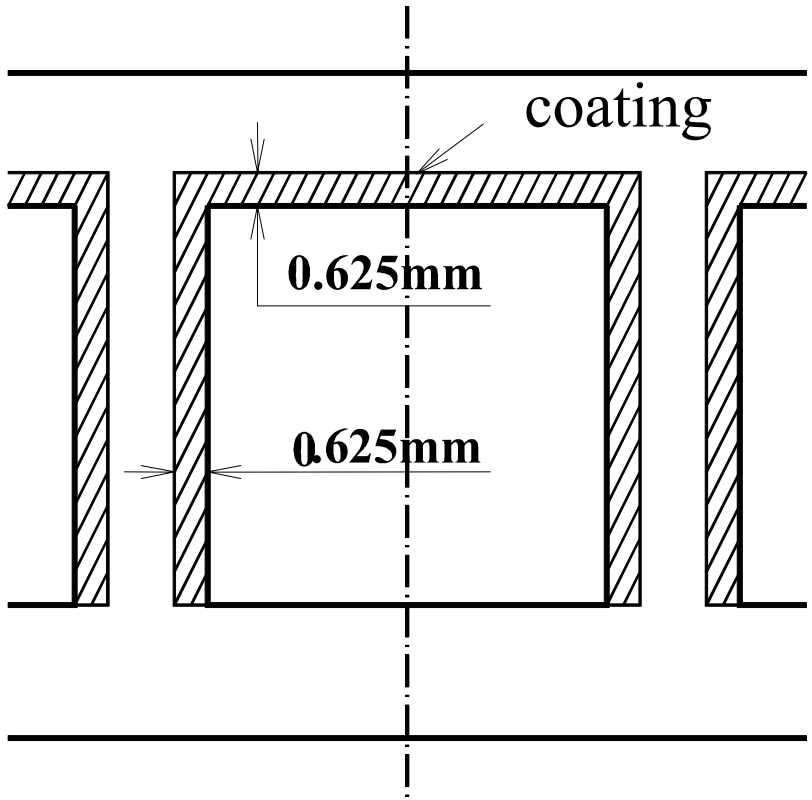

Parameters

	v [m/sec]	ρ[kg/m^3]	μ[Pa sec]	σ[S/m]
lithium	0.15	482	3.30×10^{-4}	3.0×10^{6}
Flibe	1.25	2020	1.87×10^{-2}	1.6×10^{3}
HT-9	-	-	-	4.0×10^{6}

Pressure drop(6T)

Advanced Fusion Reactor Engineering
Tohoku University, JAPAN

(1) **FLiBe** (***v***=1.25[m/s])

log ($\sigma_i/\sigma_{HT\text{-}9}$)	Rib surface coating	Three surface coating
0	7.26×10^3	7.26×10^3
-3	6.87×10^3	7.25×10^3
-6	2.30×10^3	2.73×10^3
-9	3.30×10^2	3.44×10^2

unit:[Pa/m]

(2) **Lithium** (***v***=0.15[m/s])

log ($\sigma_i/\sigma_{HT\text{-}9}$)	Rib Surface Coating	Three Surface Coating
0	1.22×10^5	1.22×10^5
-3	2.14×10^4	8.70×10^4
-6	9.94×10^2	2.74×10^3
-9	2.94×10^2	2.96×10^2

unit:[Pa/m]

2. Velocity profiles (*B*=10[T])

[1] Flibe

(a) Without Insulator

(b) Coated with Insulator

$$\left(\sigma_{\mathrm{i}} / \sigma_{\mathrm{HT-9}} = 10^{-9} \right)$$

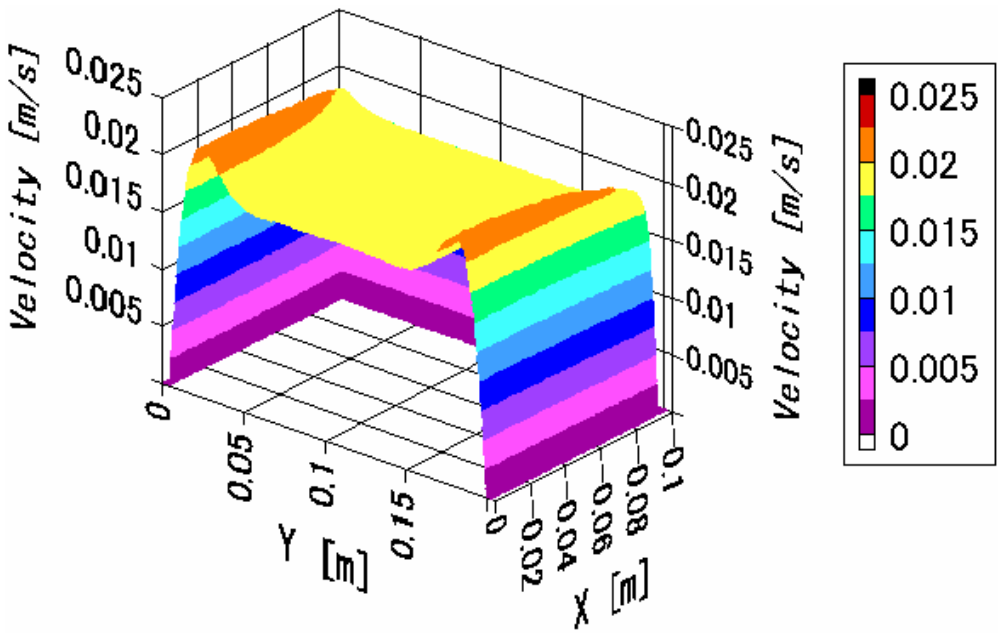

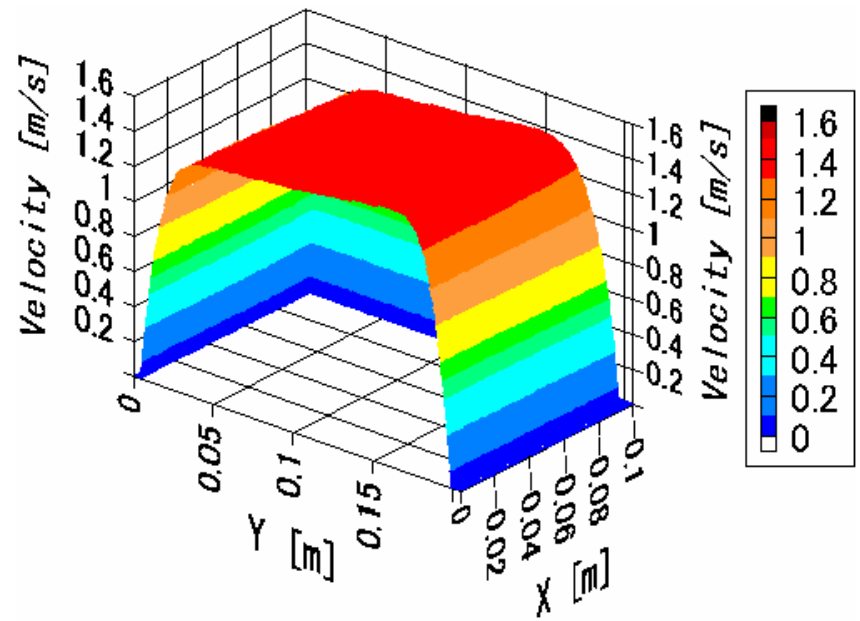

M-shape

Flat-shape

[2] Lithium

(a) Without Insulator

(b) Coated with Insulator

$$\left(\sigma_{\mathrm{i}} / \sigma_{\mathrm{HT-9}} = 10^{-9} \right)$$

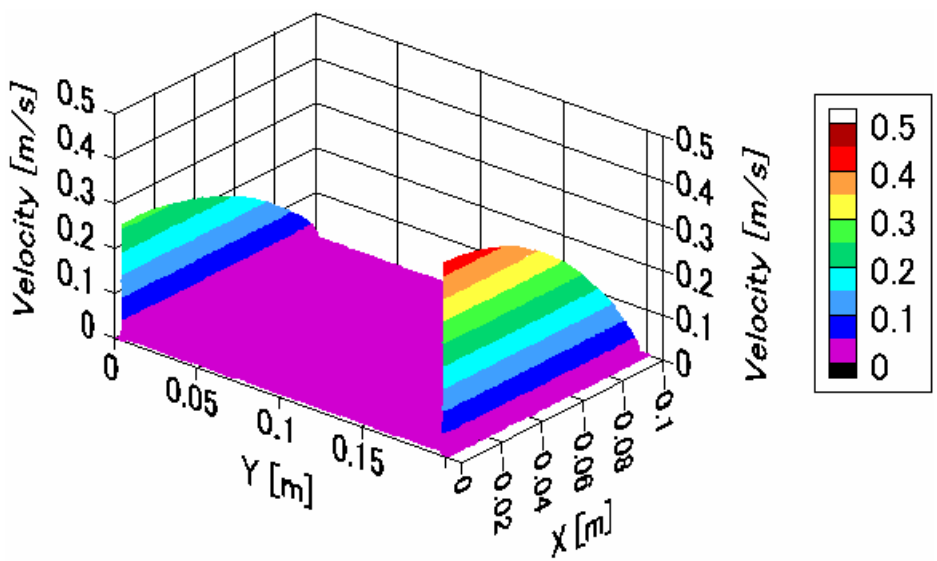

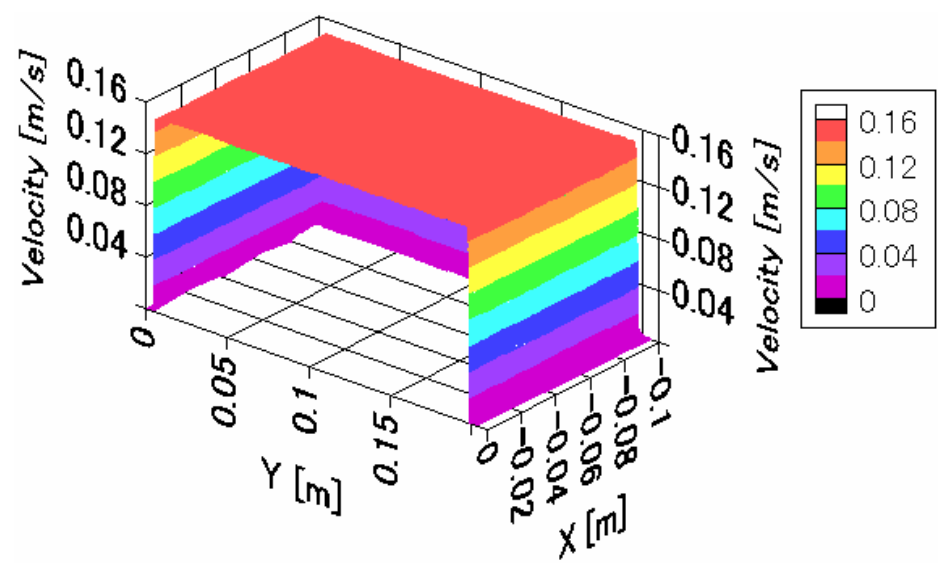

M-shape

Flat-shape

- # Four channels model

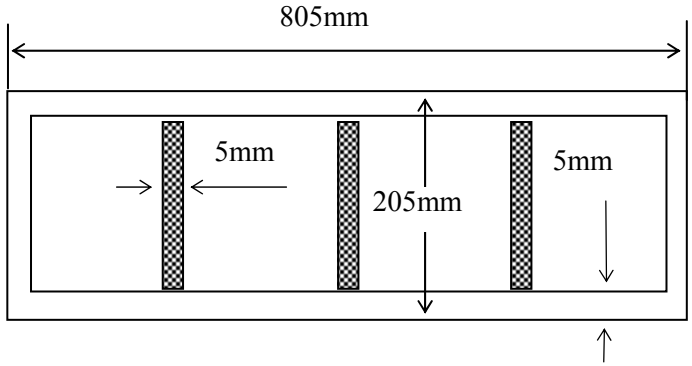

Model (a) (insulator ribs)

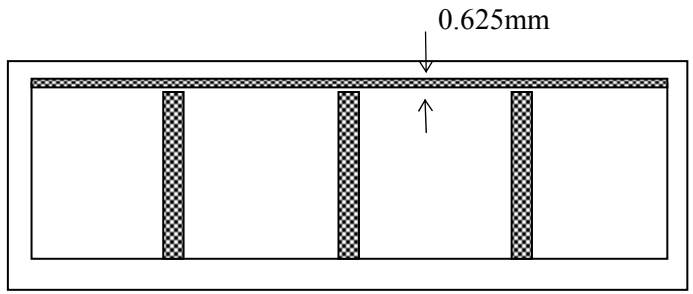

Model (b)(+ coated back wall)

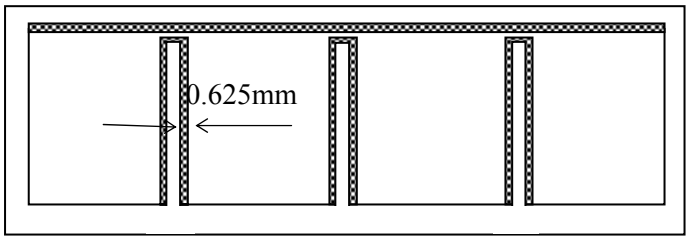

Model (c)
(coated ribs and back wall)

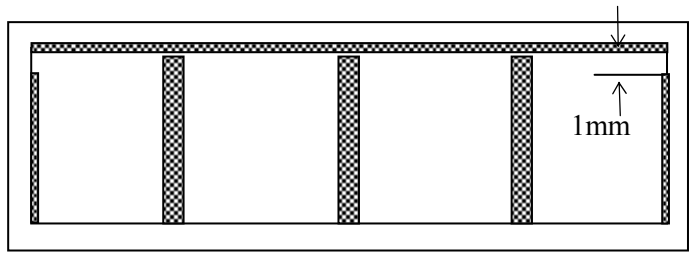

Model (d)
(+ coated end ribs)

Table 2 Pressure drop in various coating method (lithium)

(unit : kPa/m)

$\sigma_{insulator}/\sigma_{HT\text{-}9}$	1	10^{-3}	10^{-6}	10^{-9}
Ideal case of (c)	339	49.1	2.12	0.49
Model (a)	339	60.5	53.4	58.4
Model (b)	339	58.7	6.88	1.01
Model (c)	339	127	9.95	1.01
Model (d)	339	48.1	6.68	1.02

Numerical results

- MHD pressure drop is still large in comparison with the allowable pressure drop.
- Issues we must improve

  1) low flow rate

  2) small allowable pressure

  3) relatively large MHD pressure drop

↓

Introduction of <u>structural bar</u> perpendicular to the flow passing through the ribs

New design of FW/Blanket system

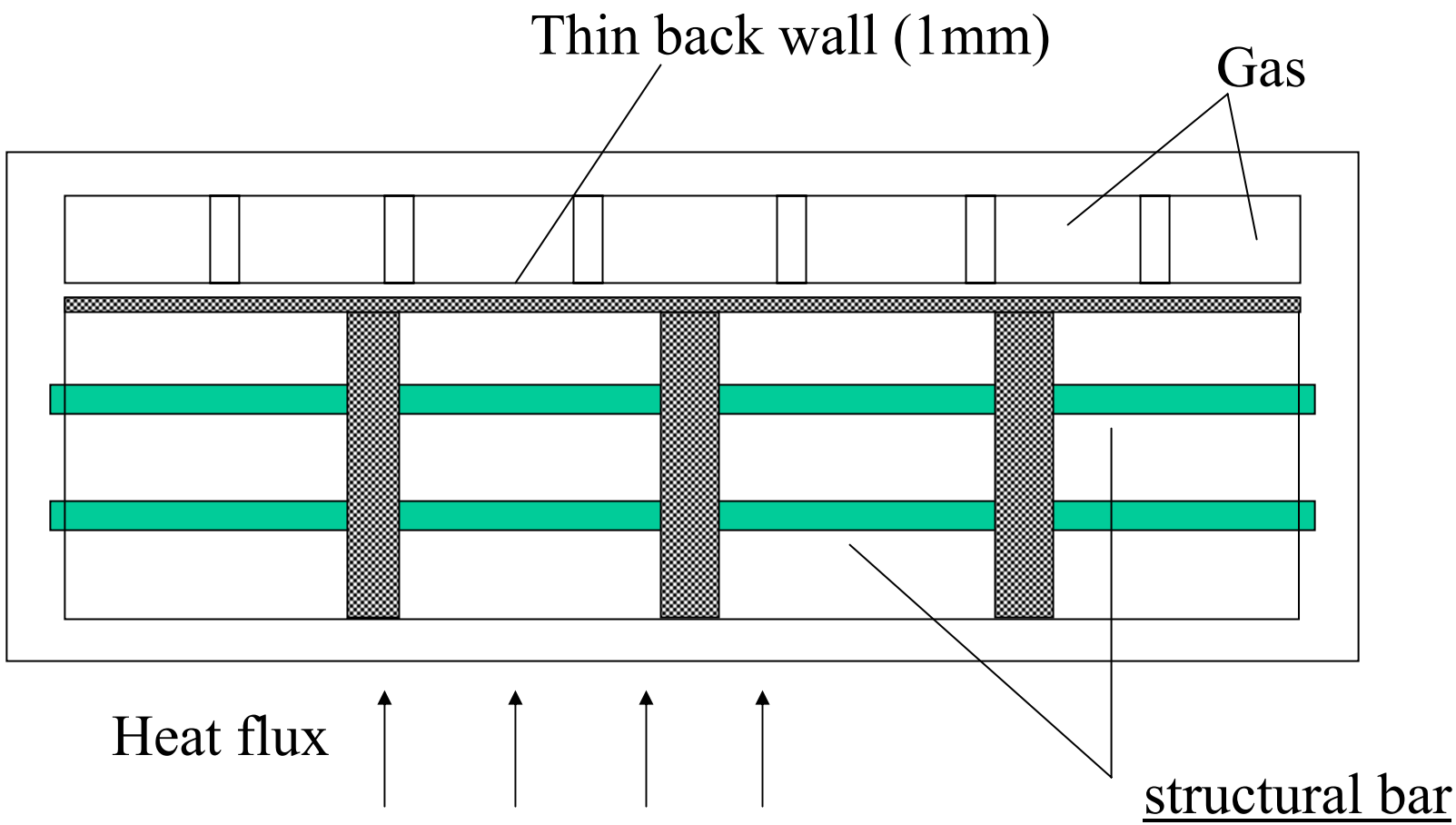

MHD pressure drop(without structural bars) (1m/sec Li, 10T)

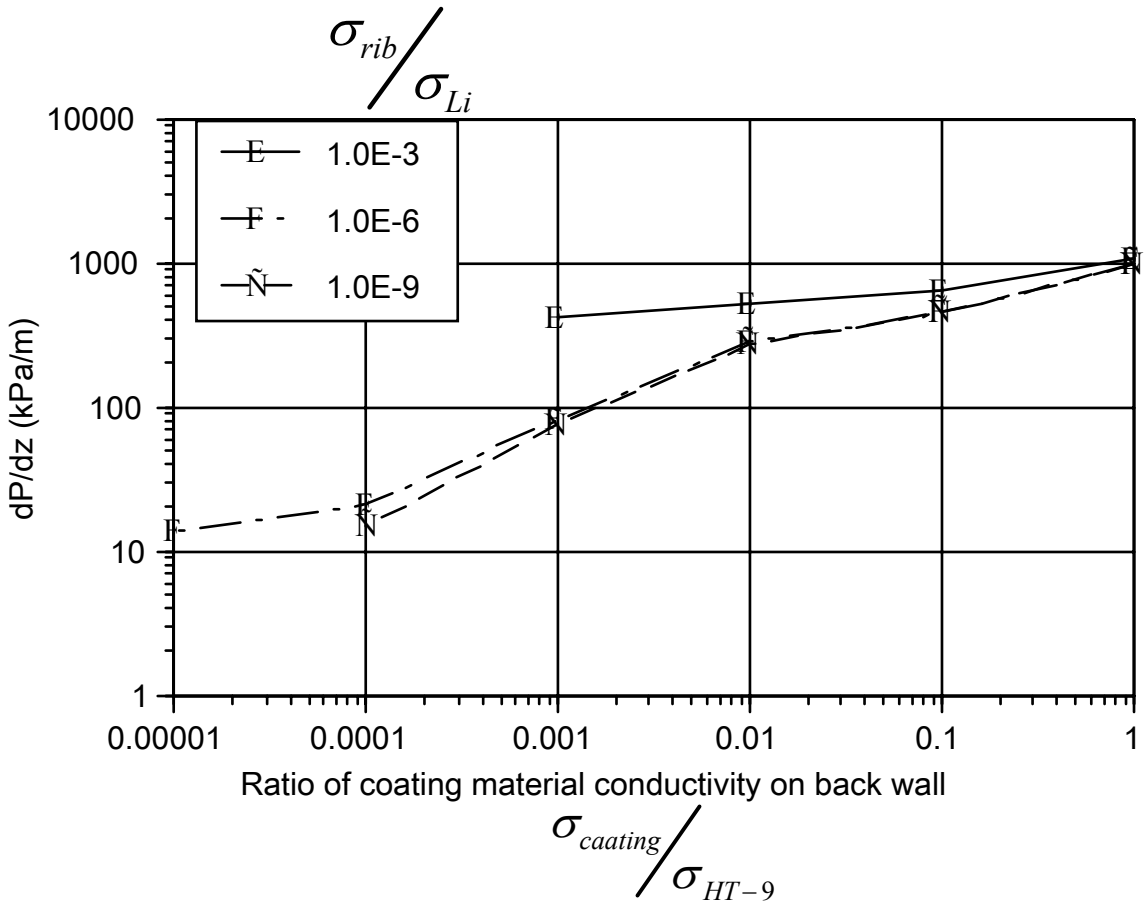

- Ratio of coating material conductivity

$$\sigma_{caating} / \sigma_{HT-9} \approx 10^{-4}$$

Crack ratio

$$\approx 10^{-4} \frac{\sigma_{HT-9}}{\sigma_{Li}} \approx 10^{-4}$$

Heat transfer enhancement

Numerical result using molten salt

↓

Structural bars induce vortex flow to increase the heat transfer by three times

Structural integrity →

Precise evaluation is necessary

Conclusions

- The numerical results indicate that combination of insulated ribs and insulated back wall show good performance even in the case of four channels, where the current path through the back wall is taken into account.
- Introduction of structural bars can bring many benefits like increase of allowable pressure and increase of heat transfer. These effects can give us some design window for Li blanket system.