High-Fidelity Depletion Capabilities of the SCALE Code System Using TRITON

Mark D. DeHart

Nuclear Science and Technology Division

Oak Ridge National Laboratory

Overview

- The TRITON depletion sequence within SCALE.
- Continuous-energy resonance processing via CENTRM/PMC.
- Rigorous 2D deterministic transport calculations using NEWT.
- Comprehensive depletion/decay estimates with ORIGEN-S.
- TRITON depletion using Monte Carlo methods.

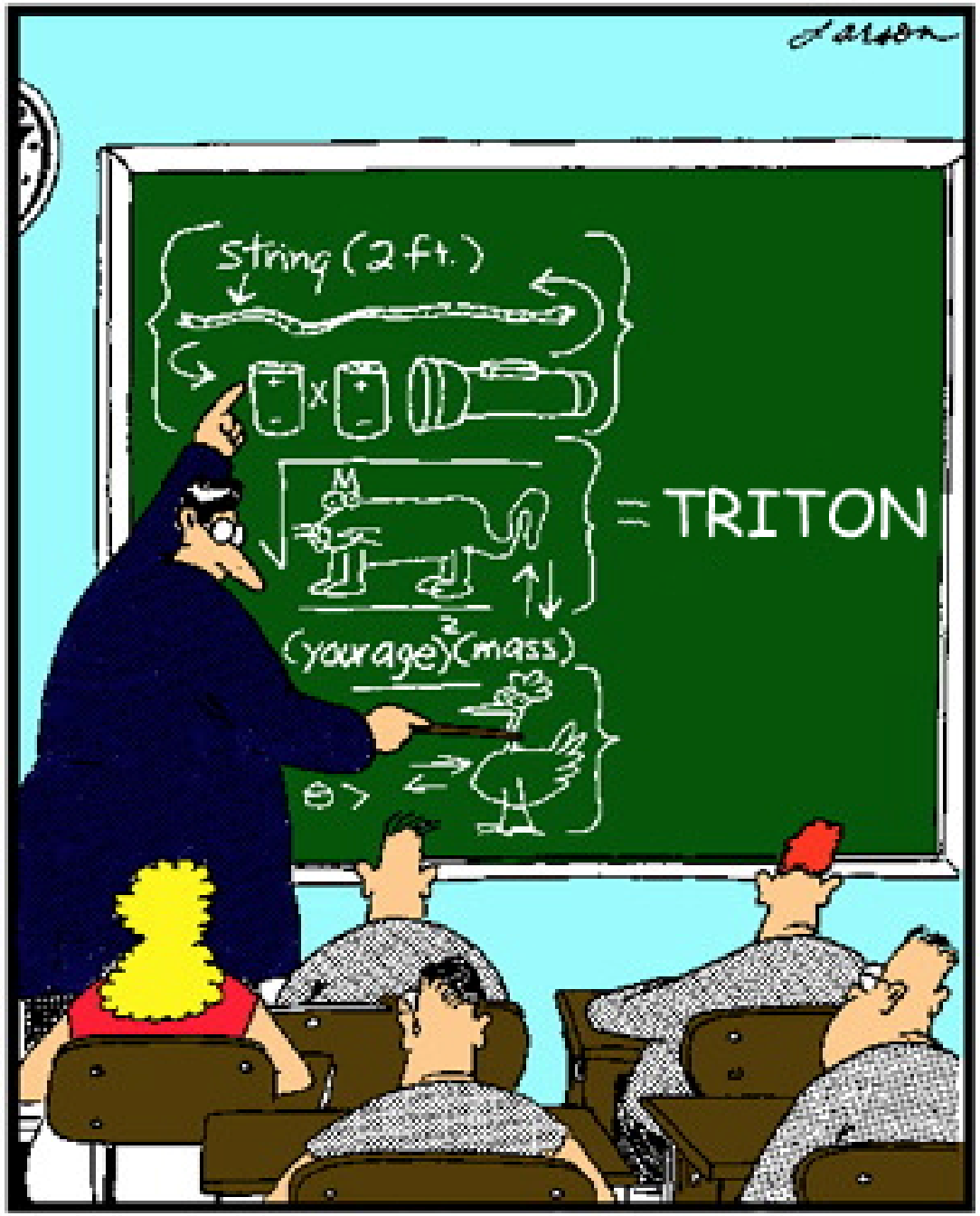

TRITON Explained

The TRITON Depletion Sequence

- **Control sequence within the SCALE code system, built around a set of powerful and highly accurate functional modules.**
  - **BONAMI/CENTRM/PMC (cross section processing)**
  - **ORIGEN-S (Point depletion/decay)**
  - **Multiple Transport Solver Options:**
    - **NEWT (2D arbitrary-geometry S_n transport)**
    - **KENO V.a and KENO-VI (3D Monte Carlo transport)**

The TRITON Depletion Sequence

- **TRITON controls execution and data handling for time-dependent depletion sequences.**
- **Multigroup cross sections prepared for transport calculation**
- **Transport calculation generates local fluxes to collapse cross sections for ORIGEN-S update**
- **Transport calculation also determines power distribution among depletion mixtures**
- **ORIGEN-S performs point depletion for each depletion mixture using local xsecs and fluxes.**

TRITON t-depl Sequence With Branches

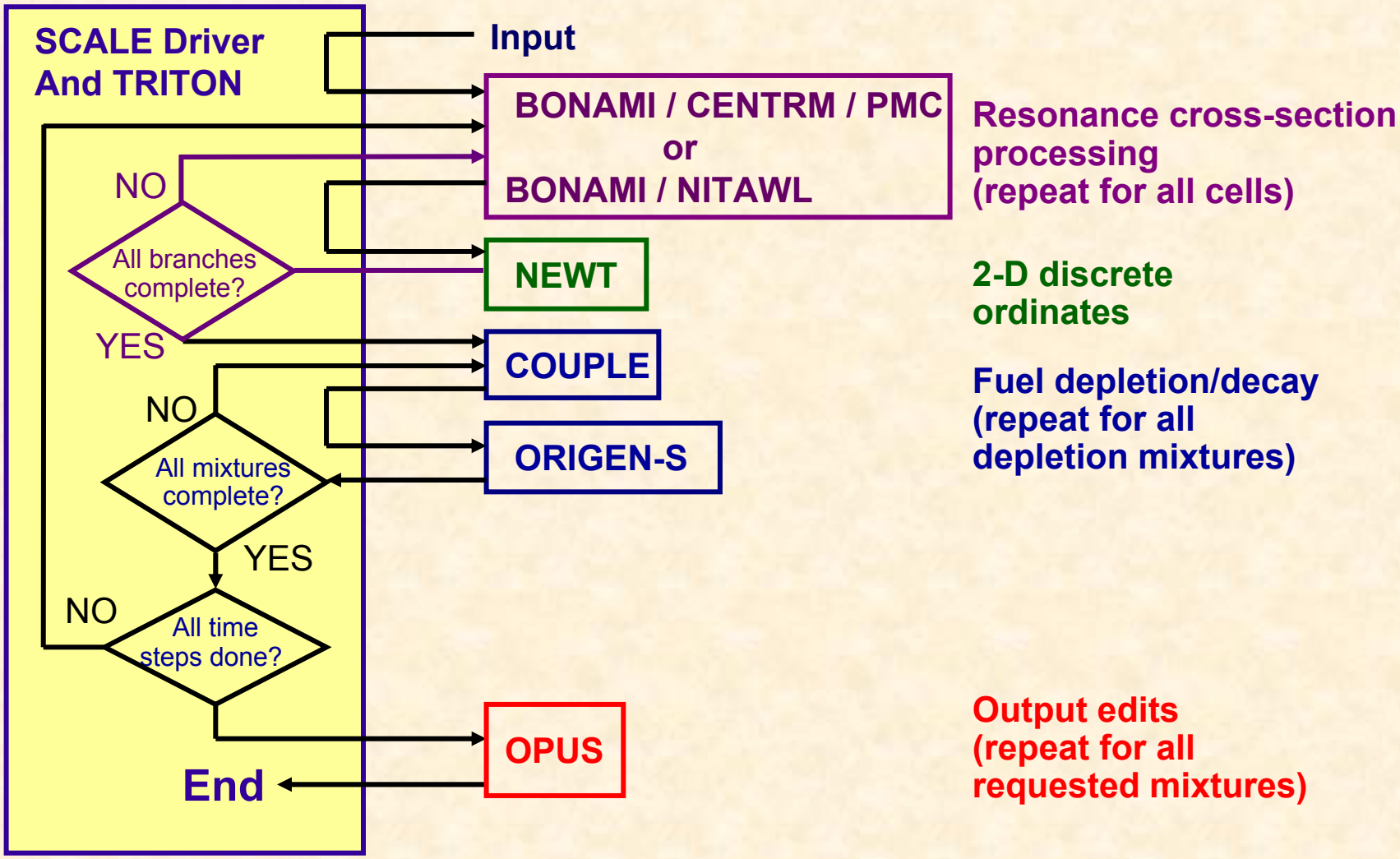

Continuous-energy resonance processing via CENTRM/PMC

- **CENTRM: Continuous ENergy TRansport Module**
  - **Computes space-dependent, continuous-energy neutron spectra for 1-D model of critical system**
- **PMC: Process Multigroup Cross sections**
  - **Computes problem-dependent cross sections using flux spectrum from CENTRM**

Features of CENTRM

- **Solves 1-D discrete ordinates transport equation using pointwise cross section data to obtain continuous-energy angular flux spectra**
- **Computes full energy-range spectrum (not just in resolved range)**
  - **pointwise in resonance energy range**
  - **multigroup in fast and thermal ranges**
  - **pointwise is an option in thermal ranges**
- **Pointwise data pre-processed directly from ENDF/B specs (no assumption of SLBW)**

Features of CENTRM (Cont.)

- **Generates problem-specific energy mesh that accounts for resonance overlap**
- **Includes general space and temperature variation in materials**
- **Point cross sections are automatically temperature-corrected.**
- **Computes anisotropic scatter source for s-wave elastic & inelastic reactions using pointwise flux and analytical scatter kernel**

LWR Spectrum: Fine-Structure Detail

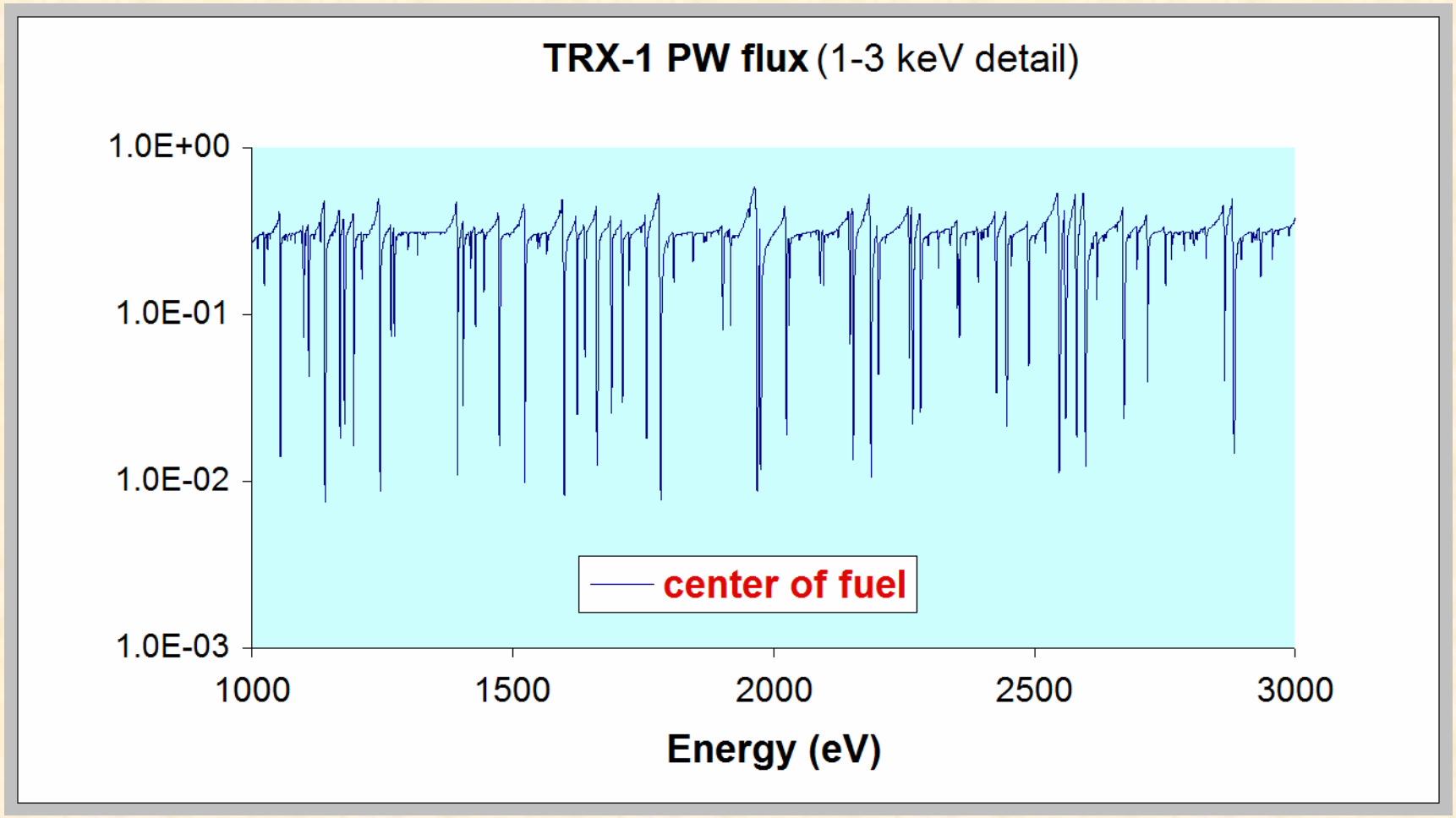

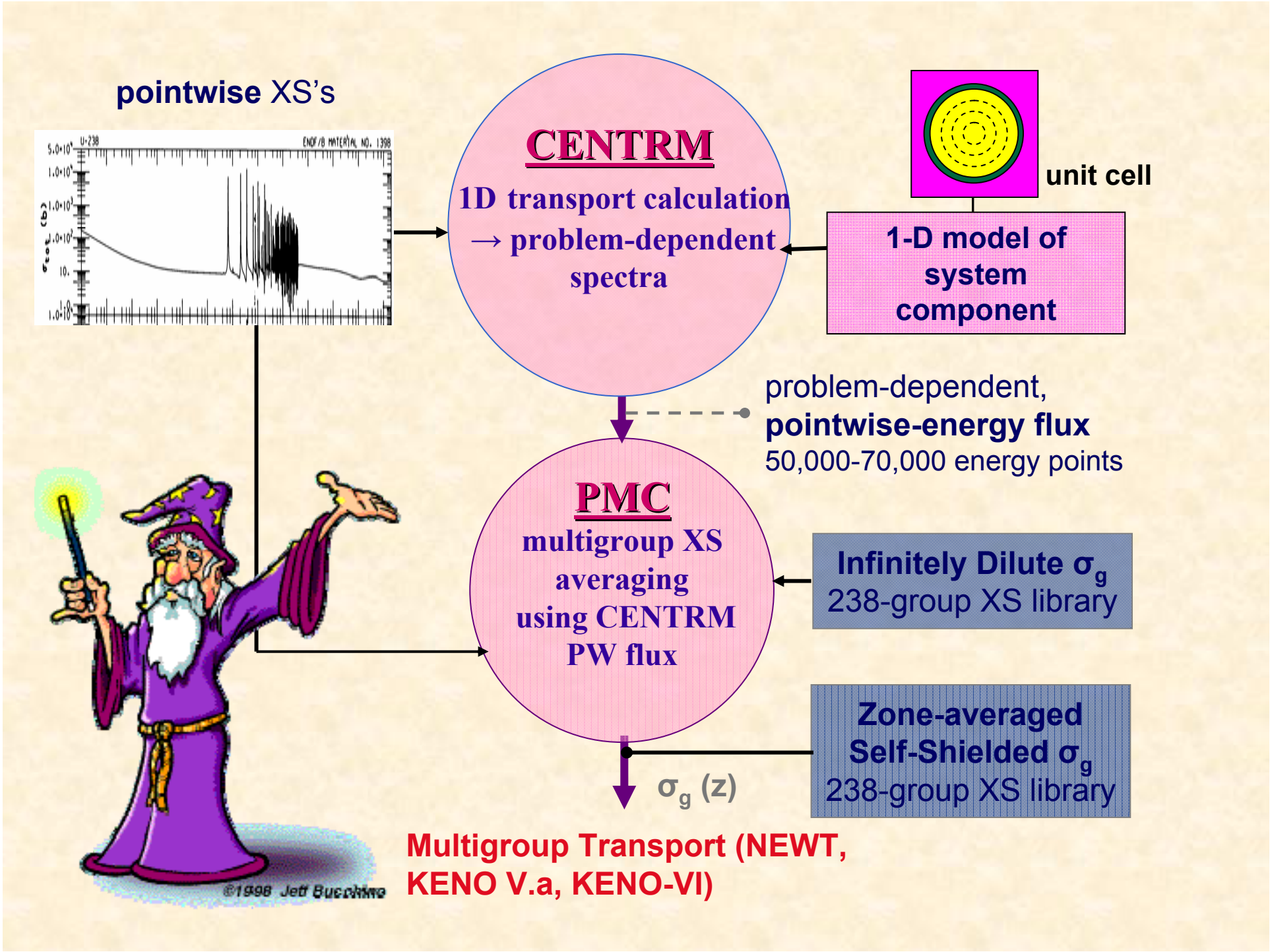
pointwise XS's
U-238
ENDF/B MATERIAL NO. 1398
CENTRM
1D transport calculation
→ problem-dependent
spectra
unit cell
1-D model of
system
component
problem-dependent,
pointwise-energy flux
50,000-70,000 energy points
PMC
multigroup XS
averaging
using CENTRM
PW flux
Infinitely Dilute σg
238-group XS library
Zone-averaged
Self-Shielded σg
238-group XS library
σg (z)
Multigroup Transport (NEWT,
KENO V.a, KENO-VI)
©1998 Jeff Buckner

TRITON t-depl Sequence With Branches

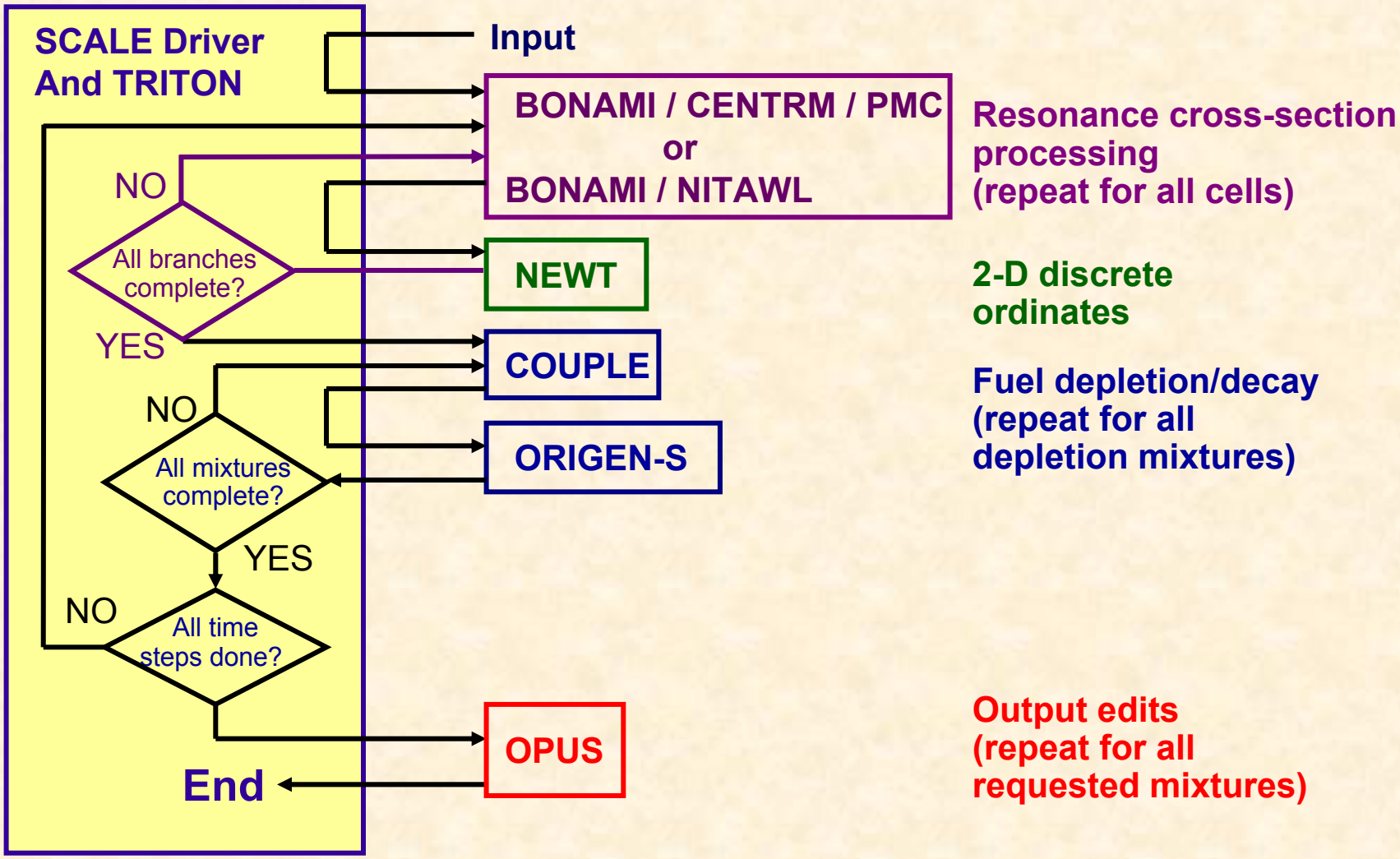

Rigorous 2D deterministic transport calculations using NEWT

- **NEWT provides a discrete ordinates solution for arbitrary, non-orthogonal 2D configurations**
  - **Discrete ordinates methods are the most rigorous approximation to the transport equation**
  - **Direct solution of angular fluxes allows capture of important anisotropic effects**
- **NEWT uses Extended Step Characteristic discretization:**
  - **Allows cells in the form of arbitrary polygons**
  - **Able to closely approximate any curved surface (with volume conserved)**

NEWT's Body-Based Grid

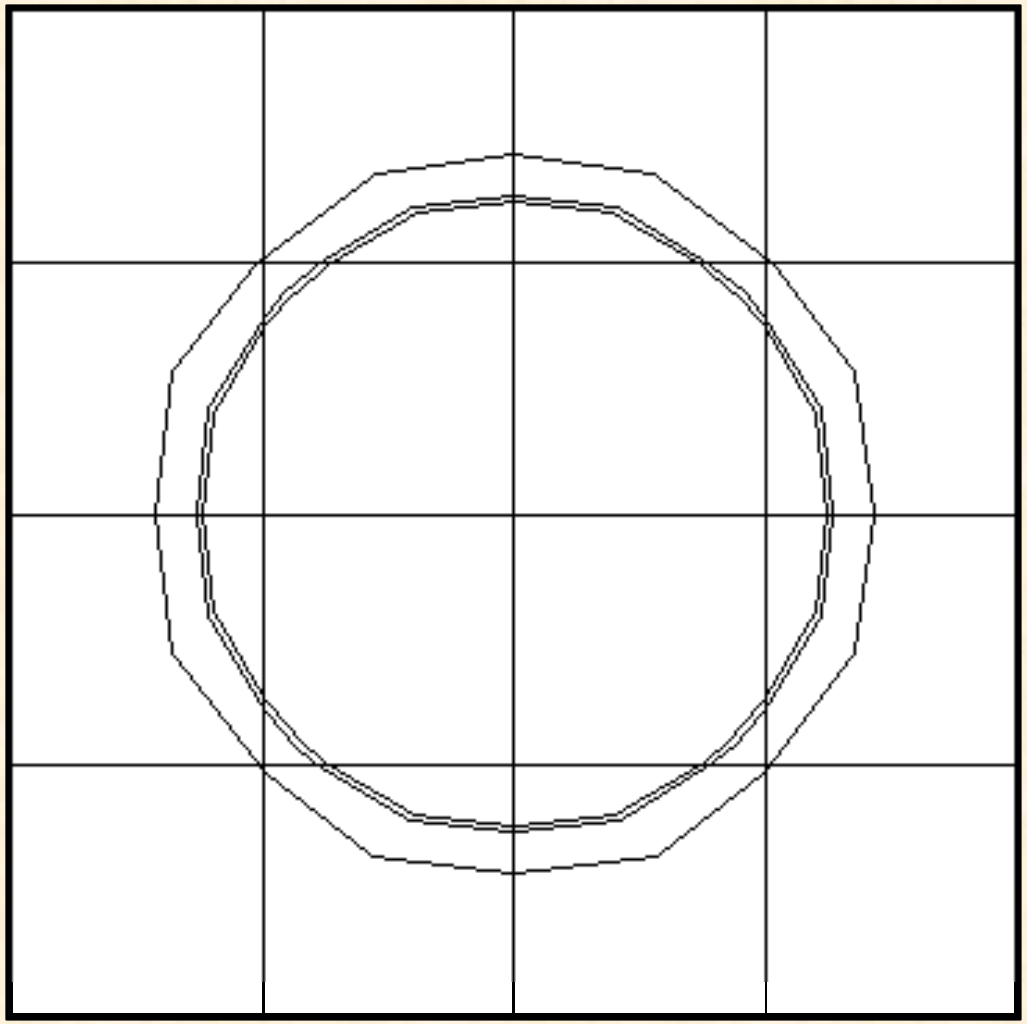

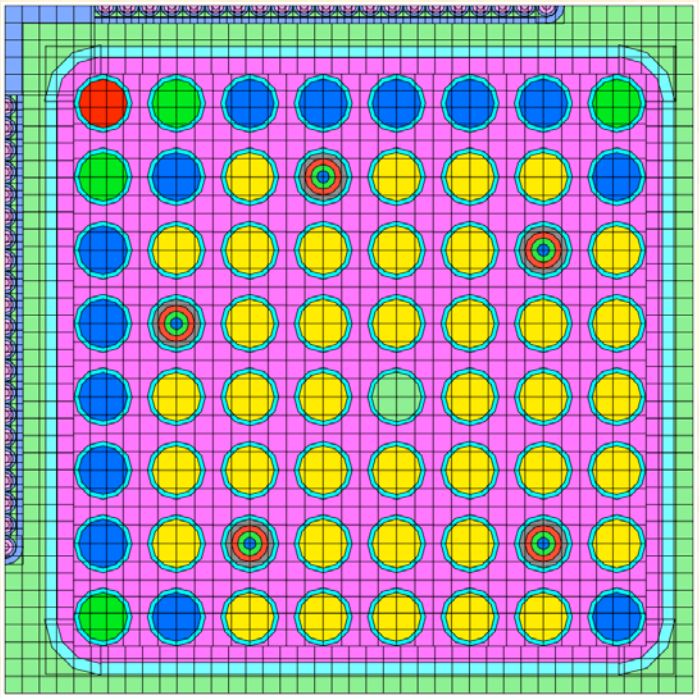

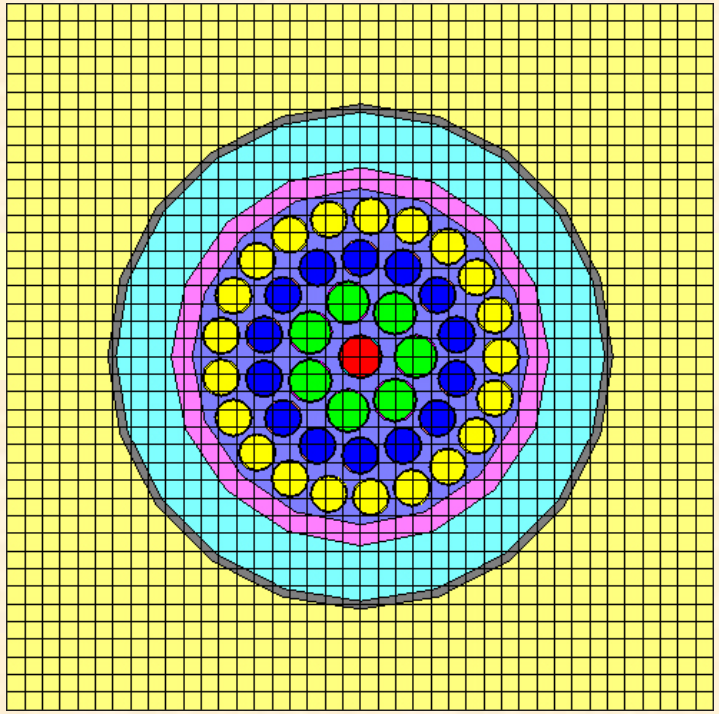

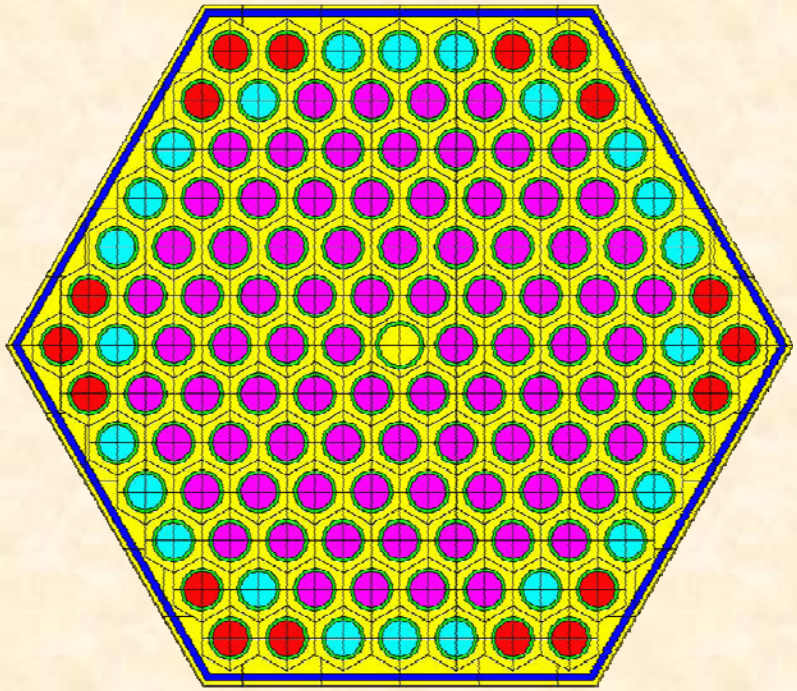

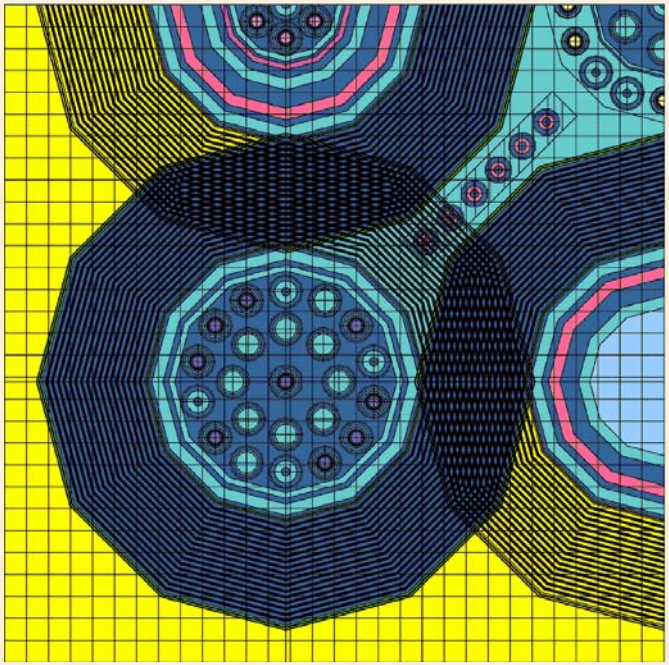

The Rigor of NEWT

- **The NEWT solution grid is generated automatically from a body-based combinatorial geometry spec (SGGP).**
  - **All the geometry power of Monte Carlo in 2D**
- **NEWT uses the discrete ordinates method, allowing detailed angular and spatial resolution of fluxes.**
  - **Arbitrary order of scattering (P_n approximation)**
  - **Arbitrary quadrature order**
  - **Multigroup energy solution**
  - **A rigorous and highly accurate deterministic solution for non-trivial configurations**

Discrete Ordinates Nature of NEWT

$$\Omega \cdot \nabla \psi(r,E,\Omega) + \sigma_t(r,E) \cdot \psi(r,E,\Omega)$$

$$= \chi(r,E) \int_E \nu(r,E')\sigma_f(r,E') \left(\int_\Omega \psi(r,E',\Omega) d\Omega \right) dE'$$

$$+ \int_E \int_{\Omega'} \sigma_s(r,E' \to E, \Omega' \to \Omega) \psi(r,E',\Omega') d\Omega' dE' + Q_{ext}(r,E,\Omega)$$

$$\underline{\underline{\Omega \cdot \nabla \psi(r,E_i,\Omega_j)}} + \bar{\sigma}_t(r,E_i) \cdot \psi(r,E_i,\Omega_j)$$

$$= \bar{\chi}(r,E_i) \sum_k \nu(r,E_k) \bar{\sigma}_f(r,E_k) \left(\sum_j \psi(r,E_k,\Omega_j) w_j \right)$$

$$+ \sum_k \sum_l \bar{\sigma}_s(r,E_k \to E_i, \Omega_l \to \Omega_j) \psi(r,E_k,\Omega_l) + Q_{ext}(r,E_i,\Omega_j)$$

TRITON t-depl Sequence With Branches

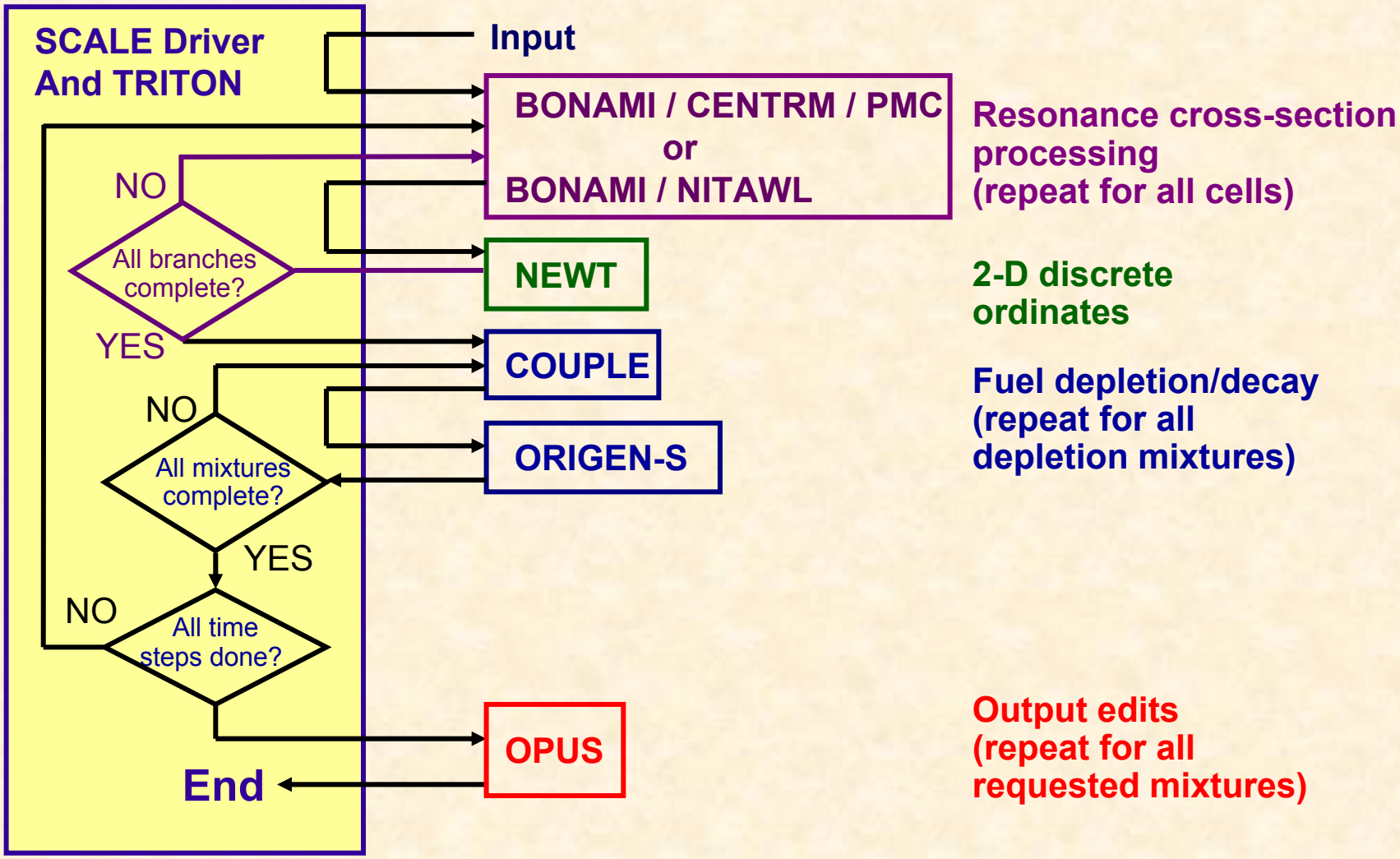

Comprehensive depletion/decay estimates with ORIGEN-S

- **ORIGEN-S is the Oak Ridge Isotope Generation code developed for SCALE code system**
- **Irradiation and decay simulation code**
- **Explicit simulation of 1484 unique nuclides (1946 nuclides in database)**
  - 129 actinides
  - 1119 fission products
  - 698 structural activation materials
  - Other physics codes typically track a minimum subset of isotopes that are important for reactivity

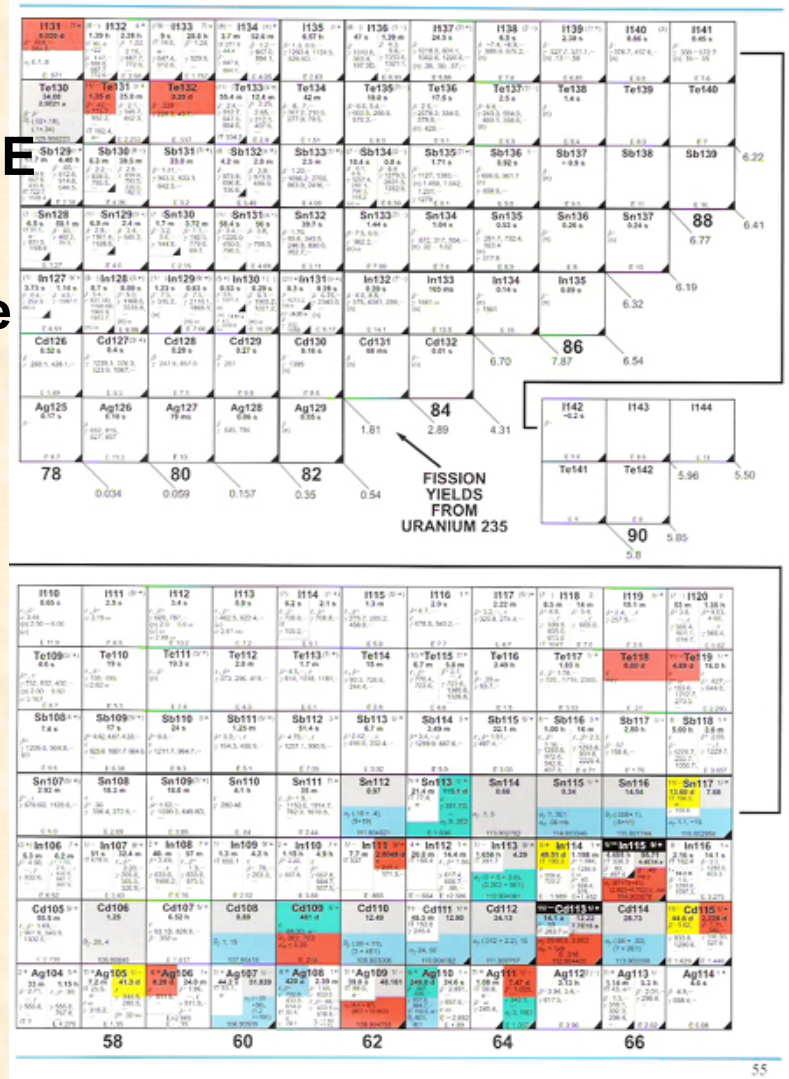

Comprehensive depletion/decay estimates with ORIGEN-S

- **Decay heat**
- **Radiation sources (neutron/gamma)**
- **One of few codes available with comprehensive isotopic characterization of fuel over time scale of <u>seconds to millennia</u>**
  - Accident analysis
  - Storage, handling, and transportation
  - Disposal or reprocessing
  - Repository analysis (dose assessment)

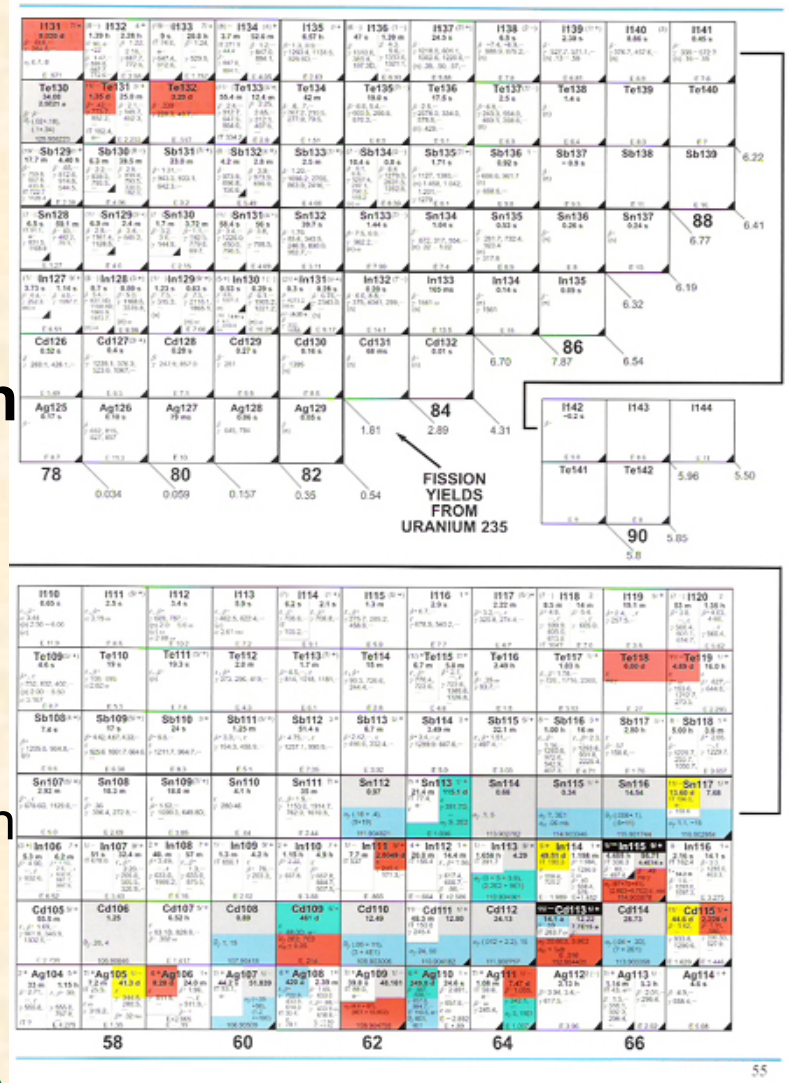

Extensive Nuclear Data Libraries

- **ORIGEN is used to solve large systems of coupled differential equations**
  - **Radioactive decay**
  - **Neutron reactions (n,g), (n,2n), (n,3n), (n,p), (n,a), (n,f)**
  - **Fission products from fission**
- **Accuracy of the code is determined by the accuracy of the nuclear data**
  - **Decay half lives and branching fractions**
  - **Cross sections**
  - **Fission product yields**
  - **Gamma ray production data**
  - **Neutron production data**
    - **Alpha decay energies**
    - **Stopping powers**
    - **Alpha,n yield cross sections**
    - **SF spectral parameters**
    - **Delayed neutron spectra**

Recent Improvements in Nuclear Data

- **1946 isotopes in data library**
  - **698 naturally-occurring isotopes and decay progeny, structural materials and activation products**
  - **1119 fission products (21 ternary yields)**
  - **129 actinides**
- **ENDF/B-VI Fission yields for 30 actinides: ^{227,228,232}Th, ^{231}Pa, $^{232-238}$U, $^{238-242}$Pu, ^{241,242m,243}Am, ^{237,238}Np, $^{242-246,248}$Cm, ^{249,252}Cf, ^{254}Es**
- **ENDF/B-VI neutron reaction cross sections, supplemented with data from activation librarirs EAF-99 and FENDL-2.0**
- **Cross sections currently available for 854 nuclides**
- **ENDF/B-VI nuclear decay data**
- **Updated photon library**

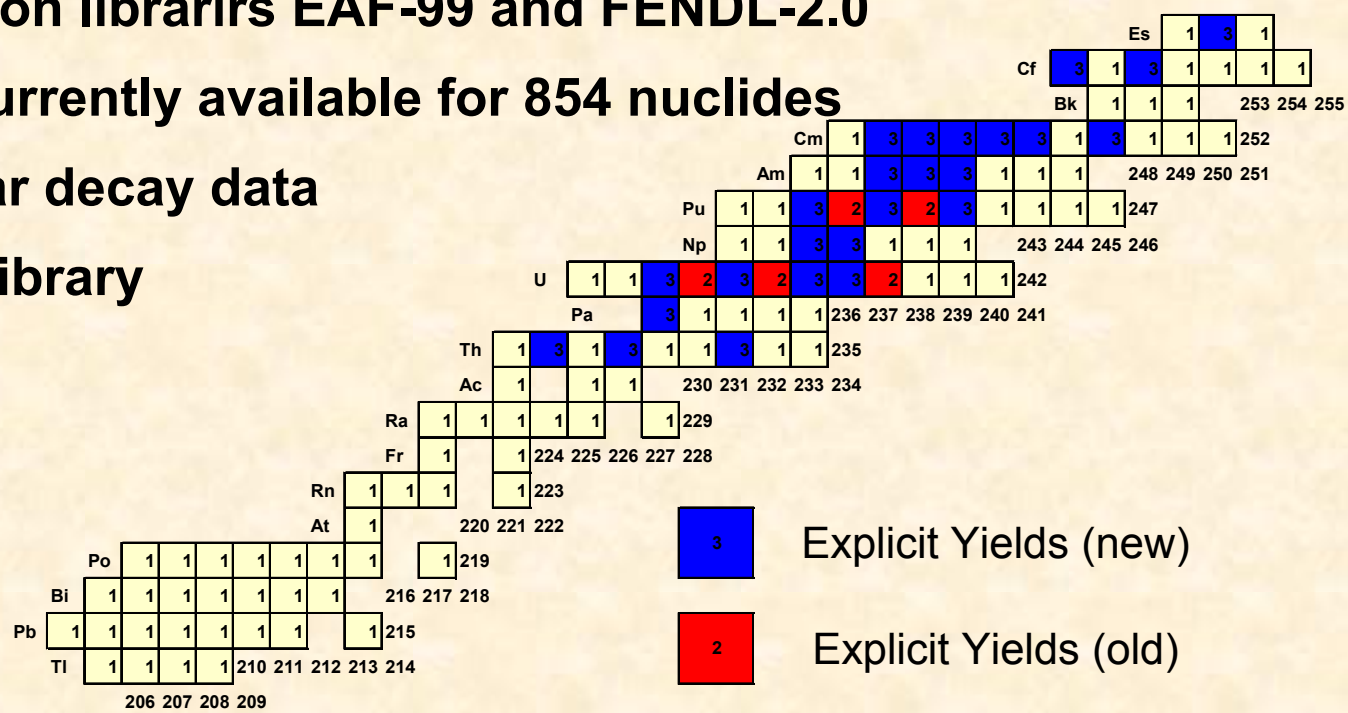

TRITON Uses Rigorous Methods For Accurate Solutions of Complex Lattices

- **CENTRM: 1-D continuous energy resonance processing**
- **ORIGEN-S: detailed isotopic compositions**
- **NEWT: 2-D flexible mesh geometry discrete ordinates transport**

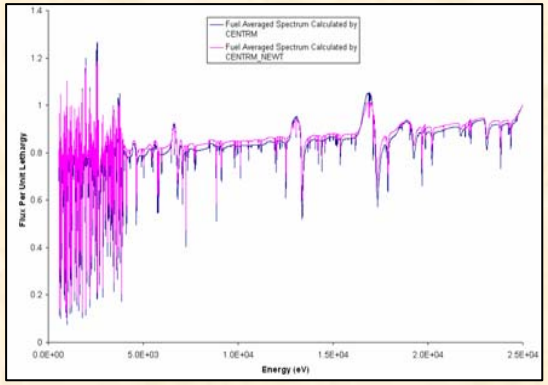

+

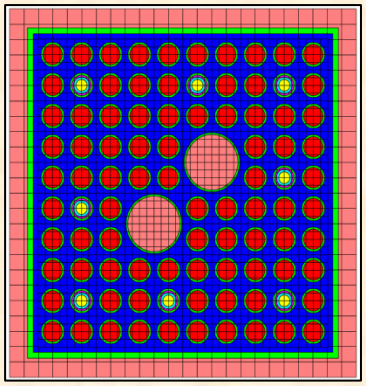

+

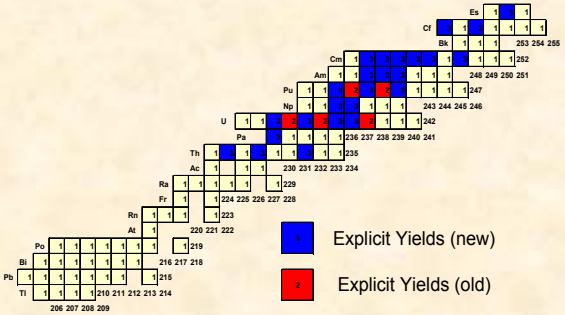

CENTRM (Energy Detail)

NEWT (Spatial/Angular Detail)

ORIGEN-S (Isotopic Detail, 1600 nuclides)

Monte Carlo Depletion - the Next Evolutionary Step

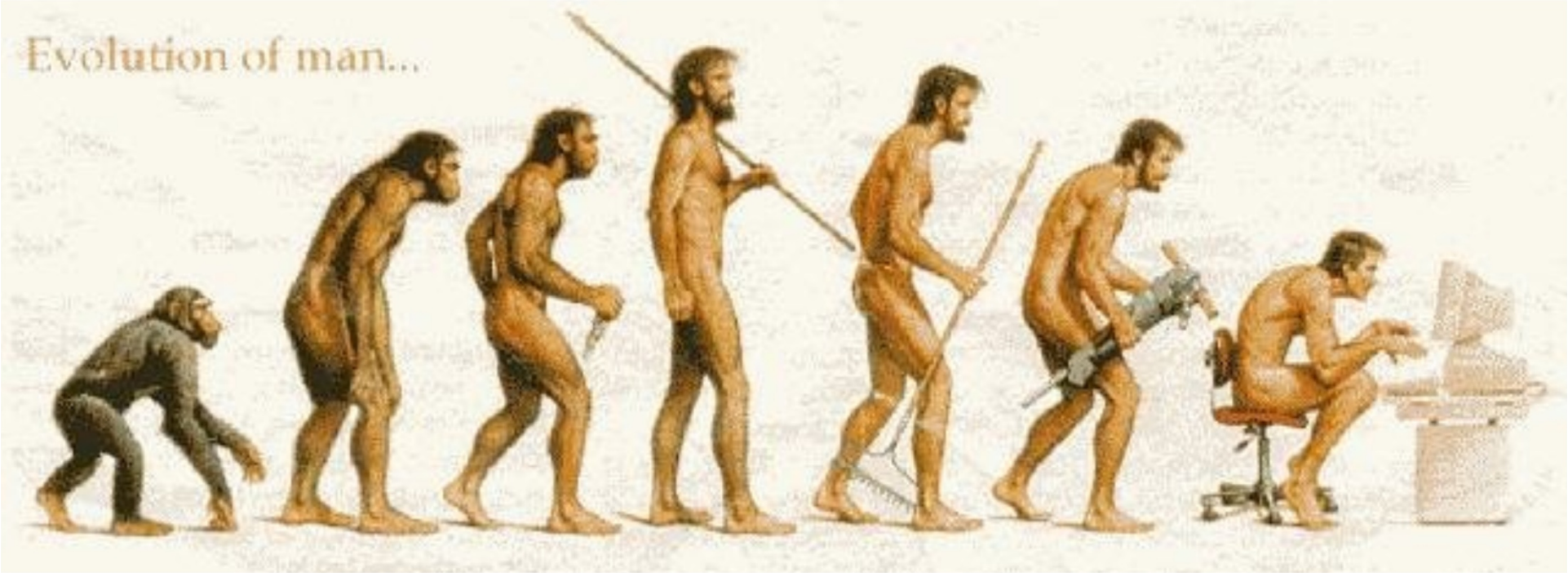

OAK RIDGE NATIONAL LABORATORY
U. S. DEPARTMENT OF ENERGY

NSTD The Nuclear Science and Technology Division

UT-BATTELLE

T5-DEPL and T6-DEPL Sequences

- **TRITON, like other SCALE control sequences, is modular in nature.**
- **Functionality of the sequence is primarily contained in the called functional modules.**
- **KENO V.a and KENO-VI are already functional modules in SCALE and thus were easily integrated into TRITON.**
- **The t5-depl sequence replaces the NEWT transport solution with KENO V.a**
- **Similarly, the t6-depl sequence replaces the NEWT transport solution with KENO-VI.**
- **KMART/KMART6 are used for KENO post-processing**

Flowchart of TRITON *t5-depl* (*t6-depl*) Sequence

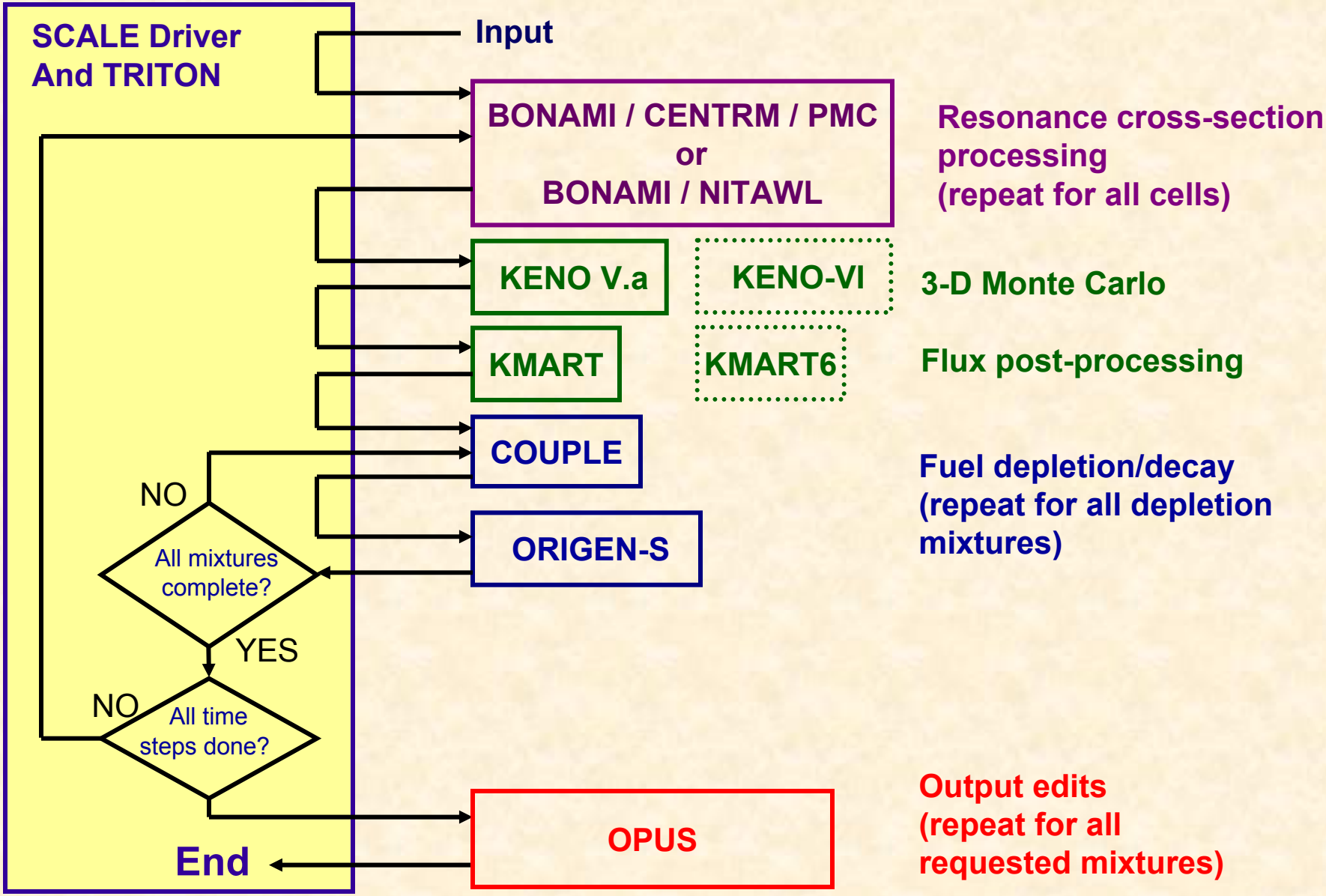

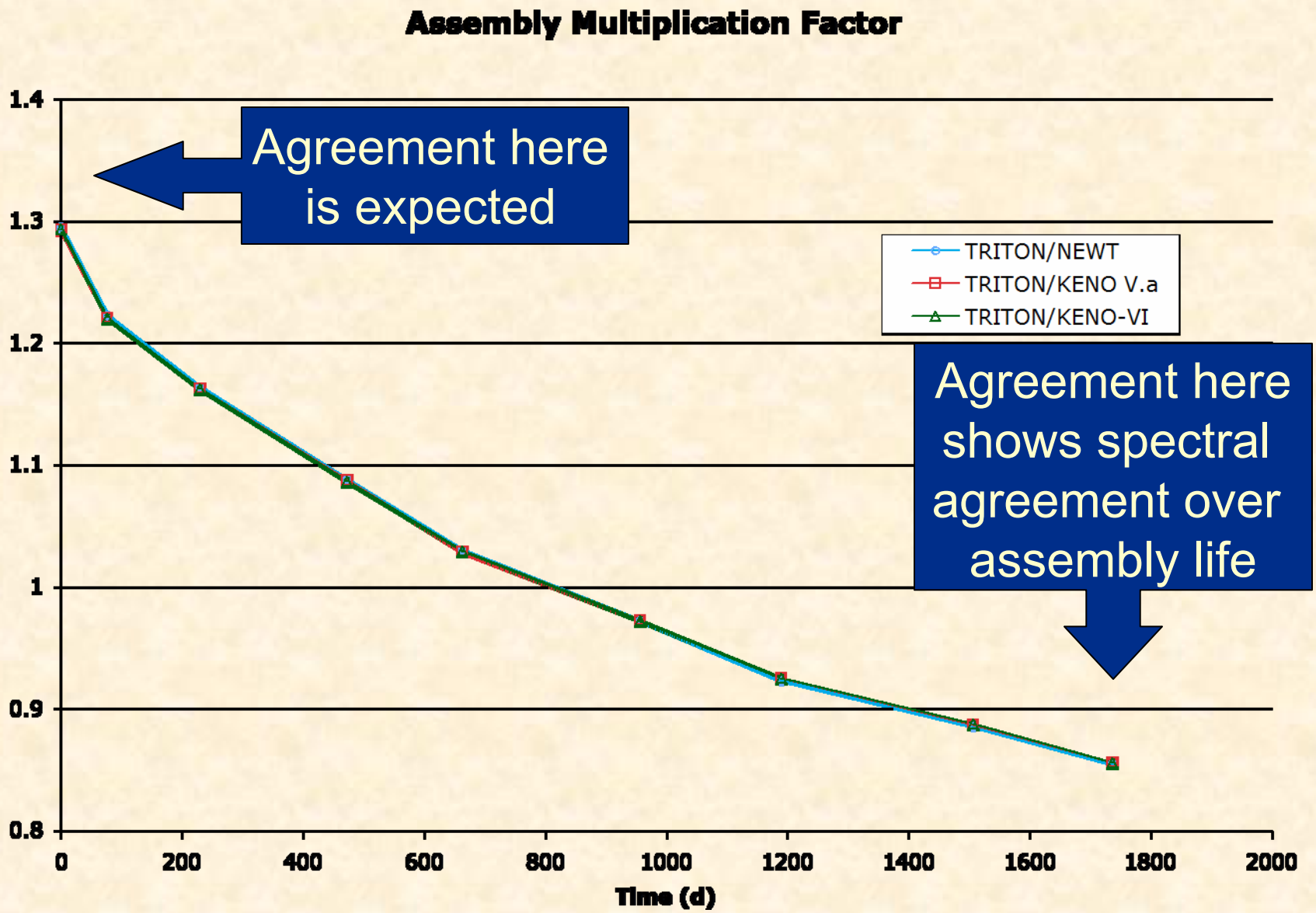
Assembly Multiplication Factor
1.4
1.3
1.2
1.1
1
0.9
0.8
0
200
400
600
800
1000
1200
1400
1600
1800
2000
Time (d)
TRITON/NEWT
TRITON/KENO V.a
TRITON/KENO-VI
Agreement here is expected
Agreement here shows spectral agreement over assembly life

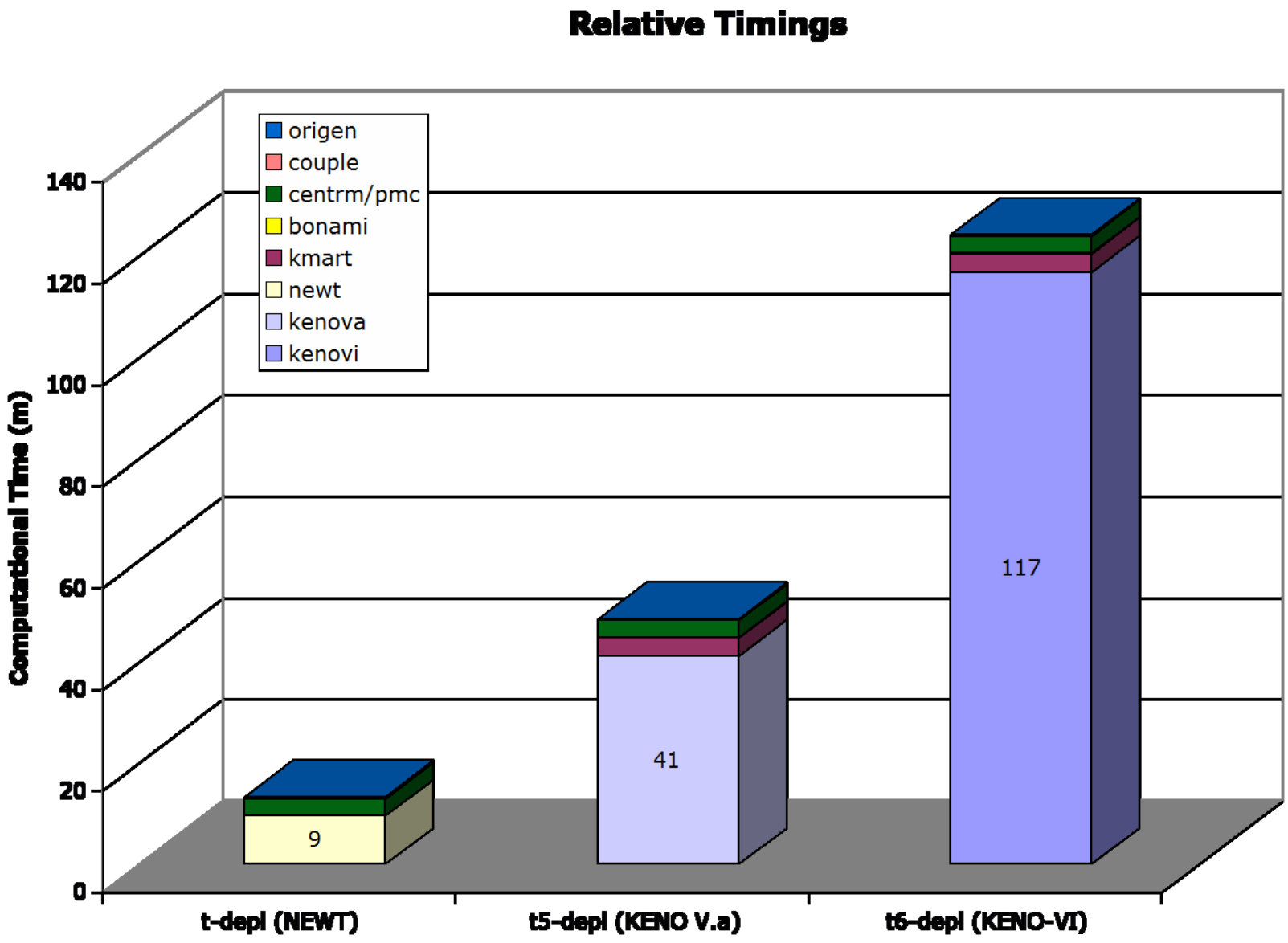
Relative Timings
origen
couple
centrm/pmc
bonami
kmart
newt
kenova
kenovi
Computational Time (m)
0
20
40
60
80
100
120
140
9
41
117
t-depl (NEWT)
t5-depl (KENO V.a)
t6-depl (KENO-VI)

Questions?

I CAN SEE FROM YOUR ZOMBIE STARE THAT YOU DON'T UNDERSTAND TECHNICAL TALK.