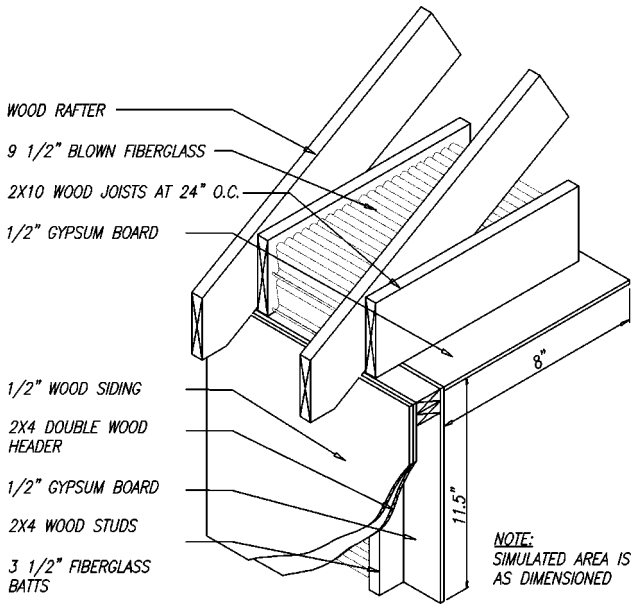

WALL ASSEMBLY 6

The roofing system shown in the adjacent drawing is supported by a 2x4 wood stud wall. The roof is framed with 2x10 wood joists at 24" on centre with wood rafters. R-19 fiberglass insulation is blown in the roof space to complete the building envelope, as seen in the last 5 wall assemblies. This roofing system is typical of residential applications.

WALL LAYERS DESCRIPTION

Layer	*Total R-Value*
	ft^2-°F-h/Btu
½-in. gypsum board 3.5-in. R-11 fiberglass batts 2x4 wood studs ½-in. plywood ½-in wood siding	9.400

EQUIVALENT WALL THERMOPHYSICAL PROPERTIES

Layer	R_n	C_n	l_n	k_n	ρ_n	c_{pn}
N	ft^2-°F-h/Btu	Btu/ft^2-°F	in	Btu-in/h-ft^2-°F	lb/ft^3	Btu/lb-°F
1	1.75663	1.57823	1	0.569	75.76	0.25
2	6.17058	0.65847	3	0.486	10.54	0.25
3	1.47319	1.21575	1	0.679	48.63	0.30
Total	9.400					

3-D WALL RESPONSE FACTORS

n	X_n	Y_n
	Btu/h ft^2 °F	Btu/h ft^2 °F
0	7.5565882E-01	1.0438068E-02
1	-3.5729725E-01	2.4943656E-02
2	-1.1789681E-01	1.9957551E-02
3	-6.1460353E-02	1.4812612E-02
4	-3.7047810E-02	1.0355807E-02
5	-2.3712689E-02	7.1831811E-03
6	-1.5653619E-02	5.0263961E-03
7	-1.0550552E-02	3.5617738E-03
8	-7.2317275E-03	2.5564333E-03
9	-5.0312449E-03	1.8571735E-03
10	-3.5484861E-03	1.3643754E-03
11	-2.5347021E-03	1.0127225E-03
12	-1.8321041E-03	7.5882849E-04
13	-1.3389093E-03	5.7348934E-04
14	-9.8849225E-04	4.3679500E-04
15	-7.3665309E-04	3.3500767E-04
16	-5.5369363E-04	2.5853802E-04
17	-4.1942084E-04	2.0061942E-04
18	-3.1994395E-04	1.5642588E-04
19	-2.4559908E-04	1.2247961E-04
20	-1.8958904E-04	9.6249042E-05
21	-1.4708198E-04	7.5873509E-05

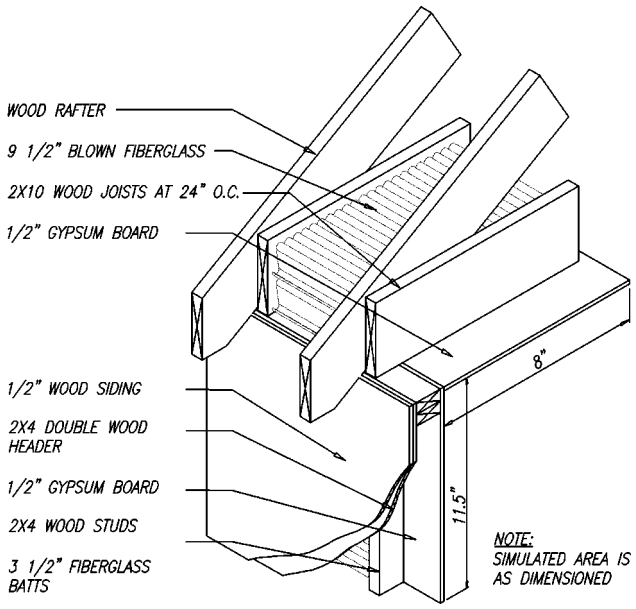

WALL ASSEMBLY 6

The roofing system shown in the adjacent drawing is supported by a 2x4 wood stud wall. The roof is framed with 2x10 wood joists at 24" on centre with wood rafters. R-19 fiberglass insulation is blown in the roof space to complete the building envelope, as seen in the last 5 wall assemblies. This roofing system is typical of residential applications.

3-D WALL RESPONSE FACTORS CONT.

n	X_n	Y_n
	Btu/h ft^2 °F	Btu/h ft^2 °F
22	-1.1460778E-04	5.9972718E-05
23	-8.9649690E-05	4.7513765E-05
24	-7.0365175E-05	3.7717382E-05
25	-5.5393273E-05	2.9991215E-05
26	-4.3720287E-05	2.3881894E-05
27	-3.4585265E-05	1.9040265E-05
28	-2.7412843E-05	1.5195945E-05
29	-2.1765082E-05	1.2138518E-05
30	-1.7306619E-05	9.7035303E-06
31	-1.3779223E-05	7.7619623E-06
32	-1.0983069E-05	6.2122639E-06
33	-8.7628394E-06	4.9742780E-06
34	-6.9973276E-06	3.9845797E-06
35	-5.5916157E-06	3.1928777E-06
36	-4.4711389E-06	2.5592231E-06
37	-3.5771598E-06	2.0518334E-06
38	-2.8632965E-06	1.6453901E-06
39	-2.2928455E-06	1.3197008E-06
40	-1.8367080E-06	1.0586461E-06