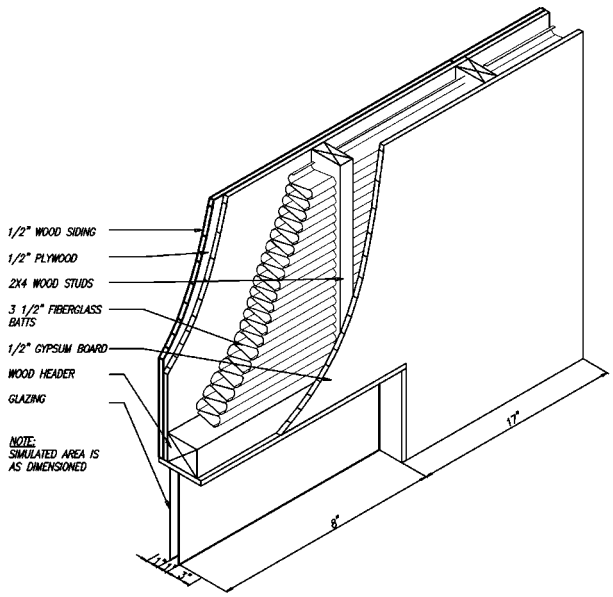

WALL ASSEMBLY 4

The adjacent drawing shows the typical window header detail that would be used in a 2x4 wood stud wall.

WALL LAYERS DESCRIPTION

Layer	*Total R-Value* ft^2-°F-h/Btu
½-in. gypsum board 3.5-in. R-11 fiberglass batts 2x4 wood studs ½-in. plywood ½-in wood siding	9.404

EQUIVALENT WALL THERMOPHYSICAL PROPERTIES

Layer *N*	R_n ft^2-°F-h/Btu	C_n Btu/ft^2-°F	l_n in	k_n Btu-in/h-ft^2-°F	ρ_n lb/ft^3	c_{pn} Btu/lb-°F
1	1.99222	0.62500	1	0.502	30	0.25
2	6.94802	0.92834	3	0.432	14.85	0.25
3	0.46361	1.85669	1	2.157	89.12	0.25
Total	9.404					

3-D WALL RESPONSE FACTORS

n	X_n Btu/h ft^2 °F	Y_n Btu/h ft^2 °F
0	5.3733909E-01	1.0783379E-02
1	-2.9775634E-01	2.8339877E-02
2	-7.3988512E-02	2.3464192E-02
3	-2.8195244E-02	1.6995917E-02
4	-1.3849479E-02	1.1033893E-02
5	-7.6849687E-03	6.8352882E-03
6	-4.4796029E-03	4.1650998E-03
7	-2.6636727E-03	2.5267945E-03
8	-1.5985620E-03	1.5330477E-03
9	-9.6447430E-04	9.3167868E-04
10	-5.8410387E-04	5.6740272E-04
11	-3.5482133E-04	3.4628723E-04
12	-2.1610131E-04	2.1175691E-04
13	-1.3191457E-04	1.2972152E-04
14	-8.0686519E-05	7.9593309E-05
15	-4.9440816E-05	4.8905345E-05
16	-3.0342822E-05	3.0086951E-05
17	-1.8647931E-05	1.8530036E-05
18	-1.1474584E-05	1.1423306E-05
19	-7.0682168E-06	7.0481108E-06
20	-4.3580449E-06	4.3518398E-06
21	-2.6892508E-06	2.6887583E-06

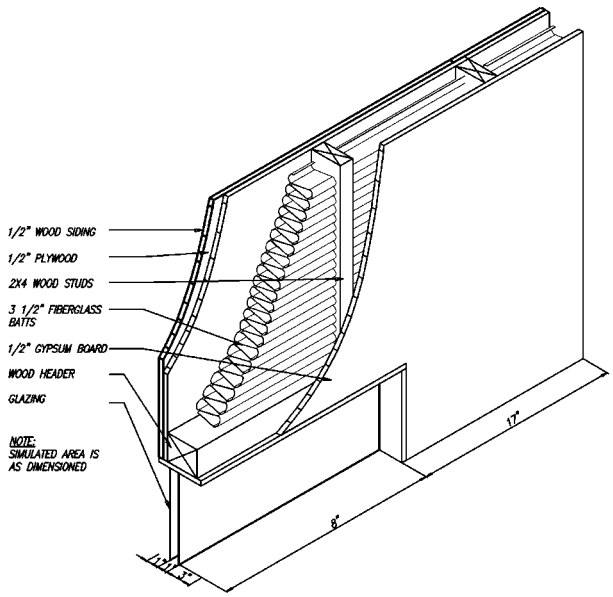

WALL ASSEMBLY 4

The adjacent drawing shows the typical window header detail that would be used in a 2x4 wood stud wall.

3-D WALL RESPONSE FACTORS CONT.

n	X_n	Y_n
	Btu/h ft^2 °F	Btu/h ft^2 °F
22	-1.6606707E-06	1.6621631E-06
23	-1.0261445E-06	1.0280334E-06
24	-6.3441203E-07	6.3609972E-07
25	-3.9241126E-07	3.9373460E-07
26	-2.4282414E-07	2.4379314E-07
27	-1.5031391E-07	1.5099434E-07