BTC/ORNL 05-UF-05-550

Engineering Science and Technology Division

Interim Draft Result Report
for Building Technology Center User Agreement UF-05-550

THE HYGROTHERMAL PERFORMANCE OF THE NET EXTERIOR INSULATION WALLS – Phase II

Authored by:
Achilles N. Karagiozis
Oak Ridge National Laboratory

Other Contributors:
Andre Desjarlais,
Phil Childs,
Jerry Atchely,
William Miller

Date Published - October 2007

Prepared for

EIFS INDUSTRY MEMBERS ASSOCIATION

Prepared by the
OAK RIDGE NATIONAL LABORATORY
Oak Ridge, Tennessee 37831
managed by
UT-BATTELLE, LLC
for the
U.S. DEPARTMENT OF ENERGY

under contract DE-AC05-00OR22725

Engineering Science and Technology Division

THE HYGROTHERMAL PERFORMANCE OF THE NET EXTERIOR INSULATION WALLS- Phase II

REPORT : Year 2 Analysis

Date Published: October 2007

Authored by

Achilles Karagiozis, Ph.D
Distinguished Research Staff
`

Other Contributors:

Prepared by
OAK RIDGE NATIONAL LABORATORY
Oak Ridge, Tennessee 37831-6070
managed by
UT-BATTELLE, LLC
for the
U.S. DEPARTMENT OF ENERGY
under contract DE-AC05-00OR22725

TABLE OF CONTENTS

List of Figures iv
Ackowledgmemts vii
Nrrd/Problem Definition 1
First Year Study 1
Hygrothermal Issues still not fully understood or quantified 6
Definition of Research Approach Phase II 7
Research Step 8
Objective of Research 9
Net Wall Selection 9
Wall Instrumentation Layout 10
Charleston SC Exterior Environmental Loads 17
Hygrothermal Material Propertiy Characterization 23
Results: Measured Data 45
Thermal and Moisture Performance of Net Wall 56
Discussion of Results 88
Conclusions 89

APPENDIX A A1
APPENDIX B B1

List of Figures Page Number

Figure 1: Research Approach for the EIMA/DOE/ORNL Project 8
Figure 2: Instrumentation Configuration for Wall 14, and Wall 15 12
Figure 3: Instrumentation Configuration for Wood Framed Walls 13
Figure 4: Instrumentation Configuration for Wood Framed Walls (Wall 12).....14
Figure 5:The proximity of the NET facility to Charleston, SC. 17
Figure: 6 The proximity of the NET facility to water.....17
Figure 7: The proximity of the NET facility to Charleston, SC. 18
Figure 8: Comparison of Temperatures with Historical norms for June 2006 and May 2007 .20
Figure 9: Comparison of Temperatures with Historical norms for June 2006 and May 2007 .20
Figure 10: IECC ZONES 21
Figure 11: Phase II monthly averaged Relative Humidity (%) as a function of time.....22
Figure 12: Phase II monthly averaged Temperature as a function of time 22
Figure 13: Climate Controlled (Temperature & Relative Humidity) Chamber.....24
Figure 14: Desiccant Temperature Control Drying Oven.....25
Figure 15: Water Vapor Permeance Test Specimens 25
Figure 16: Pressure Plate Apparatus 26
Figure 17: Liquid Uptake Apparatus 26
Figure 18: Samples for Liquid Uptake Measurements 27
Figure 19: Samples for Capillary Suction Isotherms.....27
Figure 20: Samples for Hygroscopic Sorption Isotherms.....28
Figure 21: Wet cup test is similar to the dry cup setup.....28
Figure 22: Experimental set-up utilized in conducting sorption isotherm measurements (Pazera et al [2006] [2004]) 30
Figure 23: Sorption-Suction Isotherms.....31
Figure 24: Cross-section for a typical pressure plate with a porous material placed on the porous membrane.....32
Figure 25: Weight Change plotted as functions of square root of time (min) for a 0.5 inch gypsum board.....34
Figure 26: Sorption Isotherms as a function of the Average Relative Humidity (%).....38
Figure 27: Sorption Isotherms as a function of the Average Relative Humidity (%).....39
Figure 28: Sorption Isotherms as a function of the Average Relative Humidity (%).....39
Figure 29: Sorption Isotherms as a function of the Average Relative Humidity (%).....40
Figure 30: Sorption Isotherms as a function of the Average Relative Humidity (%).....40
Figure 31: Sorption Isotherms as a function of the Average Relative Humidity (%).....41
Figure 32: Sorption Isotherms as a function of the Average Relative Humidity (%).....41
Figure 33: Sorption Isotherms as a function of the Average Relative Humidity (%).....42
Figure 34: OSB Liquid Diffusivity as a function of moisture content 43
Figure 35: Plywood Liquid Diffusivity as a function of moisture content.....44
Figure 36: Hourly Heat Fluxes for June 25, 2006 for Panel 3, 5, 10 and 15 46
Figure 37: Hourly Heat Fluxes for August 15, 2006 for Panel 3, 5, 10 and 15.....47
Figure 38: Hourly Heat Fluxes for November 15, 2006 for Panel 3, 5, 10 and 15.....47
Figure 39: Hourly Heat Fluxes for Feb 15, 2007 for Panel 3, 5, 10 and 15 48
Figure 40: Hourly Heat Fluxes for May 15, 2007 for Panel 3, 5, 10 and 15 48
Figure 41: Hourly Heat Fluxes for June 25, 2006 for Panel 3, 14, 17 and 26 49

Figure 42: Hourly Heat Fluxes for August 15, 2006 for Panel 3, 14, 17 and 26.....49
Figure 43: Hourly Heat Fluxes for November 15, 2006 for Panel 3, 14, 17 and 26.....50
Figure 44: Hourly Heat Fluxes for November 15, 2006 for Panel 3, 14, 17 and 26.....50
Figure 45: Hourly Heat Fluxes for November 15, 2006 for Panel 3, 14, 17 and 26.....51
Figure 46: Hourly Averaged Negative Heat Fluxes for each Wall May 2006 – June 2007.....52
Figure 47: Hourly Averaged Positive Heat Fluxes for each Wall May 2006 – June 2007.....53
Figure 48: Monthly Averaged Positive Heat Fluxes for each Wall May 2006 – June 2007 54
Figure 49: Monthly Averaged Positive Heat Fluxes for each Wall May 2006 – June 2007 55
Figure 50: Temperatures in Wall 59
Figure 51: Relative Humidity in Wall 59
Figure 52: Moisture Content in Wall 60
Figure 53: Temperatures in Wall 62
Figure 54: Relative Humidity in Wall 62
Figure 55: Moisture Content in Wall 63
Figure 56: Temperatures in Wall 65
Figure 57: Relative Humidity in Wall 65
Figure 58: Moisture Content in Wall 66
Figure 59: Temperatures in Wall 68
Figure 60: Relative Humidity in Wall 68
Figure 61: Moisture Content in Wall 69
Figure 62: Temperatures in Wall 71
Figure 63: Relative Humidity in Wall 71
Figure 64: Moisture Content in Wall 72
Figure 65: Temperatures in Wall 74
Figure 66: Relative Humidity in Wall 74
Figure 67: Moisture Content in Wall 75
Figure 68: Temperatures in Wall 77
Figure 69: Relative Humidity in Wall 77
Figure 70: Moisture Content in Wall 78
Figure 71: Temperatures in Wall 80
Figure 72: Relative Humidity in Wall 80
Figure 73: Moisture Content in Wall 81
Figure 74: Temperatures in Wall 83
Figure 75: Relative Humidity in Wall 83
Figure 76: Moisture Content in Wall 84
Figure 77: Temperatures in Wall 86
Figure 78: Relative Humidity in Wall 86
Figure 79: Moisture Content in Wall 87
Figure 80: Temperatures in Wall 89
Figure 81: Relative Humidity in Wall 89
Figure 82: Moisture Content in Wall 90
Figure 83: Temperatures in Wall 92
Figure 84: Relative Humidity in Wall 92
Figure 85: Moisture Content in Wall 93
Figure 86: Temperatures in Wall 95
Figure 87: Relative Humidity in Wall 95

Figure 88: Moisture Content in Wall 96
Figure 89: Temperatures in Wall 98
Figure 90: Relative Humidity in Wall 98
Figure 91: Moisture Content in Wall 99
Figure 92: Temperatures in Wall 101
Figure 93: Relative Humidity in Wall 101
Figure 94: Moisture Content in Wall 102

ACKNOWLEDGEMENTS

Phase II of the EIMA/DOE/ORNL study investigates the hygrothermal performance of a number of Exterior Insulation and Finish System (EIFS) walls, was funded jointly by EIMA, Mr. Stephan E. Klamke, Executive Director, and by the Department of Energy, Project Manager, Mr. Marc LaFrance. The author of this report gratefully acknowledges important contributions by Mr. Phil Childs (Material Property and D/A coordinator ORNL), Mr. Jerry Atchely (sensor installation ORNL), Mr. Mika Salonvaara, Mr. Florian Antretter, Germany (Fraunhofer Collaborator), as well as the support of Mr. Andre Desjarlais, ORNL group leader. The continued financial support of the U.S. Department of Energy to the moisture control research at the Oak Ridge National Laboratory has made this project possible. Finally, the authors acknowledge the contributions of EIMA members, representatives, including John Edgar, Bill Preston, Tom Venticinque, Peter Harrison, Terry Viness, and Tina Bramlett. The graphical assistance by Mr. Edgar from STO Corp is acknowledged throughout this report. Last but not least, the coordination, construction management and constant enthusiasm of both Barry and Jackie Hardman is greatly appreciated.

NEED/PROBLEM DEFINITION

This report describes the results gathered during Phase II of the scientific research project entitled: THE HYGROTHERMAL PERFORMANCE OF THE NET EXTERIOR INSULATION WALLS. In Phase II, the research effort continues to be focused on exterior foam insulated wall systems and has expanded the research investigation on a number of distinct hygric loading impacts. These hygrothermal loading impacts can be present due to orientation of the wall, defects due to workmanship (allowing water penetration), a range of vapor retarder strategies (optimal and improper), different types of exterior air cavity ventilation strategies and finally the comparison of the EIFS hygrothermal performance with a number of other commonly used wall cladding systems.

The need for this Phase II research was established from the research performed in Phase I which indicated excellent hygric performance of the EIFS walls for the Charleston SC climate when "good" installation practice is employed. In Phase I all of the monitored wall systems were facing the south-east orientation. This orientation coincides with the highest wind-driven rain orientation for Charelston SC. In Phase I wall systems, no intentional water penetration through the exterior lamina was introduced into the wall systems representing perfectly constructed wall systems.

In this report, Phase II includes performance of EIFS walls as well as a number of other walls systems with the addition of water penetration, effect of the north-west orientation, vapor retarder strategy, type of exterior water-resistive barrier and the influence of the ventilation air cavity. The level of forgiveness is investigated for the EIFS walls when workmanship is compromised. In addition, Phase II research attempts to provide some risk assessment of the hygrothermal performance of EIFS walls in comparison to other cladding for the climate conditions of Charleston, SC.

To allow continuity of this report with the work performed in Phase I, a brief overview of the research work performed is provided. A full report for Phase I was provided to EIMA in June 2006 and all the details and results are presented in the report by Karagiozis [2006].

First Year Study

Phase I, a 15 month field research project (January 2005 to April 2006) conducted by the Oak Ridge National Laboratory (ORNL) characterized the moisture and thermal performance of various configurations of exterior cladding systems (EIFS, brick, stucco, concrete block and cementitious fiber board siding). Phase I was completed on March 30 2006, after compiling data for 15 months. The hygrothermal research investigation included the impact of innovative EIFS features, specifically the application of innovative liquid applied moisture control membranes, smart vapor retarder systems (bi-directional membranes), and impact of exterior cladding venting, and the overall thermal and moisture performance of EIFS.

The research investigated the side by side hygric performances of each wall cladding system. The field data and the hygrothermal model derived from it are particularly useful not only in developing guidelines for the use of EIFS but also in demonstrating the moisture and temperature control performance of EIFS as compared with other types of exterior claddings.

The primary goals of the Phase I study were:

- To validate the moisture and thermal performance of EIFS wall systems
- To quantify the performance of EIFS over other types of exterior claddings
- To develop high quality data to calibrate a hygrothermal (moisture and temperature) computer model with the unique features of EIFS that will permit extension for all climatic regions

The location of the wall field monitoring was in Charleston, SC, and the hygrothermal material property analysis was conducted at the Oak Ridge National Laboratory, Oak Ridge, Tennessee

Study Approach: In keeping with the DOE's directive of promoting a whole-building approach to building design, operation and maintenance, the research project considered the building envelope in its entirety, rather than studying isolated materials or component systems. The research approach is summarized below:

- Characterize the moisture, and thermal performance properties of critical construction materials and sub-systems used in exterior wall systems
- Conduct field testing on a variety of exterior wall systems to determine their thermal and moisture response to the real world during the course of 15 months.
- Develop performance information useful to the design methodology that will permit architects and engineers to optimize energy efficiency.

To achieve these goals, a special building (see photo below) was designed and constructed near Charleston, South Carolina. A flexible design was implemented to allow the change of wall panels with ease, to compartmentalize the building into two zones, and to allow control of the interior conditions. In Phase I, a total number of 15 exterior cladding configurations were integrated into one side of the building (south-eastern exposure). In this way, all of the exterior claddings would be exposed to similar weather conditions during the course of the study. Building orientation and placement of the exterior wall test panels were determined after careful consideration of historical weather patterns, including the prevailing direction of precipitation

While other types of exterior claddings were studied, the primary focus of this project were various EIFS configurations, including EIFS with drainage systems. Table 1 below lists the configurations for the 15 wall panels.

Table 1. Phase I Configuration of the Exterior Wall Assemblies Investigated at the NET Facility

Panel / System	EPS	Attachment	Drainage / Air Space	Weather Barrier	Sheathing	Framing	Insulation	Vapor Barrier
Panel 1 EIFS	1 ½" Flat	Ribbon & Dab	NA	NA		CMU		Note 1
Panel 2 EIFS	1 ½" Flat	Notched Trowel	Vertical Ribbons	Liquid	Plywood	2 x 4@16"	R-11 Unfaced	None
Panel 3 EIFS	1 ½" Flat	Notched Trowel	Vertical Ribbons	Liquid	Plywood	2 x 4@16"	R-11 Unfaced	Membrane
Panel 4 EIFS	1 ½" Flat	Notched Trowel	Vertical Ribbons	Liquid	Plywood	2 x 4@16"	R-11 Unfaced	Yes
Panel 5 EIFS	4" Flat	Notched Trowel	Vertical Ribbons	Liquid	Plywood	2 x 4@16"	0	None
Panel 6 EIFS	1 ½" Flat	Notched Trowel	Vertical Ribbons	Liquid	Plywood	18 ga @16"	R-11 Unfaced	None
Panel 7 EIFS	1 ½"	Mech. Fastened	Grooved EPS	House wrap	Plywood	2 x 4@16"	R-11 Unfaced	None
Panel 8 EIFS	1 ½"	Mech. Fastened	Grooved EPS	House wrap	Plywood	2 x 4@16"	R-11 Unfaced	Yes - 6 mil poly
Panel 9 EIFS	1 ½" Flat	Mech. Fastened	Mat	House wrap	OSB	2 x 4@16"	R-11 Unfaced	None
Panel 10 EIFS Ventilated	1 ½" Flat	Adhesive	Lath	Liquid	Plywood	2 x 4@16"	R-11 Unfaced	None
Panel 11 EIFS Commercial	1 ½" Flat	Notched Trowel	Vertical Ribbons	Liquid	ASTM C1177 Gyp. Board	18 ga @16"	R-11 Unfaced	None
Panel 12 3 Coat Portland Cement Plaster	No	Mech. Fastened Note 2	3.4 Metal Lath	2-Layers Grade D 60 Minute	OSB	2 x 4@16"	R-11 Unfaced	None
Panel 13 1 Coat	1" Flat	Paint – later date Note 2	Woven Wire Plaster Base 1x20ga.	1-Layers Grade D 60 Minute (behind foam)	OSB	2 x 4@16"	R-11 Unfaced	None
Panel 14 Brick		NA	Air Cavity 1"	1-Layers Grade D 60 Minute	OSB	2 x 4@16"	R-11 Unfaced	None
Panel 15 Cement Board Siding (Cladding)	EPS	Mech. Fastened	NA	1-Layers Grade D 60 Minute	OSB	2 x 4@16"	R-11 Unfaced	None

Typical Interior Finishing – ½" drywall, primed and painted (1 coat acrylic paint)
Note 1 – Finished with furred ½" drywall, primed and painted (1 coat acrylic paint)
Note 2 – Painted white initially, OSB = ½". Lath = G 60

Each of the wall panels contained a variety of sensors that recorded the temporal temperatures, relative humidities, moisture contents and some walls included heat flux sensors. These sensors collected data on an hourly basis and transmitted the data to the ORNL Building Thermal Envelope Systems & Materials Energy Division Research facility in Oak Ridge, Tennessee for analysis. A total of 15 months of data were collected from January 1, 2005 through March 30, 2006.

Summary of Results and Conclusions from Phase I.

The research data lead to the following findings and support the following statements:

- The best performing wall system was the EIFS wall consisting of four (4) inches of expanded polystyrene insulation board without any interior stud insulation (no fiberglass). This wall outperformed all other walls in terms of moisture while maintaining superior thermal performance.

- The brick clad wall systems tended to accumulate more moisture and retain moisture longer than the EIFS cladding.

- The cementitious fiber board siding wall system tended to accumulate more moisture and retain moisture longer than the EIFS cladding. This wall however, performed hygrothermally better than the brick cladding.

- The wall panels with polyethylene vapor retarders were found to have higher wood moisture content and excessive sheathing relative humidity (80 percent and higher). The results from this study clearly indicate that the use of a polyethylene vapor retarder is not a good strategy. Instead, interior vapor retarders that are highly vapor permeable are recommended in hot and humid climates.

- EIFS walls may employ house wraps as exterior water-resistive barriers; however, moisture movement and accumulation is higher in these wall systems when compared with water-resistive barrier coatings used as water-resistive barriers. The small but measureable difference in the amount of moisture accumulated in the sheathing was recorded between the use of spun-bonded polyolefin membrane (being higher) than the coating barriers.

- EIFS using grooved expanded polystyrene insulation board improves the performance of the wall, since venting is enhanced.

- Insulation placed on the exterior side of the structural sheathing was found to be beneficial.

- EIFS drainage assemblies, using vertical ribbons of adhesives, provide a drainage path and air space that contributes positively towards the hygrothermal performance of the walls.

- EIFS installed over glass mat faced, modified gypsum core sheathing that is attached to steel studs performs slightly better for interior vapor control strategies that are open

(higher water vapor permeance) as compared with EIFS attached over wood sheathing and wood studs.

The wall system demonstrating the lowest hygrothermal performance was the brick, followed by the stucco clad systems (both 3-coat and 1-coat), and then the cementitious fiberboard cladding.

Hygrothermal issues still not fully understood or quantified

To date, the hygrothermal performance of many wall systems including EIFS data has not been available for all climatic effects (such as the effects of rainwater penetration, solar radiation, night sky radiation and the influence of wind speed and site/wall orientation on both the convective and mass transfer coefficients). Indeed the response of the various wall systems to exterior and interior hygric loading has not been documented or catalogue for wall systems. This has resulted in misinterpretation of the hygrothermal processes that occur in wall cladding systems. Indeed, many of the negative claims found even within scientific journals on the hygrothermal performance of EIFS may not be applicable with today's EIFS with drainage wall systems. Many changes have occurred not only in-terms of installation practice but also with some of the basic materials used in todays walls. Examples are the chemical constitution of gypsum board, the changes in the material and hygric performance of a number of water-resistive membranes, the durability of oriented strand board (OSB) and many more. However, erroneous claims have been made that adding additional exterior insulation (EPS) reduces the drying performance of wall system. For the Charleston SC region the above claim is outright false as clearly demonstrated in the Phase I research study, however many others have appeared.

Newer exterior cavity ventilated EIFS, have shown in Phase I to enhance the performance of conventional EIFS walls, however still unresearched is the issue whether possible degradation of the thermal performance occurs. The allegations laid out in the scientific and code committees is that by introducing a ventilated air cavity, the exterior foam thermal insulation is short-circuited, and the function of the exterior foam is negated. In Phase II, the addition of heat flux sensors for both the south-east and north-west orientations were implemented to measure and gap the thermal consequences of cavity ventilation.

The impact of the orientation of the wall has also been raised as critical for the hygrothermal performance of EIFS walls. This issue was found very critical for the performance of stucco walls, and is directly related to both the hygric loading due to the specific orientation and the accompanying drying potential with each stucco wall design. The issue of hygrothermal wall performance due to effects of orientation, for example a wall facing north versus one that faces south, could be critical when coupled with the effects of an absorptive cladding and solar driven moisture. Additional research was performed to quantify this effect during Phase II

The impact of incidental water passing through the first line of defense, the exterior EIFS lamina is not known. Currently literature data indicates that even if very small amounts of

water are allowed to pass through the exterior foam catastrophic failure may occur in the EIFS wall. As, the ASHRAE SPC 160P proposed standard recommends the use of 1 % water of water penetration on the exterior surface of the water-resistive barrier, this could preclude the use of EIFS walls based on these not scientifically evaluated claims against the EIFS walls. To address this issue a systematic moisture engineering research effort was implemented in Phase II to provide scientific data to address the performance and risk associated with water penetration.

Finally, but not least, a limited hygrothermal material property database exists for EIFS materials. This is very limiting as designers can not conduct an analysis of the performance of EIFS in different climates. In Phase II, an extensive testing analysis was performed to gather data on the moisture performance of various material used both in Phase I and II of the research study.

Description of Research Approach Phase II

In Phase II the same research approach and protocol as described in Phase I final report was deployed for the research investigation of the hygrothermal performance of the EIFS walls.

The research Phase II approach is again summarized below as:

1) continue the development of accurate hygrothermal material property characterizations of the critical construction materials;

2) hygrothermal characterization of field testing to expose a series of innovative wall systems (trowel applied water-resistive barriers) to real environmental conditions.

3) hygrothermal characterization of field testing to expose a series of innovative wall systems with additional water penetration loading (direct water into the wall).

4) Development of performance information to be available for the formulation of design guidelines to provide options for energy efficiency while controlling heat, air and moisture transport (Phase I, & II).

The analysis performed in Phase II includes newly constructed wall structures and 20 month old aged wall systems (original Phase I panels). The field analysis performed in Charleston (Hollywood), SC provides the building science performance answers to a number of hot and humid climate issues. In Phase III, we expect to extend this knowledge to a number of other regions of the USA, using advanced hygrothermal modeling. Efforts will be initiated to calibrate the ORNL moisture model using Phase I and II field data which will allow the incorporation of the unique features of the exterior insulated walls panels into the hygrothermal model.

Emphasis by DOE & ORNL throughout the Phase II project has been on the development of quality temporal data for the calibration of the ORNL hygrothermal models.

RESEARCH STEPS

A number of steps are involved in the research. Figure 1 demonstrates the scientific approach that is required to accomplish the deliverables of this project. In Phase II, data has been gathered between May 2006 and June 2007 for an additional 15 walls at the Charleston, SC test facility.

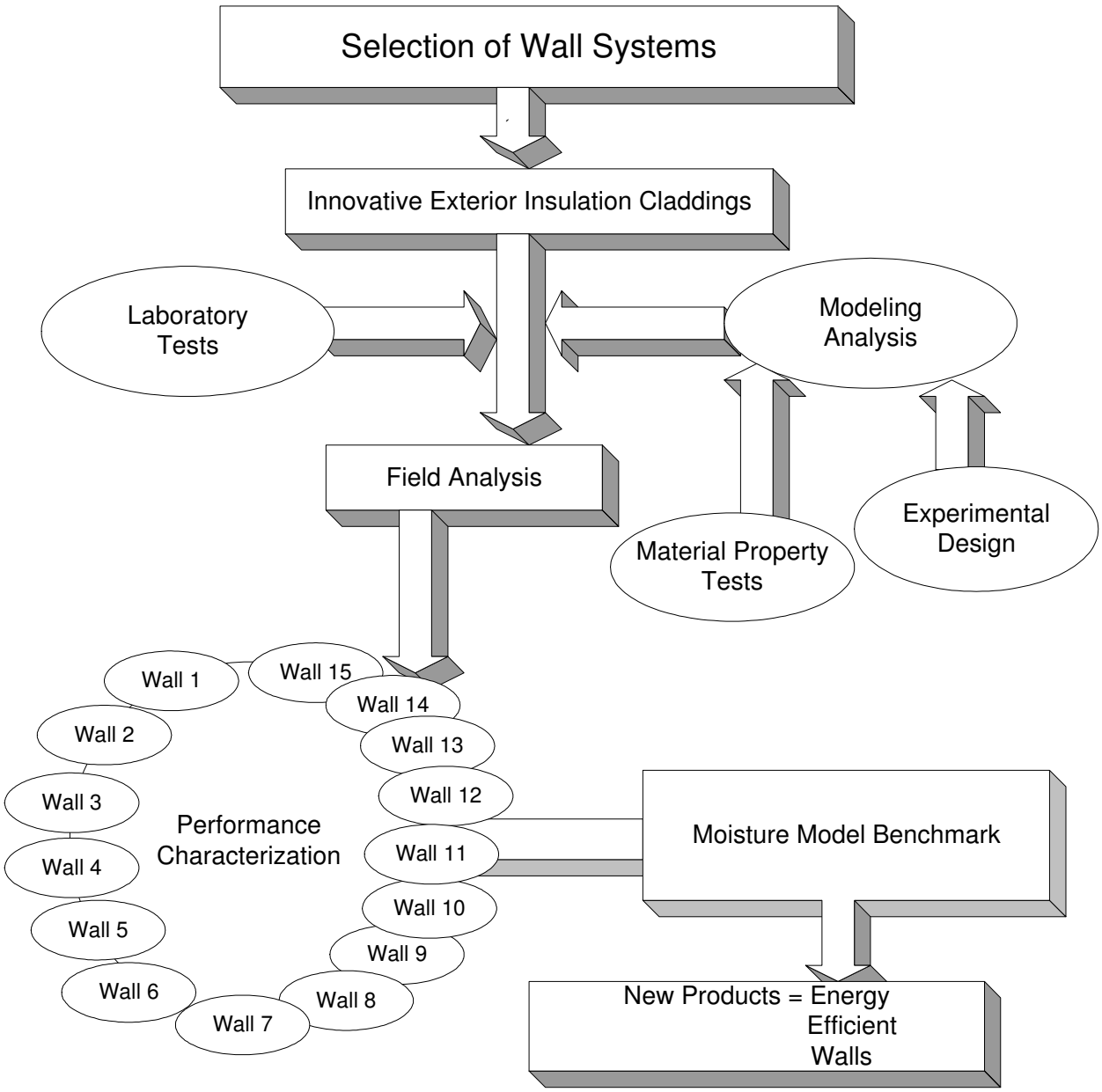

Figure 1: Research Approach for the EIMA/DOE/ORNL Project

Objective of Research

The research performed for the EIMA/DOE/ORNL project intends to provide a quantitative analysis through a series of field, laboratory and modeling activities of the hygrothermal performance of a number of exterior cladding systems with emphasis on exterior applied insulation. Emphasis is given on the energy efficient wall structures that incorporate exterior foam insulation. The focus of the Phase II study was to investigate the response of a selected number of walls (15 Walls) that are subjected to interior and exterior hygric loadings. The structures are expected to contain perfect and walls with non-perfect installation. Indeed Phase II study further stressed the 15 wall systems with additional weathering loads and added water into some of the wall systems as per the SPC 160P standard. In the tests conducted with water penetration, the amount of water injected into the walls was much larger than those suggested by the proposed ASHRAE standard SPC 160. The main objective was to gather valid hygric performance data to assess the risk and understand the level of forgiveness imbedded into these systems as a function of wall design.

As in Phase I the wall hygrothermal performance data gathered in Phase II is limited to the climates as found in Charleston, SC and extrapolation to other climate zones is not valid.

The hygrothermal performance of the EIFS walls were also compared to another cladding systems used in the Charleston region. Stucco and brick veneer walls systems were included in the study. A number of other performance issues were investigated such as the impact of the type of water-resistive barrier, the impact of interior vapor retarder strategy, the effect of wall orientation, and the impact of air cavity ventilation.

NET WALL SELECTION

A committee set-up by EIMA members, and ORNL staff configured the second set of wall systems for testing at the NET facility that was aligned to the objectives of the project. Listed in Table 2 is the complete list of wall assemblies.

As described previously the objective of the Phase II research was to study the sensitivity of the EIFS walls to water penetration, the impact of hygric loading due the wall orientation, the impact of interior vapor retarder strategy, the impact of ventilated EIFS walls for both south and north orientations, the impact of water-resistive barrier selection (housewrap versus liquid applied), and the impact of wall exterior cladding system (EIFS, Brick, and Stucco).

With this broad scope in mind, but a limited number of available walls slots (total number of 15 walls), a judicious analysis was performed to optimally select the wall system configuration. Table 2 shows a list of the wall selected for Phase II of the research project and a photo of the southeast exposure is shown with the completed wall assemblies.

WALL INSTRUMENTATION LAYOUT

In each of the Phase II walls, the wall system included 17 thermistors, 6 relative humidity sensors and 8 moisture content sensors. In Figures 2 through 4 the sensors are displayed as instrumented in the wall assemblies. The same sensor arrangement is found in all three types of wall assemblies. with the only difference being between the absorptive cladding system (Brick and Stucco walls) versus the non-absorptive (EIFS walls) where the relative humidity sensors are imbedded into the exterior cladding as shown in wall in a similar fashion to the brick wall system.

Table 2: Phase II Wall Assemblies investigated in the NET Facility

System	EPS	Attachment	Drainage/ Air Space	Weather Barrier	Sheathing	Framing	Insulation	Vapor Barrier
EIFS #1 (Panel 2) (SE)	1 ½" Flat	Notched Trowel	Vertical Ribbons	Liquid	Plywood	2 x 4@16"	R-11 Unfaced	None
EIFS #2 (Panel 3) (SE) With Flaw	1 ½" Flat	Notched Trowel	Vertical Ribbons	Liquid	Plywood	2 x 4@16"	R-11 Unfaced	None
EIFS #3 (Panel 4) (SE)	1 ½" Flat	Notched Trowel	Vertical Ribbons	Liquid	Plywood	2 x 4@16"	R-11 Unfaced	6-mil Poly
EIFS #4 (Panel 5) (SE)	4" Flat	Notched Trowel	Vertical Ribbons	Liquid	Plywood	2 x 4@16"	0	None
EIFS #5 (Panel 6) (SE)	1 ½" Flat	Notched Trowel	Vertical Ribbons	Liquid	Plywood	18 ga @16"	R-11 Unfaced	None
EIFS #6 (Panel 7) (SE) With Flaw	1 ½"	Notched Trowel	Vertical Ribbons	Liquid	Plywood	2 x 4@16"	R-11 Unfaced	6-mil Poly
EIFS #7 (Panel 9) (SE)	1 ½" Flat	Mech. Fastened	Mat	House Wrap	OSB	2 x 4@16"	R-11 Unfaced	None
EIFS #8 (Panel10) SE) Ventilated	1 ½" Flat	Adhesive	Lath	Liquid	Plywood	2 x 4@16"	R-11 Unfaced	None
3Coat#9 Portland Cement Plaster (Panel12) (SE)	No	Mech. Fastened Note #2	3.4 Metal Lath	2-Layers Grade D 60 Minute	OSB	2 x 4@16"	R-11 Unfaced	None
Brick #10 (Panel 14) (SE)		NA	Air Cavity 1"	1-Layers Grade D 60 Minute	OSB	2 x 4@16"	R-11 Unfaced	None
Brick #11 (Panel 15) (SE) With Flaw		NA	Air Cavity 1"	1-Layers Grade D 60 Minute	OSB	2 x 4@16"	R-11 Unfaced	None
EIFS #12 (Panel 16)(NW)	1 ½" Flat	Notched Trowel	Vertical Ribbons	Liquid	Plywood	2 x 4@16"	R-11 Unfaced	6-mil Poly
EIFS #13 (Panel 17)(NW)	1 ½" Flat	Notched Trowel	Vertical Ribbons	Liquid	Plywood	2 x 4@16"	R-11 Unfaced	None
EIFS #14 (Panel 18)(NW) With Flaw	1 ½" Flat	Notched Trowel	Vertical Ribbons	Liquid	Plywood	2 x 4@16"	R-11 Unfaced	None
EIFS #15 (Panel26) (NW) Ventilated	1 ½" Flat	Adhesive	Lath	Liquid	Plywood	2 x 4@16"	R-11 Unfaced	None

Typical Interior Finishing – ½" drywall, primed and painted (1 coats acrylic paint)
Note #1 – finished with furred ½" drywall, primed and painted (1 coats acrylic paint)
Note #2 – Painted white initially. Plywood = ½". OSB = ½". Lath = G 60

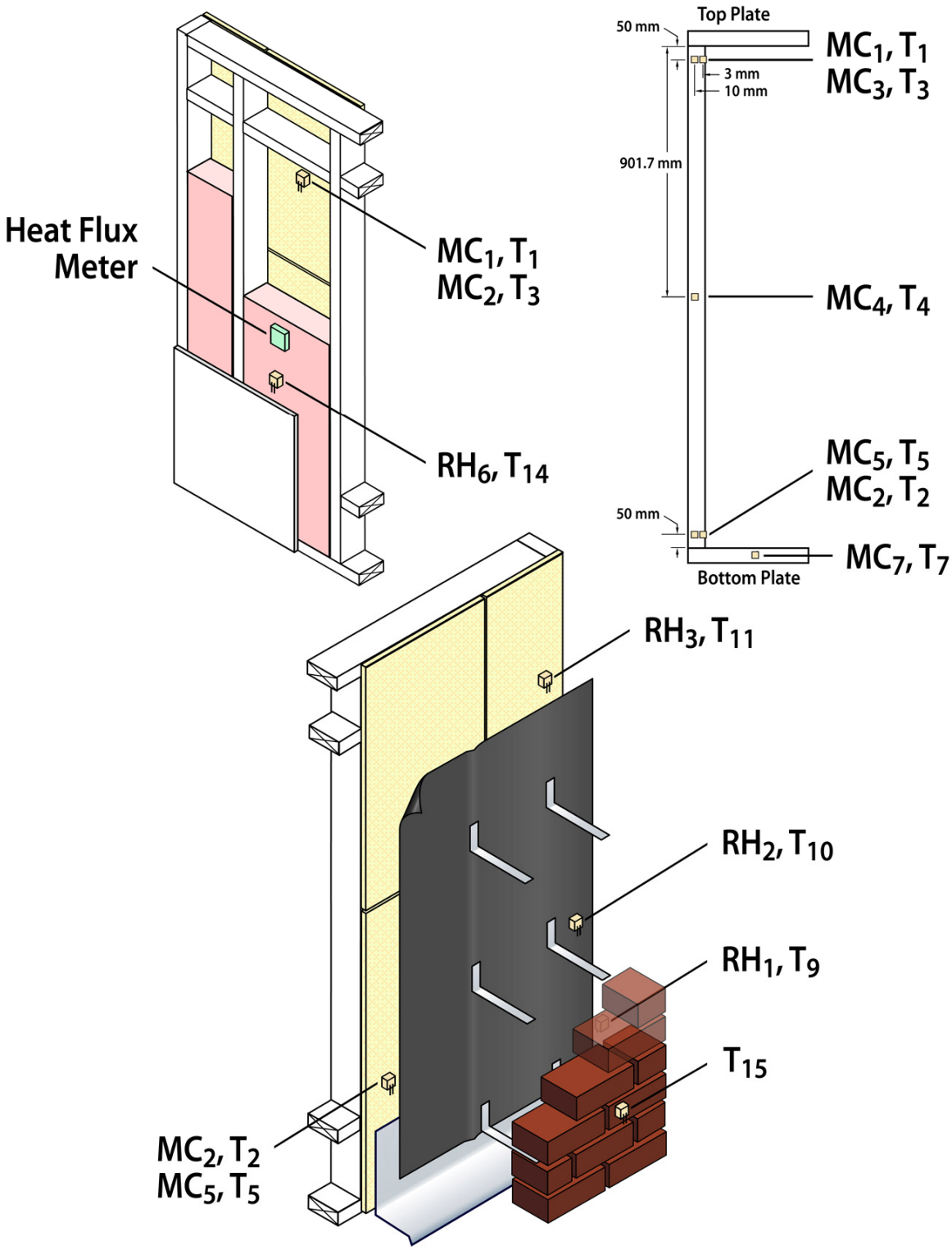

Figure 2: Instrumentation Configuration for Wall 14, and Wall 15

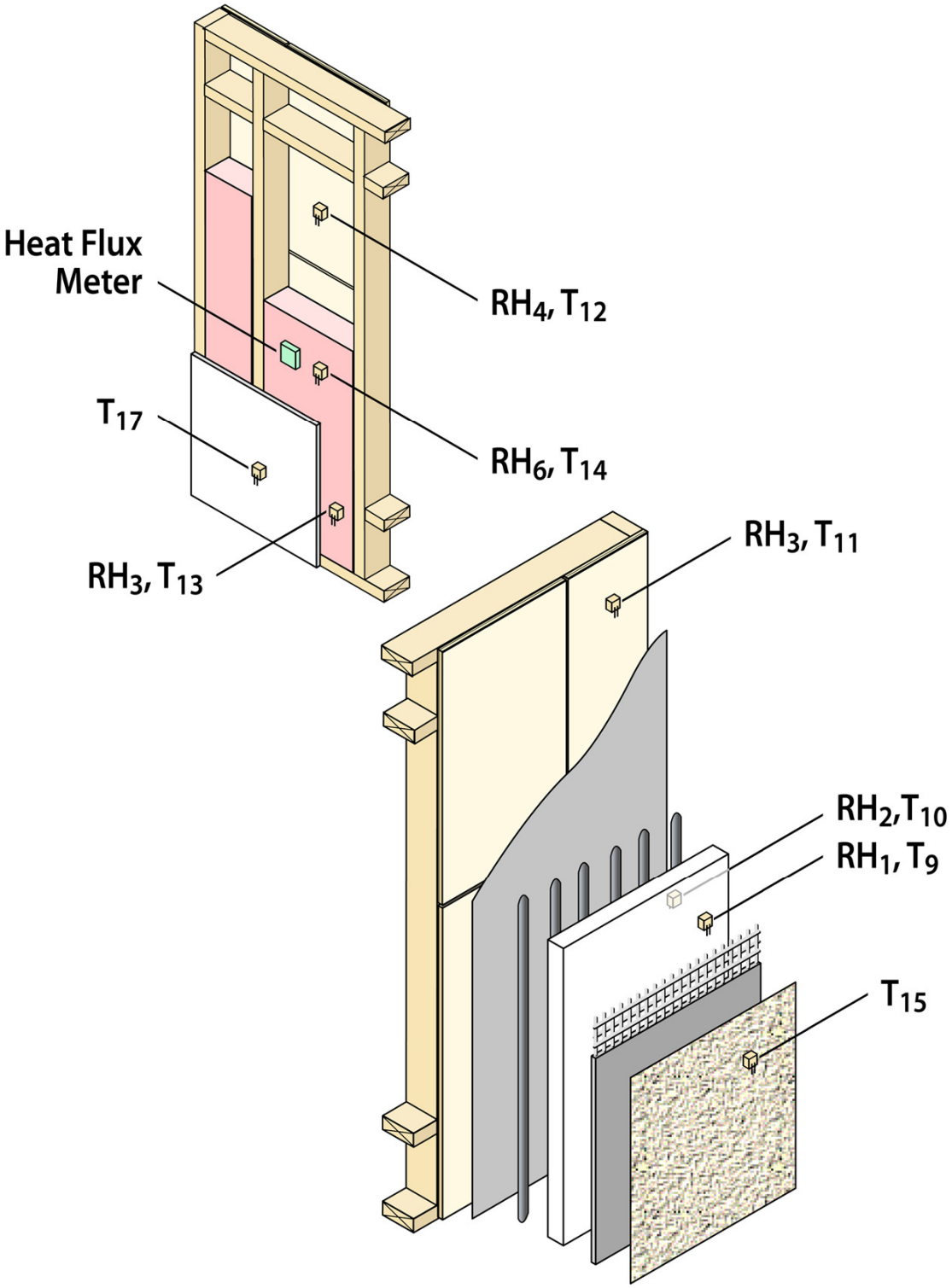

Figure 3: Instrumentation Configuration for Wood Framed Walls

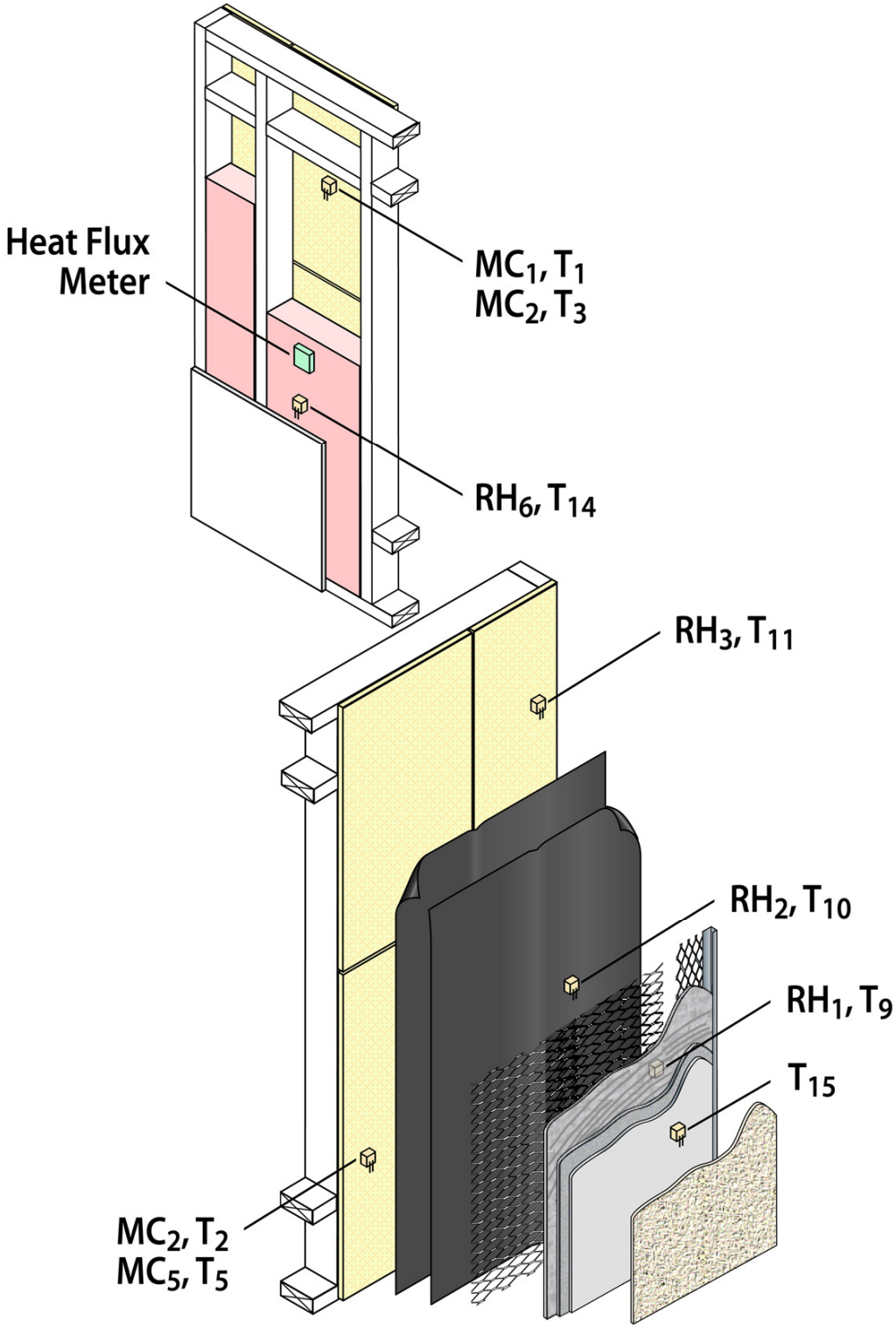

Figure 4: Instrumentation Configuration for Wood Framed Walls (Wall 12)

As displayed in Figures 1 through 4, the moisture contents (MC1,T1), (MC3,T3) are located 50 mm (2 in) below the top plate while (MC2, T2) and (MC5,T5) are located 50 mm (2 in) above the bottom plate. The difference between MC1, MC2, MC3 , and MC5 is the depth of the moisture pins at either 10 mm (3/8 in) or 3 mm (1/8 in) respectively.

MC1 and MC2 are closer to the exterior than MC3 and MC5. MC4, is located 901 mm (35 in) from the top plate into the sheathing board, while MC6 and MC7 are located in the top and bottom plate respectively. MC4, MC6 and MC7 are all located 3 mm (1/8 in) into the wood material. MC8 is located in the studs (steel (a small piece of wood is used) or wood) at 1000 mm (39 in) from the top plate.

The relative humidity sensors are placed in the following manner:

- RH1 is attached to the exterior face of the EPS or in contact with the inner most part of the brick/cement siding, or inner most surface of stucco. (Placed in the middle of stud cavity, TOP)
- RH2 is attached to the inner face of the EPS or water-resistive barrier for brick/cement siding/stucco (Placed in the middle of stud cavity, TOP)
- RH3 is bored into the exterior sheathing board (Placed in the middle of stud cavity)
- RH4 is attached to the interior sheathing board (Placed in the middle of stud cavity, Top)
- RH5 is attached to the interior sheathing board (Placed in the middle of stud cavity, Bottom)
- RH6 is attached to the exterior gypsum sheathing (Placed in the middle of stud cavity, Top)

Heat flux sensors were not available for all walls. Table 3 displays the wall systems that included heat flux sensors. The heat flux sensors were placed in the middle of the stud cavity at mid height of the wall. The purpose of the heat flux sensor is to provide a comparative heat flux amongst the instrumented wall systems, as the true heat fluxes through each of the walls would have required additional heat flux sensors or a calibrated box surround for each interior wall.

Table 3: List of Wall Assemblies with Heat Flux Transducers

System	EPS	Attachment	Drainage/ Air Space	Weather Barrier	Sheathing	Framing	Insulation	Vapor Barrier
EIFS #2 (**Panel 3**) (SE) With Flaw	1 ½" Flat	Notched Trowel	Vertical Ribbons	Liquid	Plywood	2 x 4@16"	R-11 Unfaced	None
EIFS #4 (**Panel 5**) (SE)	4" Flat	Notched Trowel	Vertical Ribbons	Liquid	Plywood	2 x 4@16"	0	None
EIFS #5 (**Panel 6**) (SE)	1 ½" Flat	Notched Trowel	Vertical Ribbons	Liquid	Plywood	18 ga @16"	R-11 Unfaced	None
EIFS #6 (**Panel 7**) (SE) With Flaw	1 ½"	Notched Trowel	Vertical Ribbons	Liquid	Plywood	2 x 4@16"	R-11 Unfaced	6-mil Poly
EIFS #7 (**Panel 9**) (SE)	1 ½" Flat	Mech. Fastened	Mat	House Wrap	OSB	2 x 4@16"	R-11 Unfaced	None
EIFS #8 (**Panel 10**) (SE) Ventilated	1 ½" Flat	Adhesive	Lath	Liquid	Plywood	2 x 4@16"	R-11 Unfaced	None
3 Coat #9 Portland Cement Plaster (**Panel 12**) (SE)	No	Mech. Fastened Note #2	3.4 Metal Lath	2-Layers Grade D 60 Minute	OSB	2 x 4@16"	R-11 Unfaced	None
Brick #10 (**Panel 14**) (SE)		NA	Air Cavity 1"	1-Layers Grade D 60 Minute	OSB	2 x 4@16"	R-11 Unfaced	None
Brick #11 (**Panel 15**) (SE) With Flaw		NA	Air Cavity 1"	1-Layers Grade D 60 Minute	OSB	2 x 4@16"	R-11 Unfaced	None
EIFS #13 (**Panel 17**)(NW)	1 ½" Flat	Notched Trowel	Vertical Ribbons	Liquid	Plywood	2 x 4@16"	R-11 Unfaced	None
EIFS #14 (**Panel 18**)(NW) With Flaw	1 ½" Flat	Notched Trowel	Vertical Ribbons	Liquid	Plywood	2 x 4@16"	R-11 Unfaced	None
EIFS #15 (**Panel 26**)(NW) Ventilated	1 ½" Flat	Adhesive	Lath	Liquid	Plywood	2 x 4@16"	R-11 Unfaced	None

CHARLESTON SC EXTERIOR ENVIRONMENTAL LOADS

Geographic Characteristics: Topographical Location

The test facility was located in the city of Hollywood, SC, 21 miles from the center of the city of Charleston. The Hollywood Baptist high school housed the facility. In Figure 5 the location in relation to the city of Charleston is shown. Figure 6 also includes the proximity between the NET facility and water (1.05 miles from the Toogoodoo Creek, 2.38 miles from the Wadmalaw River and 12.59 miles from the Atlantic ocean). The very close proximity to water ensured that the conditions at the test facility were very humid and this was one of the criteria for selection of the site.

Figure 5:The proximity of the NET facility to Charleston, SC.

Figure: 6 The proximity of the NET facility to water.

Historical Data for Charleston SC

Historical data from 1961 to 1990 were averaged and the annual average precipitation is contoured for the state of South Carolina and plotted in Figure 7. From this contour map (SCAS website, and NOAA/USDA-NRCS data) Charleston, SC receives an annual precipitation of approximately 48 to 52 inches of rain.

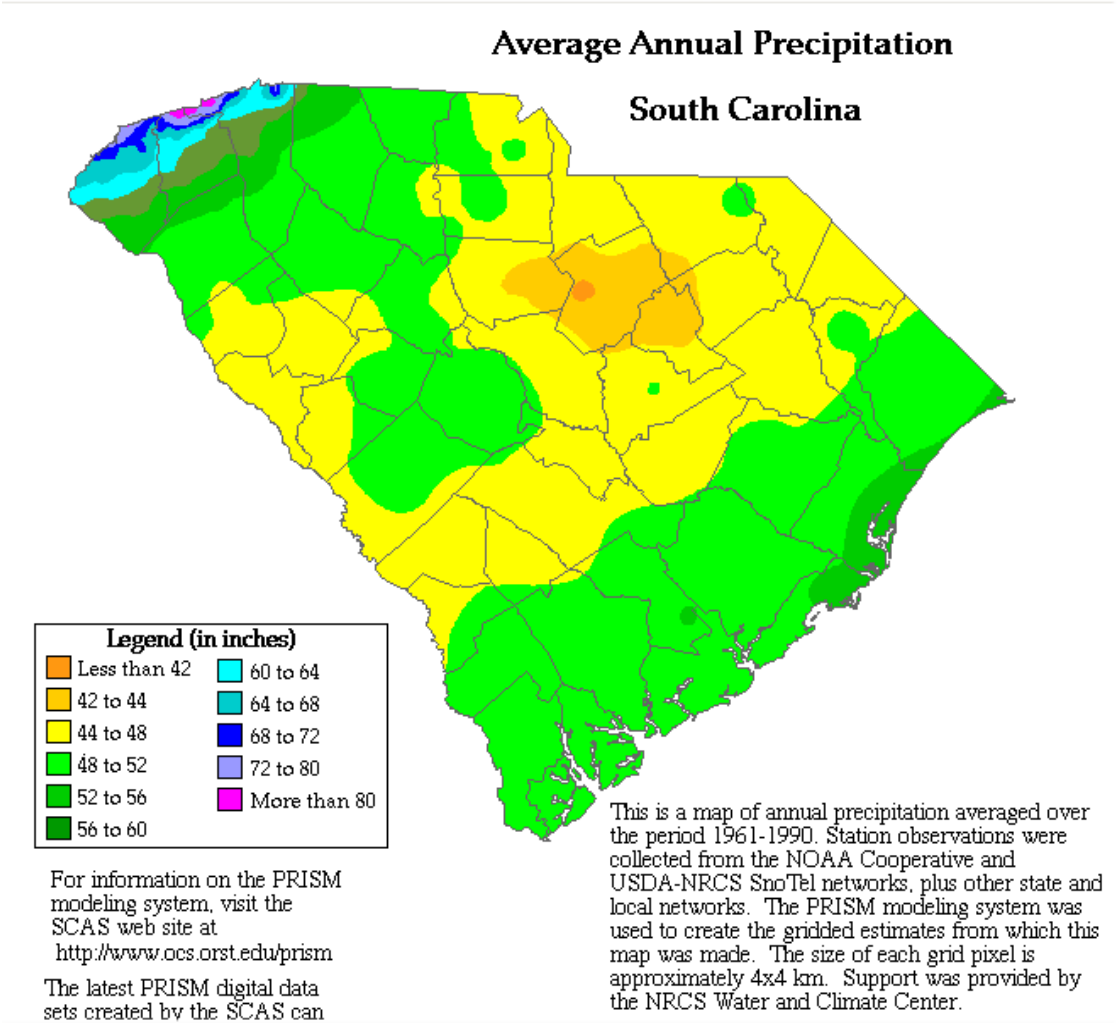

Figure 7: The proximity of the NET facility to Charleston, SC.

To further analyze the climatic conditions near the test facility, Table 4 provides an even larger sampling period 1738 to 1990 for the average monthly rainfall in Charleston, SC and from 1823 and 1990 for average monthly temperatures. The data tables were extracted from the website www.worldclimate.com. From this data, Charleston, SC is shown to have an average annual temperature of 66 ºF and annual rainfall of 48 inches which are in excellent agreement with rain data plotted in the contour plot above for the monitoring period between 1961 to 1990. The highest rainfall is shown to occur during the summer months (July and August receive approximately 6.5 inches of rain).

Table 4: Charleston, SC Average Monthly Rainfall and Temperatures

CHARLESTON/MUN.,SC., UNITED STATES OF AMERICA WorldClimate

Weather station **CHARLESTON/MUN.,SC.** is at about 32.90°N 80.00°W. Height about 14m / 45 feet above sea level.

Average Rainfall

	Jan	Feb	Mar	Apr	May	Jun	Jul	Aug	Sep	Oct	Nov	Dec	Year
mm	75.6	79.6	89.7	63.2	87.3	132.6	169.6	165.4	131.3	85.9	60.7	79.2	1220.9
inches	3.0	3.1	3.5	2.5	3.4	5.2	6.7	6.5	5.2	3.4	2.4	3.1	48.1

Source: CHARLESTON/MUN.,SC. data derived from GHCN 1. 2314 months between 1738 and 1990

CHARLESTON/MUN.,SC., UNITED STATES OF AMERICA WorldClimate

Weather station **CHARLESTON/MUN.,SC.** is at about 32.90°N 80.00°W. Height about 14m / 45 feet above sea level.

24-hr Average Temperature

	Jan	Feb	Mar	Apr	May	Jun	Jul	Aug	Sep	Oct	Nov	Dec	Year
°C	9.7	10.8	14.1	18.1	22.5	25.8	27.2	26.8	24.6	19.4	14.4	10.5	18.7
°F	49.5	51.4	57.4	64.6	72.5	78.4	81.0	80.2	76.3	66.9	57.9	50.9	65.7

Source: CHARLESTON/MUN.,SC. data derived from GHCN 1. 2014 months between 1823 and 1990

The timeframe for Phase II of the EIMA/ORNL/DOE research study spanned between June 2006 and July 2007. A number of conclusions have been developed from the measured data for the performance of EIFS and various other wall systems. To be able to generalize the findings, it becomes important to characterize the exterior climate during this monitoring period and compare it to past historical data. In Figure 8, the temperatures for continental USA is shown and is compared to past historical data. This data was compiled by the Oregon Climate Service (http://www.ocs.oregonstate.edu/index.html) and the data graphs were downloaded from the web site. (http://www.ncdc.noaa.gov/oa/climate/research/2007/may/12month.html.)

As shown in Figure 8, the temperature data is for the period of June 2006 through May 2007. The temperatures for the region surrounding Charleston, SC indicates that during Phase II testing the temperatures are within normal conditions. In Figure 9, results for rainfall also show conditions were very representative of climate norms as well. The exterior climate (temperature and rainfall) were within the normal long term conditions and the wall monitored data are representative of results typically present in Charleston, SC.

The average annual temperature during 2006 for the contiguous U.S. was the 2nd warmest on record and within 0.1°F of the record set in 1998 as presented in http://www.ncdc.noaa.gov/img/climate/research/2006/ann/01-12Statewidetrank_pg.gif.

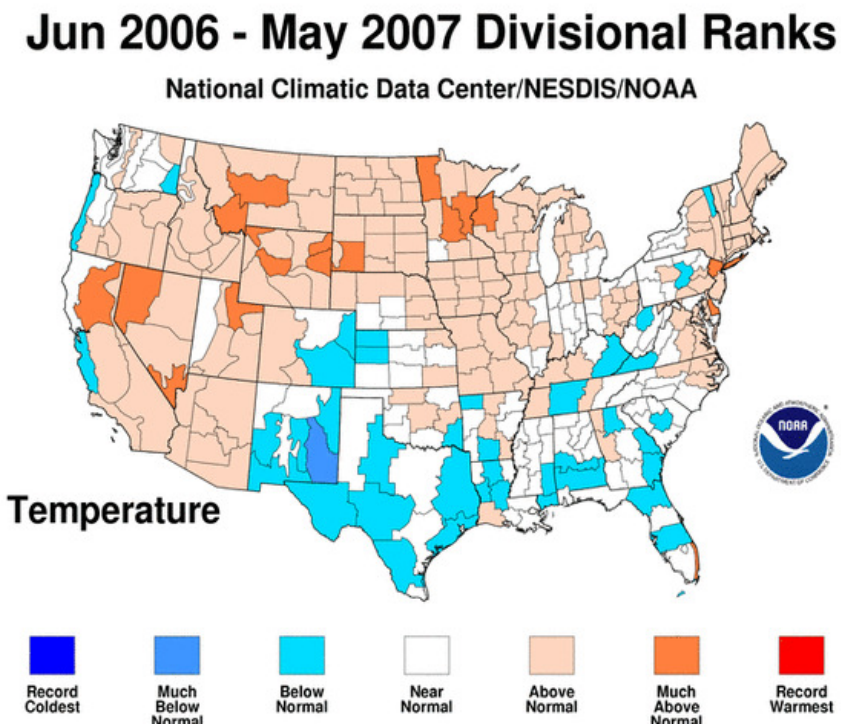

Figure 8: Comparison of Temperatures with Historical norms for June 2006 and May 2007

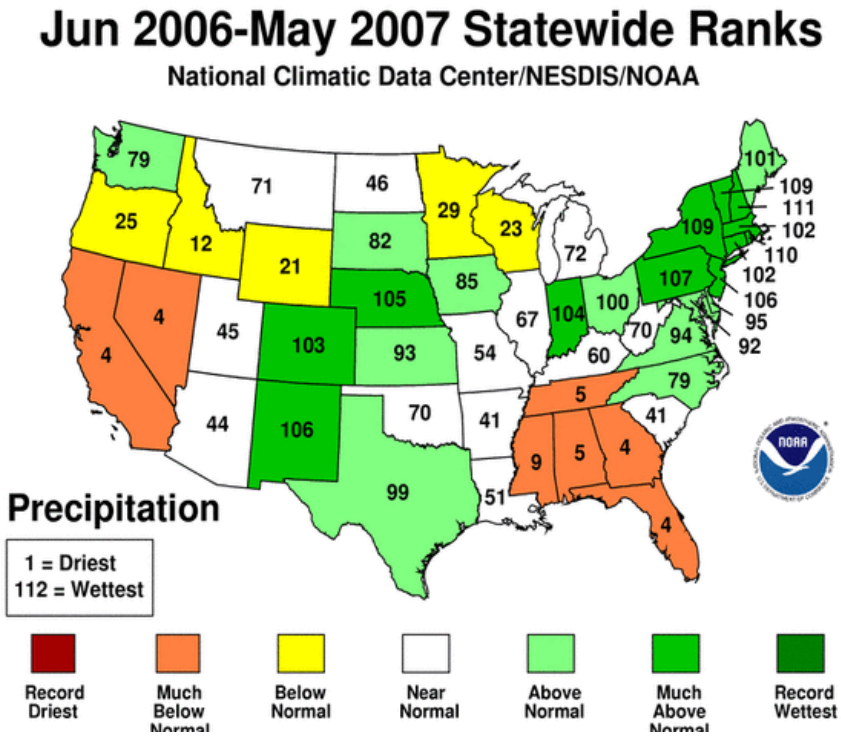

Figure 9: Comparison of Temperatures with Historical norms for June 2006 and May 2007

In Figure 10, the IECC (International Energy Code Council) zones are also shown. These were used by the IECC to develop a method in determining the appropriate application of vapor retarder requirements based on environmental mapping. It is obvious that in the development of Figure 10, a thorough hygrothermal climate analysis was not performed. It is primarily an energy based map. From this map it is clear that Charleston, SC is classified as a Warm Humid climate that lies in Zone 3.

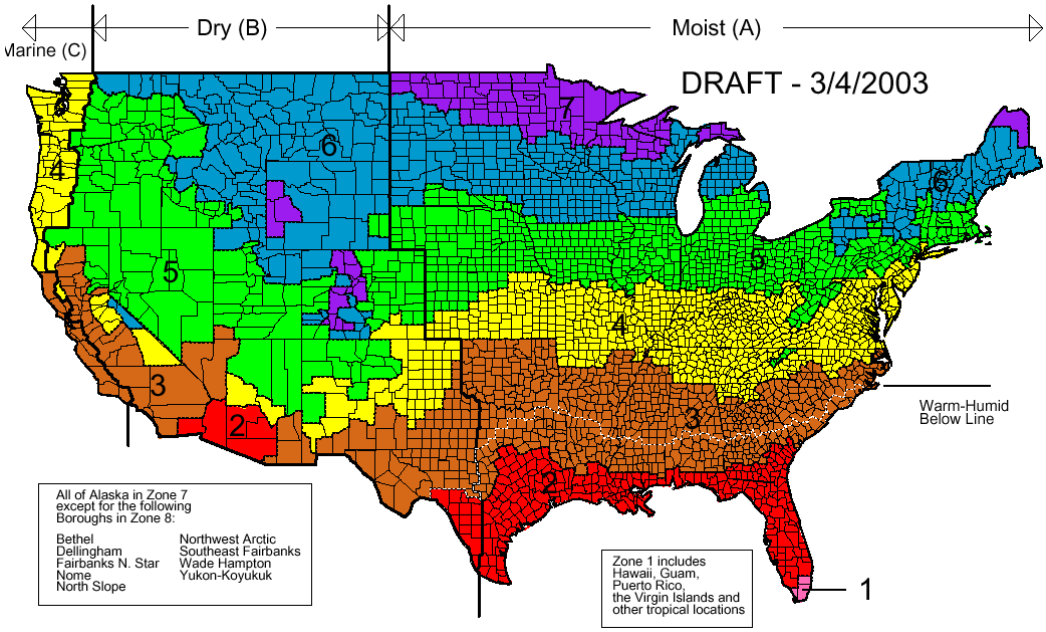

Figure 10: IECC ZONES

Measured Interior and Exterior Environmental Conditions

Figure 11, plots the monthly averaged exterior and interior relative humidity for the period spanning between June 2006 and Jun 2007. The interior relative humidity was controlled using a dedicated HVAC system which provided higher interior moisture loads at different periods of the year. The Charleston NET facility is partitioned into two segments, room 1 and room 2. Both interior relative humidity conditions are displayed in Figure 11 showing negligible differences between these two rooms.

In Figure 12, the monthly averaged temperatures are displayed for both the exterior and interior conditions. Again minor differences exists between room1 and room 2, especially after December 2006 when a fan was installed between the two rooms ensuring air flow between them. The interior temperatures varied between 19 ˚C and 21 ˚C (66.2 °F and 69.8 °F).

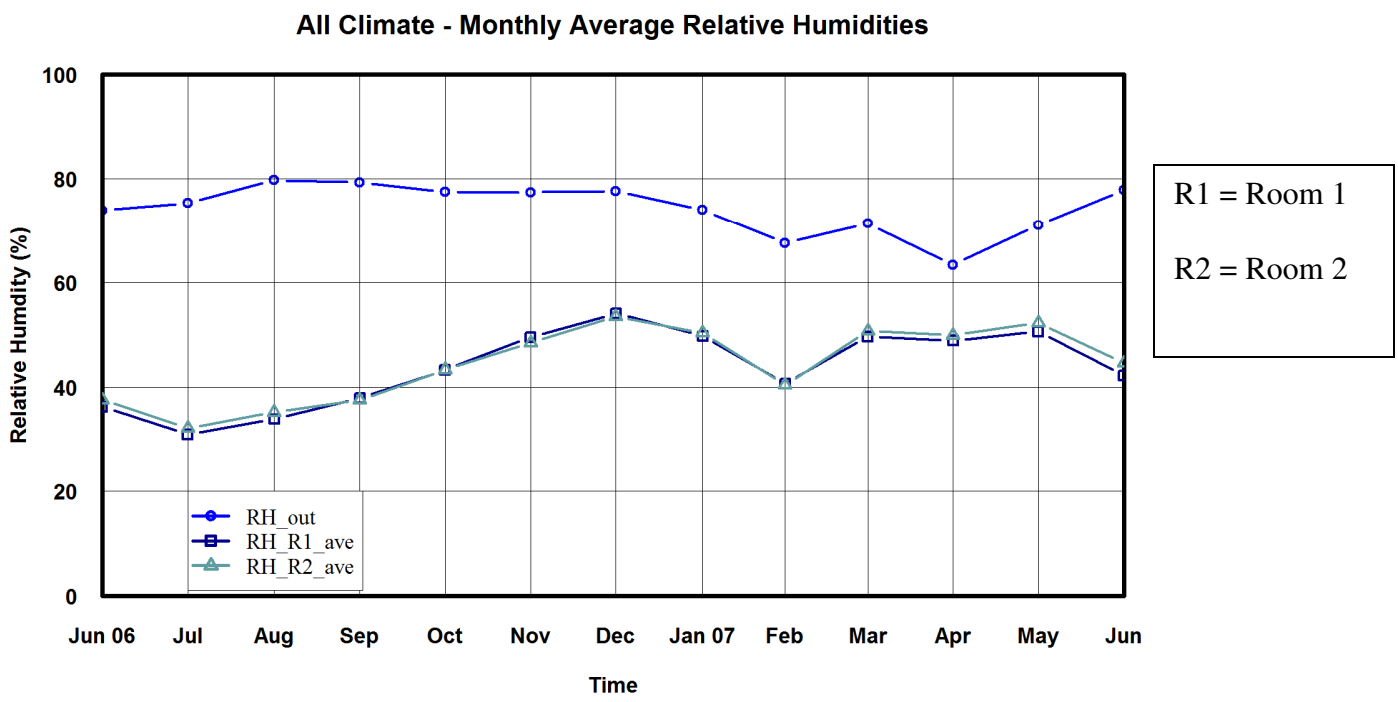

Figure 11: Phase II monthly averaged Relative Humidity (%) as a function of time

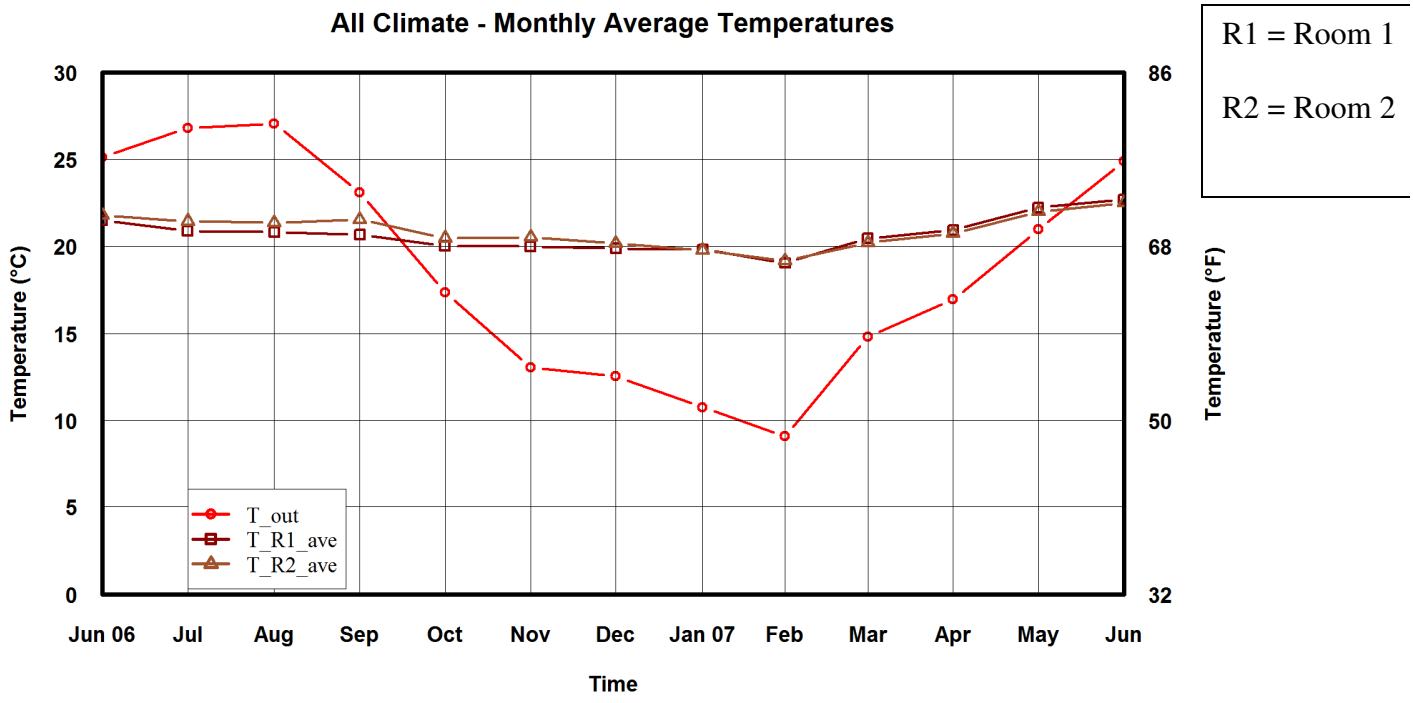

Figure 12: Phase II monthly averaged Temperature as a function of time

HYGROTHERMAL MATERIAL PROPERTY CHARACTERIZATION

MATERIAL PROPERTIES

Introduction

In this part of the report, the hygrothermal material properties for a selected number of materials used in the Charleston (Hollywood) NET wall facility and measured at the Oak Ridge National Laboratory are presented. Material properties are needed for a number of strategic reasons. The first is to provide the transport coefficients for the advanced hygrothermal modeling activity, and secondly, to provide insight on the various field observed differences in the wall performances. Measurement of the hygrothermal material properties at ORNL involved the participation of Phil Childs (Responsible at ORNL), Jerry Atchley, Ken Wilkes and Achilles Karagiozis. Materials were shipped to ORNL by Mr. Hardman (Net Facility Manager). The materials were randomly selected during the construction period of the walls. The majority of the material properties reported have been completed but some still are undergoing measurements at ORNL (suction isotherms). The results presented in this part of the report are the progress to date on the various materials that have been measured.

This part of the report gives results of the DOE/EIMA sponsored project for several hygrothermal properties that were measured on the same building material products used in the wall construction at the Hollywood, SC test facility. The properties that were measured were water vapor permeance, sorption isotherm, suction isotherm, and liquid uptake. Table 5 lists the materials used in the investigation.

EXPERIMENTAL PROCEDURES

A number of key hygrothermal material properties are needed to characterize the transport of moisture through building envelope systems. These material properties need to be measured as a function of the driving potential. Below is a list naming the most important ones that have been measured at the ORNL advanced hygrothermal material property laboratory:

1) Sorption isotherms in the hygroscopic regime (as a function of relative humidity)
2) Suction isotherms in the capillary regime (this effort is still ongoing) (as a function of moisture content/RH)
3) Water vapor permeance in both regimes (as a function of relative humidity)
4) Liquid diffusivity in the capillary regime (as a function of moisture content)

In Figures 13 through 20 the test facility with the various measurement apparatus is shown. Material samples are also displayed to indicate the material sample size used.

Figure 13: Climate Controlled (Temperature & Relative Humidity) Chamber

Figure 14: Desiccant Temperature Control Drying Oven

Figure 15: Water Vapor Permeance Test Specimens

Figure 16: Pressure Plate Apparatus

Figure 17: Liquid Uptake Apparatus

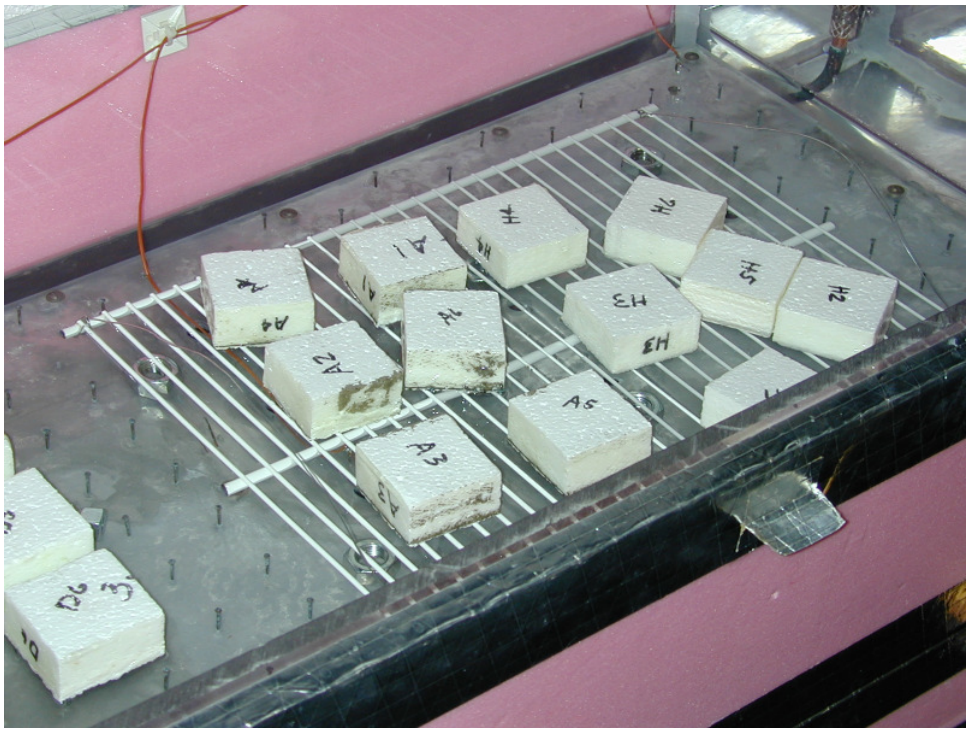

Figure 18: Samples for Liquid Uptake Measurements

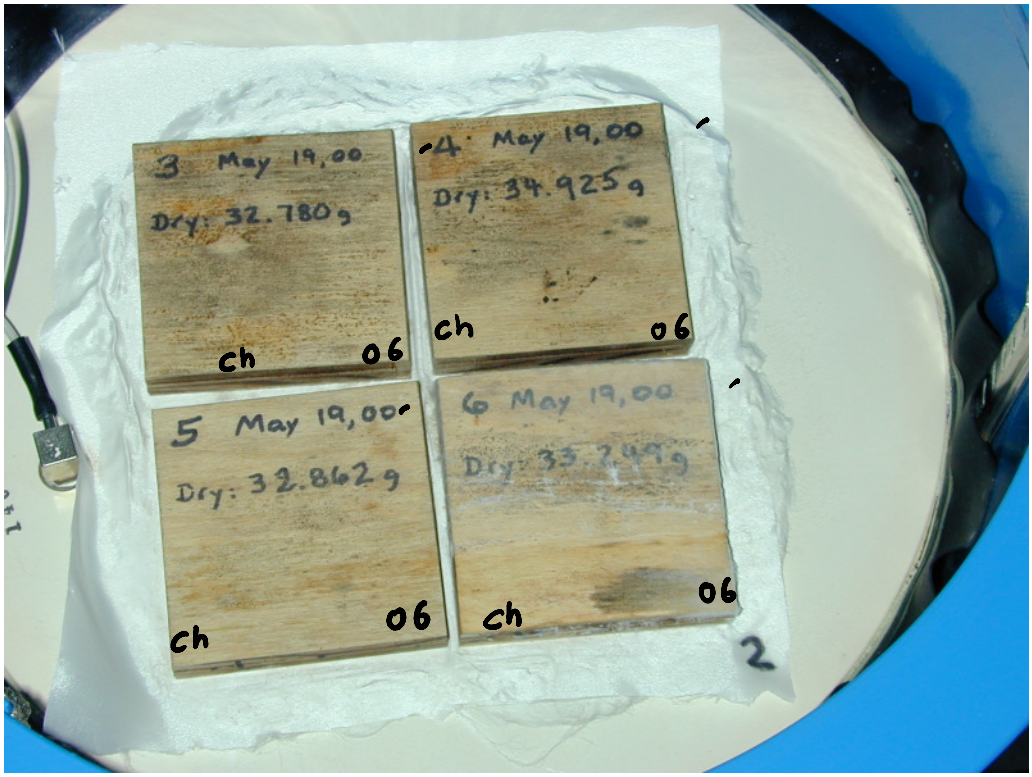

Figure 19: Samples for Capillary Suction Isotherms

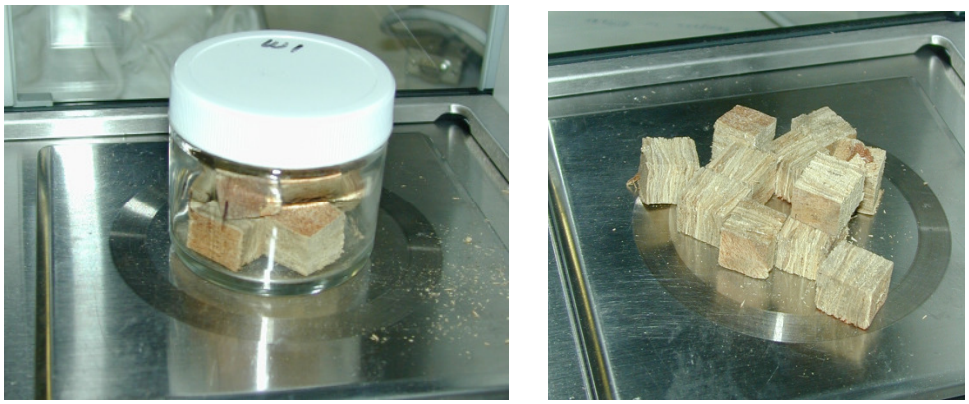

Figure 20: Samples for Hygroscopic Sorption Isotherms

Water Vapor Permeance Measurements

Water vapor permeance measurements were made according to ASTM E 96-00, Standard Test Methods for Water Vapor Transmission of Materials. Both wet and dry cup measurements were performed. Specimens were sealed with wax to the openings of PVC cups. The cups had internal diameters of about 5.55 inches, and the walls and bottoms of the cups were about 0.5 inch thick. The cups contained either distilled water (to provide 100% RH inside the cup) or anhydrous calcium chloride desiccant that had been baked at 400°F (204°C) (to provide near 0% RH inside the cup). The air space between the specimen and the water was about 0.5 inch, and was about 0.25 inch between the specimen and the desiccant. Different specimens were used for the wet and dry cup measurements. The cups were placed in environmental chambers that were maintained at 73.4°F (23°C) and at relative humidities of 50%, 70%, or 90%.

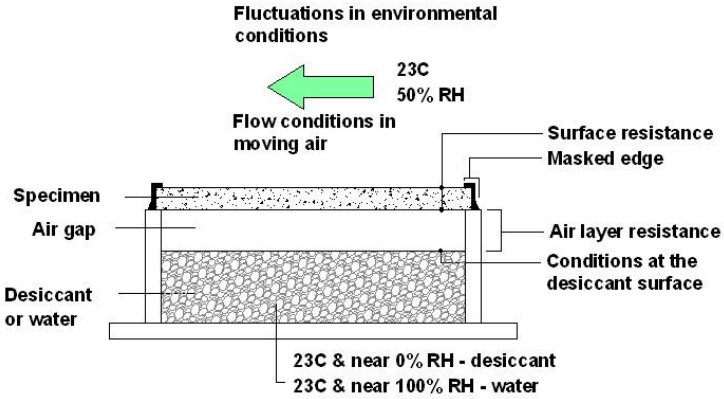

Figure 21: Wet cup test is similar to the dry cup setup

Wet cup test setup is similar to the dry cup setup. With one exception, the moisture sink is replaced with a moisture source i.e., distilled water. Distilled water is used to generate near 100% RH. The cups are kept in an environmental chamber with temperature and relative humidity controlled at 23±0.1°C and 50±1% RH, respectively.

The ASTM E96 WVT standard does not provide guidelines on variability of boundary conditions in WVT test with highly permeable construction materials. However, such knowledge is required to generate repeatable and reproducible results. Two critical aspects that must be verified:

- Reproducibility of vapor pressures
- Ability to maintain stable vapor pressures throughout the test

In any subsequent modeling analysis, the measured ASTM E96 data should be further analyzed to provide the actual transport coefficients.

Sorption Isotherm (Hygroscopic Regime)

Determination of sorption isotherms is based on well established thermodynamic principles. In an enclosed system, a hygroscopic material will reach equilibrium moisture content with the surrounding environment. When the initial moisture content in the material is lower than the equilibrium moisture content (i.e. relative humidity in the surrounding environment), water vapor is absorbed from the air in the surrounding space resulting in an increase of the specimen's mass. As long as moisture continues to be absorbed, the mass of the specimen will continue to increase until equilibrium conditions are reached. The rate at which this increase takes place decreases as the equilibrium is being approached. Consequently, when the initial moisture content of the material is higher than the equilibrium moisture content the specimen moisture desorbs from the material and its mass decreases until equilibrium is reached under desorption. The change in mass is determined gravimetrically using an analytic balance. Material storage in a hygroscopic range can be quantified for moisture contents ranging from near 0% RH up to approximately 95% RH.

Sorption isotherm measurements were made according to ASTM C 1498-04, Standard Test Method for Hygroscopic Sorption Isotherms of Building Materials. Triplicate specimens consisted of about 15 grams (0.0331 lb) each of material cut into small pieces. The specimens

were placed into 60 ml flint glass jars with tightly-fitting polypropylene lids from which the cardboard liners had been removed. Measurements were started at the lowest RH, and after equilibrium was reached, the specimens were transferred to the next higher RH until measurements had been made over the range of RH. After tests at the highest RH, measurements were repeated in the reverse order to obtain desorption isotherms. The moisture content reported is the average of the three specimens, see Figure 22. Table 5 lists different salts and the corresponding vapor pressures at an operating temperature of 25°C.

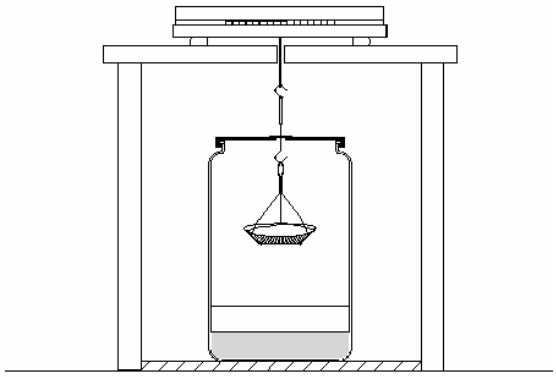

Figure 22: Experimental set-up utilized in conducting sorption isotherm measurements (Pazera et al [2006] [2004])

Table 5: Relative humidity corresponding to different saturated salt solutions at 25°C.

Type of salt	RH [%] at 25°C	Type of salt	RH [%] at 25°C
Cesium fluoride	3.39 ± 0.94	Sodium bromide	57.57 ± 0.40
Lithium bromide	6.37 ± 0.52	Cobalt chloride	64.92 ± 3.50
Zinc bromide	7.75 ± 0.39	Potassium iodide	68.86 ± 0.24
Potassium hydroxide	8.23 ± 0.72	Strontium chloride	70.85 ± 0.04
Sodium hydroxide	8.24 ± 2.1	Sodium nitrate	74.25 ± 0.32
Lithium chloride	11.30 ± 0.27	Sodium chloride	75.29 ± 0.12
Calcium bromide	16.50 ± 0.20	Ammonium chloride	78.50 ± 0.40
Lithium iodide	17.56 ± 0.13	Potassium bromide	80.89 ± 0.21
Potassium acetate	22.51 ± 0.32	Ammonium sulfate	80.99 ± 0.28
Potassium floride	30.85 ± 1.30	Potassium chloride	84.34 ± 0.26
Magnesium chloride	32.78 ± 0.16	Strontium nitrate	85.06 ± 0.38
Sodium iodide	38.17 ± 0.50	Potassium nitrate	93.58 ± 0.55
Potassium carbonate	43.16 ± 0.39	Potassium sulfate	97.30 ± 0.45
Magnesium nitrate	52.89 ± 0.22		

Upon reaching equilibrium, plotting moisture content as a function of relative humidity generates sorption isotherm. Figure 23, shows a typical construction material with the hygroscopic and capillary regions.

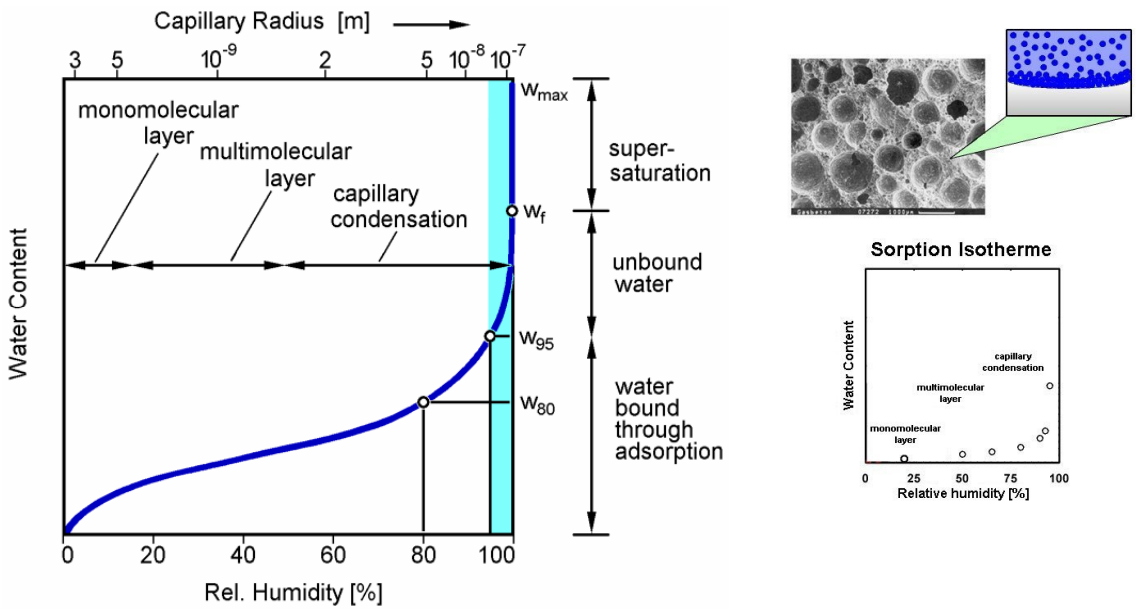

Figure 23: Sorption-Suction Isotherms

Suction Isotherm

Pressure Plate Measurements

Suction isotherm measurements are also not covered by an ASTM standard. The method is described as follows. Specimens were about 2 inch (50 mm) squares, and were saturated by being placed under about 4 inches (101.6 mm) of distilled water. The relative humidity in the pressure vessels was obtained from the measured air pressure via the chemical potential. Tests were started at the lowest applied pressure (highest relative humidity) and progressed through a series of higher applied pressures. After equilibrium at each pressure, the specimens were removed from the pressure vessels and weighed. After completion of the sequence of pressure tests, the specimens were dried, and the moisture content was calculated as a percentage of the dry weight.

Principle: Determination of equilibrium MC at relative humidity above 95% RH is not reliable with the use of sorption isotherm approach. The principles of pressure plate

measurements have been well known and widely used for decades in the field of soil science. Each porous plate consists of a porous ceramic plate covered on one side with a thin neoprene diaphragm. Mounted between the diaphragm and the underside of the porous plate is an internal screen, which accommodates the passage of the water. Figure 24 illustrates the pressure vessel with a horizontally mounted ceramic pressure plate.

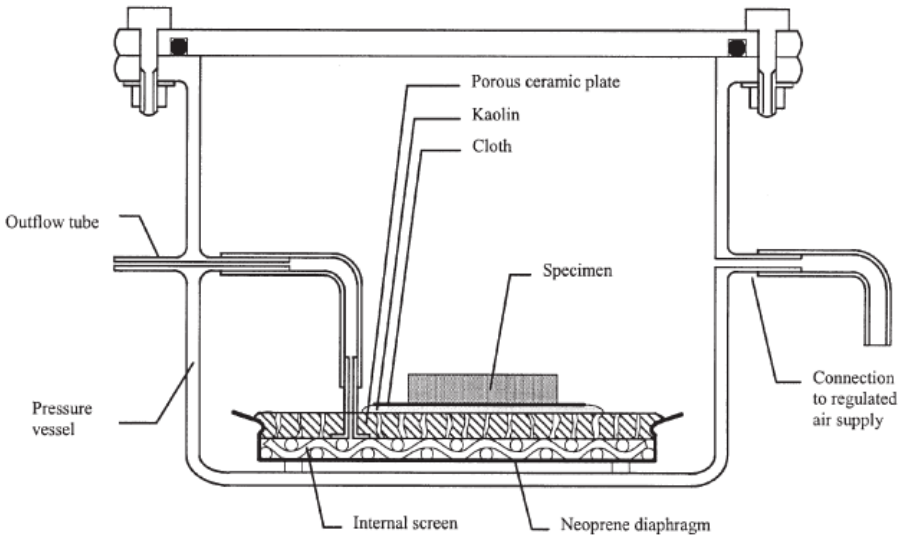

Figure 24: Cross-section for a typical pressure plate with a porous material placed on the porous membrane

Therefore pressure plates are utilized to measure equilibrium MC in a high end of the full relative humidity range. A fully saturated specimen (with its lateral sides sealed airtight) is places on the porous plate inside the test vessel. A kaolin powder is utilized as the interface material between the material being tested and the porous plate to maintain the hydraulic contact. Following the gravimetric reading, the specimen is placed back in the vessel, flooded with water to establish hydraulic contact and the air pressure level is increased. During the subsequent readings the level of equilibrium pressure inside the vessel is increased so that more liquid distills out of the specimen. This process is repeated until enough data points from both pressure plates and sorption isotherms combined exists to construct a moisture retention curve.

Liquid Diffusivity

Liquid diffusivity measurements are not covered by an ASTM standard. The method is described as follows. Specimens were about 2 inches (50 mm) square, and the edges were sealed with epoxy. The finished face of the specimen was brought into contact with a liquid water surface. The epoxied edges prevent liquid water from penetrating the edges and also prevent water from evaporating from the edges, thus ensuring one-dimensional flow of liquid and water vapor in the thickness direction. The specimens were in contact with the water surface for a total of about 4 hours. The specimens were periodically removed from the water tank and weighed. A plot of mass gain versus the square root of the exposure time gives an initial linear portion that is analyzed to calculate the liquid diffusivity.

Principle: This measurement (test) is used in estimating capillary liquid transport taking place in the material. When the material is brought in contact with free water surface, liquid begins to enter the pore matrix. The sides of the specimen are sealed with an appropriate sealant to impart 1-D moisture transport. Initially, a small volume of material at the water interface becomes saturated, the gradient begins to build and water is absorbed by capillaries. The degree and the rate of filling of the pore matrix within the material is highly dependent on the porosity of the material, pore size distribution, and other physical factors such as the height of the specimens being tested. During the test, gravimetric weights of the specimen are taken at predetermined intervals. The cumulative mass increase per surface area is plotted as a function of the square root of time. The cumulative water inflow is fitted to an empirical model (Equation 1).

$$i = A_0 + A_w t^{1/2} \qquad (4)$$

where: Ao is an intercept, Aw is the water absorption coefficient

The absorption coefficient is represented by slope of a liquid inflow (determined gravimetrically) through a specific surface area as a function of t1/2:

$$\Delta m / a = A_w t^{1/2}$$

$$\begin{aligned} \text{where} \quad \Delta m &= \text{mass gain of inflowing liquid} \\ a &= \text{surface area at the inflow} \\ A_w &= \text{water absorption coefficient} \end{aligned} \tag{5}$$

A linear relationship with t1/2 has been confirmed in case of numerous homogenous building materials. Figure 25 shows a plot of cumulative water inflow as a function of square root of time.

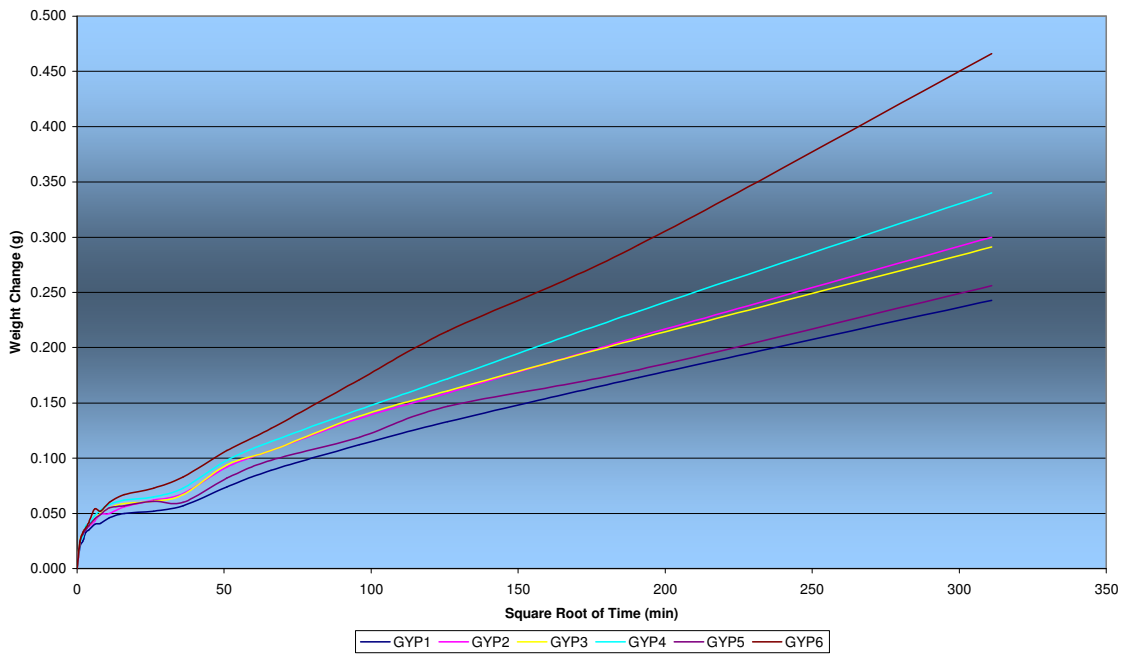

Figure 25: Weight Change plotted as functions of square root of time (min) for a 0.5 inch gypsum board.

Table 6: Material list provided for testing.

Materials Tested
Brick Phase II
60 Min Paper
Wallpaper
Tyvek
Brick Phase I
Gypsum&Primer
Gypsum&paint
Gypsum
OSB
Plywood
MemBrain Phase I

Measured hygrothermal data

ORNL staff (Mr. Childs , Dr. Wilkes, and Mr. Atchley) prepared the samples and executed the tests needed to arrive at the standard hygrothermal properties that are commonly presented as a function of the relative humidity or moisture content. These are labeled here as fundamental material properties, and were further processed to derive the transport properties used in the hygrothermal simulation validation activity. The results presented below are those commonly found in both ASTM and ASHRAE handbooks and are reported in a number of companies literature.

In Table 6, the measured water vapor permeance (Perms as a function of relative humidity) are shown for the following materials:

1) OSB (used as wall sheathing board)
2) Plywood (used as wall sheathing board)
3) Gypsum board painted with 1 coat of primer and 1 coat of latex paint
4) Gypsum board painted with 1 coat of primer and 1 coat of oil paint
5) Jumbo-Tex water-resistive barrier paper (used in wall assemblies)
6) Jumbo-Tex HD water-resistive barrier paper
7) Super Jumbo-Tex water-resistive barrier paper
8) Unpainted Gypsum Board
9) Painted Cement Board
10) MemBrain (climatically tuned vapor retarder)

Water Vapor Transmission

In Appendix B, the raw data are shown for the measurements performed for the water vapor transmission. Plots of mass versus time for the cup/specimen assemblies were obtained from the measure time plots. Each cup was weighed periodically to obtain eight or more readings. Selected portions of the plots were fitted to linear equations, and the slopes were used with the cup opening and inside-outside RH difference to calculate the permeance of the specimen, as given in E-96. Several data points were used to obtain the slopes.

The property values for the water vapor permeances are displayed numerically in Table 3. All these results are not flux corrected but corrected for ASTM E96.

Table 7: Material list provided for testing – Water Vapor Permeance

RH, %	OSB	Plywood	Jumbo Tex	Membrain
25	1.25	0.89	31.00	0.93
35	1.34	1.29	32.00	1.47
45	1.88	2.78	34.00	3.25
75	6.10	13.65	52.00	14.50
85	12.00	21.00	65.67	21.77
95	23.75	49.00	150.00	54.90

Table 8: The Water Vapor Permeance data for Tested Samples

Wet Cup						
Material Set	**Uncorrected Perms**			**Corrected Perms**		
	100/90	**100/70**	**100/50**	**100/90**	**100/70**	**100/50**
Brick 2 – 1	80	19	21	56	17	18
Brick 2 – 2	83	22	26	57	20	22
Brick 2 – 3	112	31	24	68	25	21
60 Min Paper – 1	84	59	46	168	93	65
60 Min Paper – 2	65	46	36	105	64	47
60 Min Paper – 3	65	47	36	105	66	47
Wallpaper – 1	0.6	0.6	-	0.6	0.6	-
Wallpaper – 2	2.1	1.6	-	2.1	1.6	-
Wallpaper – 3	0.5	0.6	-	0.5	0.6	-
Wallpaper – 4	0.5	0.6	-	0.5	0.6	-
Tyvek – 1	72	74	65	125	134	110
Tyvek – 2	81	82	71	153	161	128
Tyvek – 3	76	76	69	137	140	122
Tyvek – 4	75	77	68	134	144	118
Brick 1 – 1	6	11	19	6	11	18
Brick 1 – 2	5	8	19	5	8	18
Brick 1 – 3	4	9	17	4	9	16
Block – 1	378	199	43	105	80	32
Block – 2	343	210	41	105	85	31
Block – 3	274	197	25	96	82	21
Gypsum&Primer - 1	38	21	14	49	24	16
Gypsum&Primer - 2	33	19	13	41	21	14
Gypsum&Primer - 3	40	23	15	52	28	16
Gypsum&Primer - 4	34	20	12	43	23	14
Gypsum&paint – 1	45	25	15	61	29	17
Gypsum&paint – 2	53	31	17	78	39	19
Gypsum&paint – 3	45	29	12	62	36	14
Gypsum&paint – 4	45	26	12	61	31	13
Gypsum – 1	98	82	58	231	165	92
Gypsum – 2	92	78	57	202	150	89
Gypsum – 3	93	79	55	203	151	85
Gypsum – 4	92	79	57	202	153	89
OSB – 1	21	24	21	24	28	24
OSB – 2	24	23	19	28	27	21
OSB – 3	21	22	17	24	26	19
Plywood – 1	33	31	26	41	38	31
Plywood – 2	24	27	20	28	32	23
Plywood – 3	25	25	22	30	29	25

Sorption Isotherm

Sorption isotherm data for the concrete block material is shown in Figure 26. Since the specimens can be weighed to the nearest 1 mg and the specimen mass is about 15 grams, the resolution of the moisture content is about 0.01%. According to ASTM C 1498, moisture content data would be reported to the nearest 0.1%. However, since the moisture contents were so small, the data are reported to the resolution of the measurements.

In Figures 27 to 32 the sorption isotherm are displayed for a number of NET materials.

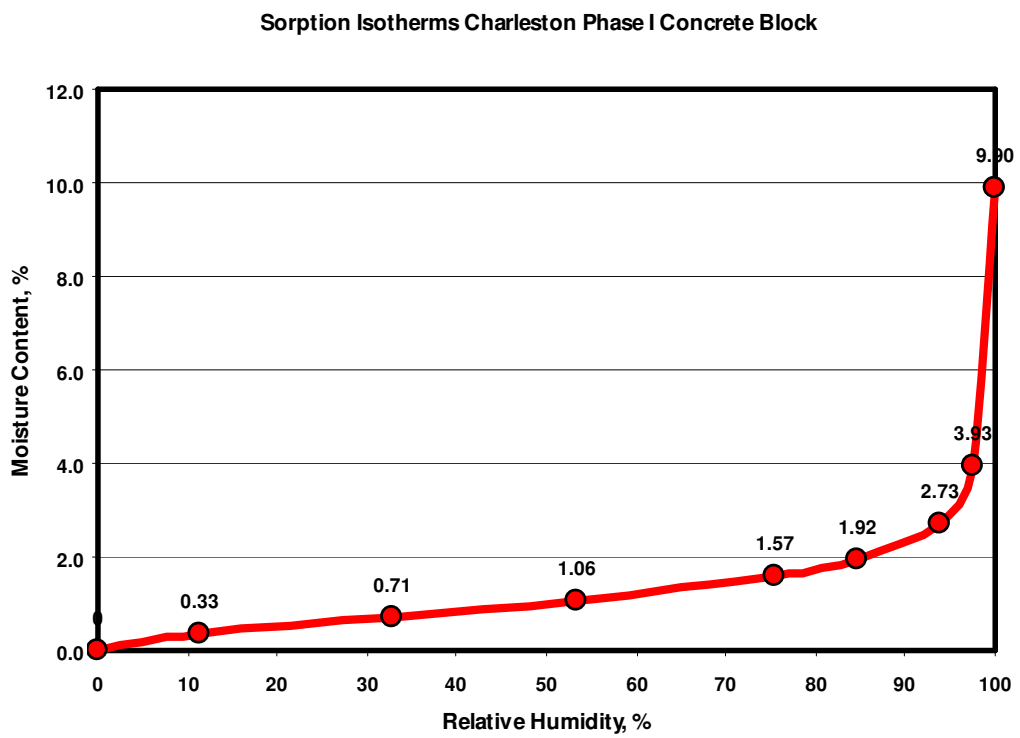

Figure 26: Sorption Isotherms as a function of the Average Relative Humidity (%)

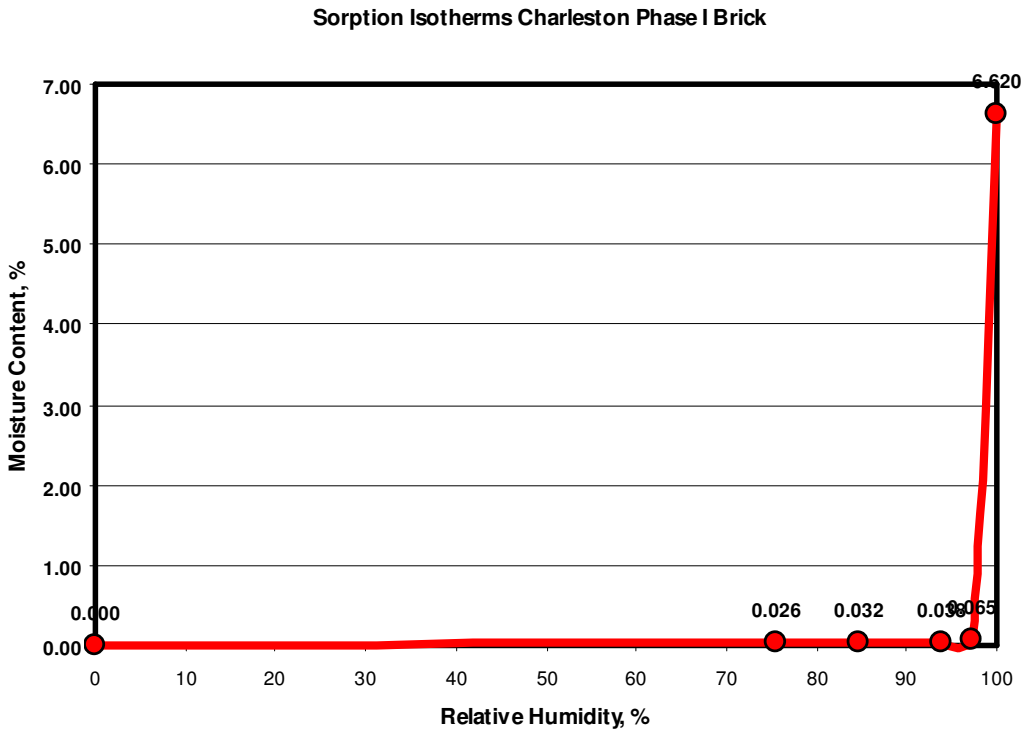

Figure 27: Sorption Isotherms as a function of the Average Relative Humidity (%)

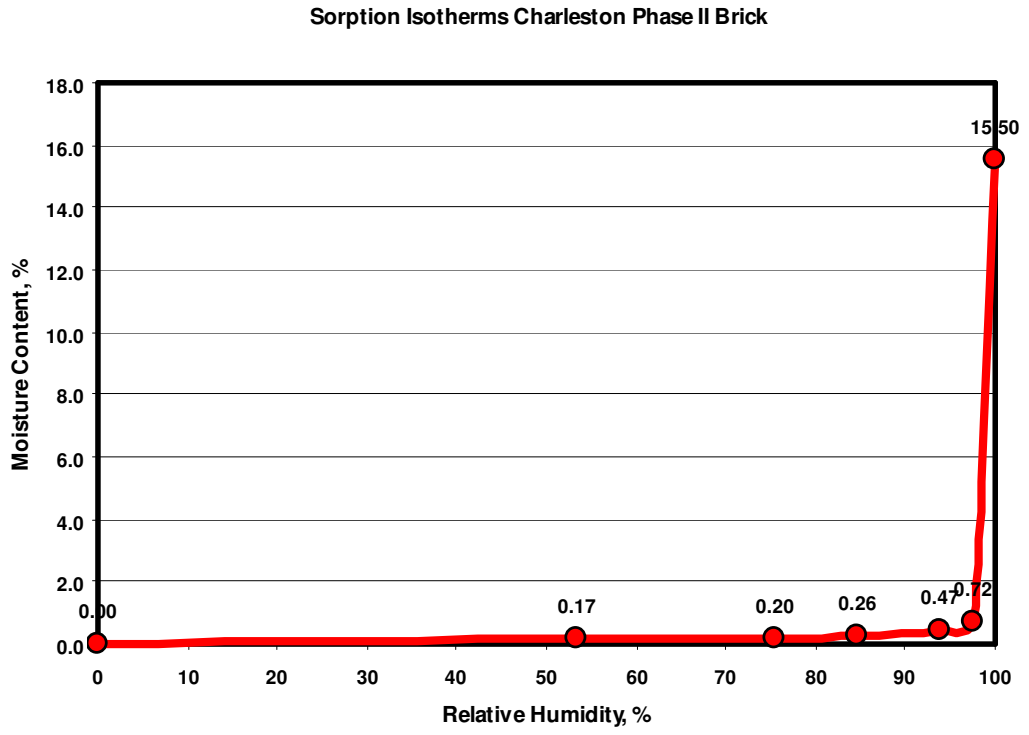

Figure 28: Sorption Isotherms as a function of the Average Relative Humidity (%)

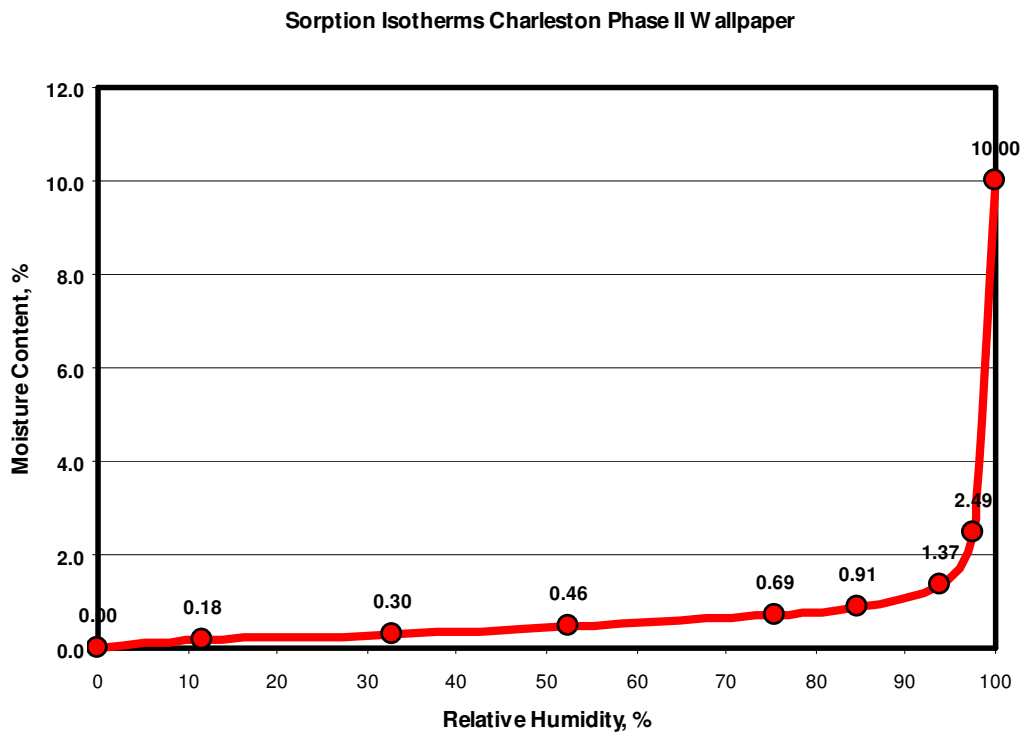

Figure 29: Sorption Isotherms as a function of the Average Relative Humidity (%)

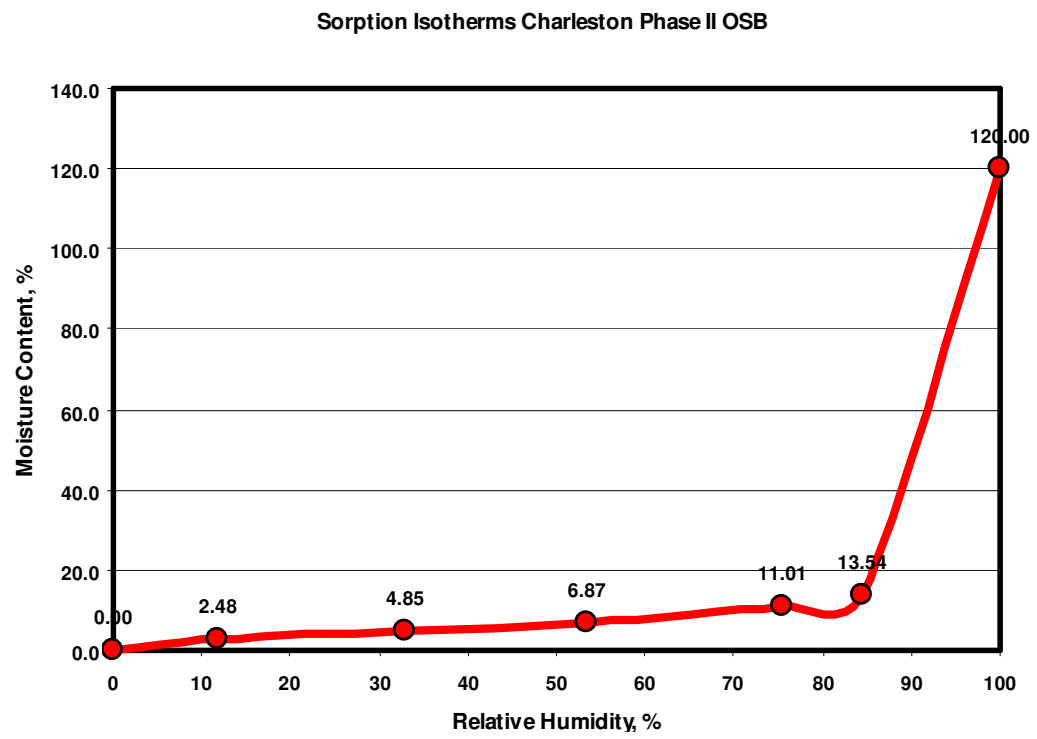

Figure 30: Sorption Isotherms as a function of the Average Relative Humidity (%)

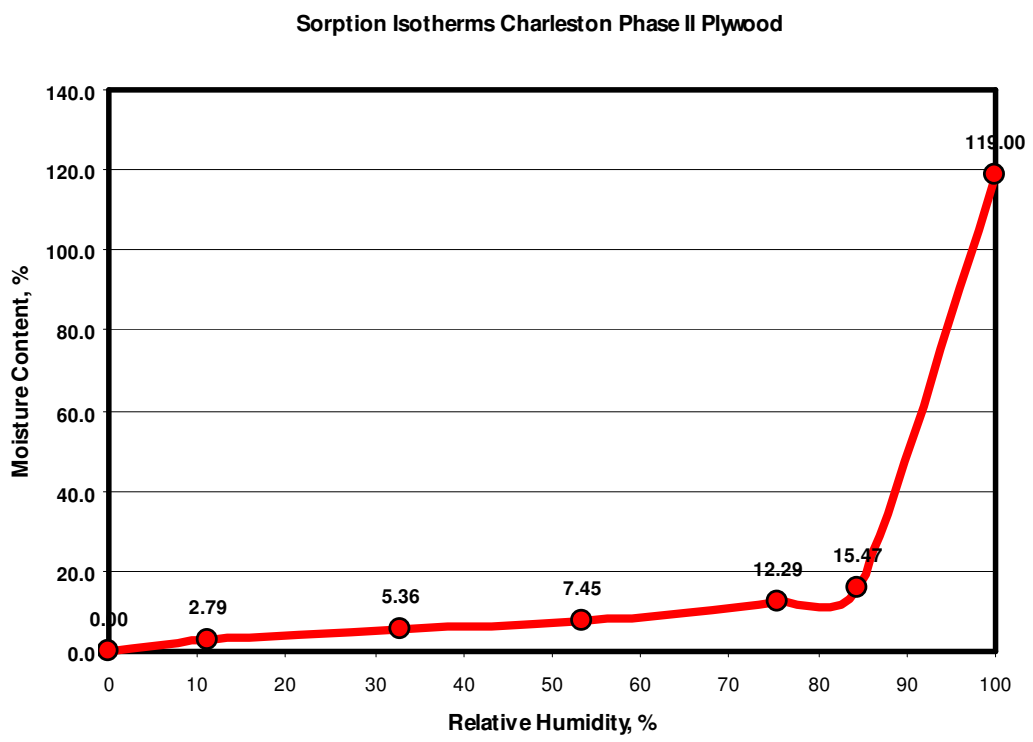

Figure 31: Sorption Isotherms as a function of the Average Relative Humidity (%)

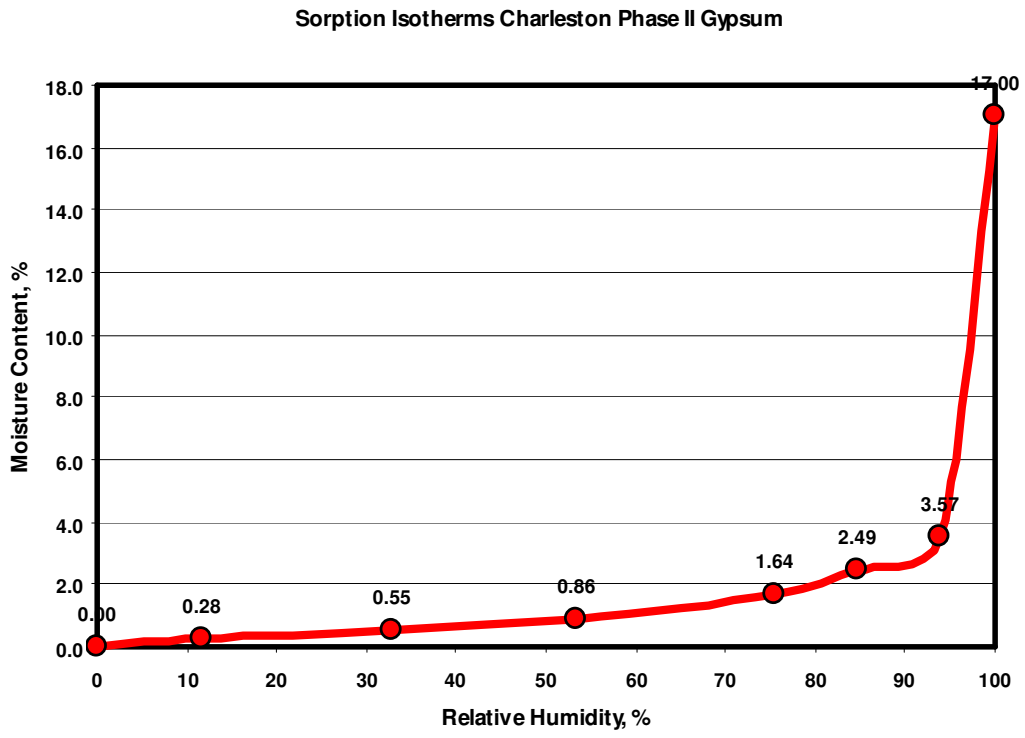

Figure 32: Sorption Isotherms as a function of the Average Relative Humidity (%)

In table 9, the tabular form of the sorption isotherms are shown.

Table 9: Sorption Isotherms

RH, %	OSB	Plywood	2x4 Framing	Jumbo Tex
0.0	0	0	0	0.0
11.3	2.13	2.42	2.48	1.9
32.9	4.64	5.28	5.53	3.7
53.5	6.88	7.84	8.57	5.3
75.4	10.61	11.80	12.67	8.1
84.6	13.57	15.43	15.62	10.1
94.0	17.92	20.05		13.9
97.4				19.1

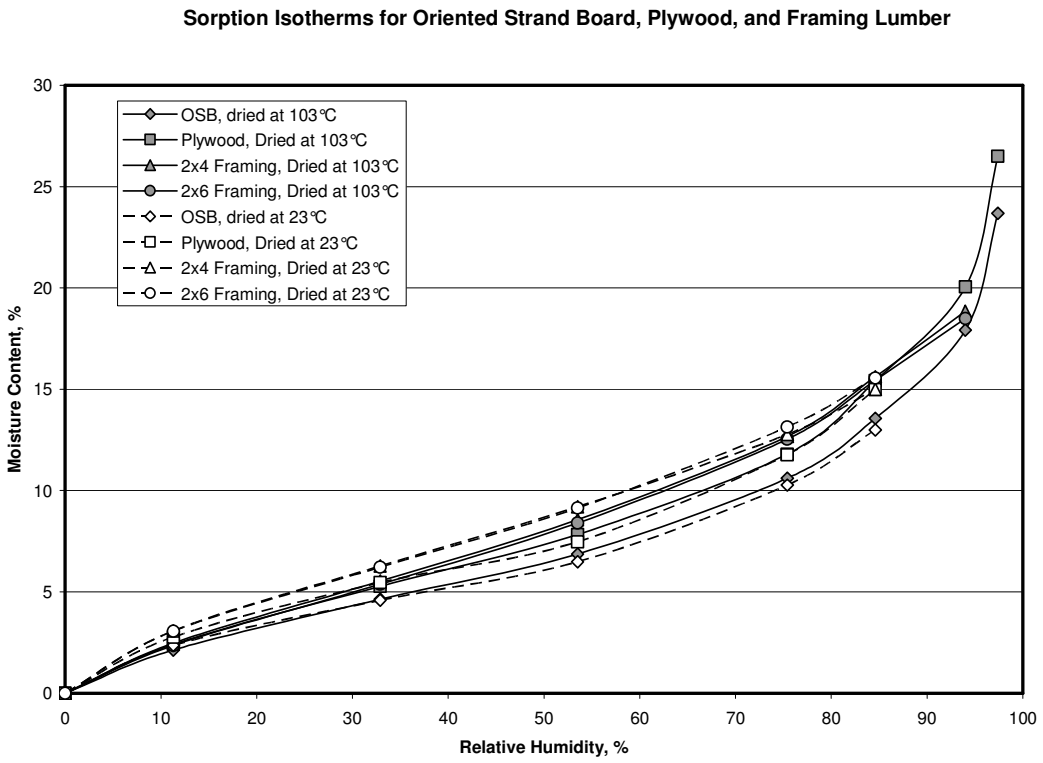

Figure 33: Sorption Isotherms as a function of the Average Relative Humidity (%)

Liquid Diffusivity

In Figures 34 to 35 the liquid absorptivity values were used to calculate the liquid diffusivity as a function of moisture content (kg/kg). The results show both the suction and redistribution curves.

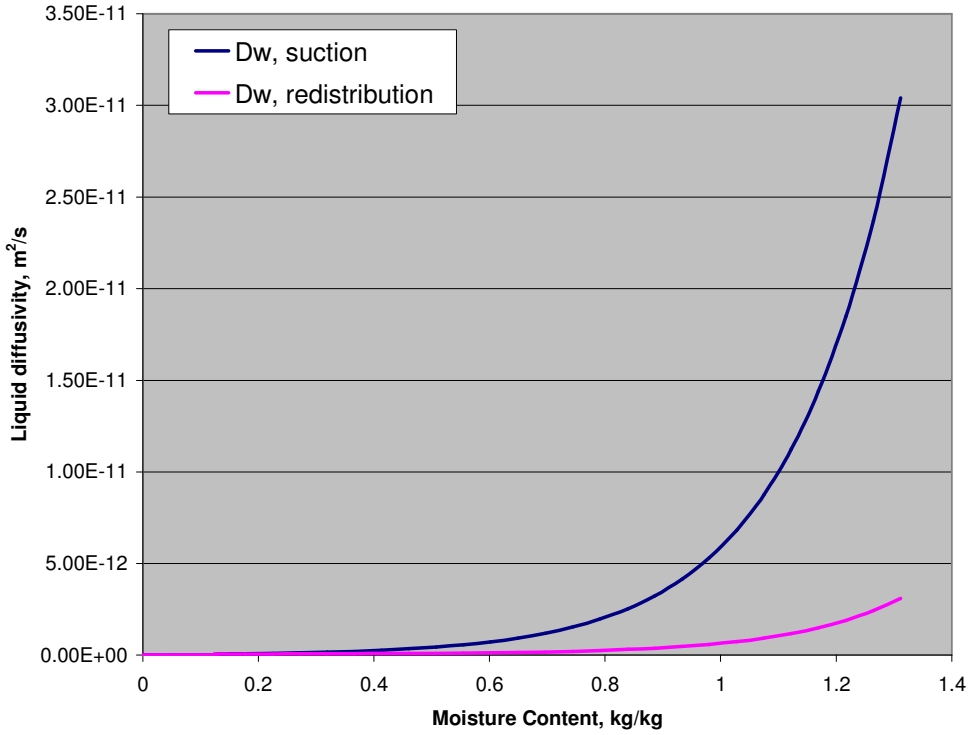

Figure 34: OSB Liquid Diffusivity as a function of moisture content

Conclusions

Materials were collected by Mr Barry Hardman of NBSC (National Building Science Corp.) during the construction phase of the wall systems and sent to ORNL to perform a hygrothermal material property characterization. These materials were then conditioned to the various hygrothermal loads and the hygric capacities, and the transport coefficients in both the hygroscopic and capillary regimes were measured.

Available results by Oct. 15 2007 and the methodology employed during the characterization have been presented. In this activity, ORNL has characterized additional properties (and in a more elaborate approach) than required by the ORNL/EIMA/DOE contract. Some of the

properties specifically the brick, stucco, and the wooden material experience very long times to establish equilibrium moisture conditions.

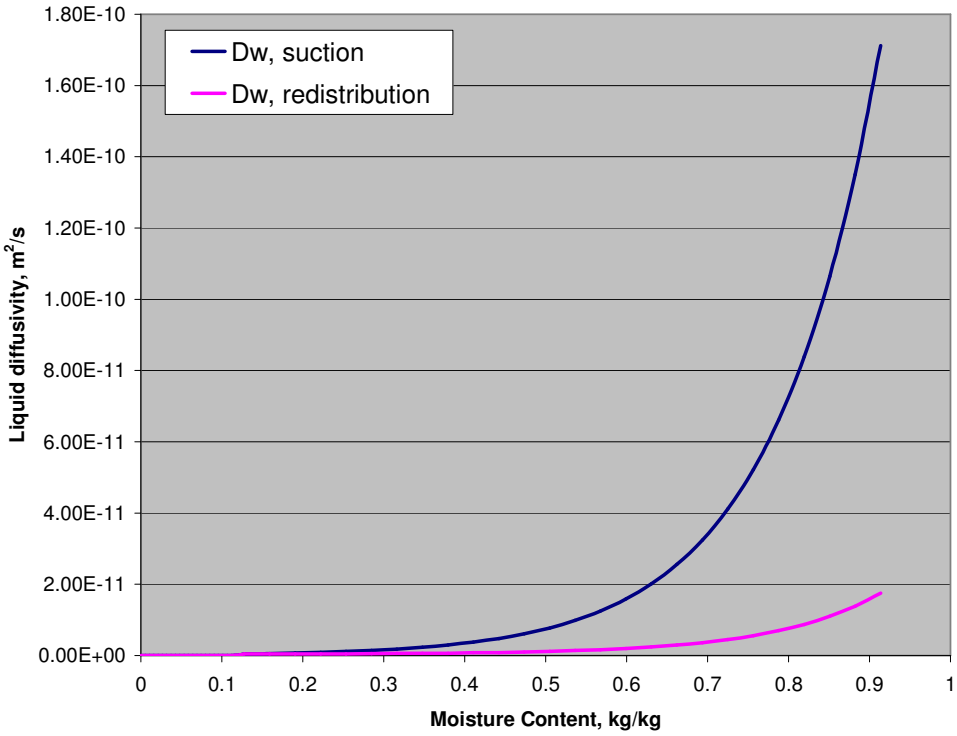

Figure 35: Plywood Liquid Diffusivity as a function of moisture content

Some of the results presented in this report are not currently available in the open literature. It is expected that these will be delivered to the WUFI-ORNL software version 5. Inclusion of these material properties will permit users a wider range of hygrothermal analysis capabilities.

RESULTS: MEASURED DATA

Heat Flux data

In this section the thermal performance of the wall systems that incorporated a heat flux sensor will be discussed. It should be noted that while the heat flux sensor was placed in the exact same location for all wall systems, the comparison conducted is only valid in terms of their relative performance. This is due to the effect of the impact of the specific orientation of the building on the incident solar fluxes, the specific location of the wall, the possible solar shading and the impact of wind driven rain loading that is unique to each wall tested. This creates some uncertainty as the exact loading is not possible on the field, however these effects should be within the experimental uncertainty of the measurements.

It is advised that the values presented in this section should not be used in calculating the energy loading. This is true especially if thermal bridging is present. Thermal bridging short circuits the thermal flow and alters the overall heat flux from the wall. As we have relied on only one heat flux sensor, these should not be used for design applications ORNL has been developing data for design purposes in laboratory controlled conditions for a large number of walls including EIFS.

Hourly Values

As depicted in the instrumentation section, Table 3 indicates which of the NET walls incorporated the heat flux sensors. As a limited number of sensors were available, sensors were located strategically to the project walls to demonstrate the importance of the imbedded energy efficiency of exterior insulated wall systems.

The heat fluxes were measured on an hourly basis. These heat fluxes were processed by splitting them into positive and negative heat fluxes. Positive heat fluxes were designated as heat fluxes that provided a net positive heat flow during the specific hour into the NET building through the wall segment. A negative heat flux is designated as the heat flux that leaves the building. In Figures 36 to 45 the hourly heat fluxes are shown as a function of time of day at different times of the year. In Figures 36 to 40 the hourly heat fluxes for walls 3, 5,

10 and 15 are shown for June 25,2006, August 15 2006, November 15 2006, February 15 2007, and May 15 2007. In a similar fashion Figures 41 to 45 show the hourly heat fluxes for walls 3, 14, 17 and 26 are shown for June 25,2006, August 15 2006, November 15 2006, February 15 2007, and May 15 2007. Walls 3, 5 10 and 15 are all located on the South East side of the building, while Walls 17 and 26 are walls that are located on the North west side of the building. In both sets of graphs, wall 3 was displayed to allow easy comparison between these walls. Walls 14 and 15 show the highest losses in heat fluxes during the positive heat flux period of the year. In Charleston, SC this happens to be the largest period of the year. To convert these graphs into IP, 3.5 W/m^2 is approximately 1.11 Btu/ft^2 h, 6 W/m^2 is 1.91 Btu/ft^2 hr, 8 W/m^2 is 2.536 Btu/ft^2 hr, and 10 W/m^2 is 3.17 Btu/ft^2 hr.

From the measured heat fluxes, the beneficial thermal performance of the exterior foam insulation becomes evident for walls, facing both the south-east and north-west orientations during the cooling season. Reductions of not only the total heat flows, but also substantial peak reduction was found. This can also be a significant cost savings and can be beneficial to utilities for energy management.

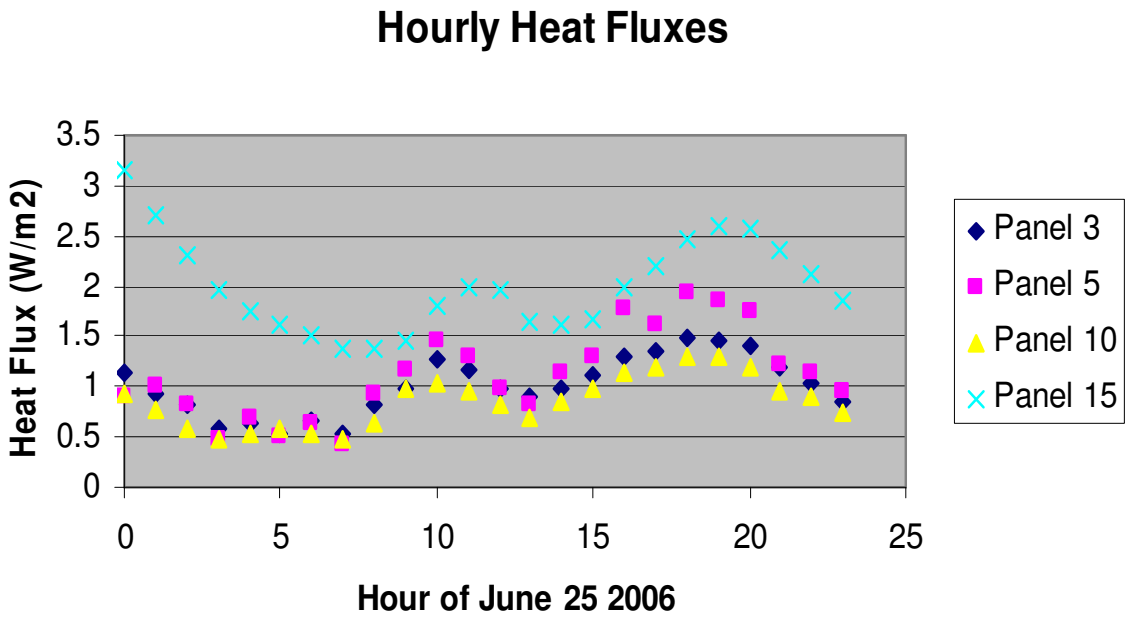

Figure 36: Hourly Heat Fluxes for June 25, 2006 for Panel 3, 5, 10 and 15
(3.5 W/m2 is approximately 1.11 Btu/ft2 hr)

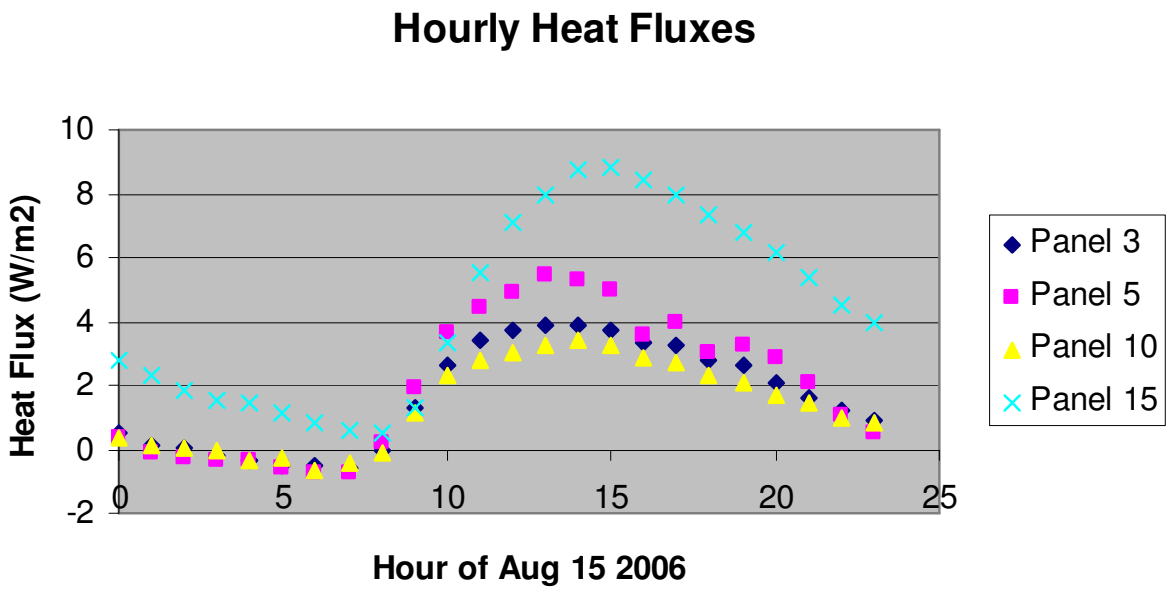

Figure 37: Hourly Heat Fluxes for August 15, 2006 for Panel 3, 5, 10 and 15
(10 W/m2 is 3.17 Btu/ft2hr)

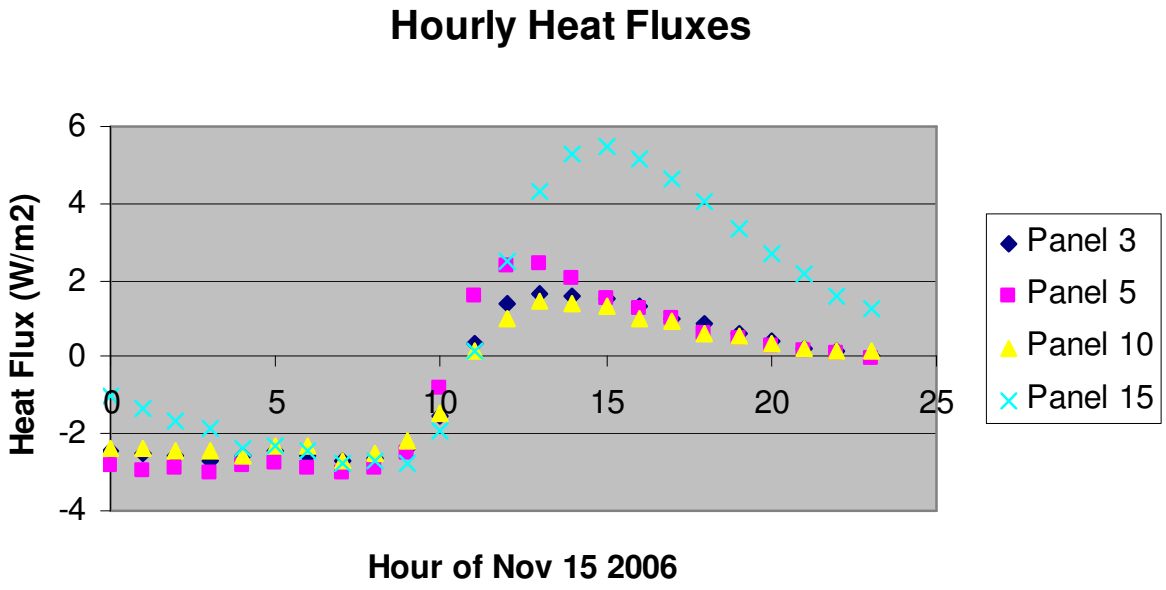

Figure 38: Hourly Heat Fluxes for November 15, 2006 for Panel 3, 5, 10 and 15
(6 W/m2 is 1.91 Btu/ft2 hr)

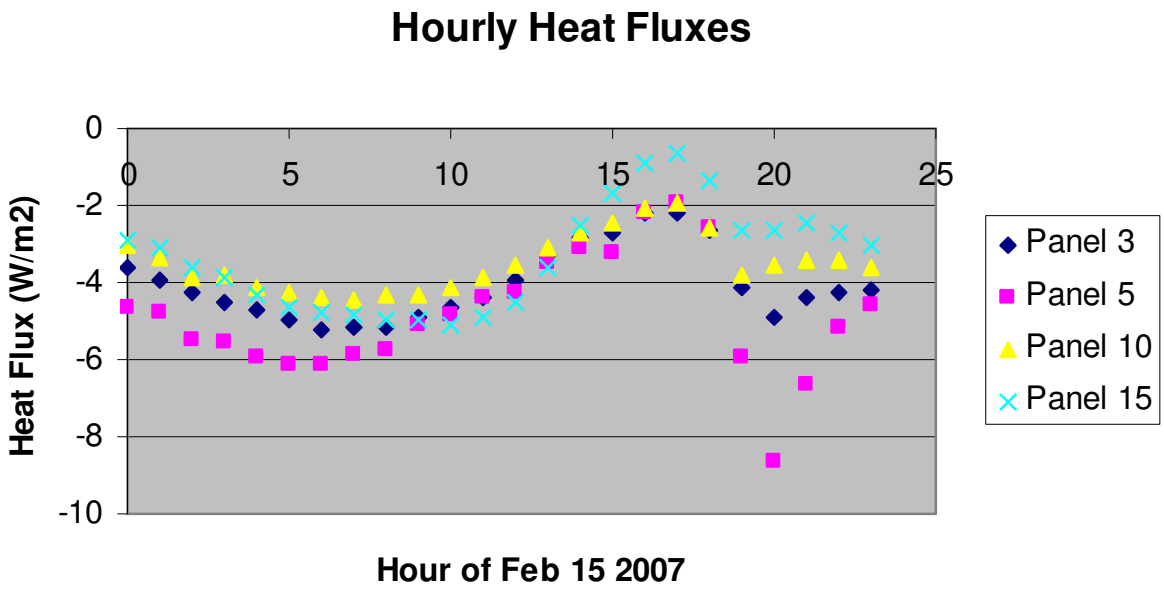

Figure 39: Hourly Heat Fluxes for Feb 15, 2007 for Panel 3, 5, 10 and 15
(-10 W/m2 is -3.17 Btu/ft2hr)

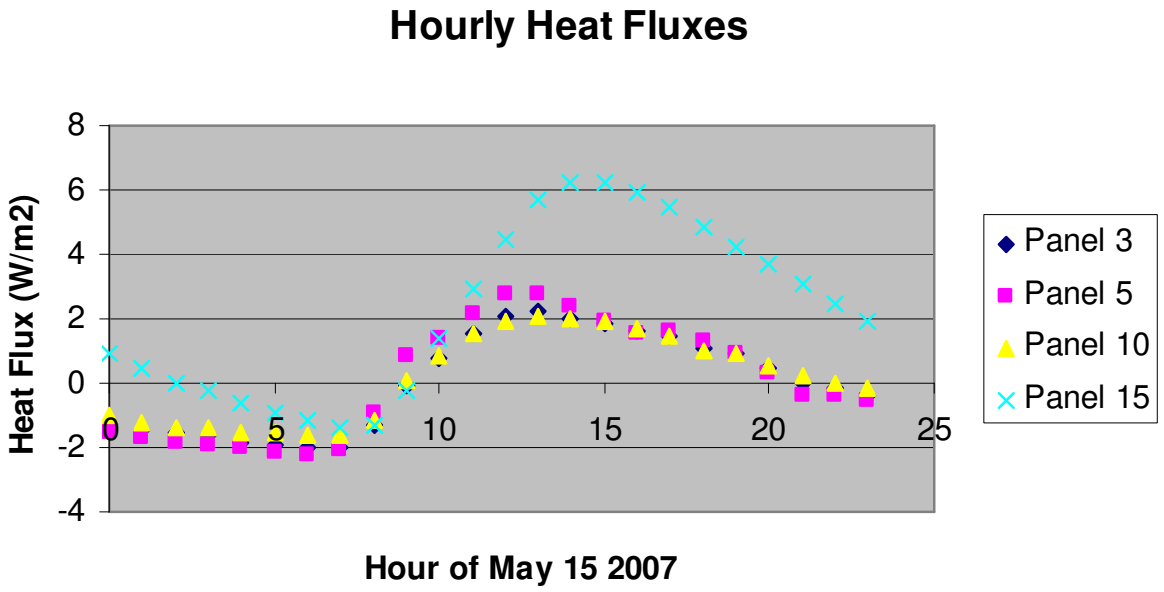

Figure 40: Hourly Heat Fluxes for May 15, 2007 for Panel 3, 5, 10 and 15
(8 W/m2 is 2.536 Btu/ft2 hr)

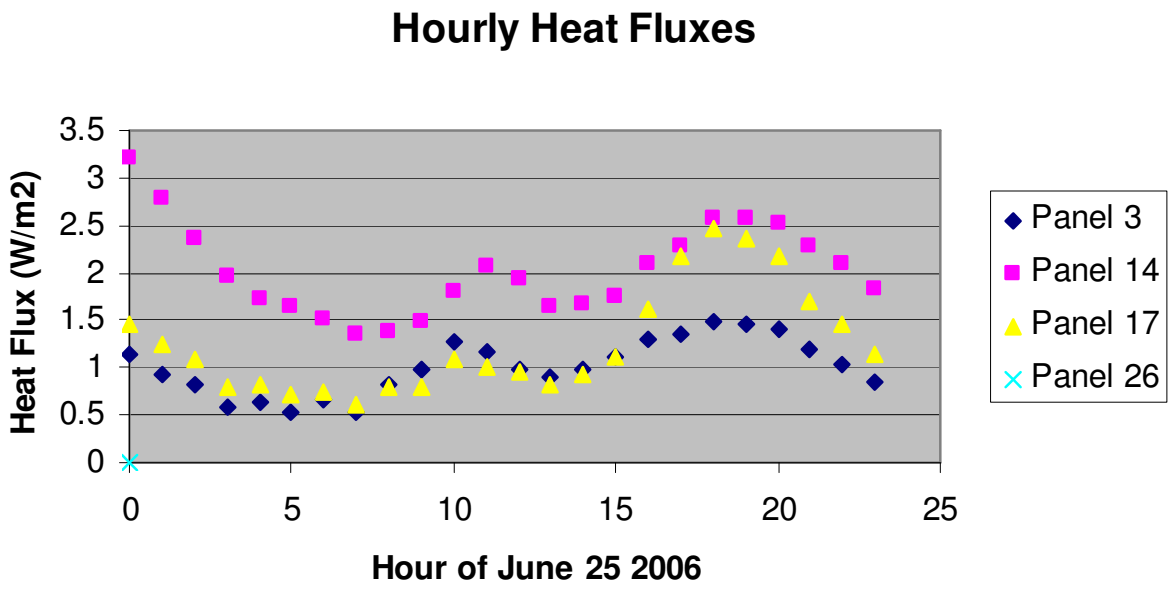

Figure 41: Hourly Heat Fluxes for June 25, 2006 for Panel 3, 14, 17 and 26
(3.5 W/m2 is approximately 1.11 Btu/ft2 hr)

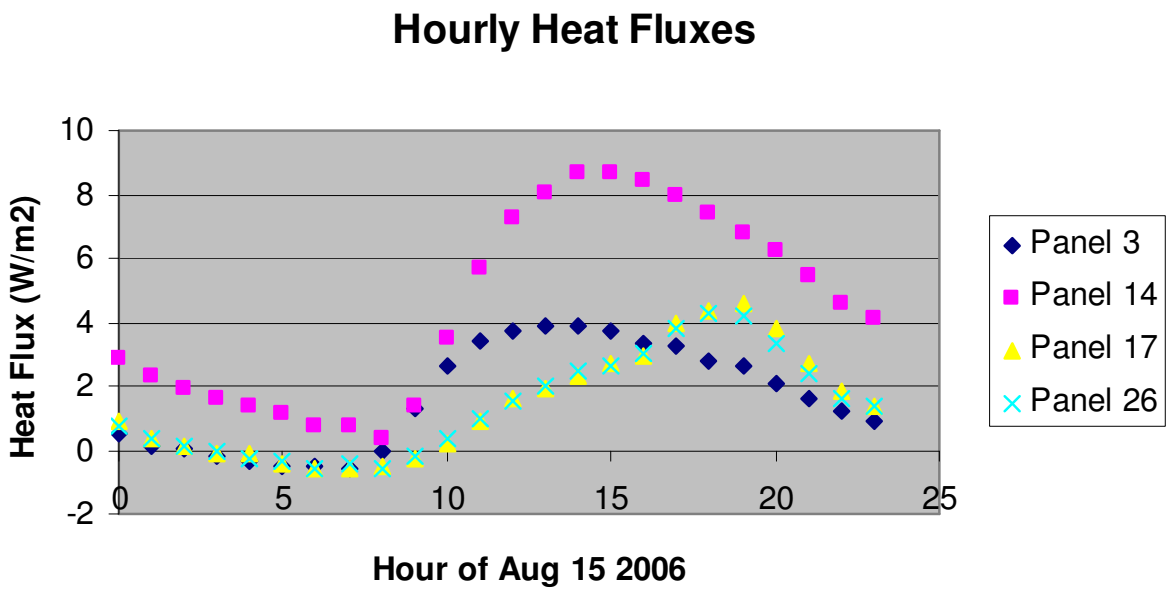

Figure 42: Hourly Heat Fluxes for August 15, 2006 for Panel 3, 14, 17 and 26
(10 W/m2 is 3.17 Btu/ft2hr)

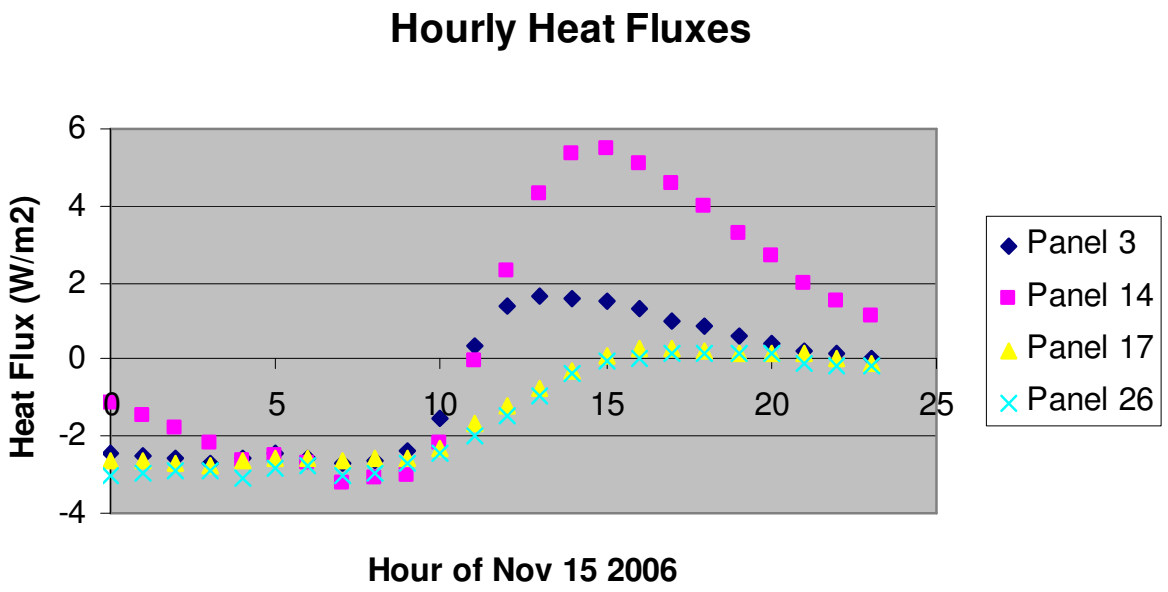

Figure 43: Hourly Heat Fluxes for November 15, 2006 for Panel 3, 14, 17 and 26
(6 W/m2 is 1.91 Btu/ft2 hr)

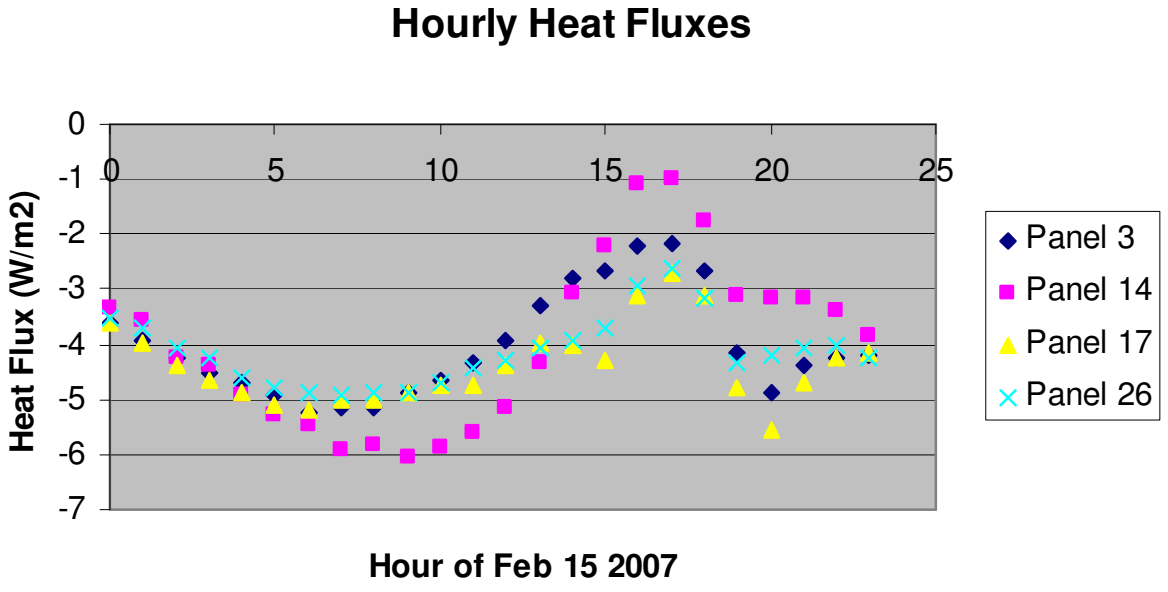

Figure 44: Hourly Heat Fluxes for November 15, 2006 for Panel 3, 14, 17 and 26
(-7 W/m2 is 2.219 Btu/ft2 hr)

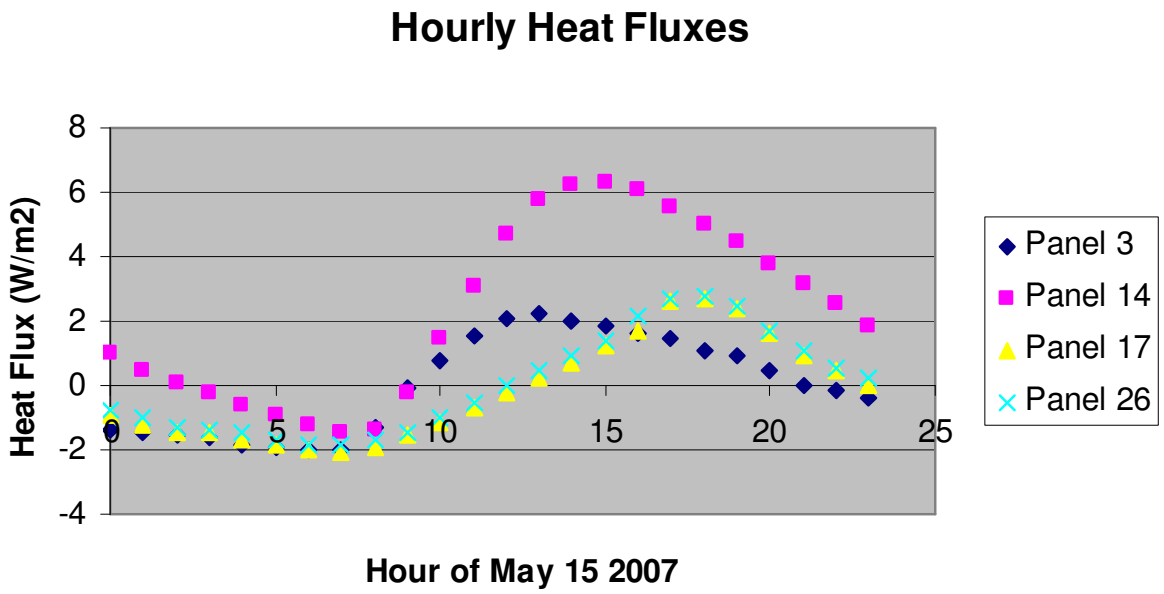

Figure 45: Hourly Heat Fluxes for November 15, 2006 for Panel 3, 14, 17 and 26
(8 W/m2 is 2.536 Btu/ft2 hr)

In Table 10 the hourly heat flux data were processed to yield total averaged heat flux, averaged positive heat fluxes, and negative heat fluxes for the period spanning between June 2006 and July 2007

Figures 46 and 47 display the averaged positive and negative heat fluxes during the period spanning between May 2006 and June 2007.

Table 10: Total, Positive and Negative Heat Fluxes for the testing period.

Wall Description Attachment Drainage/ Air Space	**Weather Barrier**	**Framing**	**Total Averaged Heat Flux (W/m2)**	**Average Positive Heat Flux (W/m2)**	**Average Negative Heat Flux (W/m2)**
EIFS #2 (**Panel 3**) (SE), With Flaw and 1 ½" Flat EPS, Notched Trowel, Vertical, Ribbons, Plywood Sheathing, No VB	Liquid	2 x 4@16"	-0.125	0.818	-0.939
EIFS #4 (**Panel 5**) (SE), 4" Flat EPS, Notched Trowel, Vertical Ribbons, Plywood Sheathing, No VB	Liquid	2 x 4@16"	-0.074	1.005	-1.074
EIFS #5 (**Panel 6**) (SE),1 ½" Flat EPS, Notched Trowel, Vertical Ribbons, Plywood Sheathing, No VB	Liquid	2 x 4 @16"	-0.120	0.792	-0.907
EIFS #6 (**Panel 7**) (SE), With Flaw with 1 ½" EPS, Notched Trowel, Vertical Ribbons, Plywood Sheathing, 6-mil Poly	Liquid	2 x 4@16"	-0.110	0.802	-0.912
EIFS #7 (**Panel 9**) (SE), 1 ½" Flat EPS, Mech. Fastened, Mat, OSB Sheathing, No VB	House Wrap	2 x 4@16"	-0.123	0.952	-1.068
EIFS #8 (**Panel 10**) (SE), Ventilated 1 ½" Flat, Adhesive, Lath, Plywood Sheathing, No VB	Liquid	2 x 4@16"	-0.105	0.714 (**1st**)	-0.815
3 Coat #9 Portland Cement Plaster (**Panel 12**) (SE), Mech., Fastened 3.4 Metal Lath, OSB Sheathing, No VB	2-Layers Grade D 60 Minute	2 x 4@16"	-0.084	1.272	-1.347
Brick #10 (**Panel 14**) (SE), NA, Air Cavity 1", OSB Sheathing, No VB	1-Layer Grade D	2 x 4@16"	1.586	2.317	-0.719
Brick #11 (**Panel 15**) (SE), With Flaw, Air Cavity 1", OSB Sheathing, No VB	1-Layer Grade D	2 x 4@16"	1.701	2.329	-0.618 (**1st**)
EIFS #13 (**Panel 17**)(NW), 1 ½" Flat EPS, Notched ,Trowel Vertical Ribbons, Plywood Sheathing, No VB	Liquid	2 x 4@16"	-0.370	0.725	-1.095
EIFS #14 (**Panel 18**)(NW), With Flaw, 1 ½" Flat EPS, Notched, Trowel Vertical, Ribbons, Plywood Sheathing, No VB	Liquid	2 x 4@16"	0.423	1.245	-0.822
EIFS #15 (**Panel 26**)(NW), Ventilated, 1 ½" Flat EPS, Adhesive Lath, Plywood Sheathing, No VB	Liquid	2 x 4@16"	-0.360	0.715	-1.075

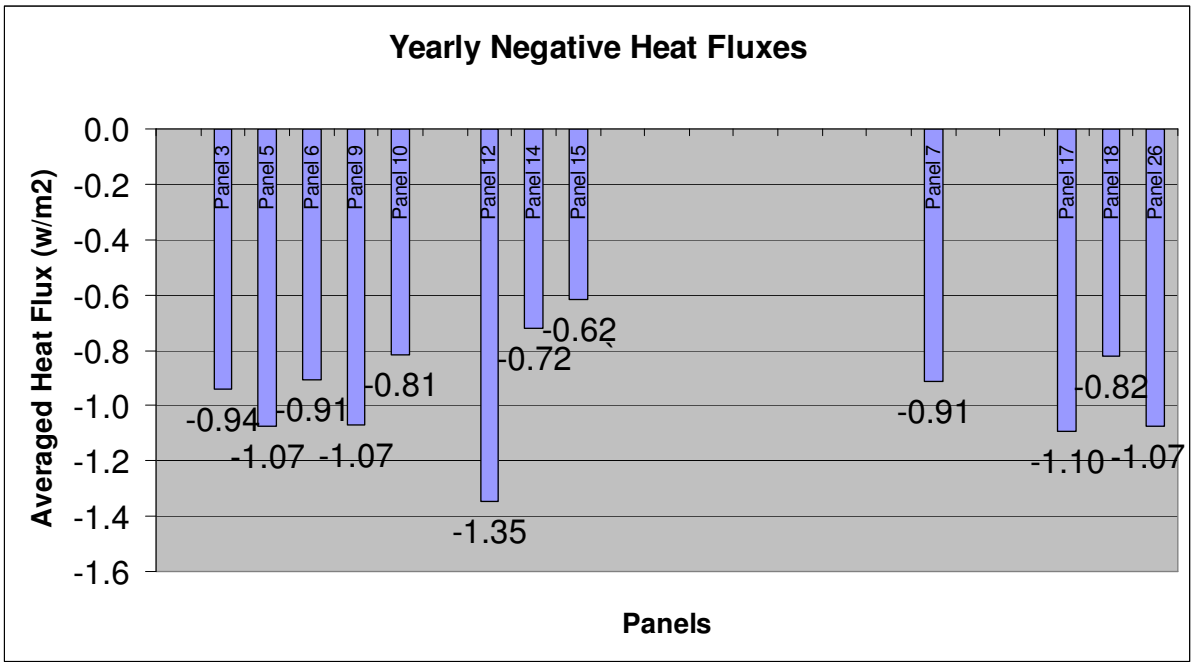

Figure 46: Hourly Averaged Negative Heat Fluxes for each Wall May 2006 – June 2007

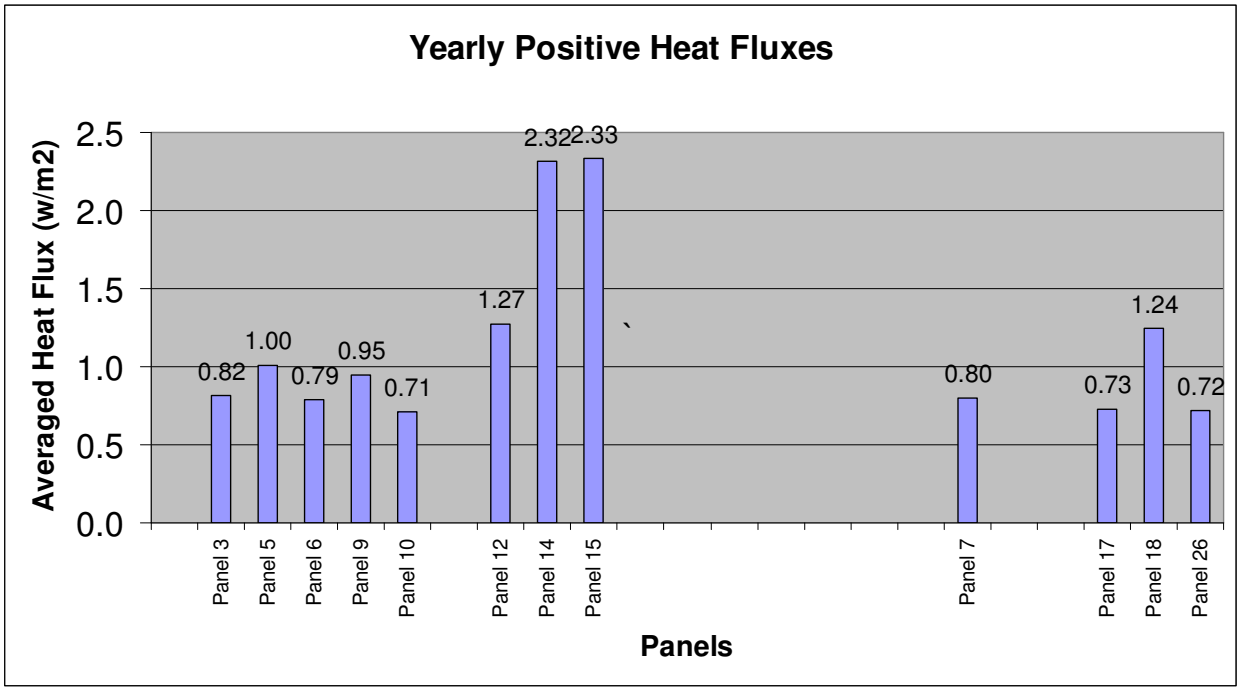

Figure 47: Hourly Averaged Positive Heat Fluxes for each Wall May 2006 – June 2007

In Figure 48, the monthly averaged positive heat flux is shown for panels 3, 9, 10 and 15 for the period between May of 2006 and June 2007. From this graph, the monthly average heat fluxes show the high average positive heat fluxes present in the masonry brick wall system (Panel 15). Panel 3 is the new innovative toweled applied water-resistive barrier applied behind the EIF System, Panel 9 is the mechanically fastened EIF System applied over the spun-bonded water-resistive barrier, and Panel 10 is the new innovative toweled applied water-resistive barrier applied behind the EIFS ventilated wall. It is clear from Figure 48 that for the Charleston, SC climate the best performing system (lower positive heat flux) is Panel 10 - the ventilated EIFS wall. The second best is Panel 3, followed by Panel 9 which are both vented systems.

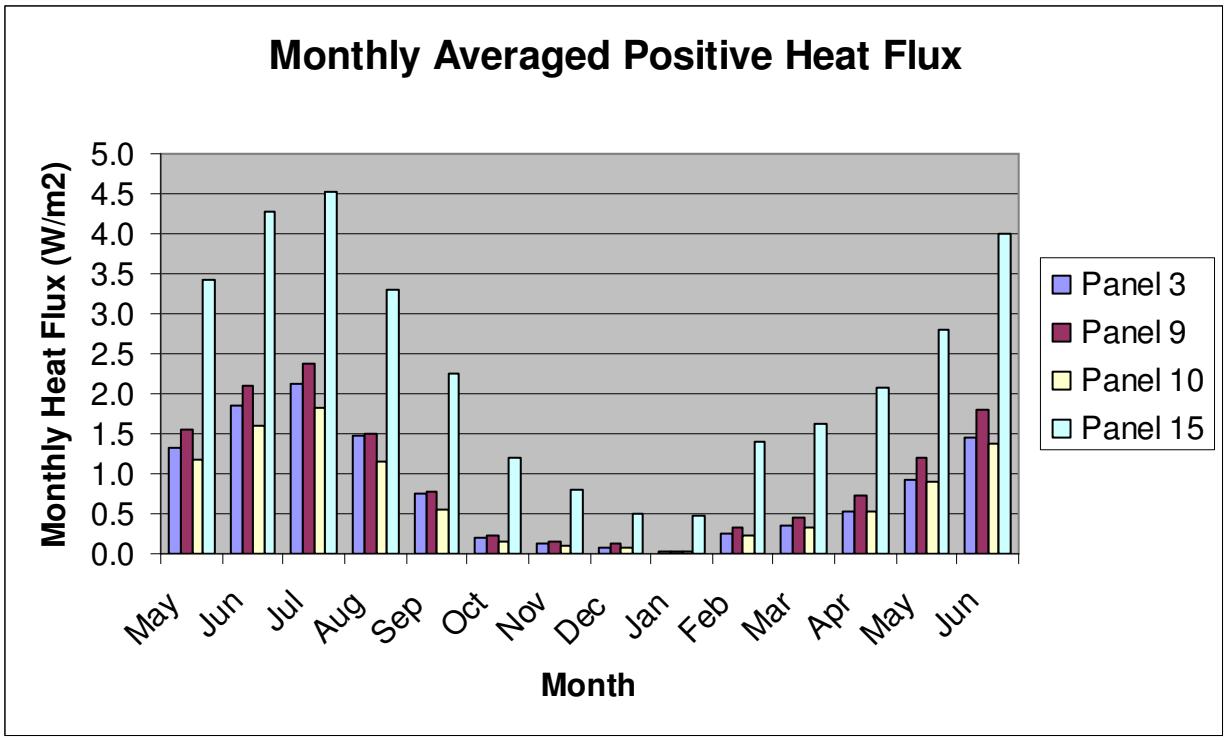

Figure 48: Monthly Averaged Positive Heat Fluxes for each Wall May 2006 – June 2007

In Figure 49 the monthly averaged negative heat fluxes are plotted out for the same Panels: 3, 9, 10 and 15. Here the reverse is shown in terms of the performance of the Panels. The lowest monthly averaged heat fluxes was the brick - Panel 15 which is the best in terms of thermal efficiency during the winter period, followed by Panel 10 - the ventilated EIFS, Panel 3 -(towelled applied water-resistive barrier), and the worst was Panel 9. Thermal mass for Panel 15 has demonstrated the positive impact during the heating season in Charleston, SC.

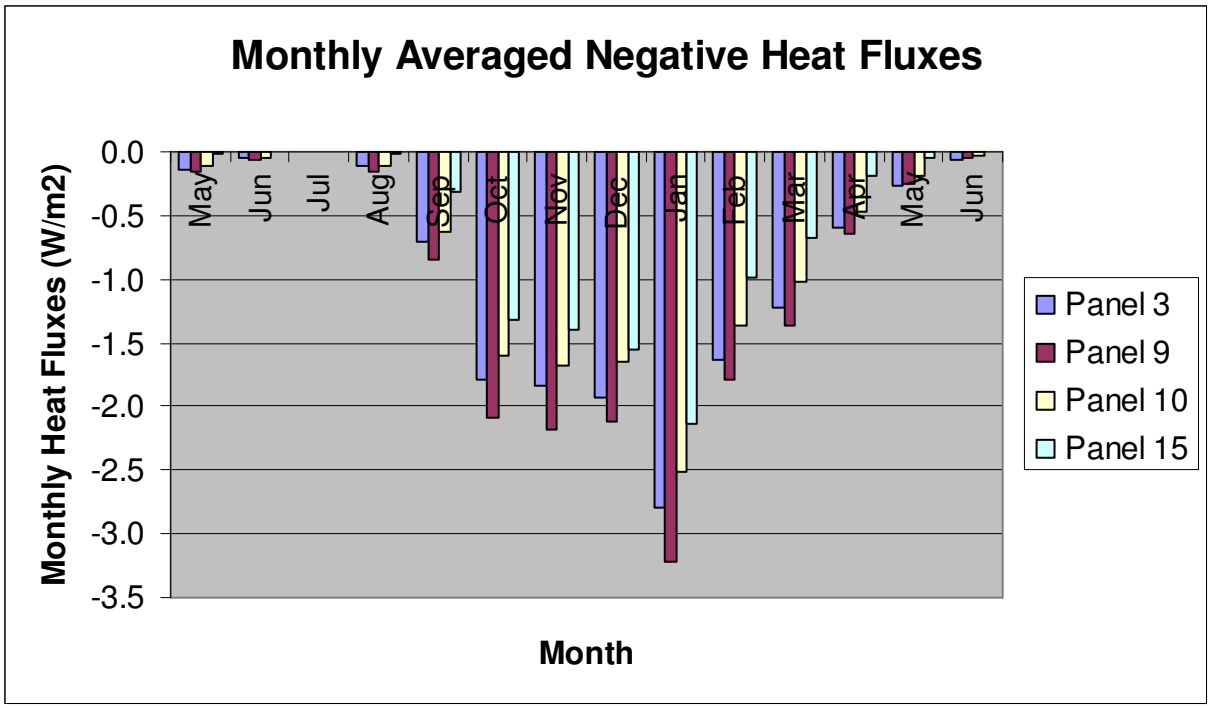

Figure 49: Monthly Averaged Positive Heat Fluxes for each Wall May 2006 – June 2007

Thermal and Moisture Performance of the NET Walls

Table 11, shows the arrangement of the Figures that show results for the temperature, relative humidity and moisture contents for each wall. These Figures show the thermal and moisture performance of each sensor of the wall. The results are plotted out as monthly averages, and in this fashion show the longer term performance of the walls.

Wall #	Wall #	All Temperatures	All Relative Humidities	All Moisture Contents
1	Panel 2	Figure 50	Figure 51	Figure 52
2	Panel 3	Figure 53	Figure 54	Figure 55
3	Panel 4	Figure 56	Figure 57	Figure 58
4	Panel 5	Figure 59	Figure 60	Figure 61
5	Panel 6	Figure 62	Figure 63	Figure 64
6	Panel 7	Figure 65	Figure 66	Figure 67
7	Panel 9	Figure 68	Figure 69	Figure 70
8	Panel 10	Figure 71	Figure 72	Figure 73
9	Panel 12	Figure 74	Figure 75	Figure 76
10	Panel 14	Figure 77	Figure 78	Figure 79
11	Panel 15	Figure 80	Figure 81	Figure 82
12	Panel 16	Figure 83	Figure 84	Figure 85
13	Panel 17	Figure 86	Figure 87	Figure 88
14	Panel 18	Figure 89	Figure 90	Figure 91
15	Panel 26	Figure 92	Figure 93	Figure 94

Observations

A number of key observations have been made during Phase II:

1) All walls performed satisfactory during the Phase II wall testing period.
2) From the results, the highest relative humidities near the exterior sheathing and wood elements appear during the winter months. This is due to the thermal distribution in the wall assemblies.
3) The wall with the driest conditions during the winter period is Panel 5 that is the 4 inch exterior insulation wall.
4) The wall with the highest relative humidity conditions was the stucco wall (Panel 12)
5) The walls with the hygric capacities (Stucco and Brick) show high relative humidities at the insulation/gyspum interface during the summer months.
6) The north orientation induces higher moisture conditions than the south for the EIFS wall by up to 17 % higher moisture relative humidity conditions at the exterior sheathing. The vapor retarder used was a painted wall assembly.
7) The use of polyethylene vapor retarder increases the relative humidity by a maximum of 23 % for the north orientation when compared to the EIFS wall oriented south.

8) EIFS walls with a low vapor permeance interior vapor retarder (6-mil polyethylene vapor retarder) in both south and north orientation show high moisture contents in the exterior sheathing. Low perm vapor retarders are not recommended in hot and humid climates.
9) Ventilating the EIFS wall induces a short-term peak (5 day) higher relative humidity near the exterior sheathing by up to a maximum of 30 % RH during the winter, but allows better drying performances during the winter period (up to 25 % RH).
10) Introducing a flaw (water penetration in the South-east orientation) in the EIFS with Drainage system has a small effect on the sheathing relative humidity (between 2 to 8 % increase in relative humidity).
11) Introducing a flaw (water penetration in the North-west orientation) in the EIFS with Drainage system has a small effect on the sheathing relative humidity (up to 3 % increase in relative humidity).
12) Introducing a flaw (water penetration) in the Brick vented system has a large effect on the sheathing relative humidity (between 15 to 30 % increase in relative humidity).

Panel 2

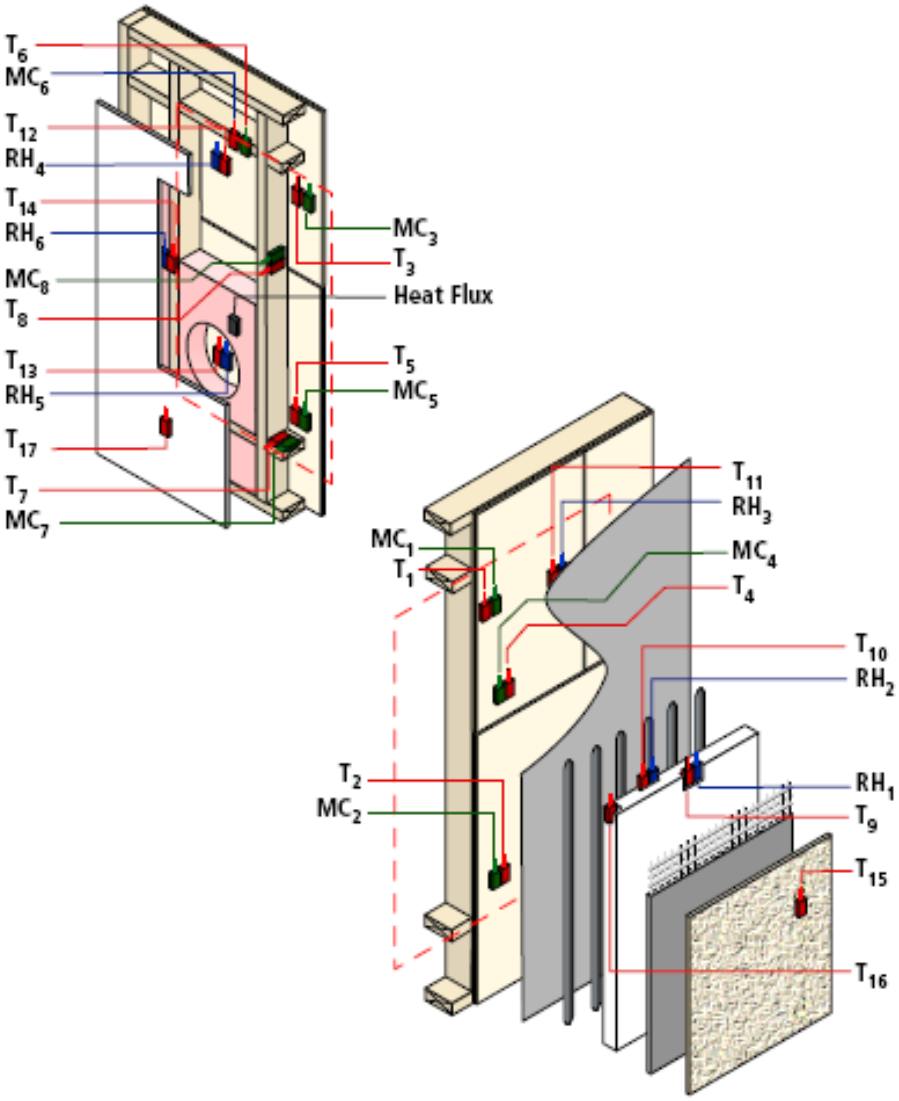
T_6
MC_6
T_{12}
RH_4
T_{14}
RH_6
MC_8
T_8
T_{13}
RH_5
T_{17}
T_7
MC_7
MC_3
T_3
Heat Flux
T_5
MC_5
T_{11}
RH_3
MC_1
T_1
MC_4
T_4
T_{10}
RH_2
T_2
MC_2
RH_1
T_9
T_{15}
T_{16}

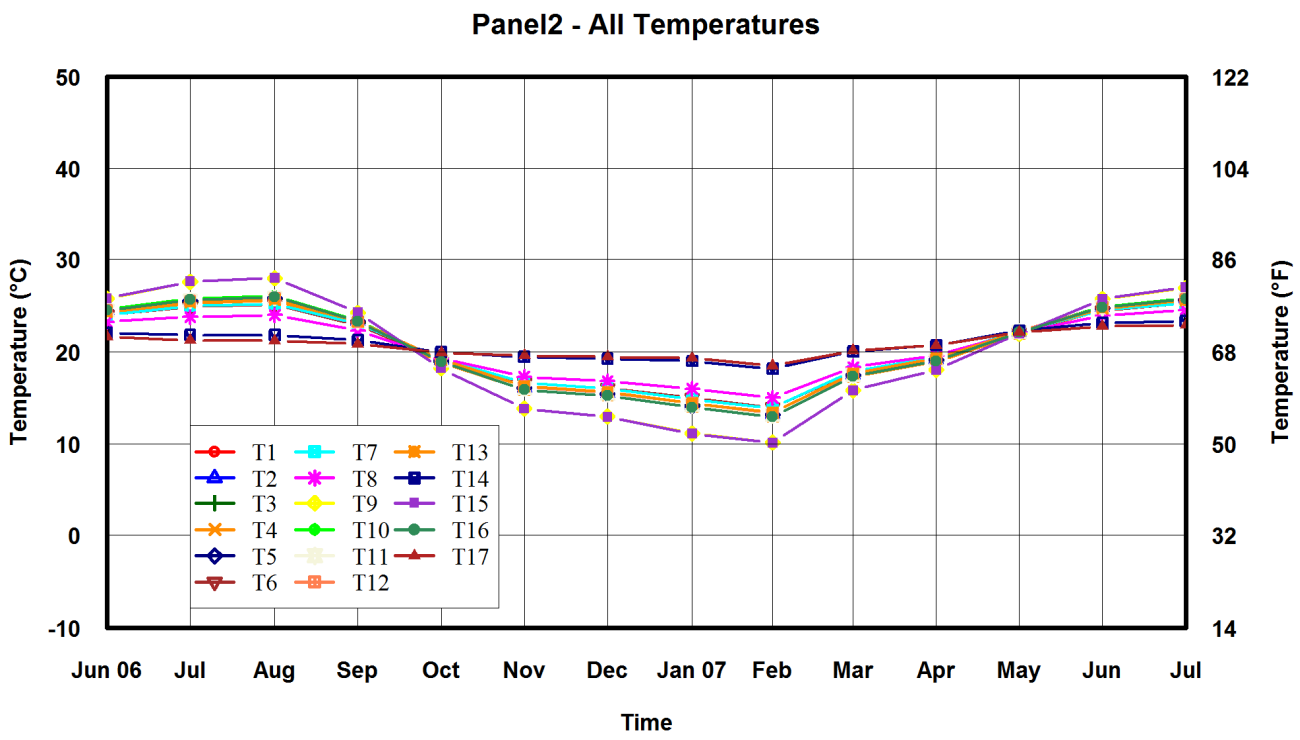

Figure 50: Temperatures in Wall

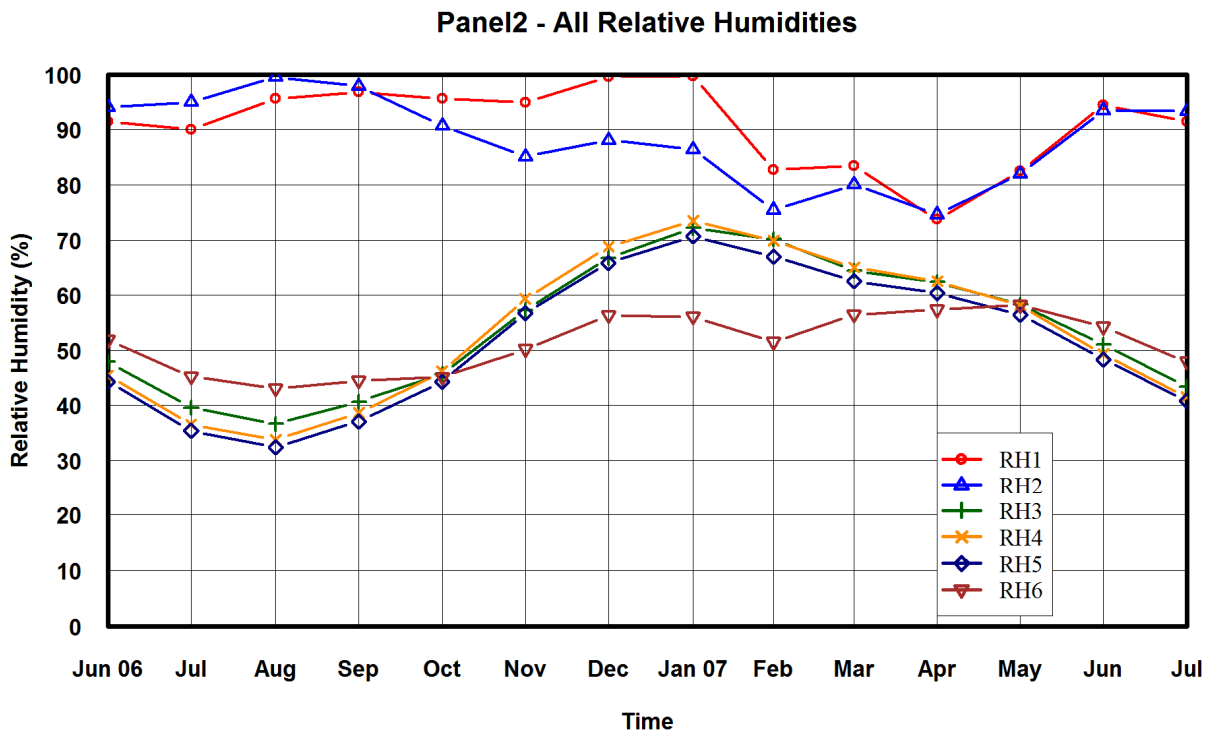

Figure 51: Relative Humidity in Wall

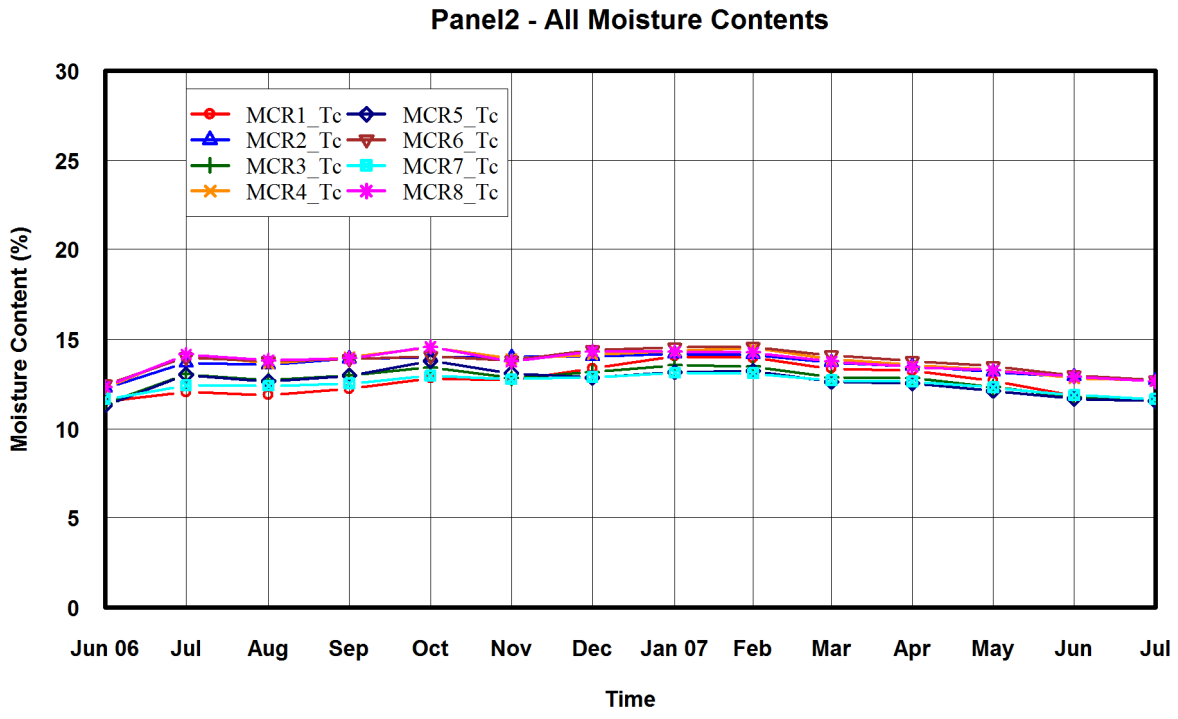

Figure 52: Moisture Content in Wall

Panel 3

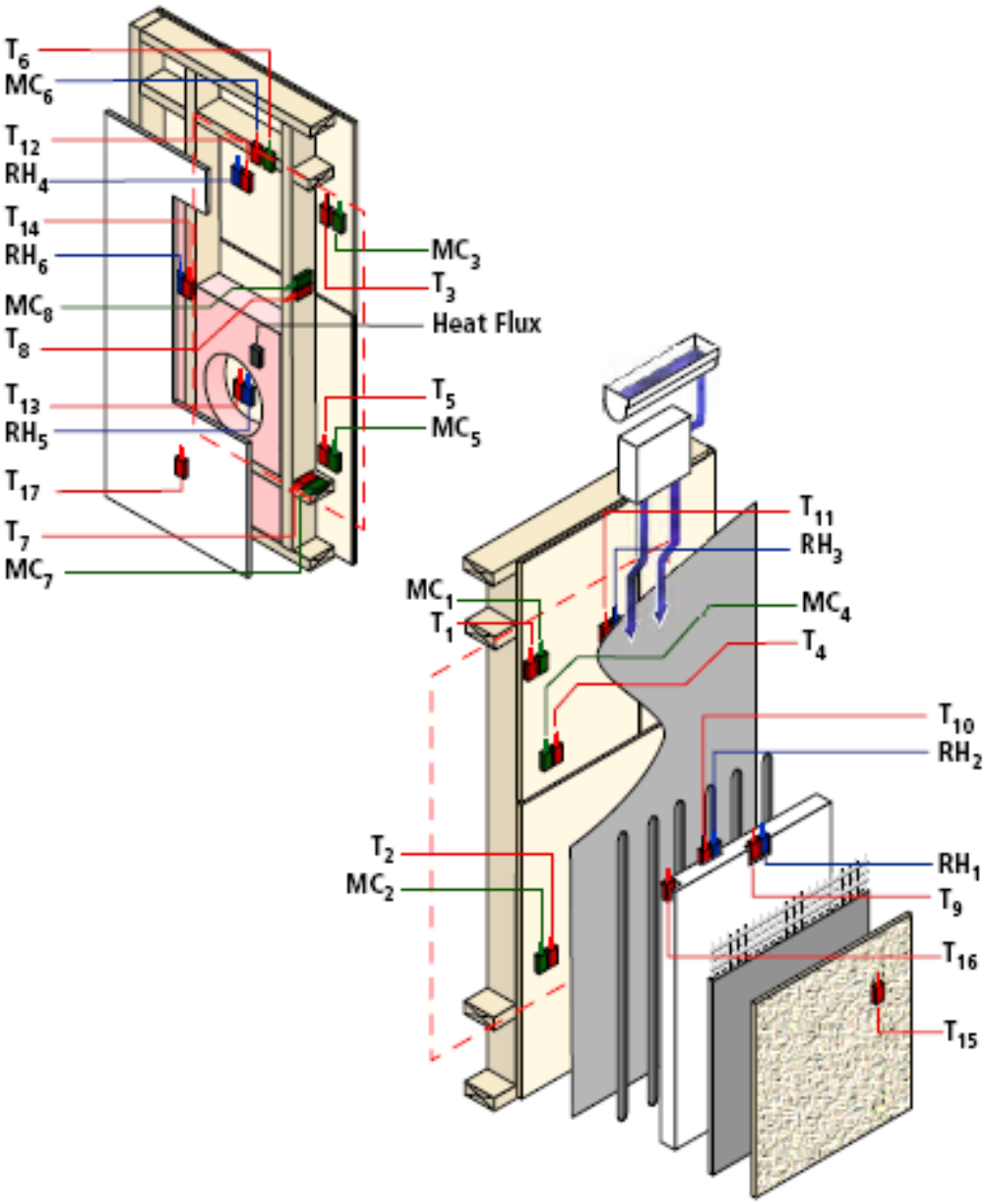
T_6
MC_6
T_{12}
RH_4
T_{14}
RH_6
MC_8
T_8
T_{13}
RH_5
T_{17}
T_7
MC_7
MC_3
T_3
Heat Flux
T_5
MC_5
T_{11}
RH_3
MC_1
T_1
MC_4
T_4
T_{10}
RH_2
T_2
MC_2
RH_1
T_9
T_{16}
T_{15}

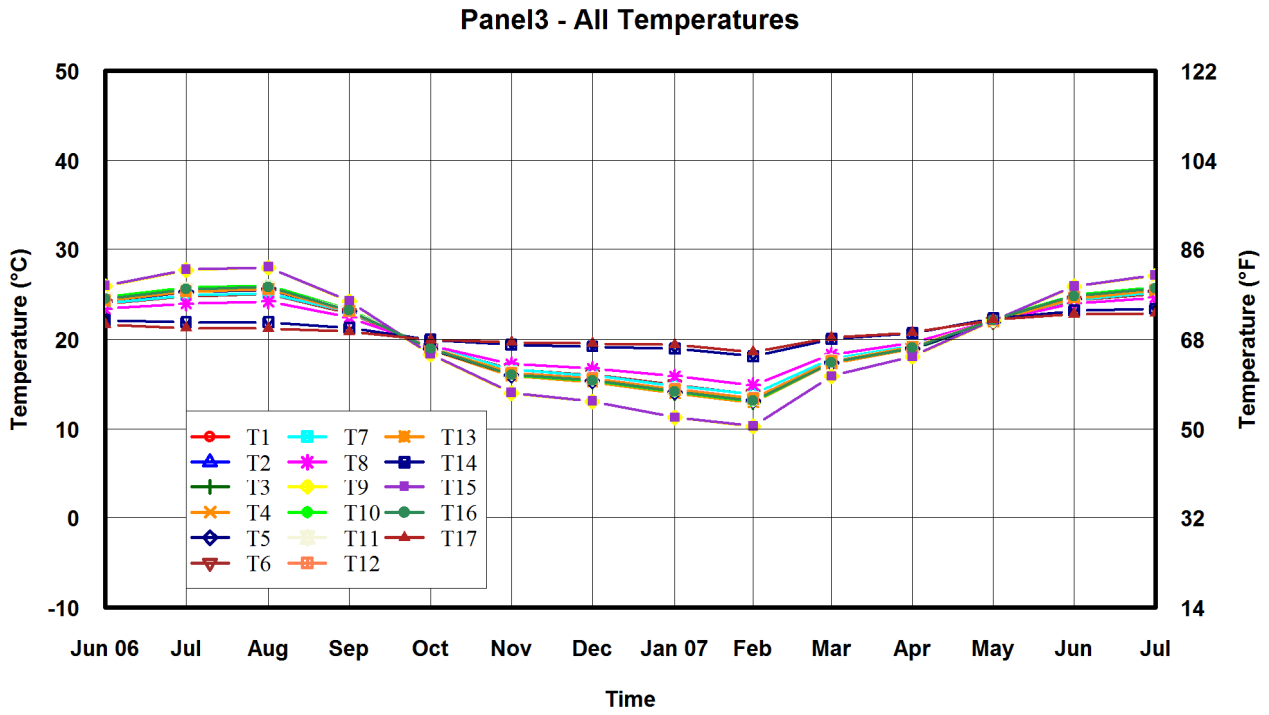

Figure 53: Temperatures in Wall

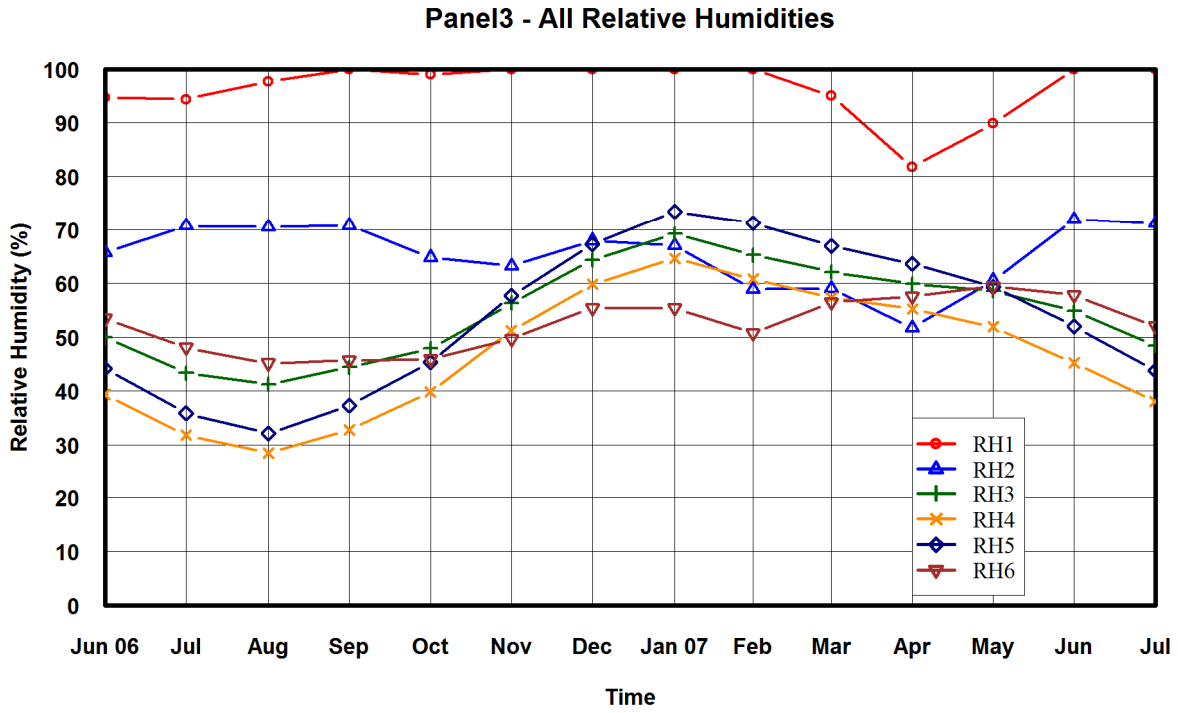

Figure 54: Relative Humidity in Wall

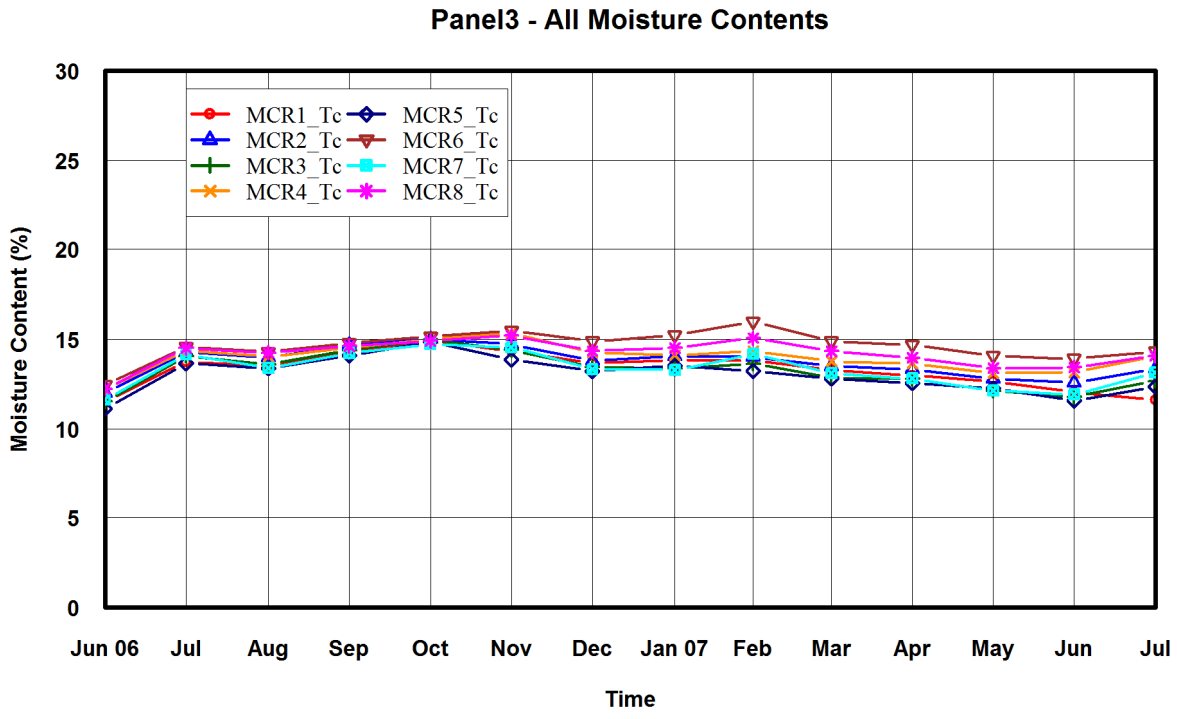

Figure 55: Moisture Content in Wall

Panel 4

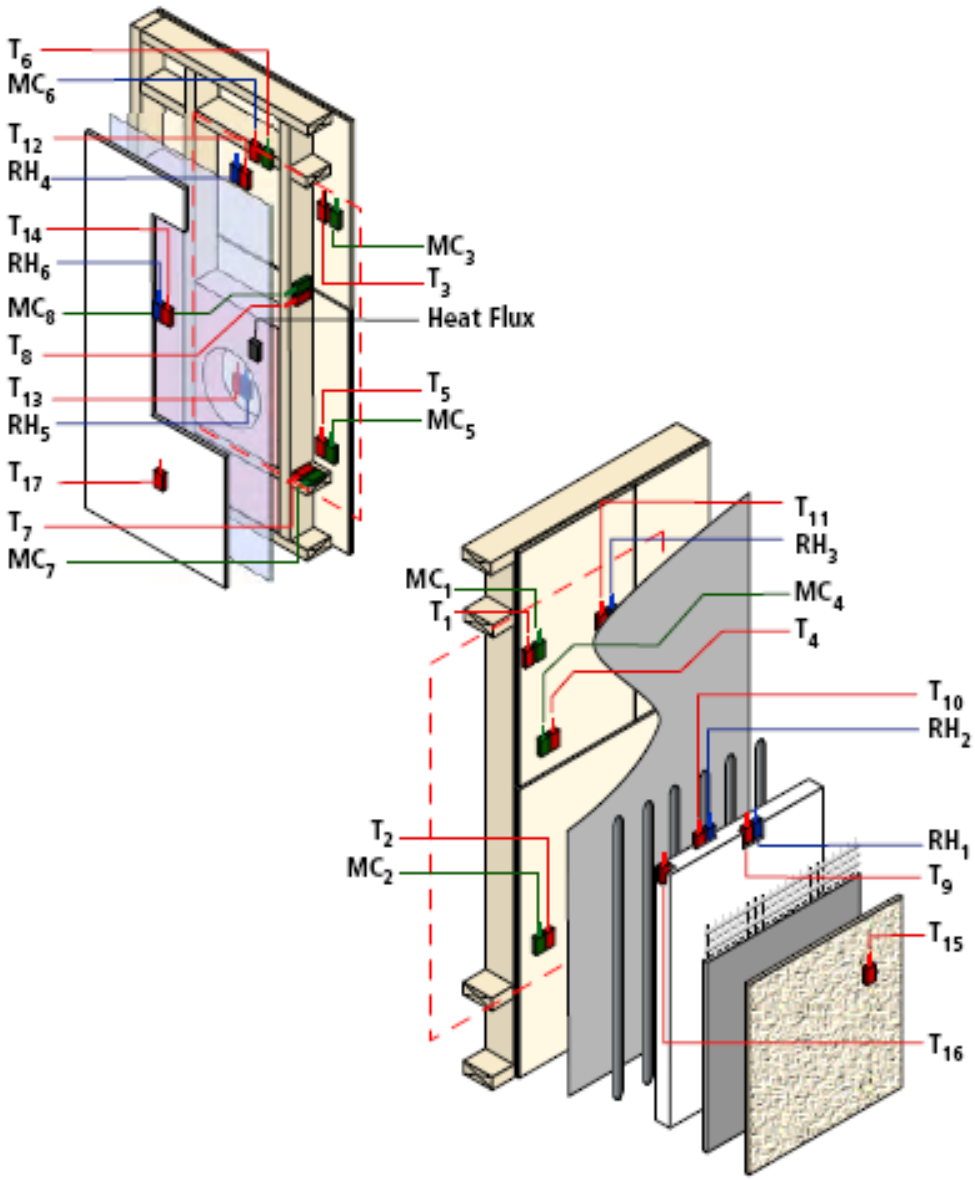
T_6
MC_6
T_{12}
RH_4
T_{14}
RH_6
MC_8
T_8
T_{13}
RH_5
T_{17}
T_7
MC_7
MC_3
T_3
Heat Flux
T_5
MC_5
T_{11}
RH_3
MC_1
T_1
MC_4
T_4
T_{10}
RH_2
T_2
MC_2
RH_1
T_9
T_{15}
T_{16}

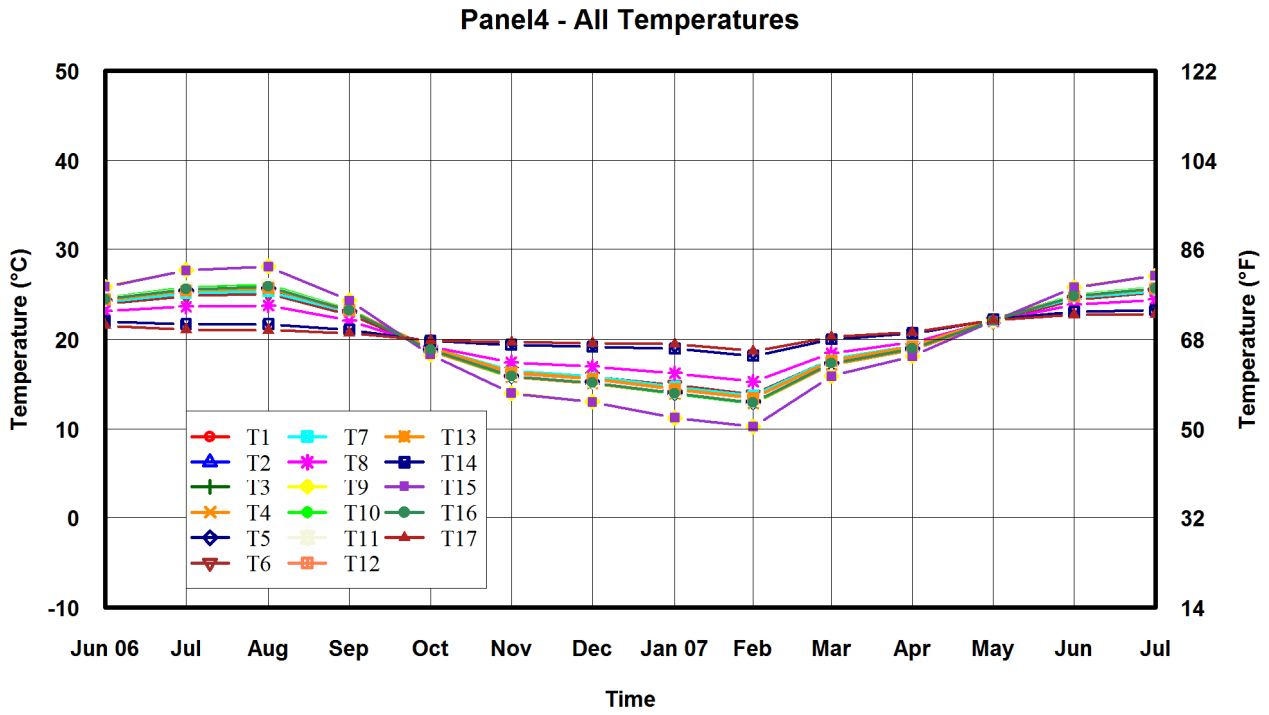

Figure 56: Temperatures in Wall

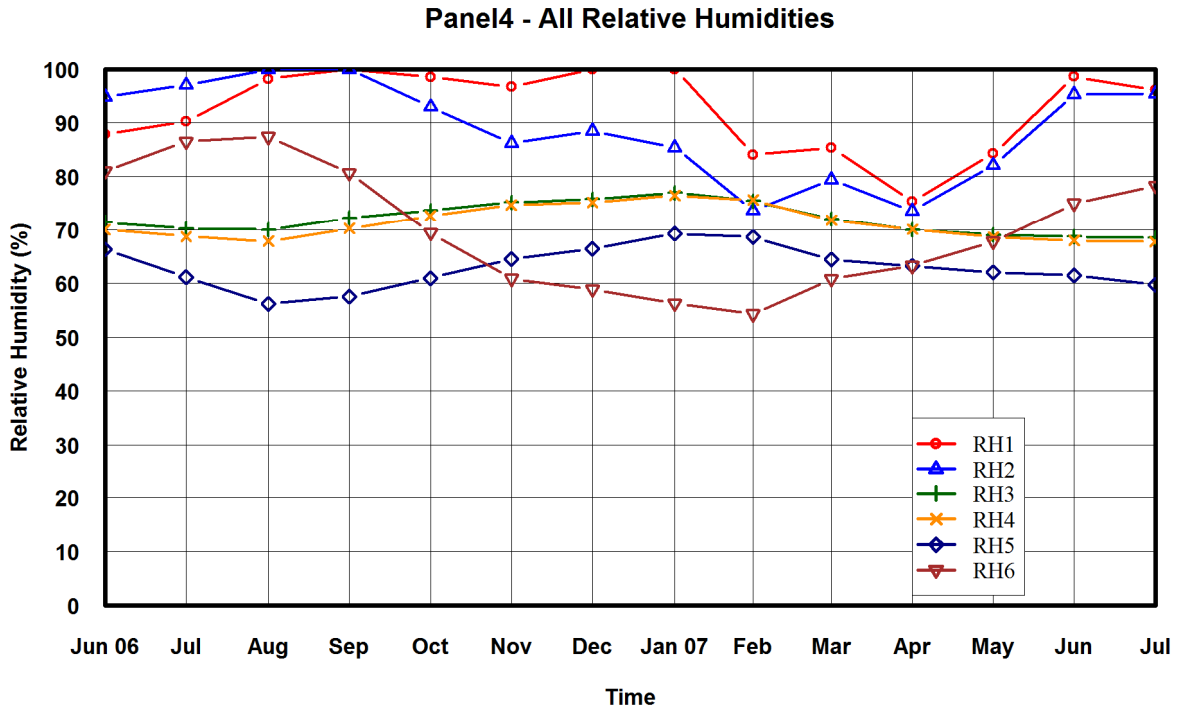

Figure 57: Relative Humidity in Wall

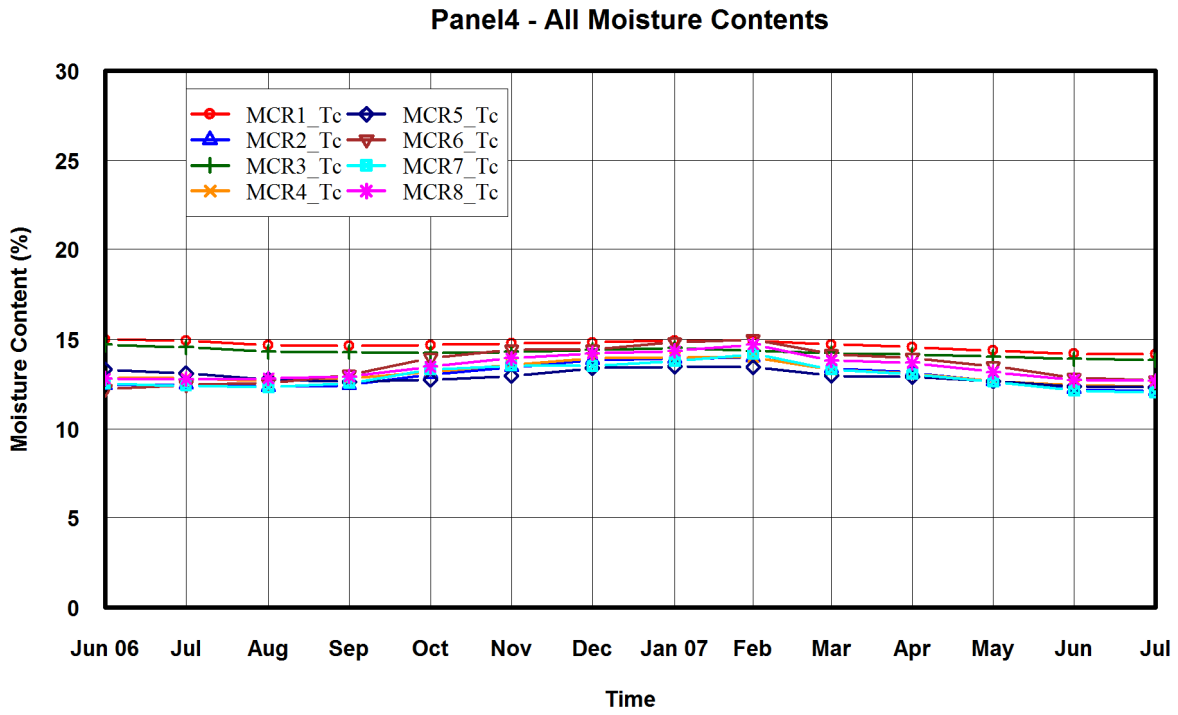

Figure 58: Moisture Content in Wall

Panel 5

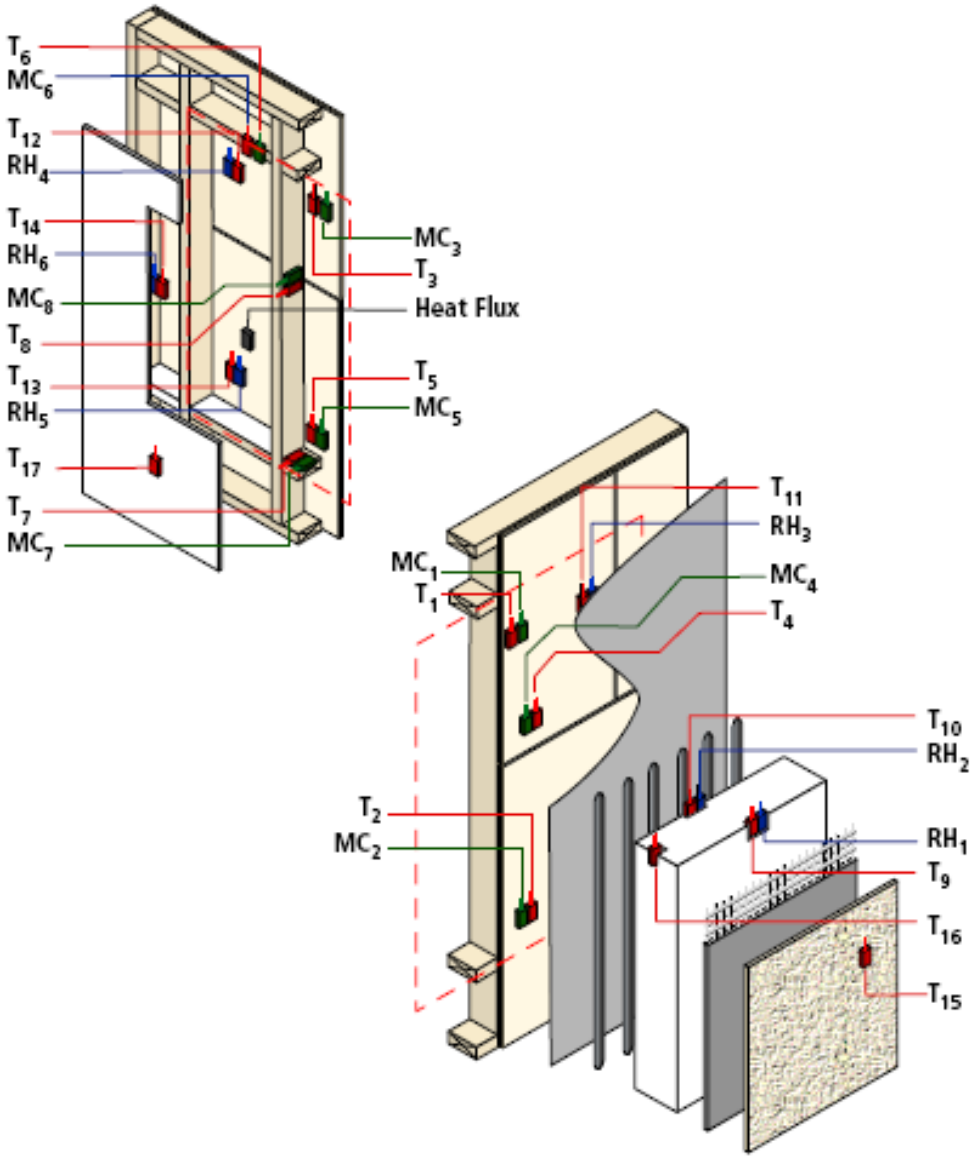
T_6
MC_6
T_{12}
RH_4
T_{14}
RH_6
MC_8
T_8
T_{13}
RH_5
T_{17}
T_7
MC_7
MC_3
T_3
Heat Flux
T_5
MC_5
T_{11}
RH_3
MC_1
T_1
MC_4
T_4
T_{10}
RH_2
T_2
MC_2
RH_1
T_9
T_{16}
T_{15}

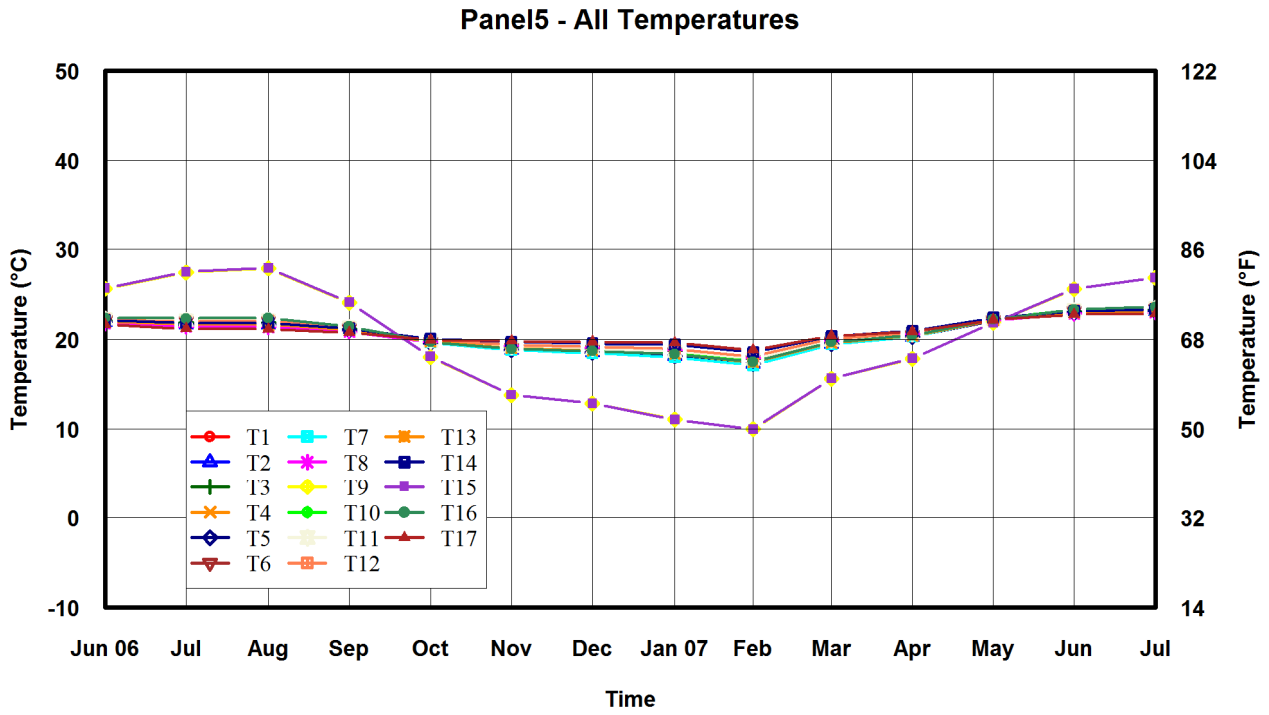

Figure 59: Temperatures in Wall

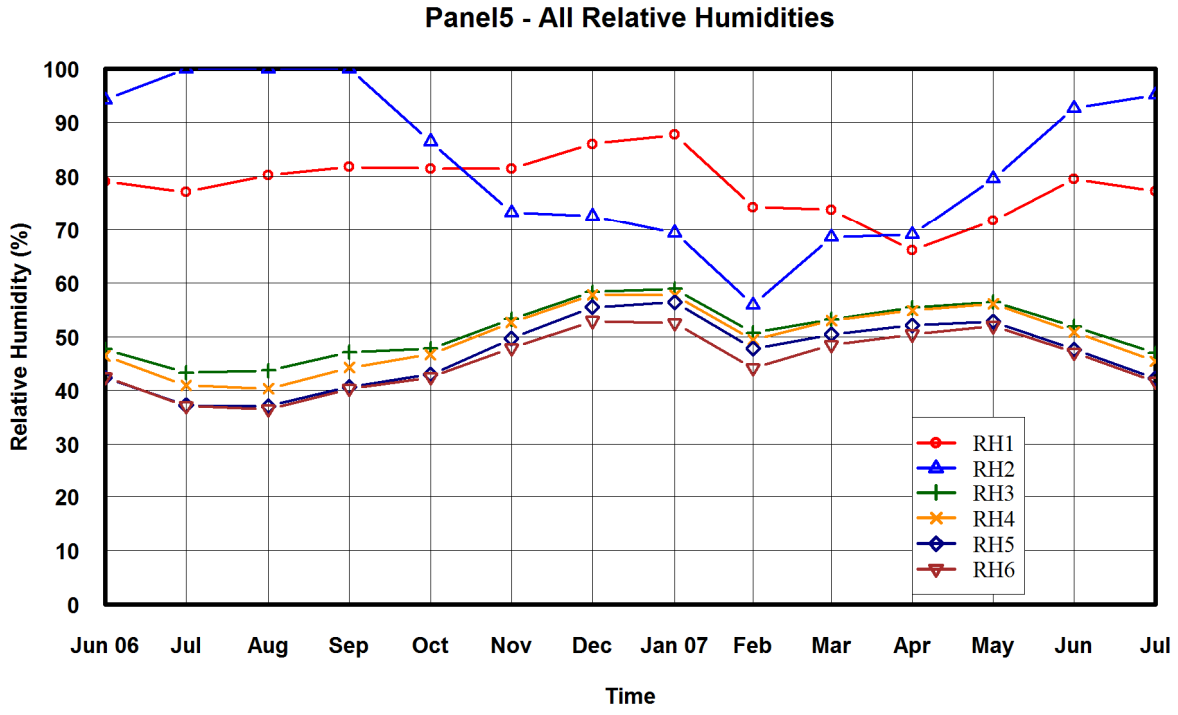

Figure 60: Relative Humidity in Wall

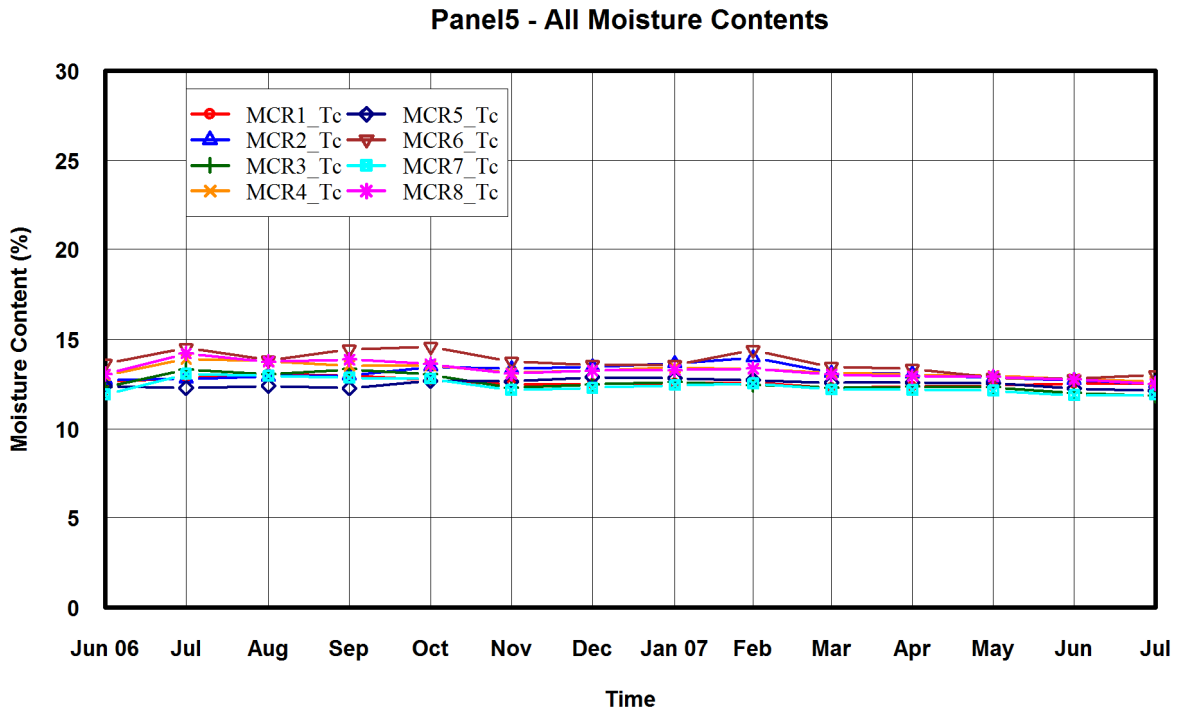

Figure 61: Moisture Content in Wall

Panel 6

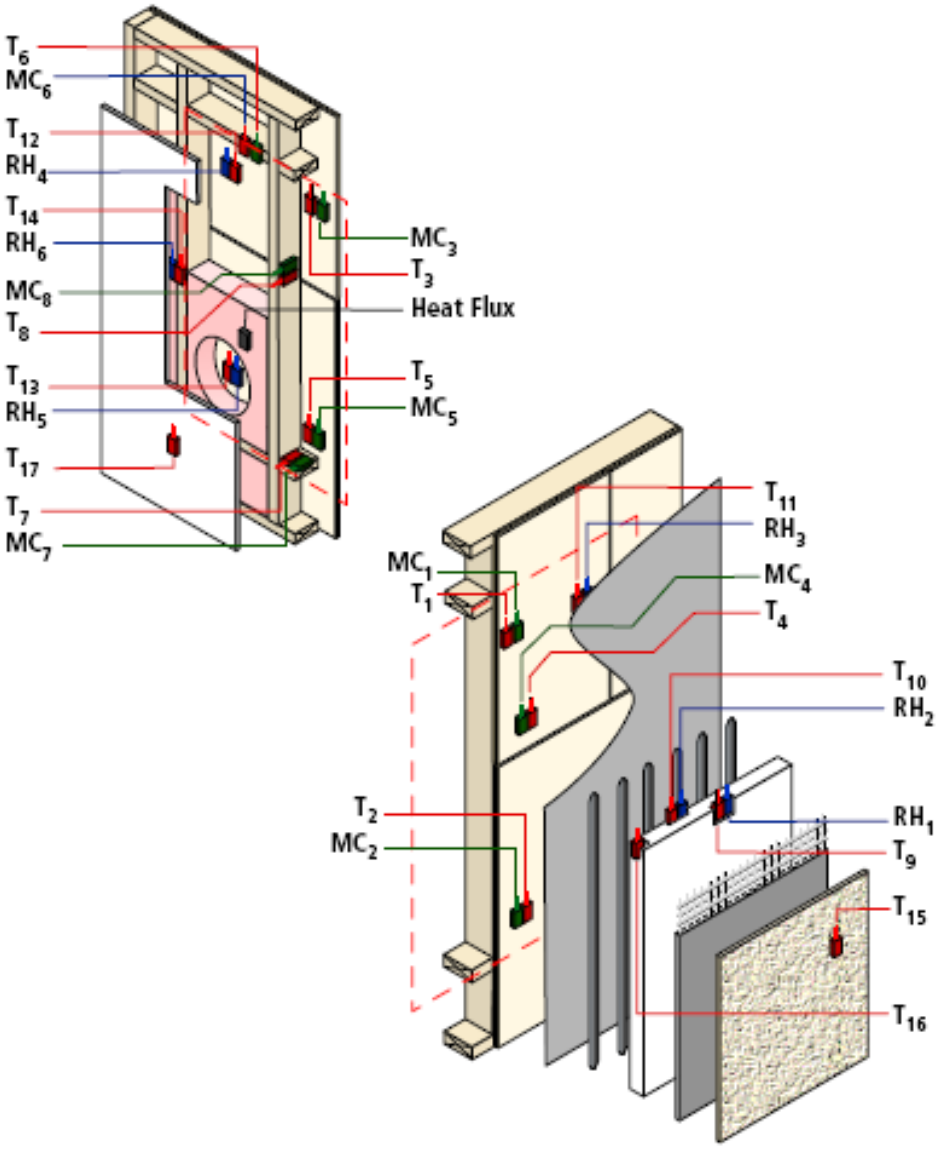
T_6
MC_6
T_{12}
RH_4
T_{14}
RH_6
MC_8
T_8
T_{13}
RH_5
T_{17}
T_7
MC_7
MC_3
T_3
Heat Flux
T_5
MC_5
T_{11}
RH_3
MC_1
T_1
MC_4
T_4
T_{10}
RH_2
T_2
MC_2
RH_1
T_9
T_{15}
T_{16}

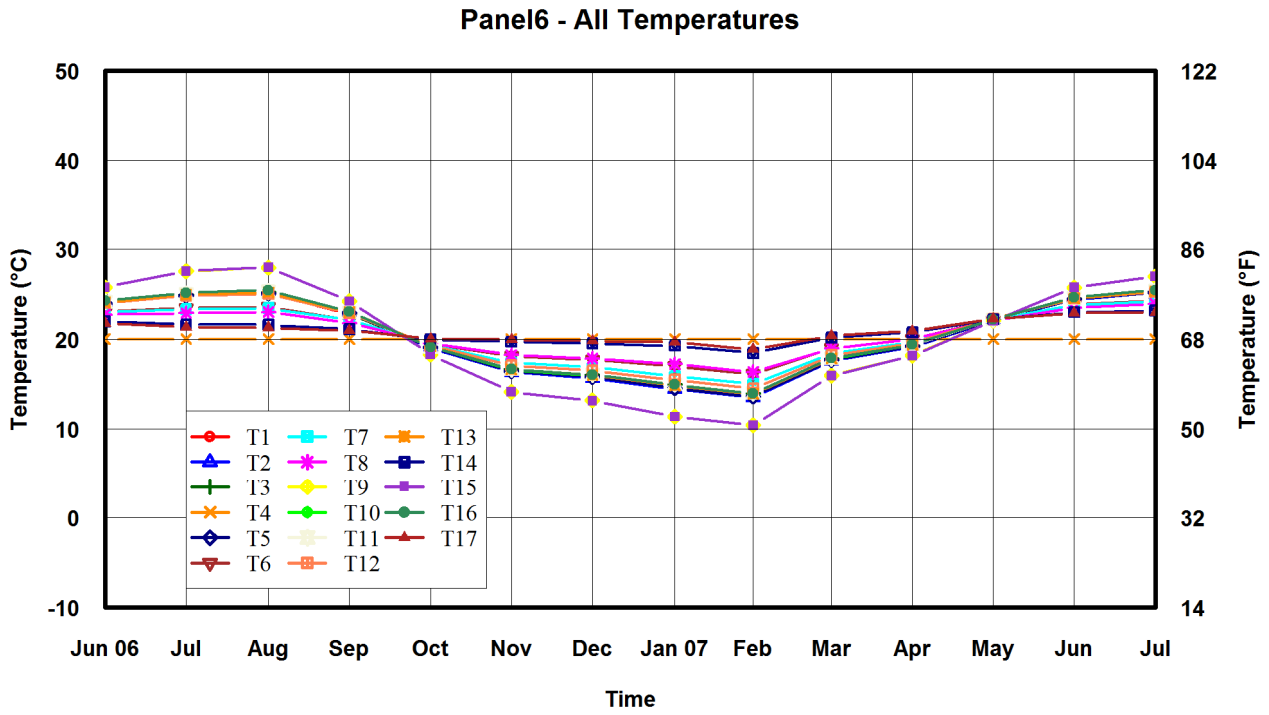

Figure 62: Temperatures in Wall

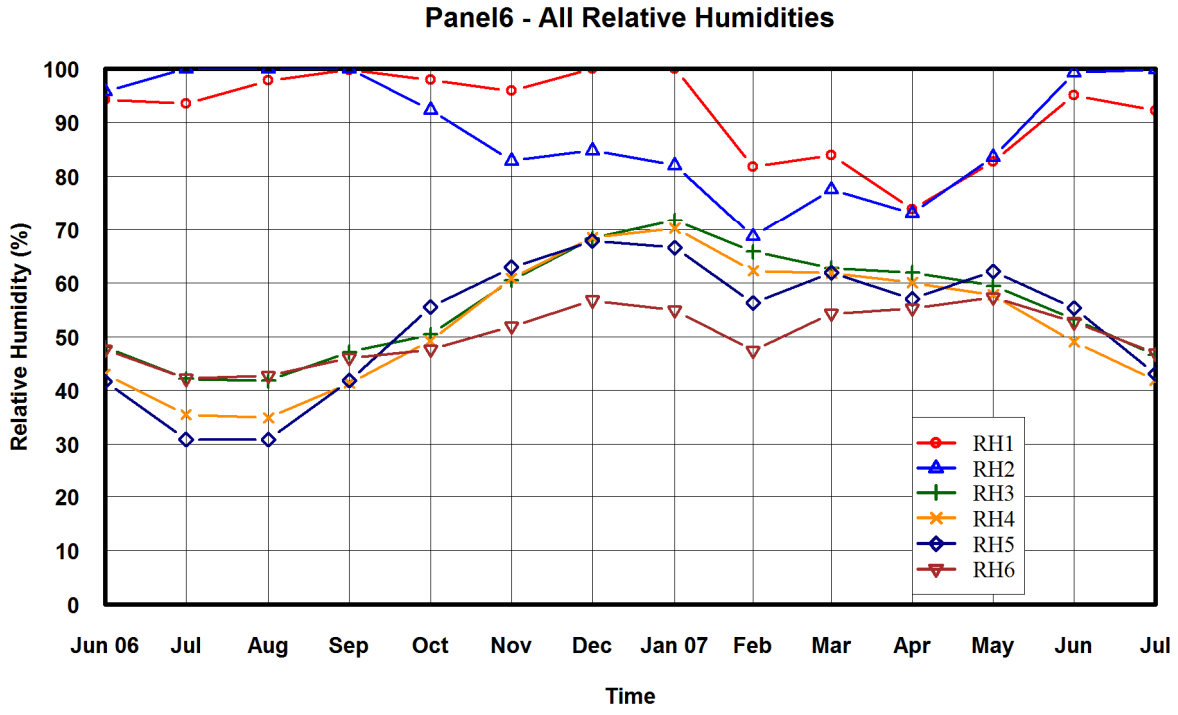

Figure 63: Relative Humidity in Wall

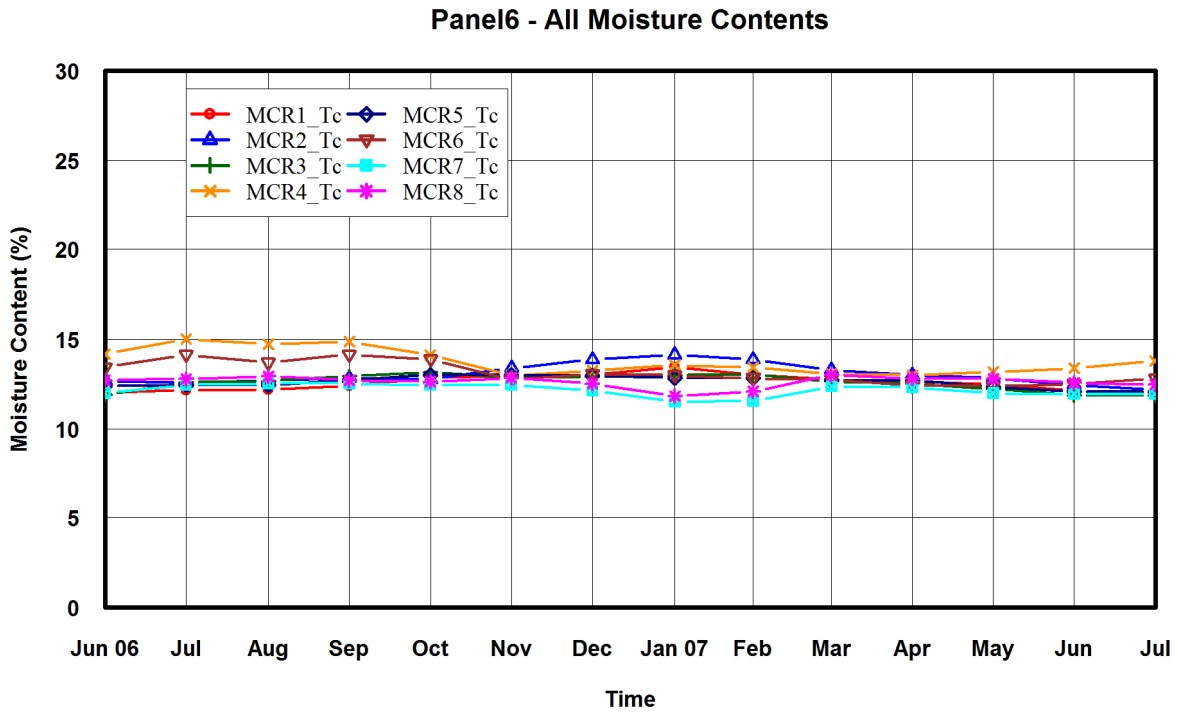

Figure 64: Moisture Content in Wall

Panel 7

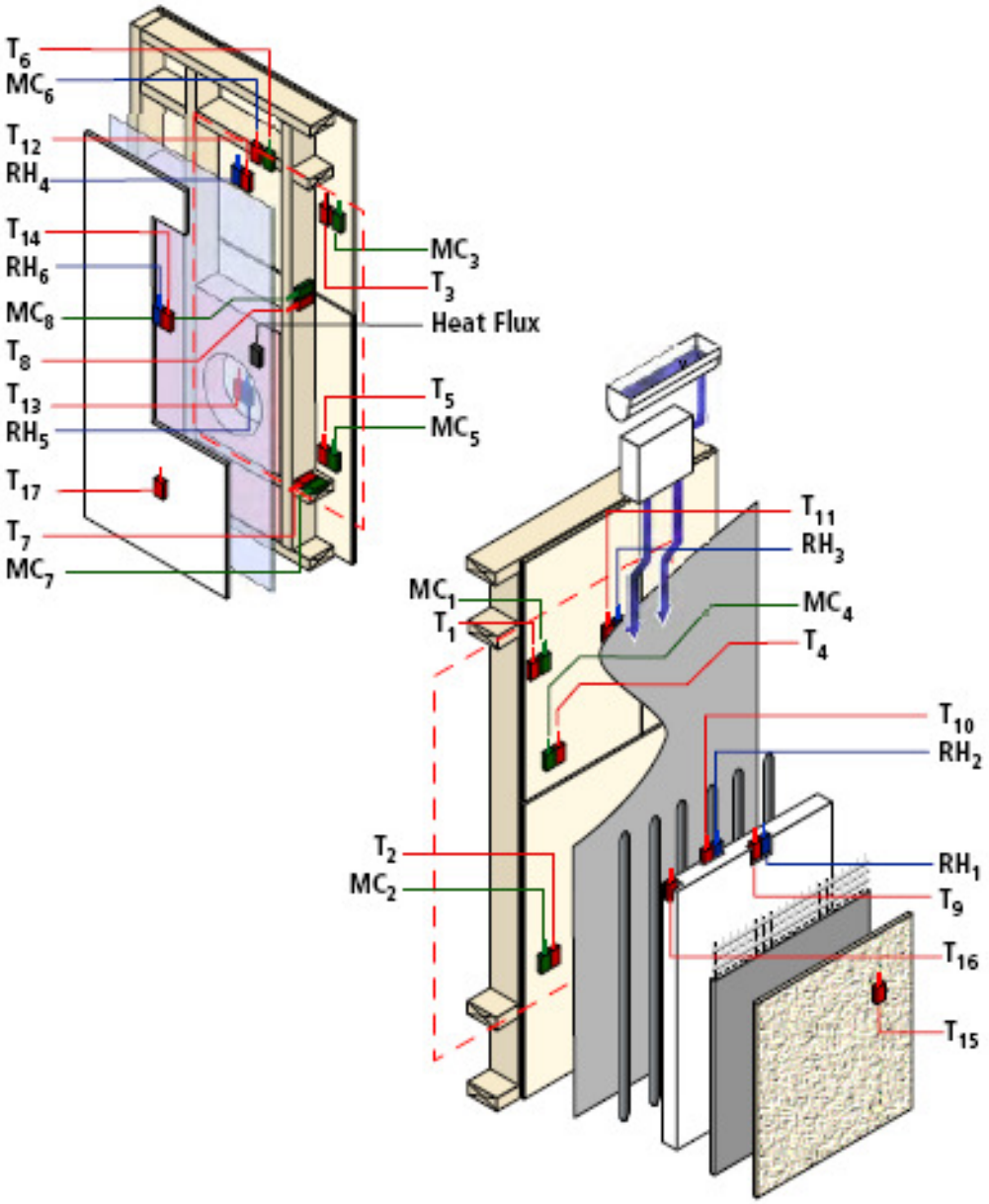
T_6
MC_6
T_{12}
RH_4
T_{14}
RH_6
MC_8
T_8
T_{13}
RH_5
T_{17}
T_7
MC_7
MC_3
T_3
Heat Flux
T_5
MC_5
T_{11}
RH_3
MC_1
T_1
MC_4
T_4
T_{10}
RH_2
T_2
MC_2
RH_1
T_9
T_{16}
T_{15}

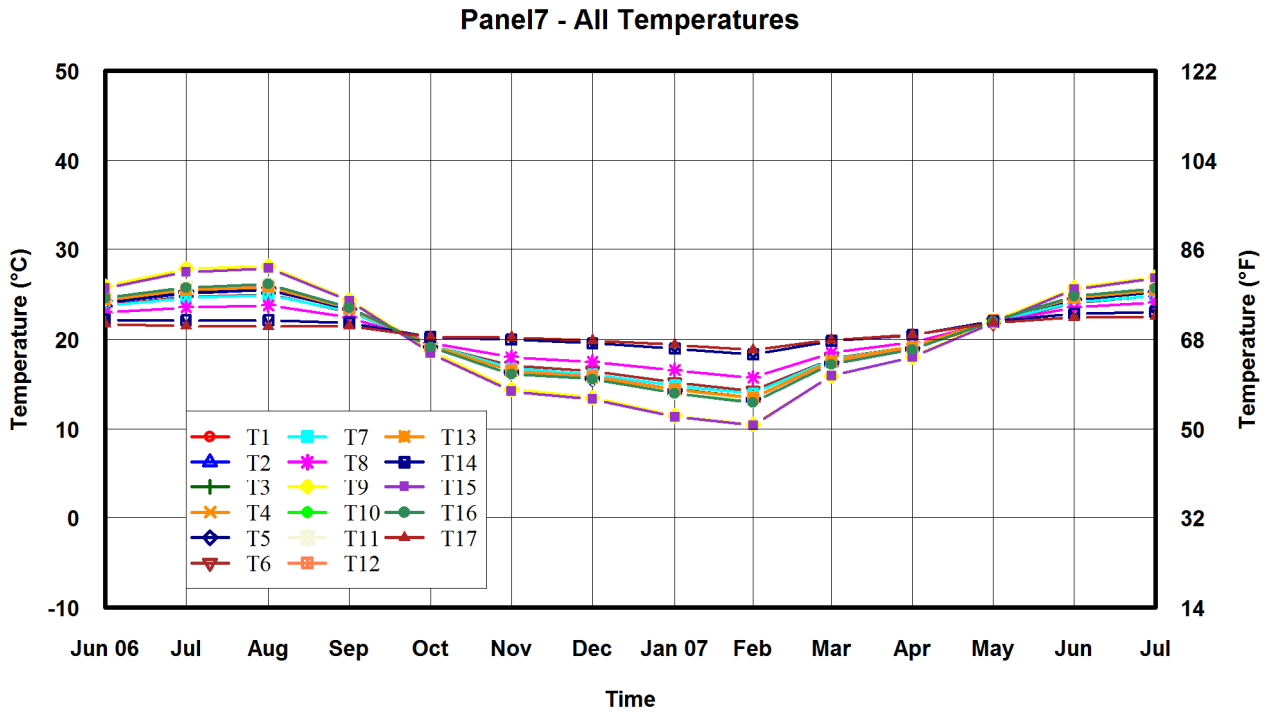

Figure 65: Temperatures in Wall

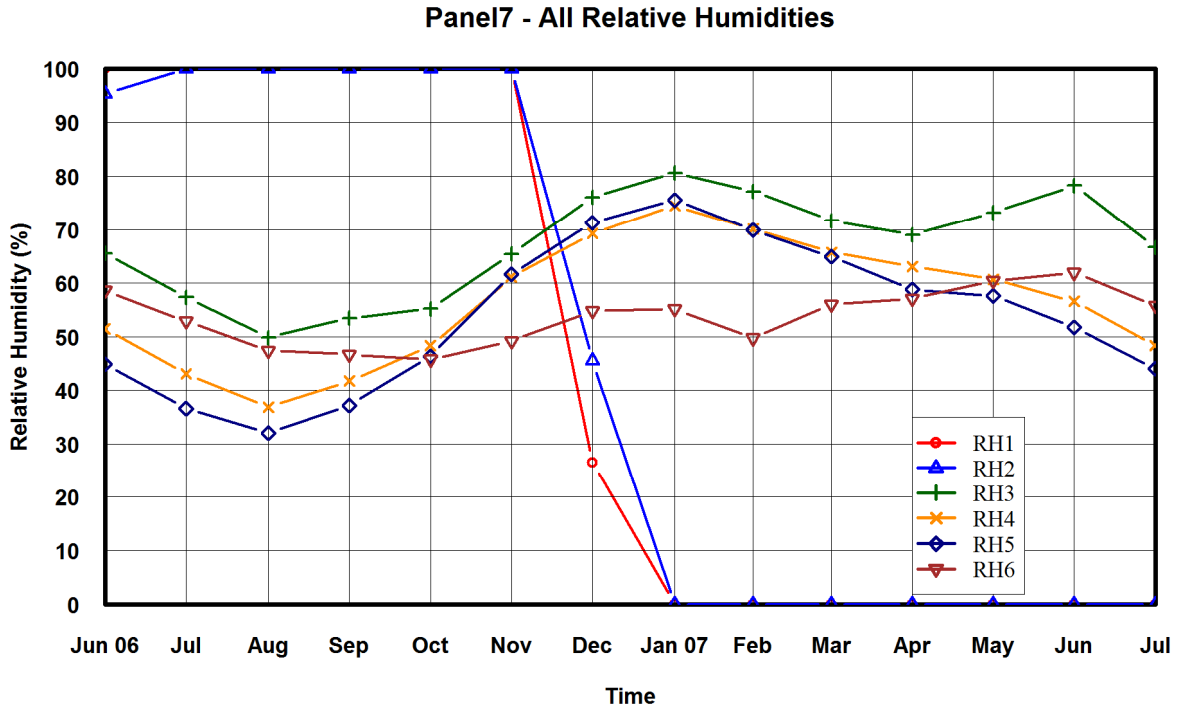

Figure 66: Relative Humidity in Wall

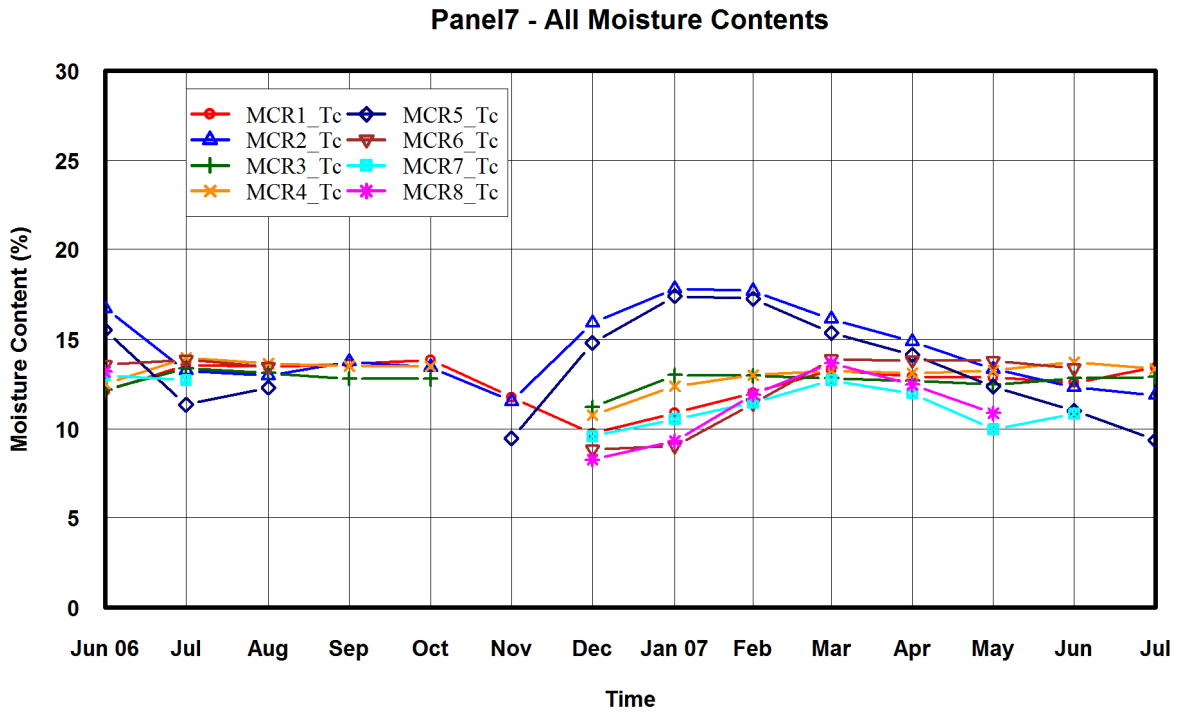

Figure 67: Moisture Content in Wall

Panel 9

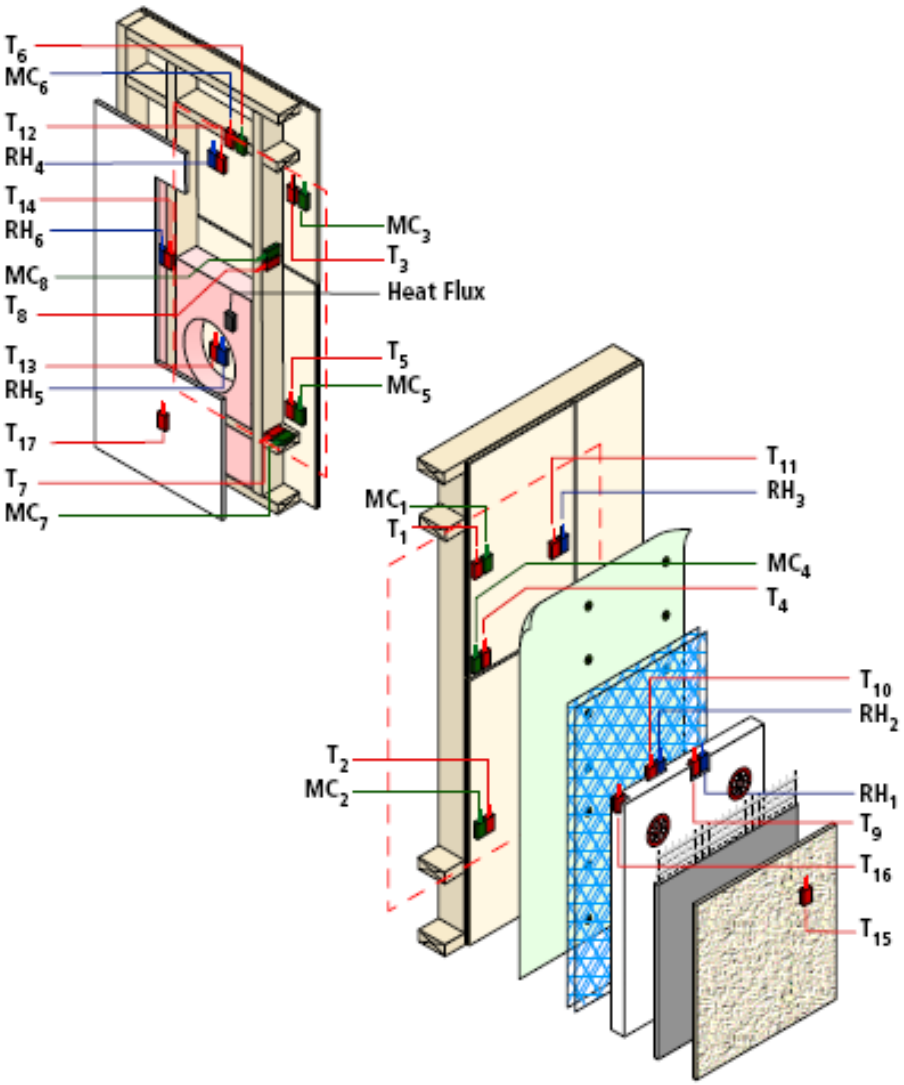
T_6
MC_6
T_{12}
RH_4
T_{14}
RH_6
MC_8
T_8
T_{13}
RH_5
T_{17}
T_7
MC_7
MC_3
T_3
Heat Flux
T_5
MC_5
T_{11}
RH_3
MC_1
T_1
MC_4
T_4
T_{10}
RH_2
T_2
MC_2
RH_1
T_9
T_{16}
T_{15}

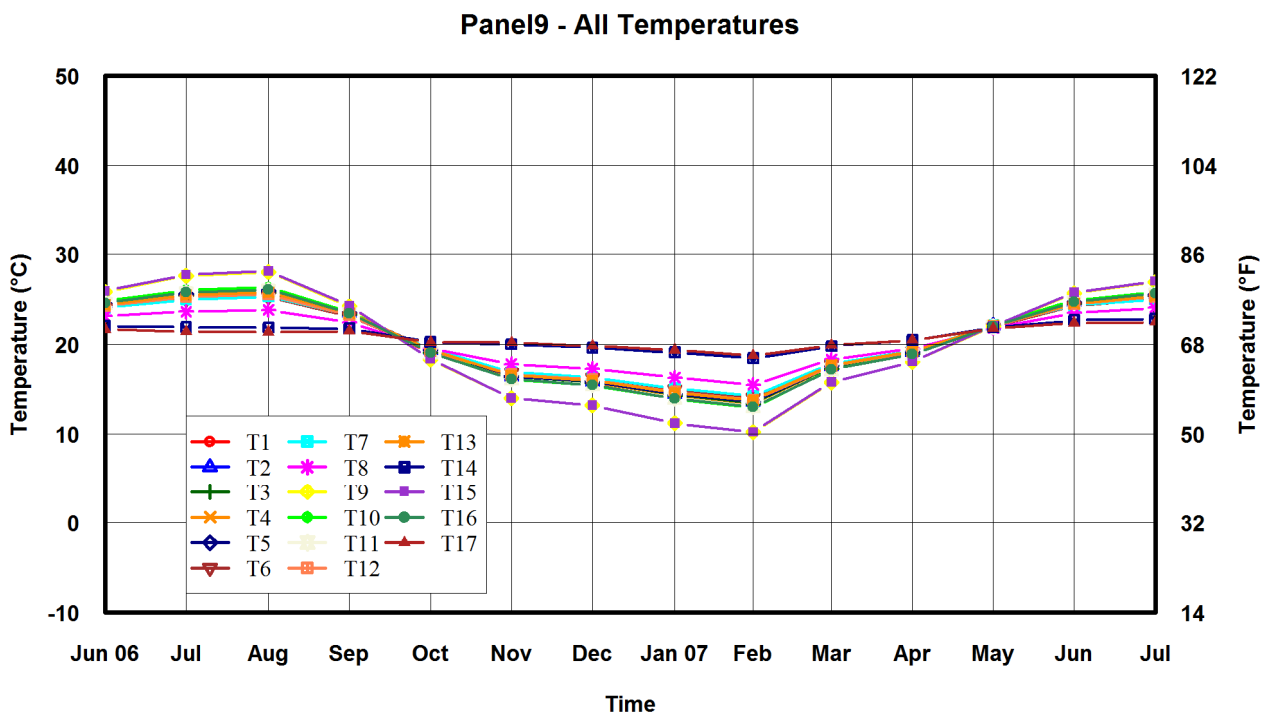

Figure 68: Temperatures in Wall

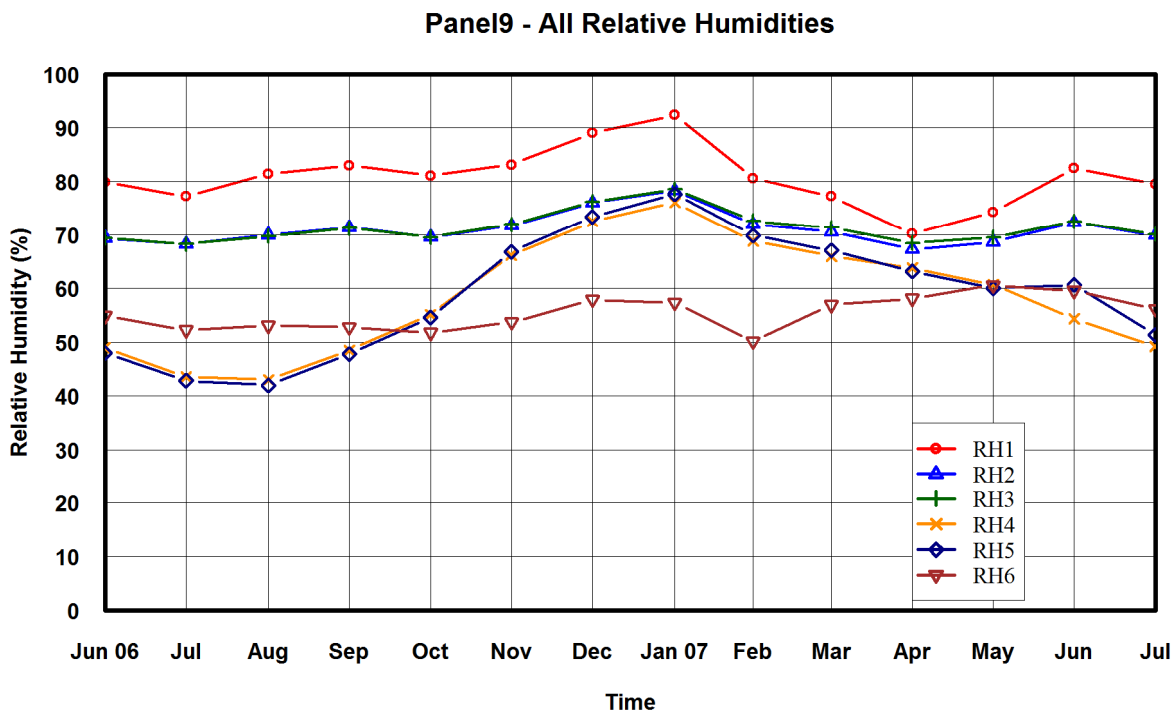

Figure 69: Relative Humidity in Wall

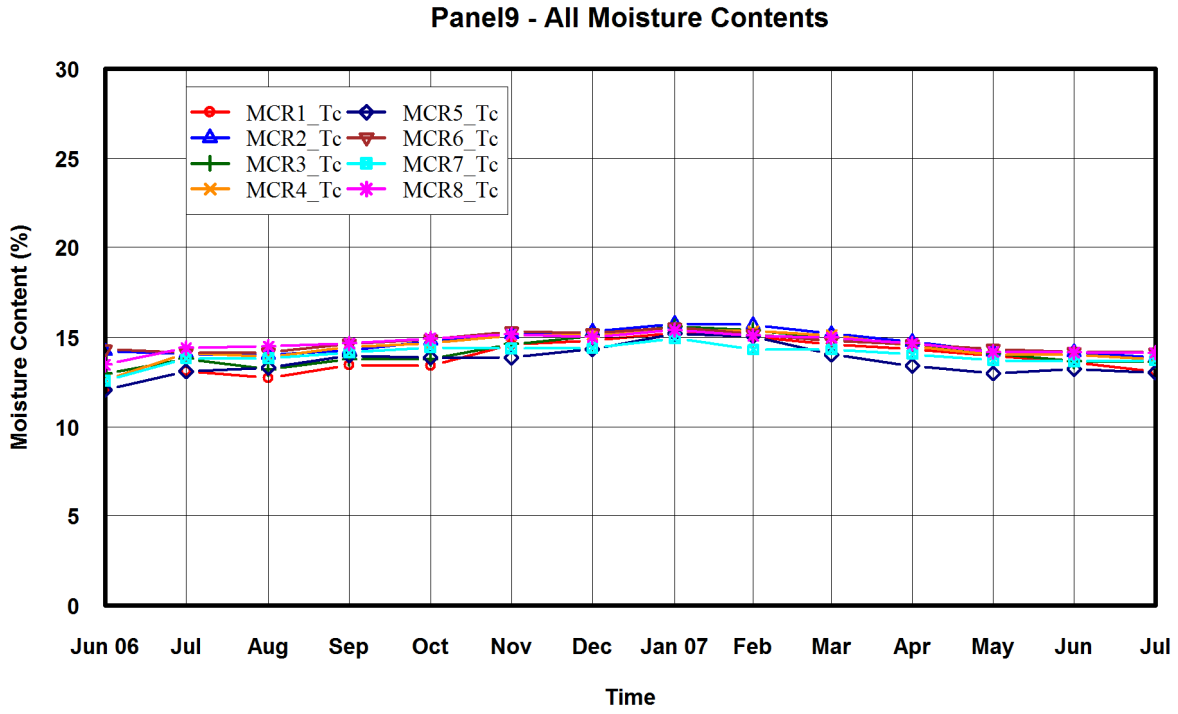

Figure 70: Moisture Content in Wall

Panel 10

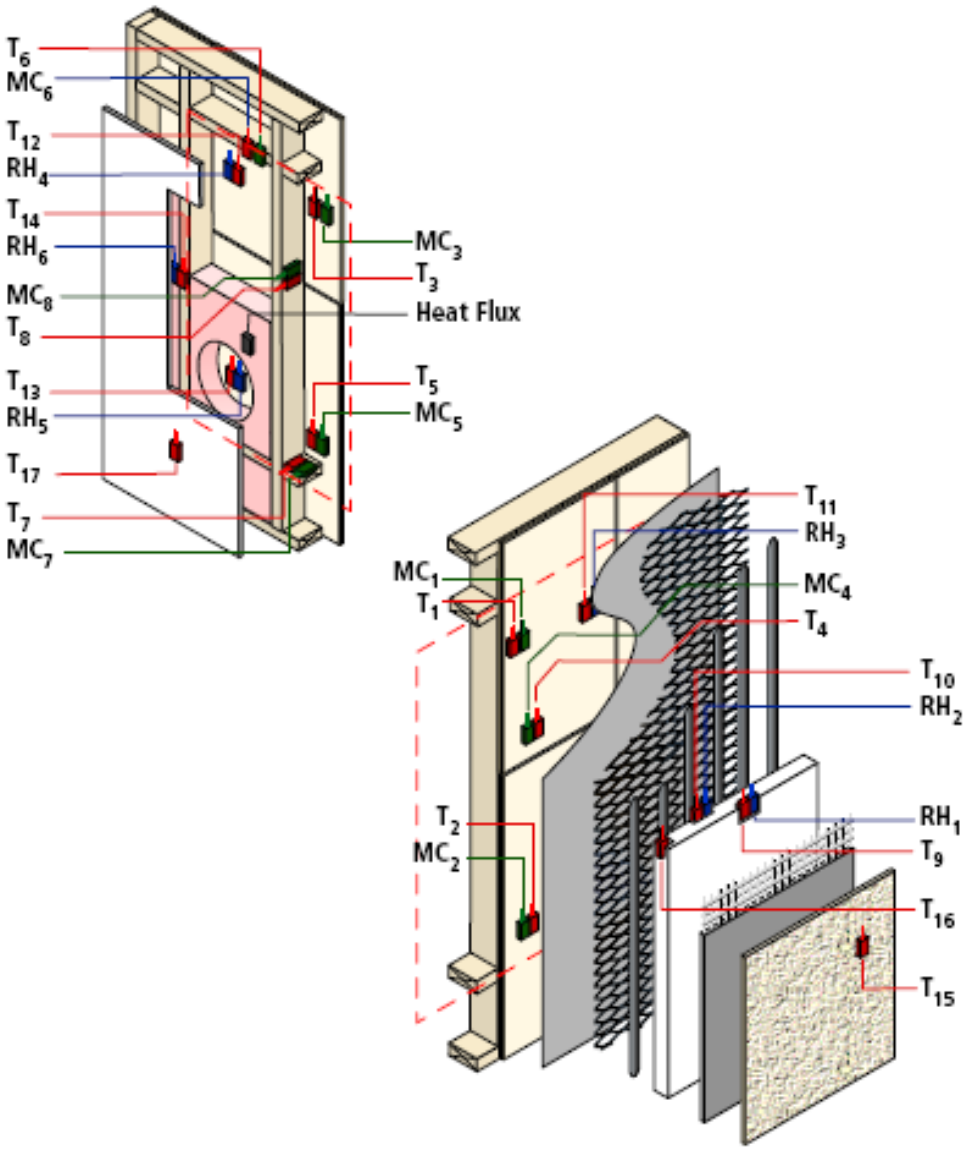
T_6
MC_6
T_{12}
RH_4
T_{14}
RH_6
MC_8
T_8
T_{13}
RH_5
T_{17}
T_7
MC_7
MC_3
T_3
Heat Flux
T_5
MC_5
T_{11}
RH_3
MC_1
T_1
MC_4
T_4
T_{10}
RH_2
T_2
MC_2
RH_1
T_9
T_{16}
T_{15}

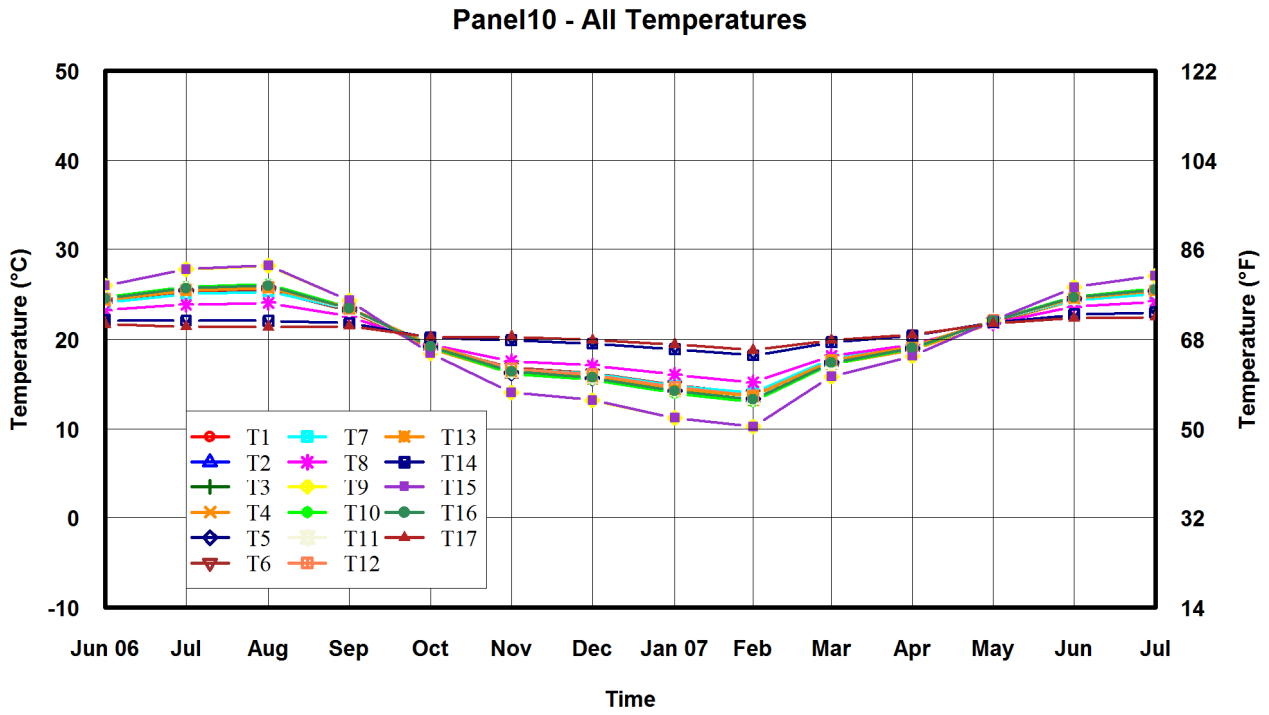

Figure 71: Temperatures in Wall

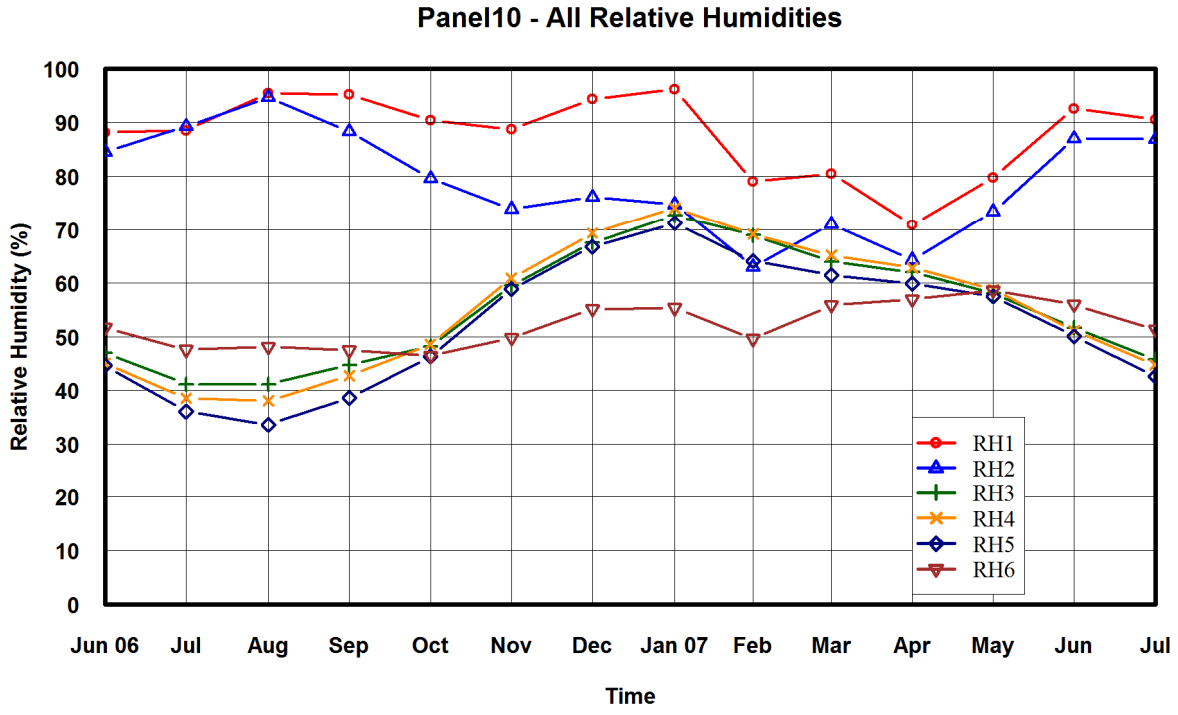

Figure 72: Relative Humidity in Wall

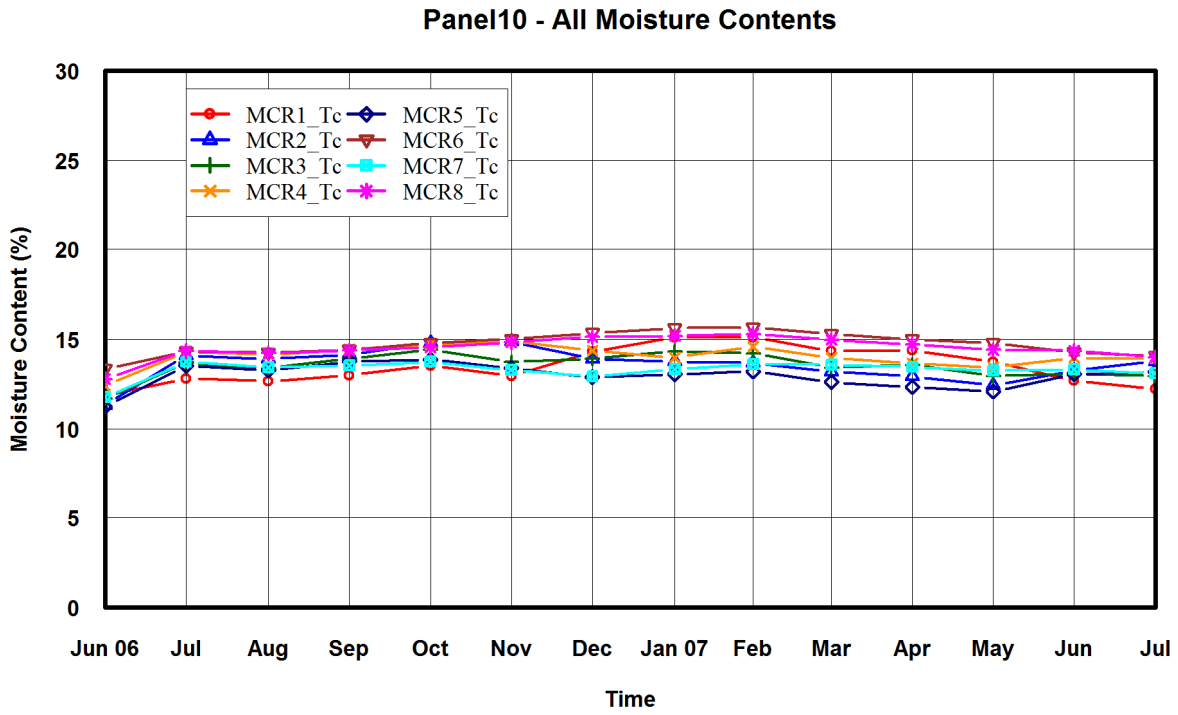

Figure 73: Moisture Content in Wall

Panel 12

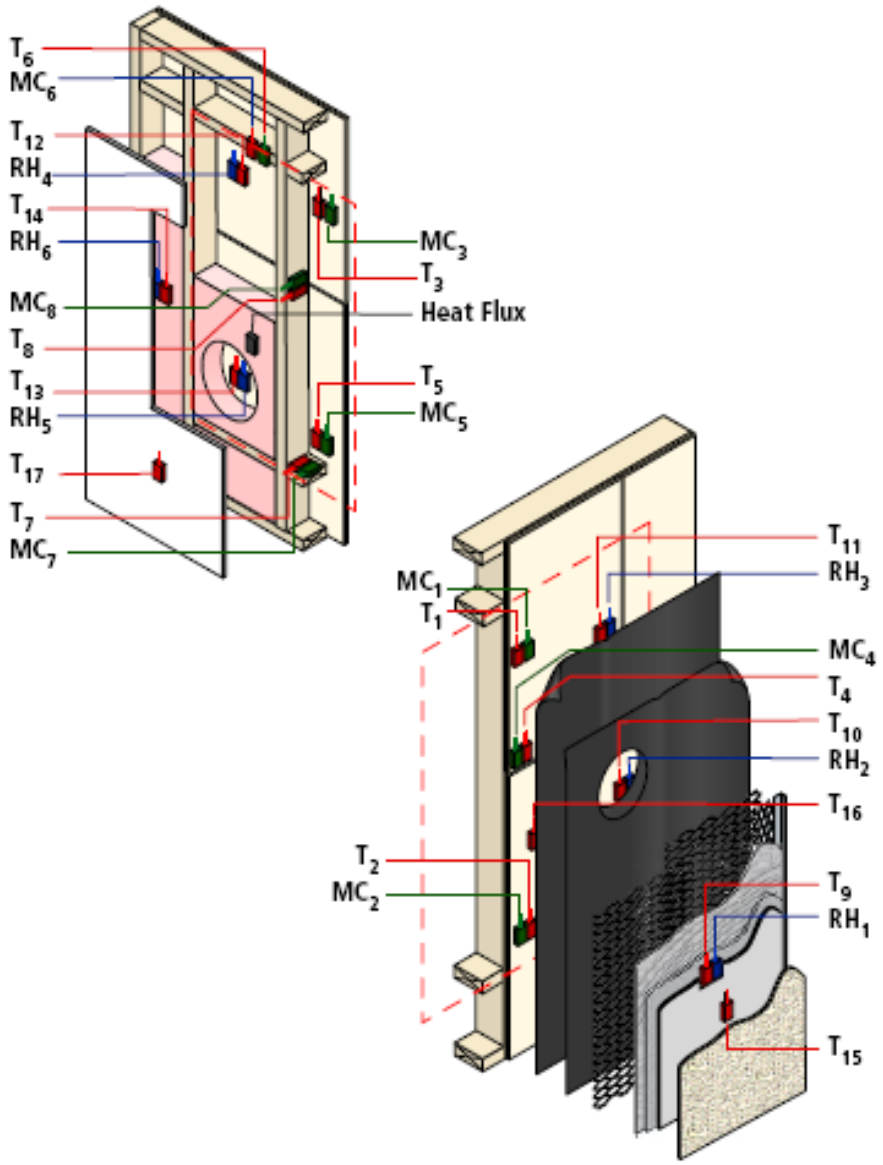
T_6
MC_6
T_{12}
RH_4
T_{14}
RH_6
MC_8
T_8
T_{13}
RH_5
T_{17}
T_7
MC_7
MC_3
T_3
Heat Flux
T_5
MC_5
T_{11}
RH_3
MC_1
T_1
MC_4
T_4
T_{10}
RH_2
T_{16}
T_2
MC_2
T_9
RH_1
T_{15}

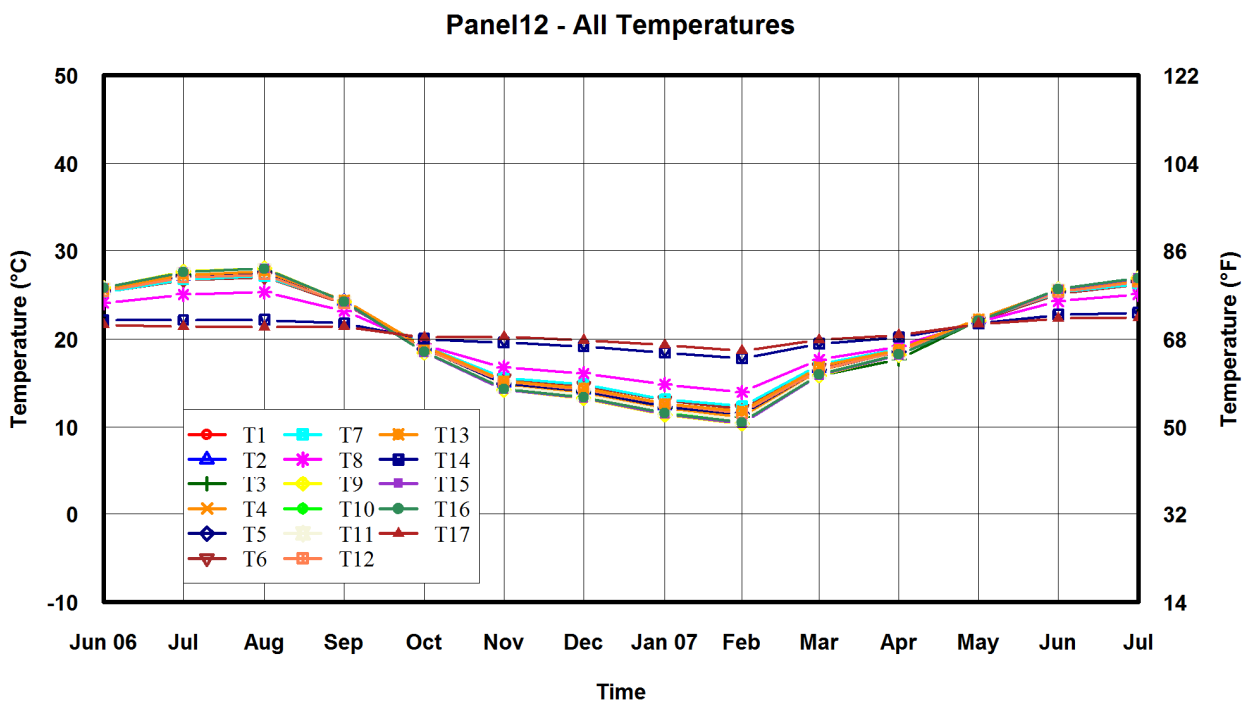

Figure 74: Temperatures in Wall

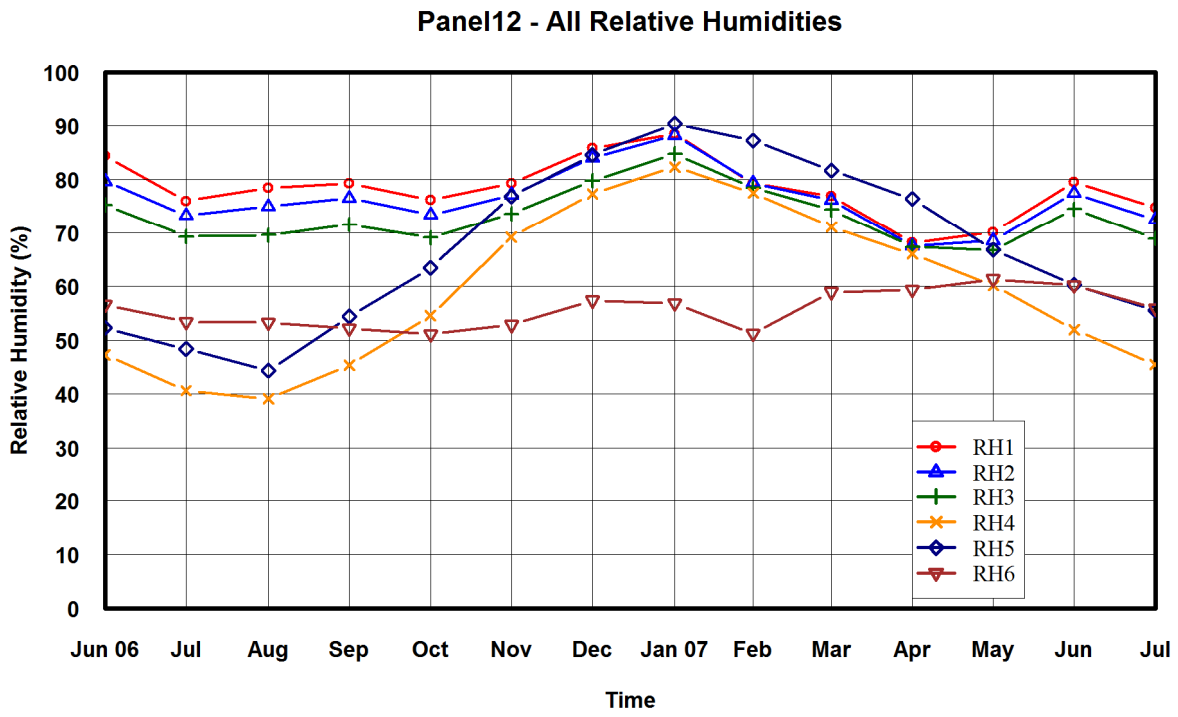

Figure 75: Relative Humidity in Wall

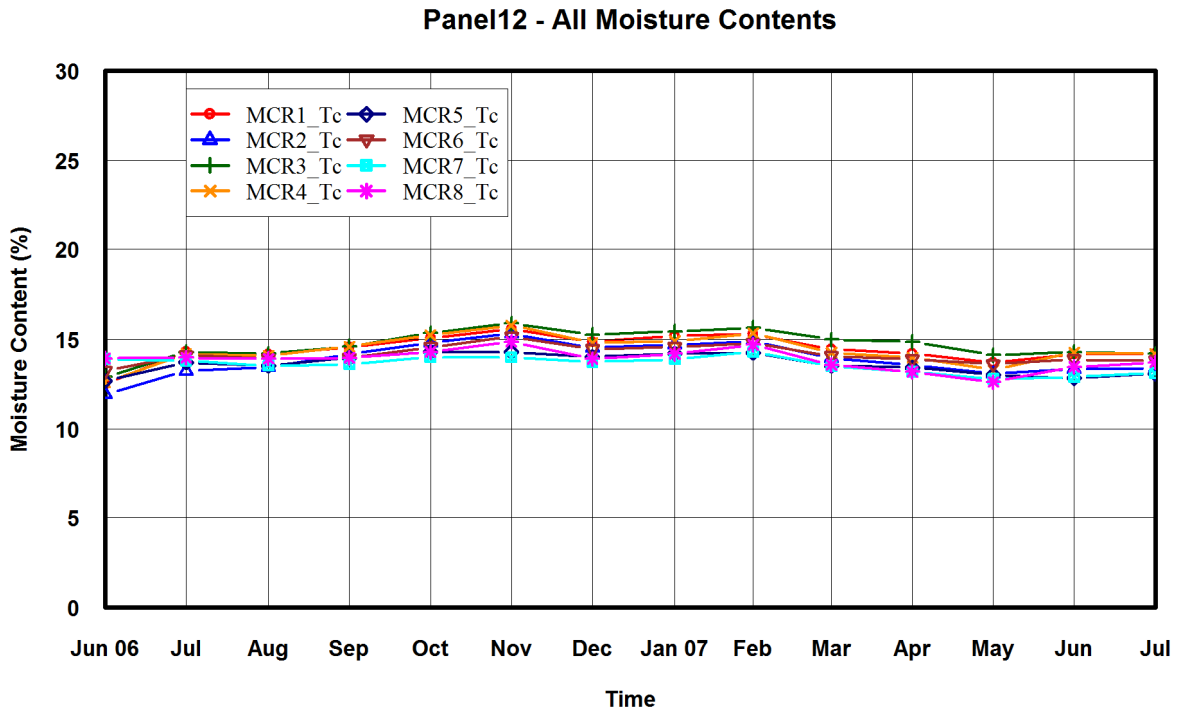

Figure 76: Moisture Content in Wall

Panel 14

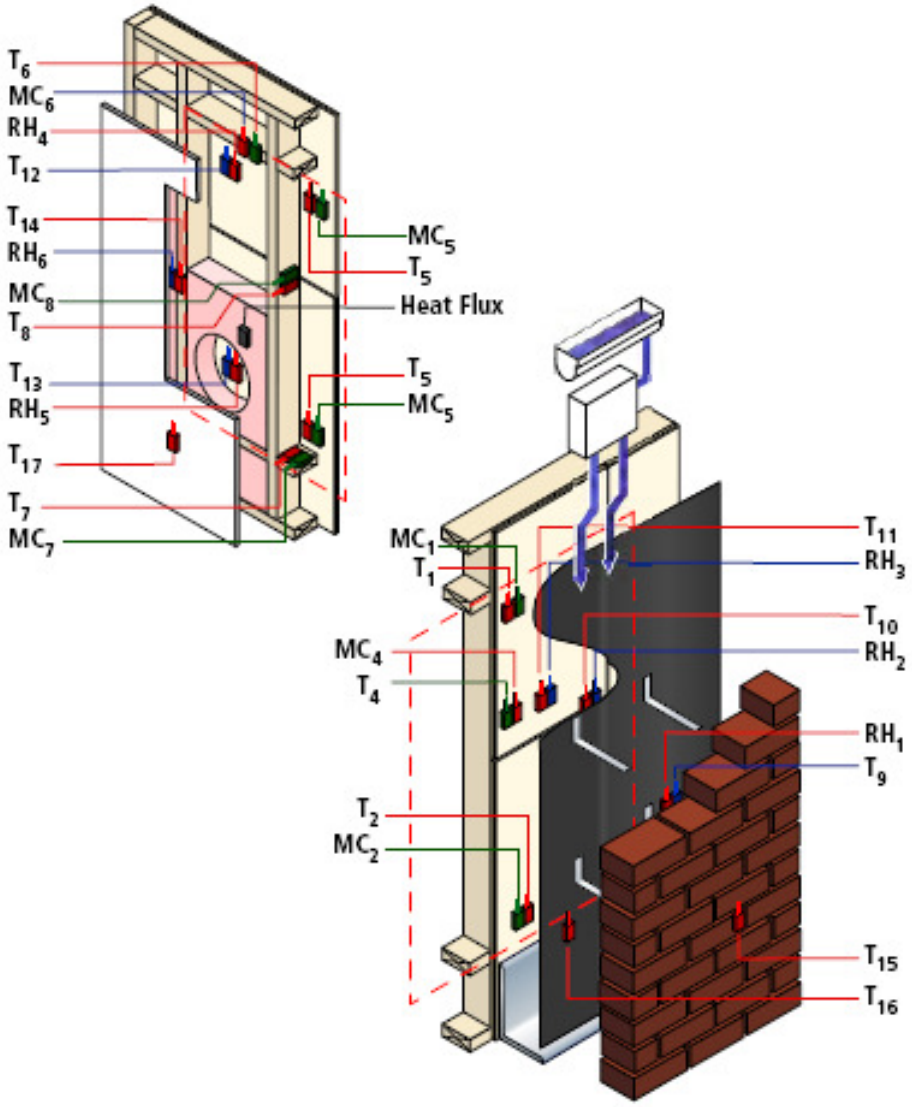
T_6
MC_6
RH_4
T_{12}
T_{14}
RH_6
MC_8
T_8
T_{13}
RH_5
T_{17}
T_7
MC_7
MC_5
T_5
Heat Flux
T_5
MC_5
MC_1
T_1
MC_4
T_4
T_2
MC_2
T_{11}
RH_3
T_{10}
RH_2
RH_1
T_9
T_{15}
T_{16}

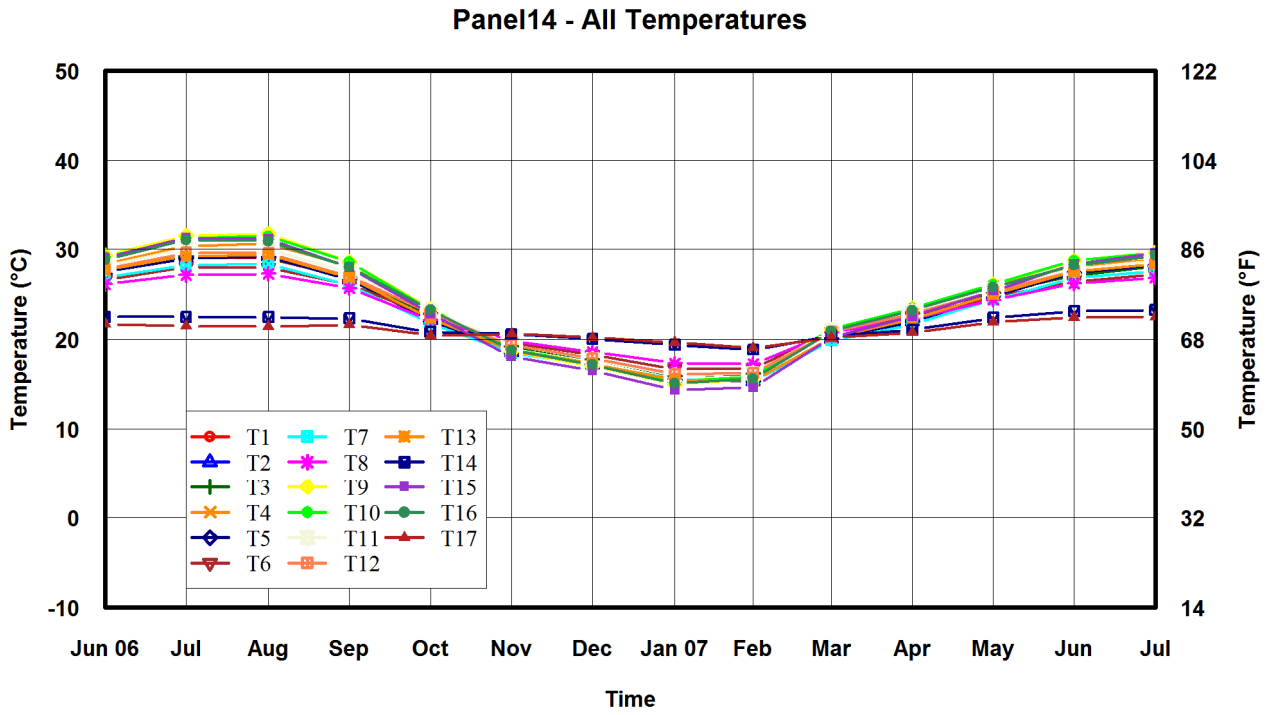

Figure 77: Temperatures in Wall

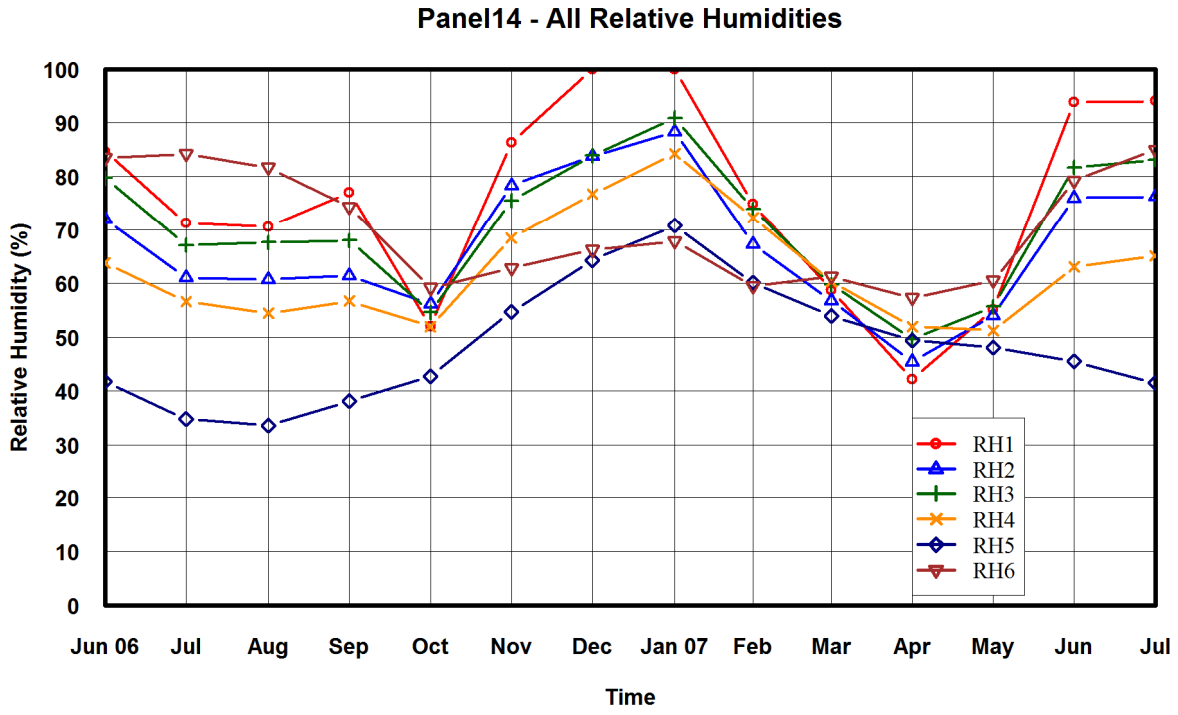

Figure 78: Relative Humidity in Wall

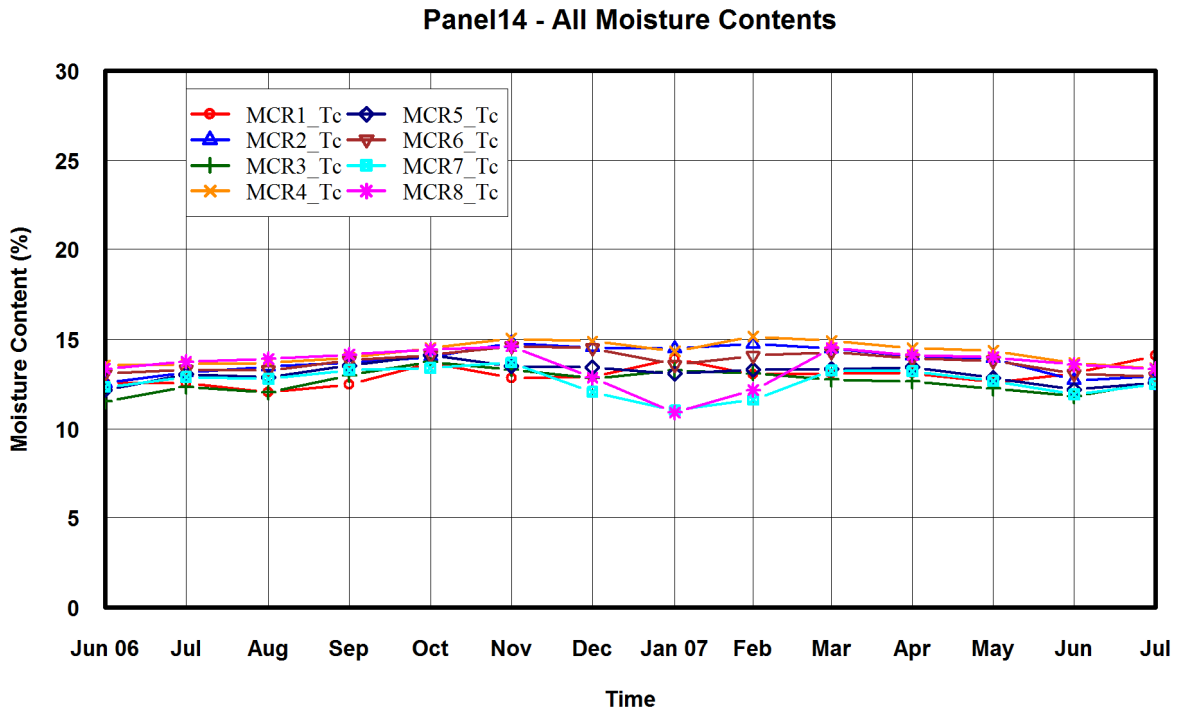

Figure 79: Moisture Content in Wall

Panel 15

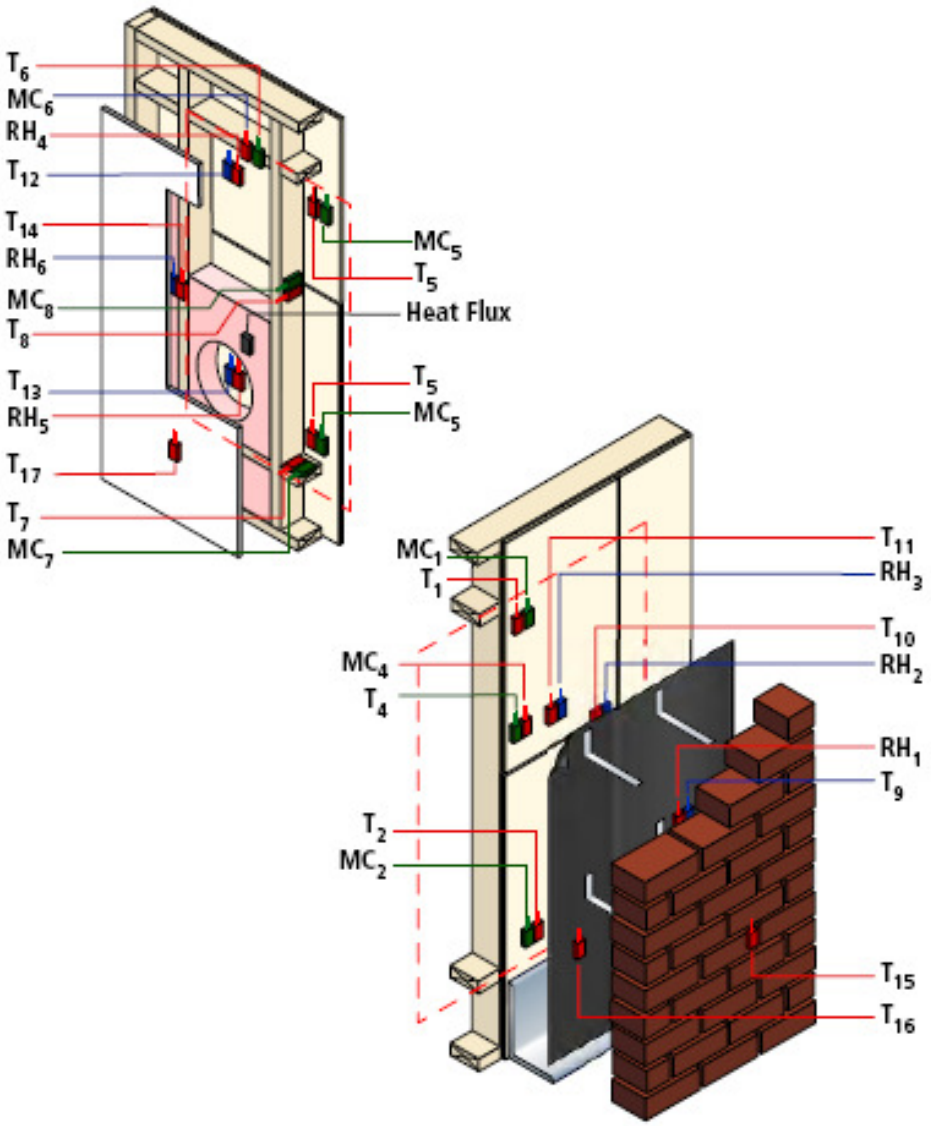
T_6
MC_6
RH_4
T_{12}
T_{14}
RH_6
MC_8
T_8
T_{13}
RH_5
T_{17}
T_7
MC_7
MC_5
T_5
Heat Flux
T_5
MC_5
MC_1
T_1
MC_4
T_4
T_2
MC_2
T_{11}
RH_3
T_{10}
RH_2
RH_1
T_9
T_{15}
T_{16}

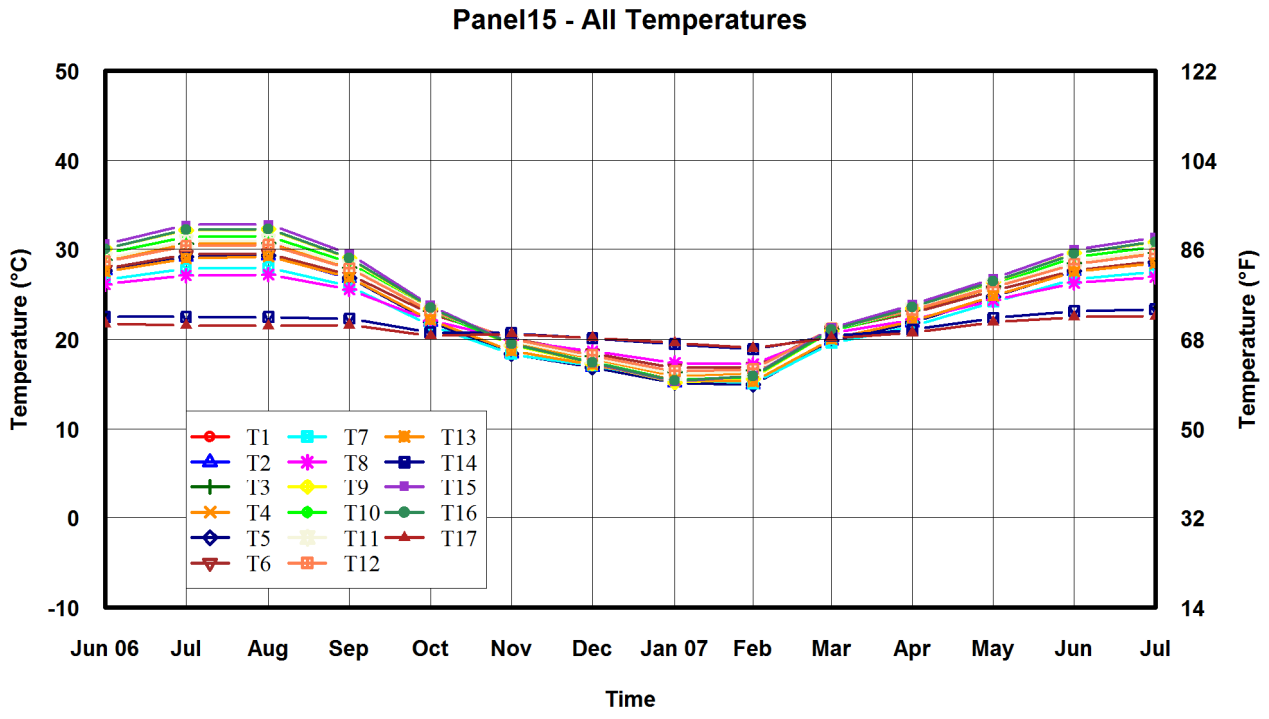

Figure 80: Temperatures in Wall

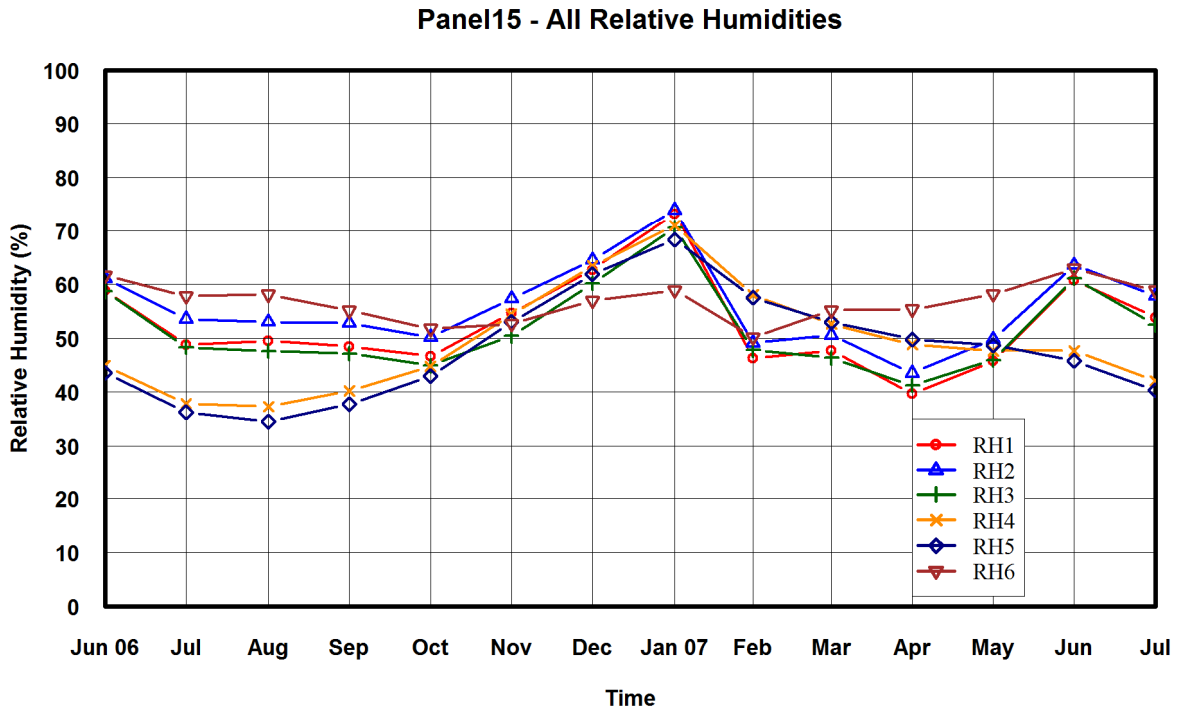

Figure 81: Relative Humidity in Wall

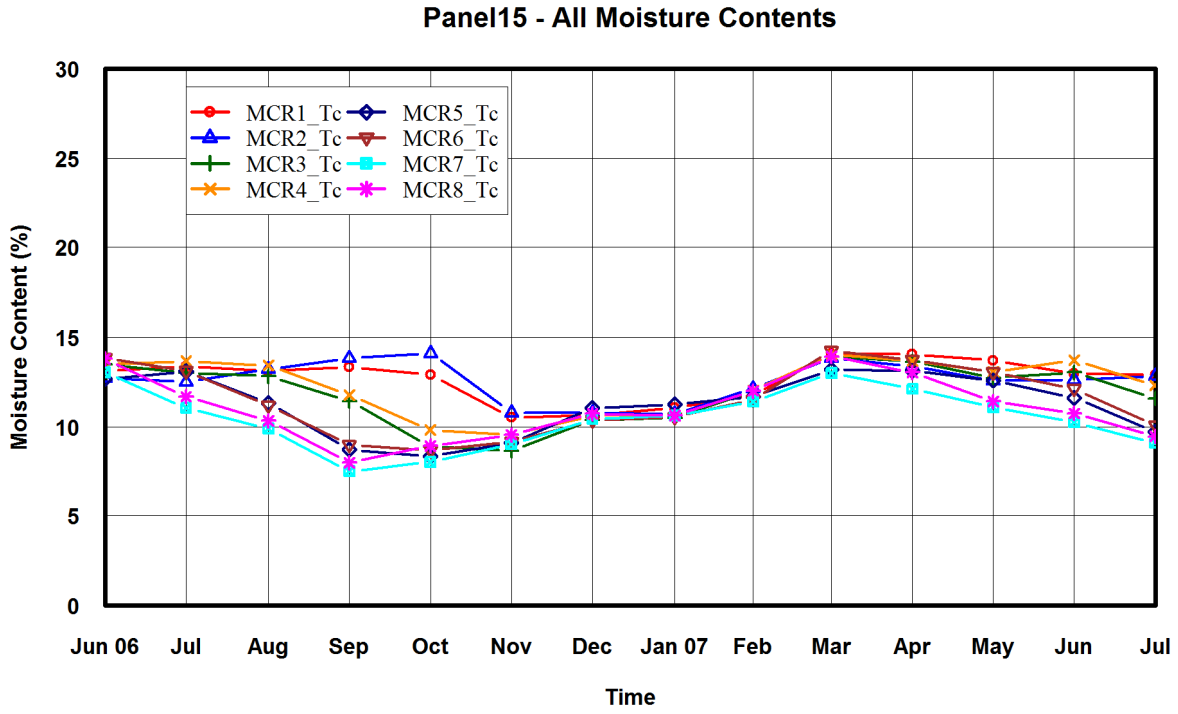

Figure 82: Moisture Content in Wall

Panel 16

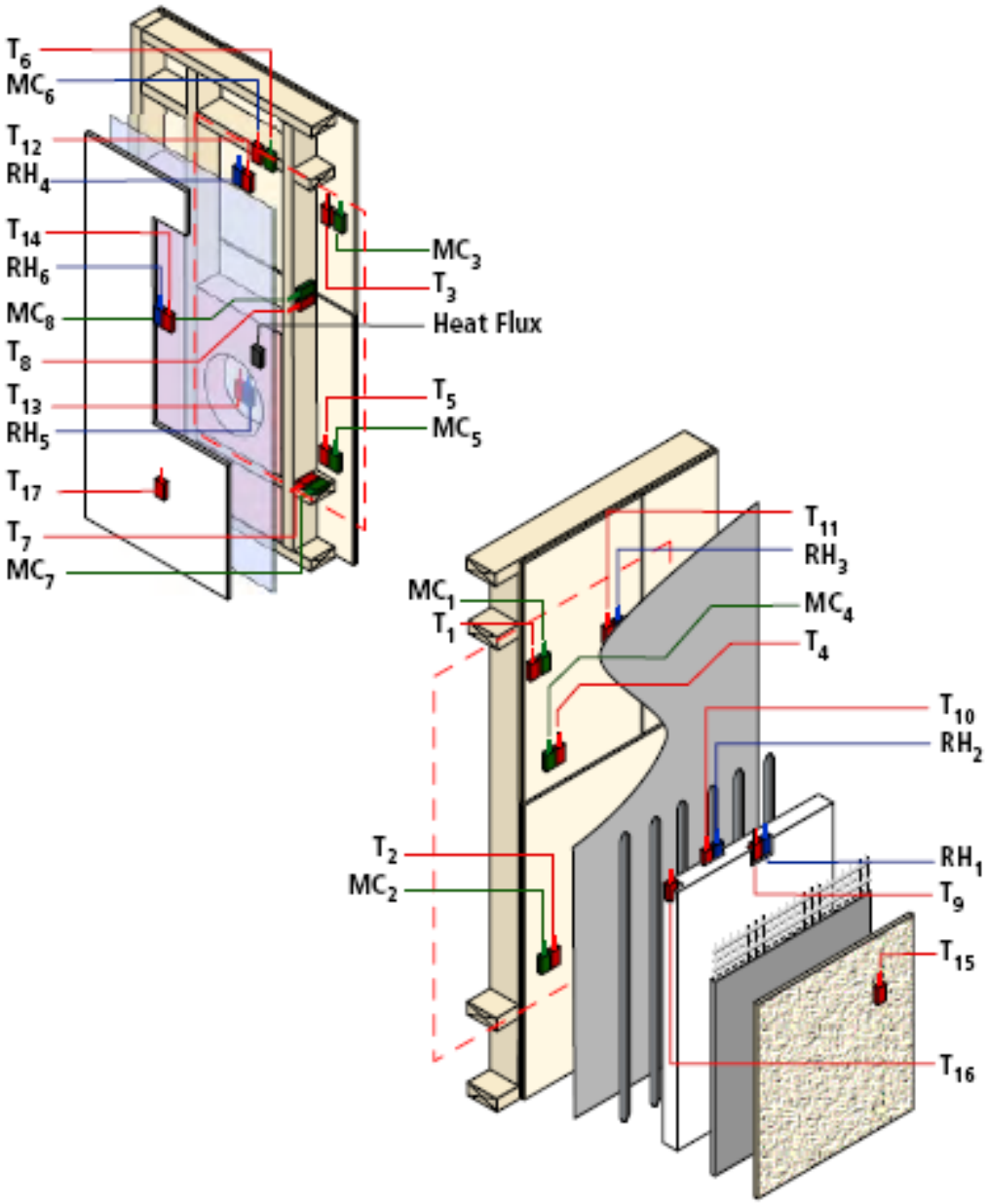
T_6
MC_6
T_{12}
RH_4
T_{14}
RH_6
MC_8
T_8
T_{13}
RH_5
T_{17}
T_7
MC_7
MC_3
T_3
Heat Flux
T_5
MC_5
T_{11}
RH_3
MC_1
T_1
MC_4
T_4
T_{10}
RH_2
T_2
MC_2
RH_1
T_9
T_{15}
T_{16}

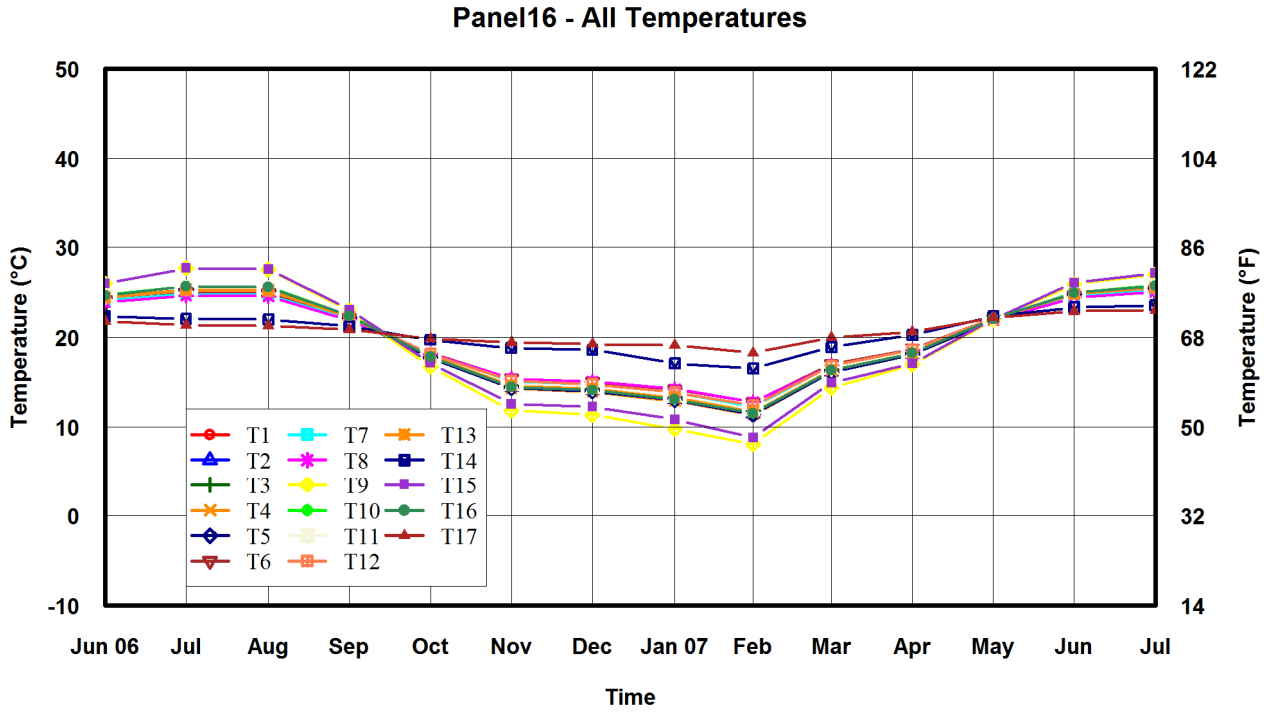

Figure 83: Temperatures in Wall

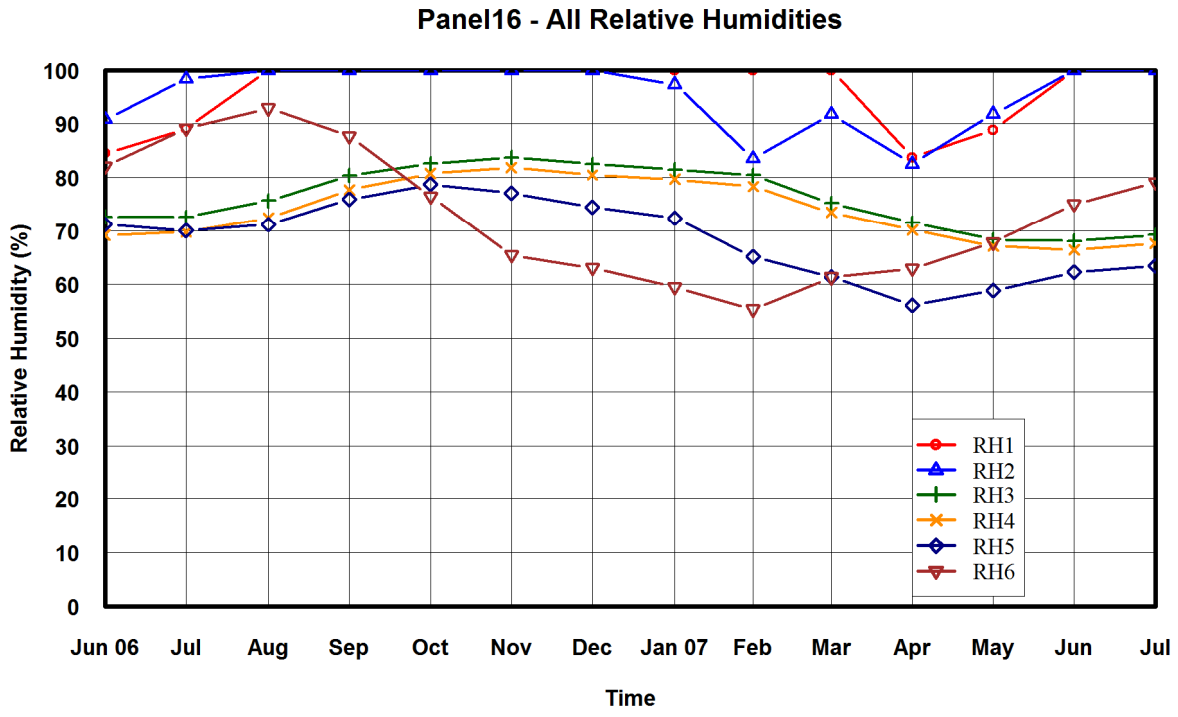

Figure 84: Relative Humidity in Wall

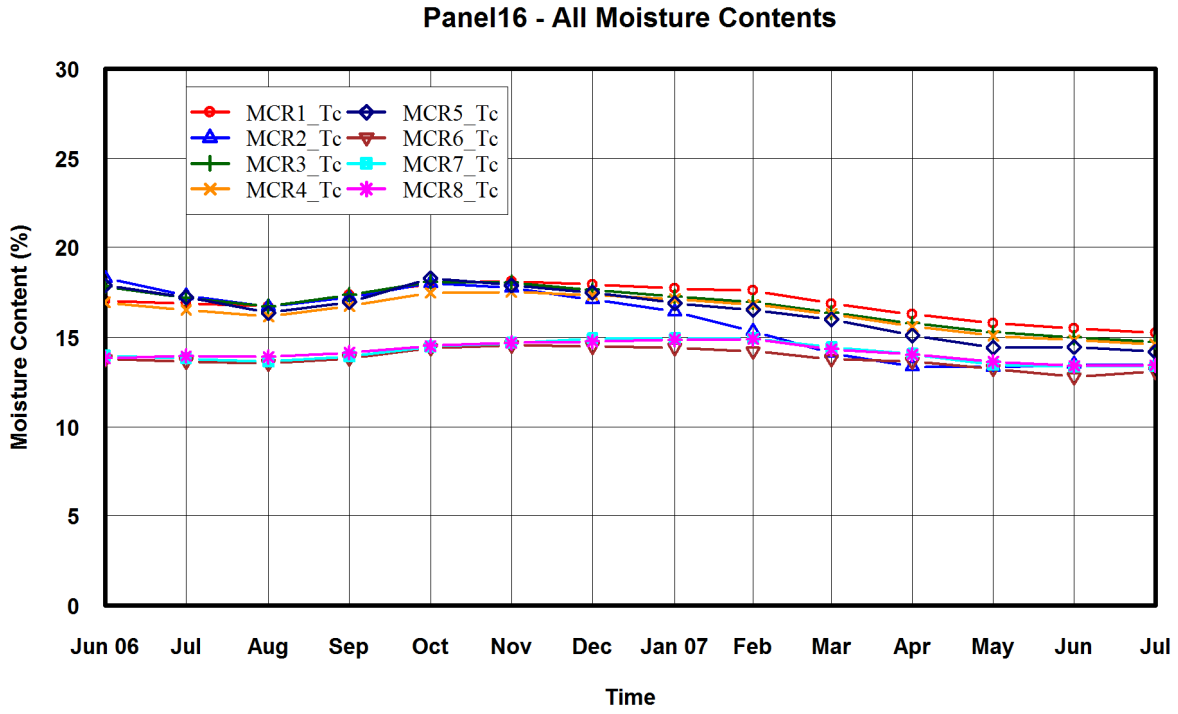

Figure 85: Moisture Content in Wall

Panel 17

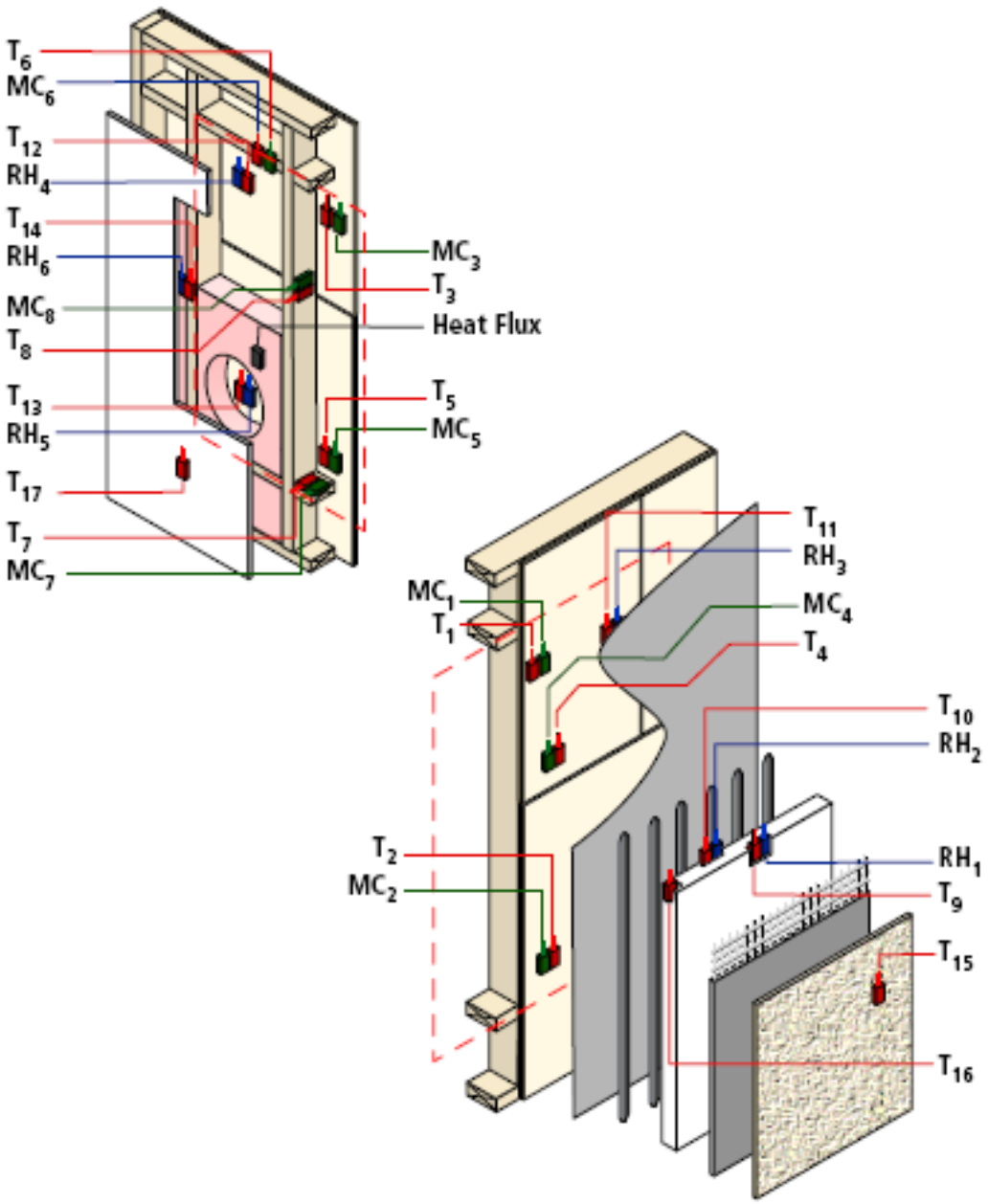
T_6
MC_6
T_{12}
RH_4
T_{14}
RH_6
MC_8
T_8
T_{13}
RH_5
T_{17}
T_7
MC_7
MC_3
T_3
Heat Flux
T_5
MC_5
T_{11}
RH_3
MC_1
T_1
MC_4
T_4
T_{10}
RH_2
T_2
MC_2
RH_1
T_9
T_{15}
T_{16}

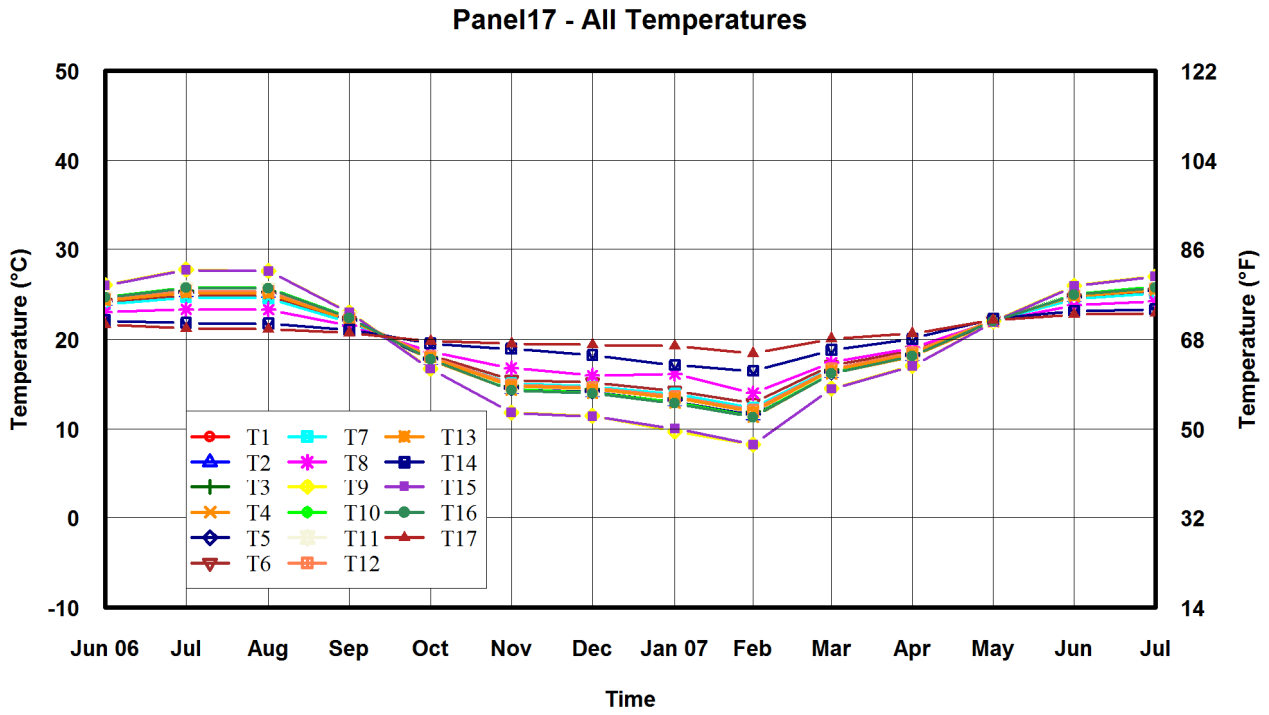

Figure 86: Temperatures in Wall

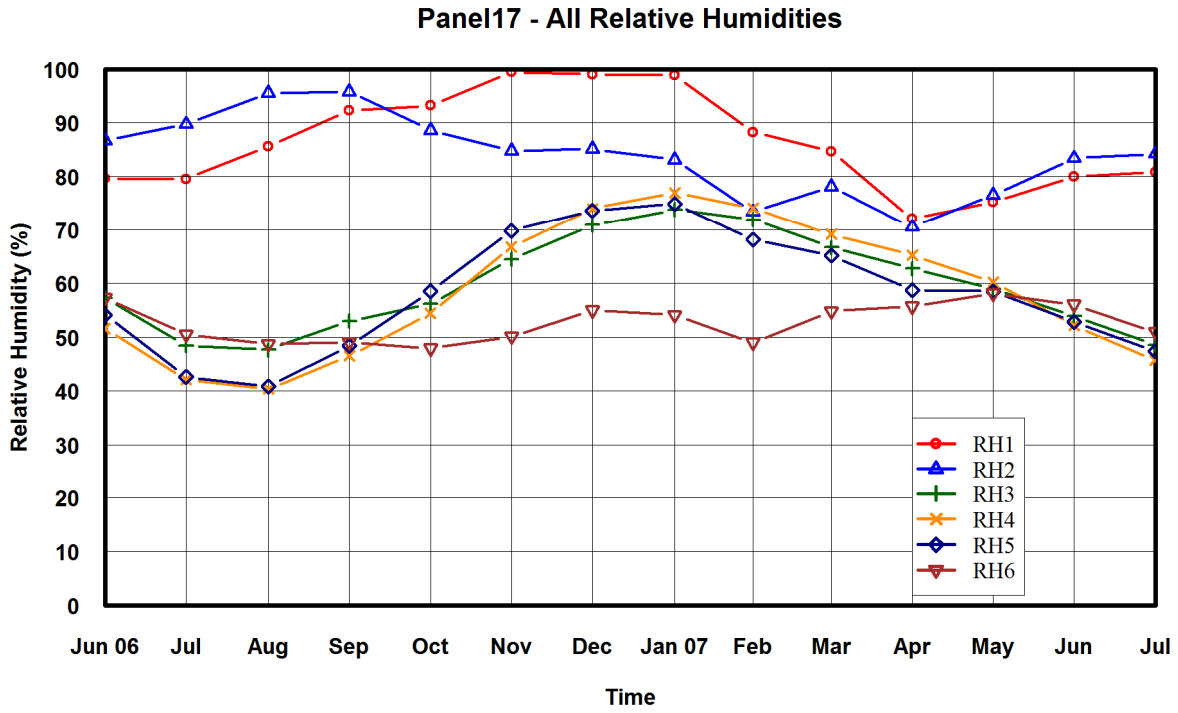

Figure 87: Relative Humidity in Wall

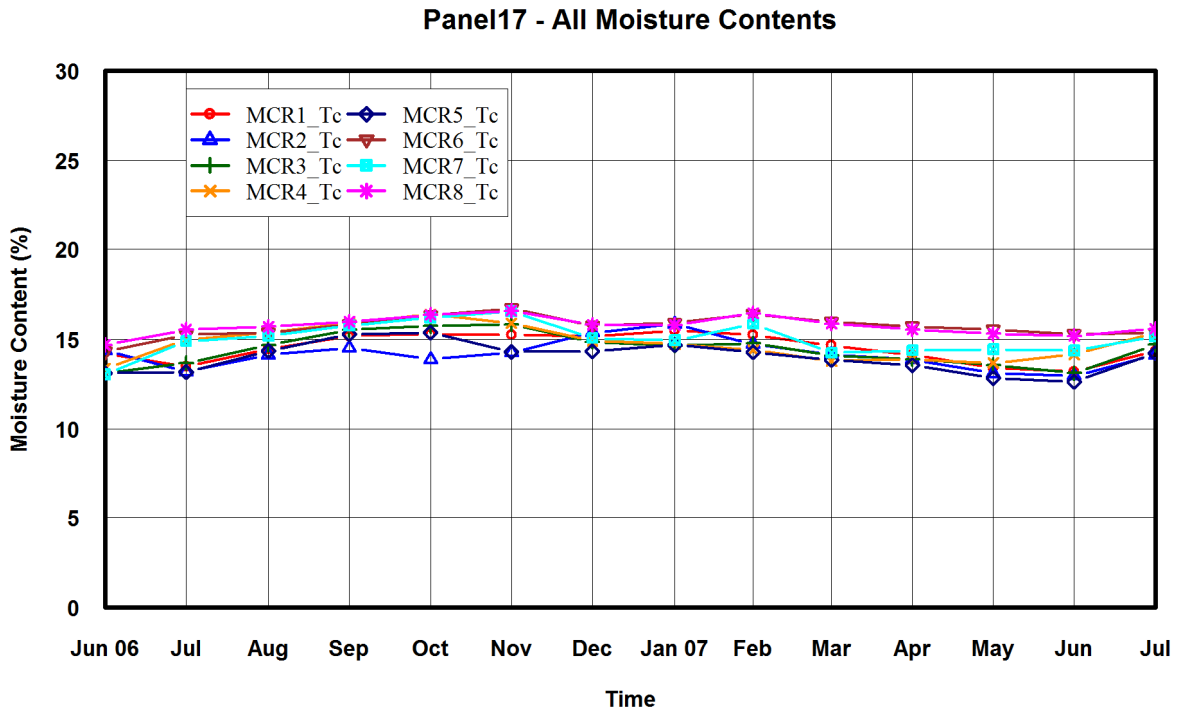

Figure 88: Moisture Content in Wall

Panel 18

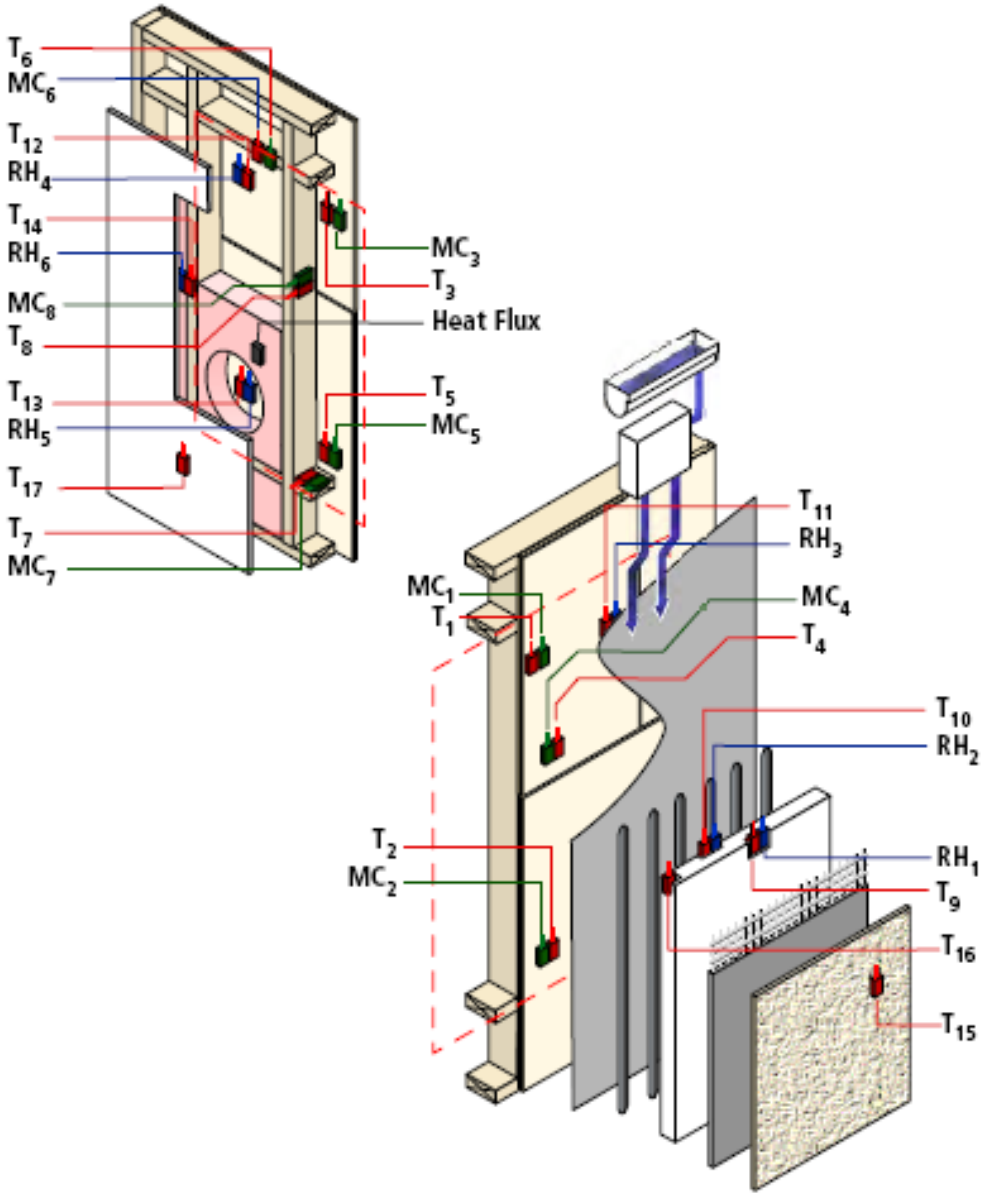
T_6
MC_6
T_{12}
RH_4
T_{14}
RH_6
MC_8
T_8
T_{13}
RH_5
T_{17}
T_7
MC_7
MC_3
T_3
Heat Flux
T_5
MC_5
T_{11}
RH_3
MC_1
T_1
MC_4
T_4
T_{10}
RH_2
T_2
MC_2
RH_1
T_9
T_{16}
T_{15}

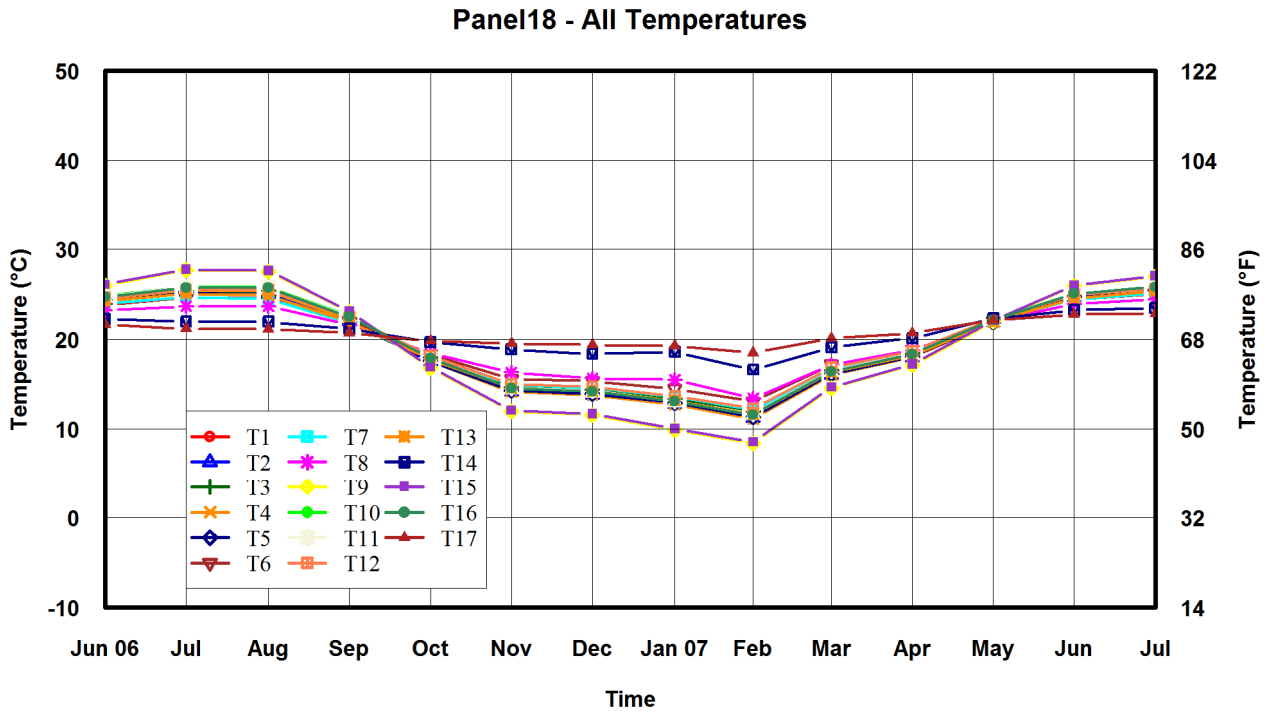

Figure 89: Temperatures in Wall

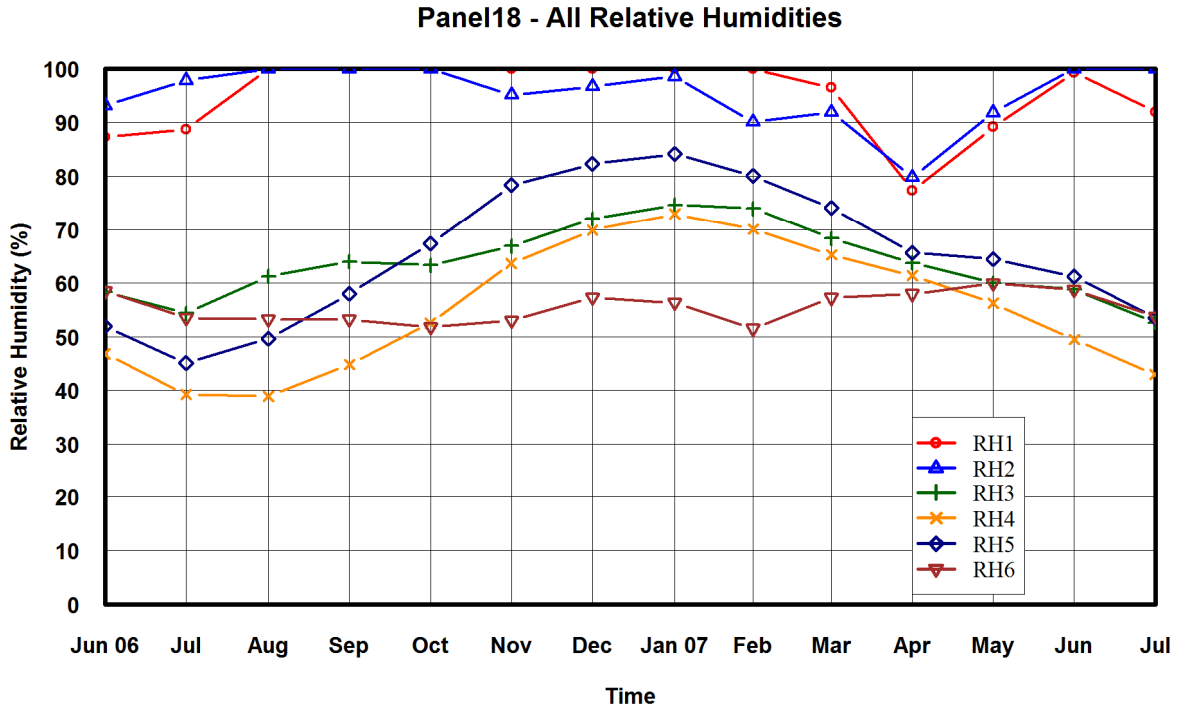

Figure 90: Relative Humidity in Wall

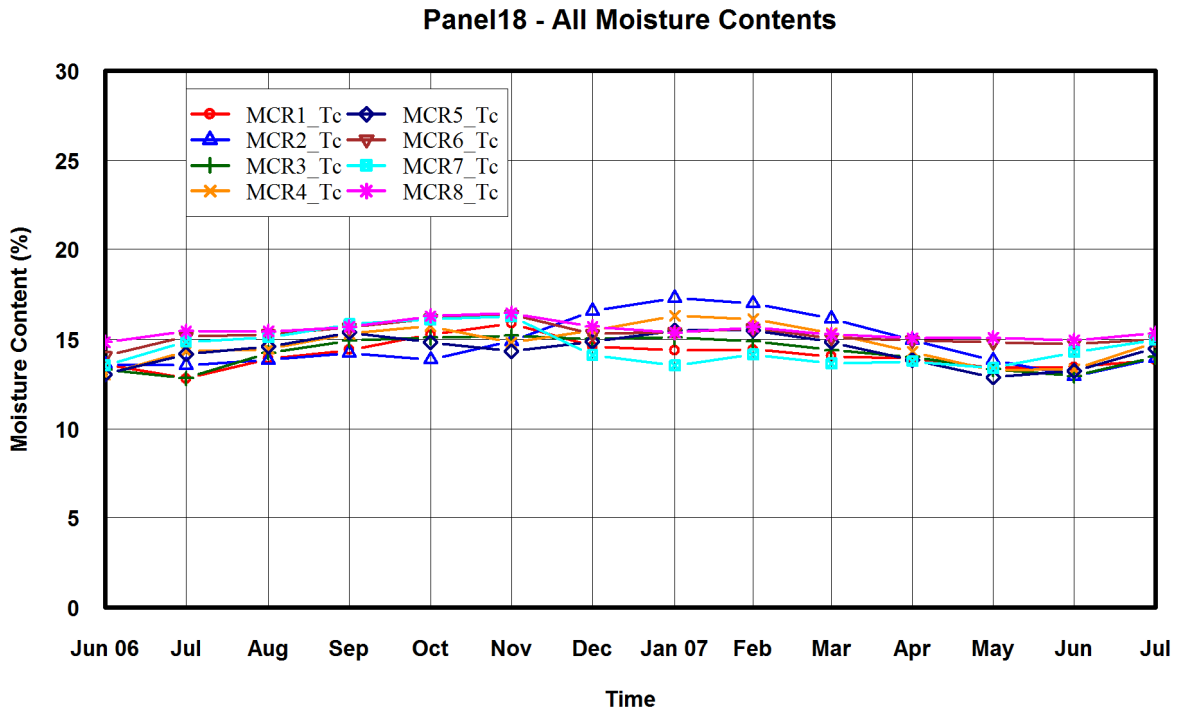

Figure 91: Moisture Content in Wall

Panel 26

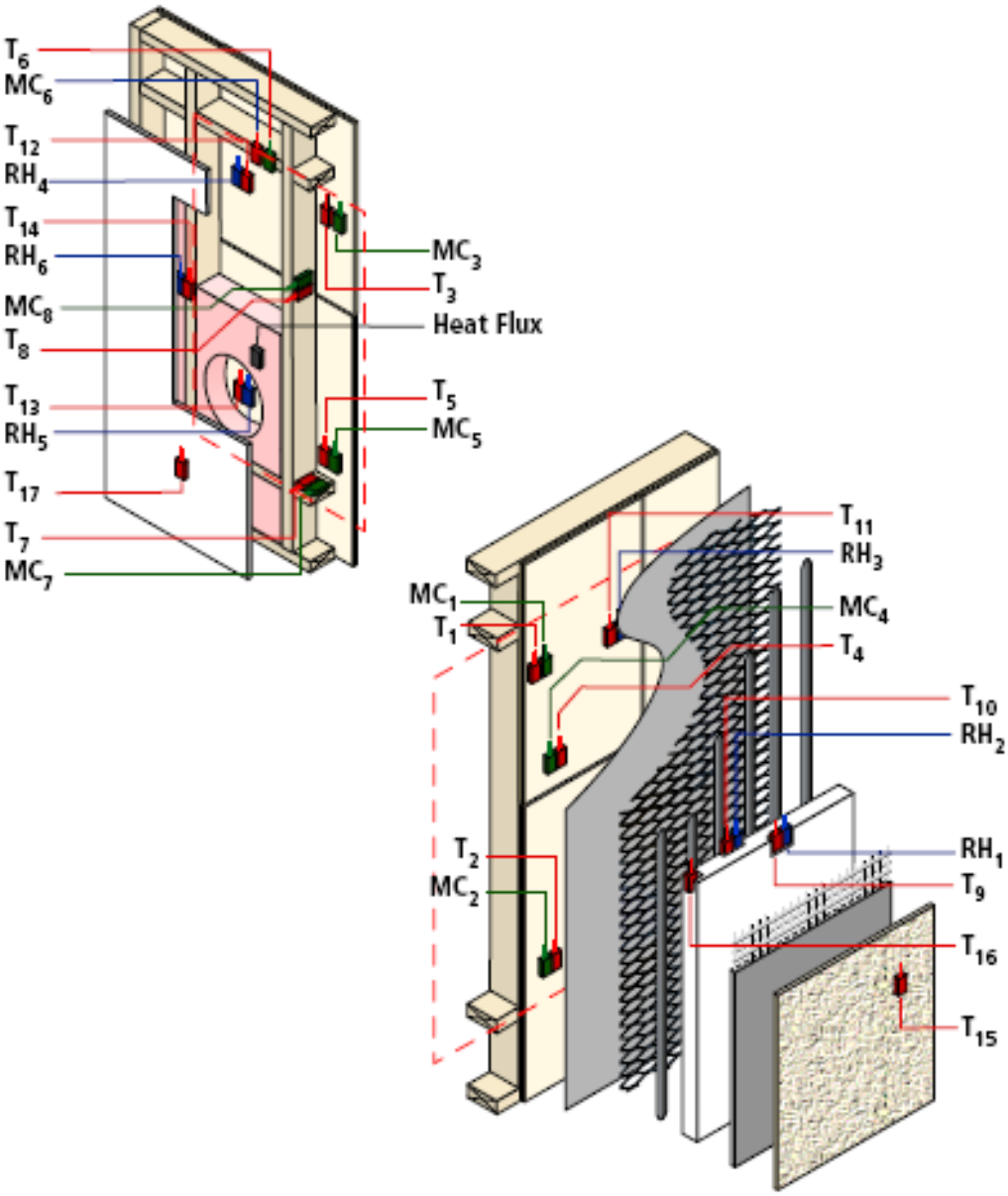
T_6
MC_6
T_{12}
RH_4
T_{14}
RH_6
MC_8
T_8
T_{13}
RH_5
T_{17}
T_7
MC_7
MC_3
T_3
Heat Flux
T_5
MC_5
T_{11}
RH_3
MC_1
T_1
MC_4
T_4
T_{10}
RH_2
T_2
MC_2
RH_1
T_9
T_{16}
T_{15}

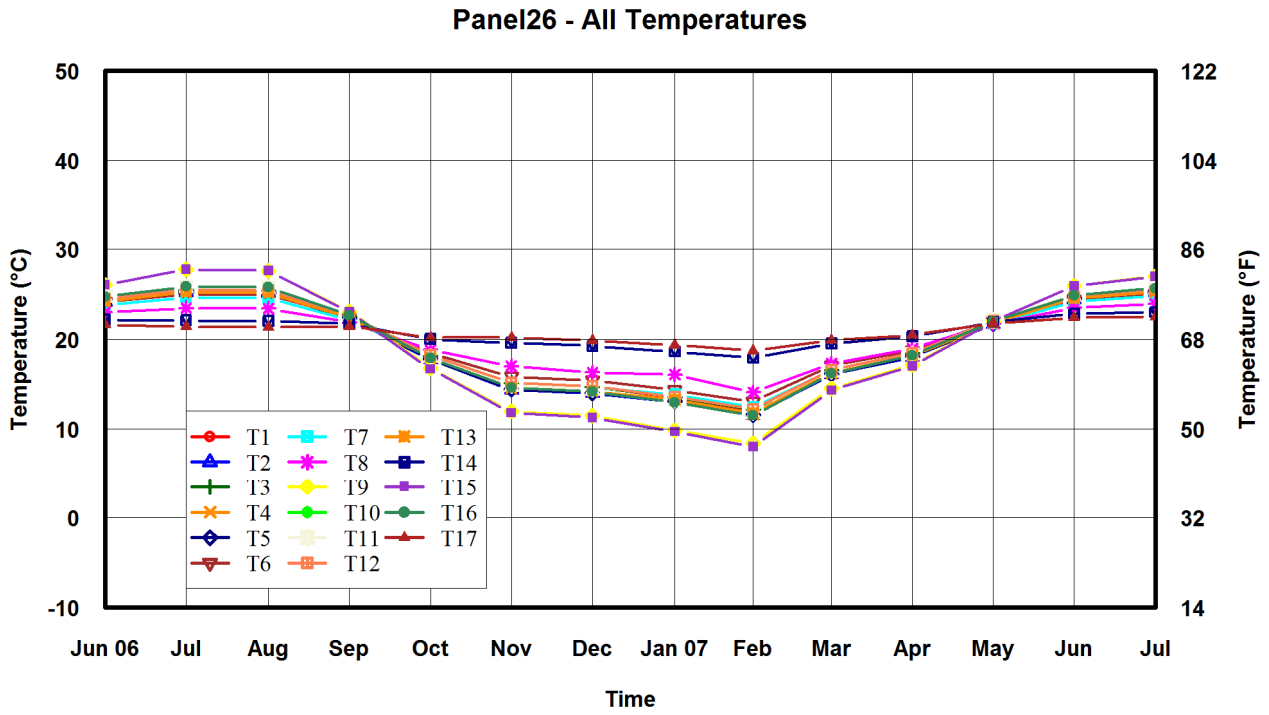

Figure 92: Temperatures in Wall

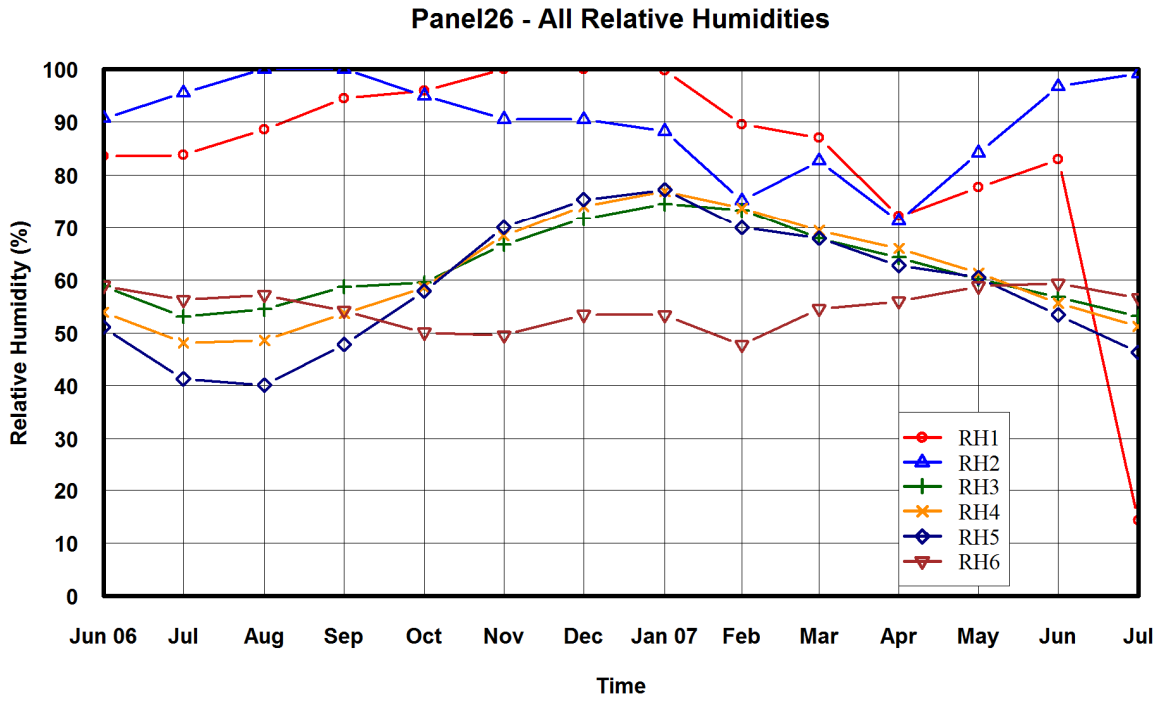

Figure 93: Relative Humidity in Wall

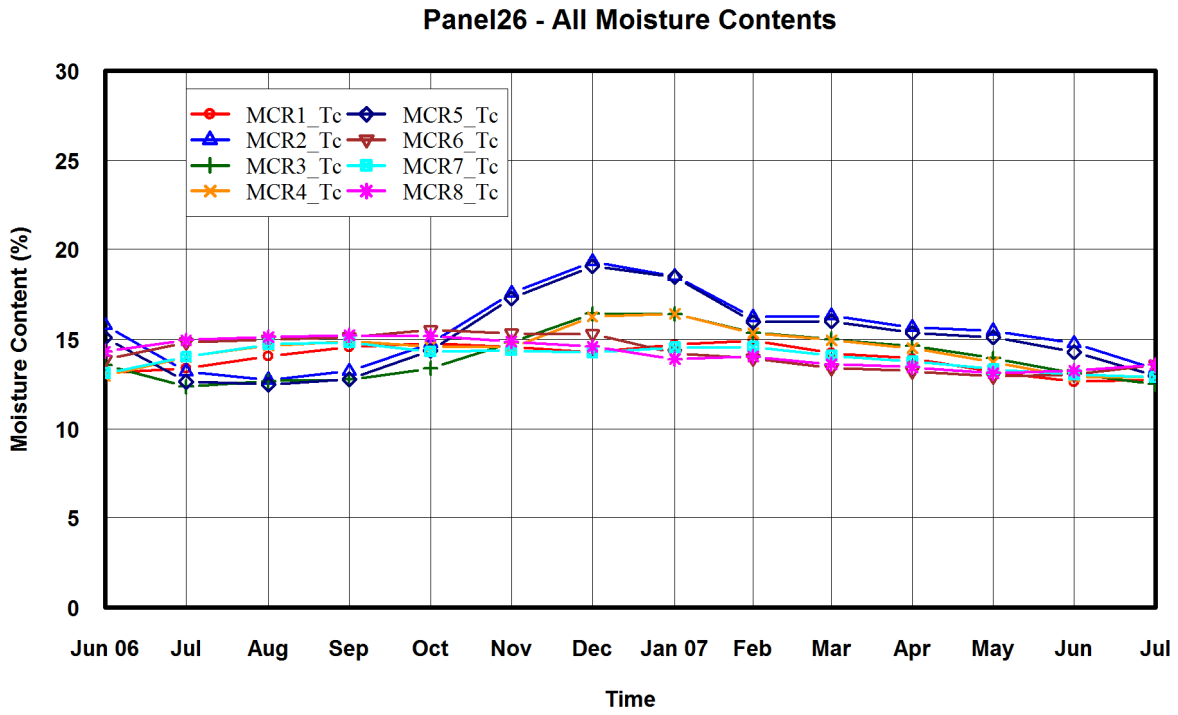

Figure 94: Moisture Content in Wall

Discussions of Results

The Phase II walls also demonstrate cyclic performance in terms of wall wetting and drying as a function of time of year. Some walls showed larger sensitivity to the cyclic loading than other systems.

The relative humidity data provided a significant amount of insight. The accuracy of these sensors is significantly higher than those measuring the moisture content. The results show that substantial differences are present among the various walls. Distinct hygrothermal responses have been found among the various wall systems. From the results the following summaries can be deducted:

- The walls with polyethylene vapor retarders were found to have higher wood moisture content present. The results from this study clearly confirm Phase I results that indicated the use of poly as a vapor retarder is not a good strategy. It is therefore recommended that the interior vapor retarder should be vapor open and not provide a resistance to moisture drying in climates similar to Charleston, SC (hot and humid).
- EIFS walls may employ house wraps as exterior water-resistive barriers, however, moisture movement and accumulation is higher in these wall systems when compared to trowel applied water-resistive barriers. In climates such as Charleston (hot and humid) it becomes critical to employ open vapor retarder strategies (for example high water vapor permeance paint coatings)
- Vertical ribbons of adhesive as drainage layers and air spaces contribute positively towards the hygrothermal performance of the EIFS walls.
- The best performing wall system was found to be the 4 inches EIFS wall without any interior stud insulation (no fiberglass present). This wall outperformed all other walls in terms of moisture.
- Walls with exterior air space ventilation (open top and bottom) provided less hygric differences and in that regard performed better than those walls with just venting (open at bottom only). However these differences are not significant for well constructed wall systems without water penetration present.
- When comparisons between exterior claddings with spun bonded poly-olefin sheathing membranes and liquid applied water-resistive barrier membranes significantly better performance was provided by the EIFS systems utilizing liquid applied water-resistive barrier coatings.
- For all vapor open interior vapor retarder strategies, the worst wall in terms of hygrothermal performance was the stucco system (3-coat and 1-coat), followed by the brick clad systems, and then the cementitious cladding. It should be noted that a very different brick was employed in Phase II of the study than in Phase I (Phase I brick was a glazed type brick whereas Phase II was more representative of actual use).

Conclusions:

This report provides performance data on 15 walls systems that have been monitored for a period of 1 year and 1 month (June 1, 2006 through July 30, 2007).

The monitored results are displayed in terms of monthly averaged data and provide insight on the heat and moisture performance of the walls for a 15 month period. A number of parameters have been investigated such as, the effect of water-resistive membrane systems (spun-bonded polyolefin, liquid applied membranes, 60 minute building papers), the effect of cladding systems (EIFS, Brick, Stucco), the effect of ventilation type (unvented, vented and ventilation), effect of insulation placement (exterior only or exterior and interior), the impact of water penetration in the form of flaws added to various walls, the effect of wall orientation and the effect of interior vapor control strategies.

The results indicate that the most critical parameters found in this hygrothermal study are:

a) All walls performed satisfactory, with some systems performing at borderline conditions during small periods of the year.
b) Stucco and Brick wall systems tend to accumulate more moisture.
c) The type of interior vapor control strategy (vapor open must be used in all walls examined in this study).
d) Insulation placement is more beneficial when installed towards the exterior.
e) Trowel applied liquid membranes outperform the spun-bonded polyolefin membranes in this study.
f) Ventilation provides a beneficial effect on the performance of the walls investigated. Vented systems are also beneficial.
g) The effects of water penetration are more pronounced in cladding with absorptive capacities than EIFS walls.
h) The impact of orientation is substantial. Walls oriented northwest had substantially higher relative humidites than those positioned on the southeast.

APPENDIX A

Material Property Measurements

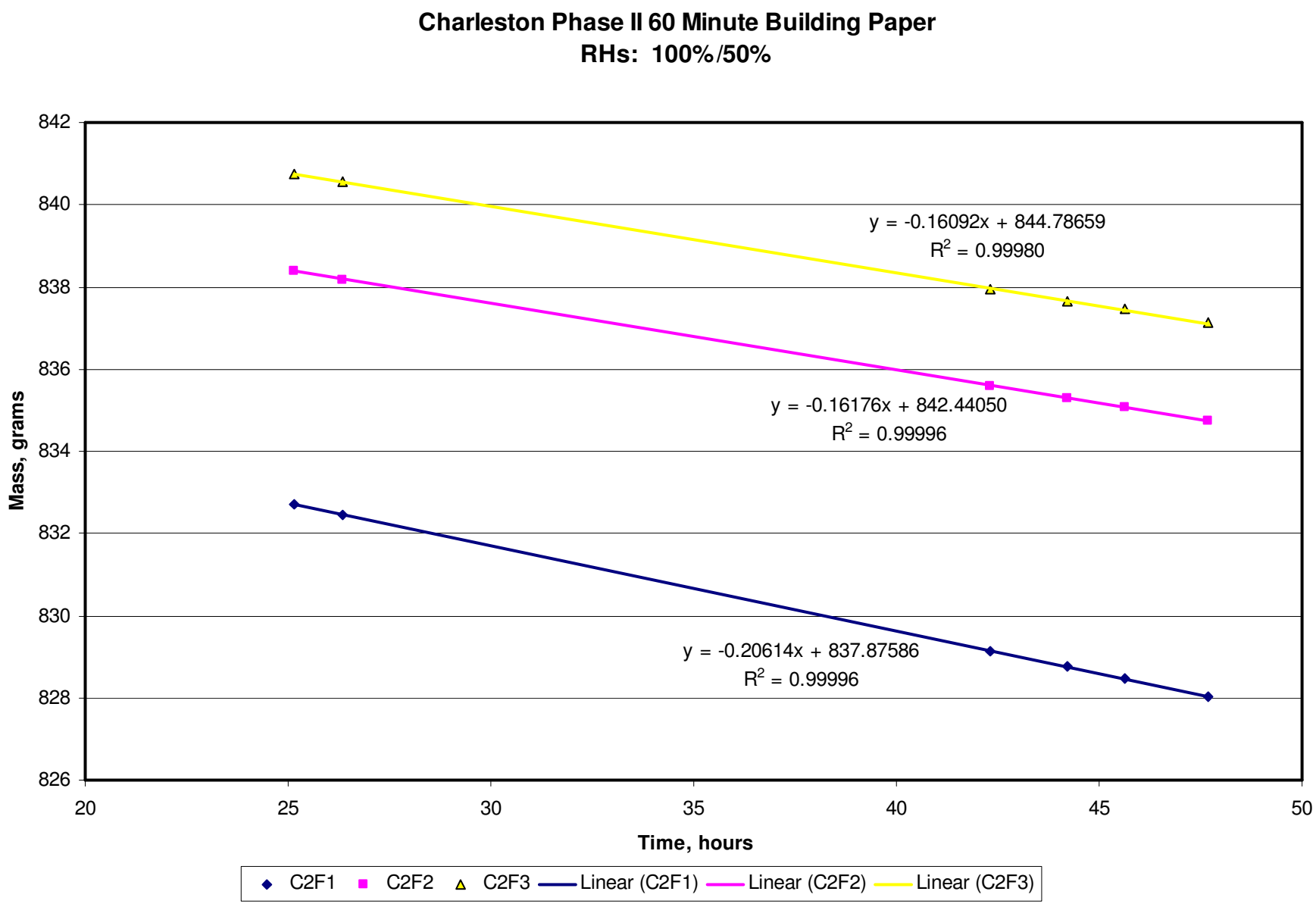
Charleston Phase II 60 Minute Building Paper
RHs: 100%/50%
Mass, grams
Time, hours
842
840
838
836
834
832
830
828
826
20
25
30
35
40
45
50
y = -0.16092x + 844.78659
R2 = 0.99980
y = -0.16176x + 842.44050
R2 = 0.99996
y = -0.20614x + 837.87586
R2 = 0.99996
C2F1
C2F2
C2F3
Linear (C2F1)
Linear (C2F2)
Linear (C2F3)

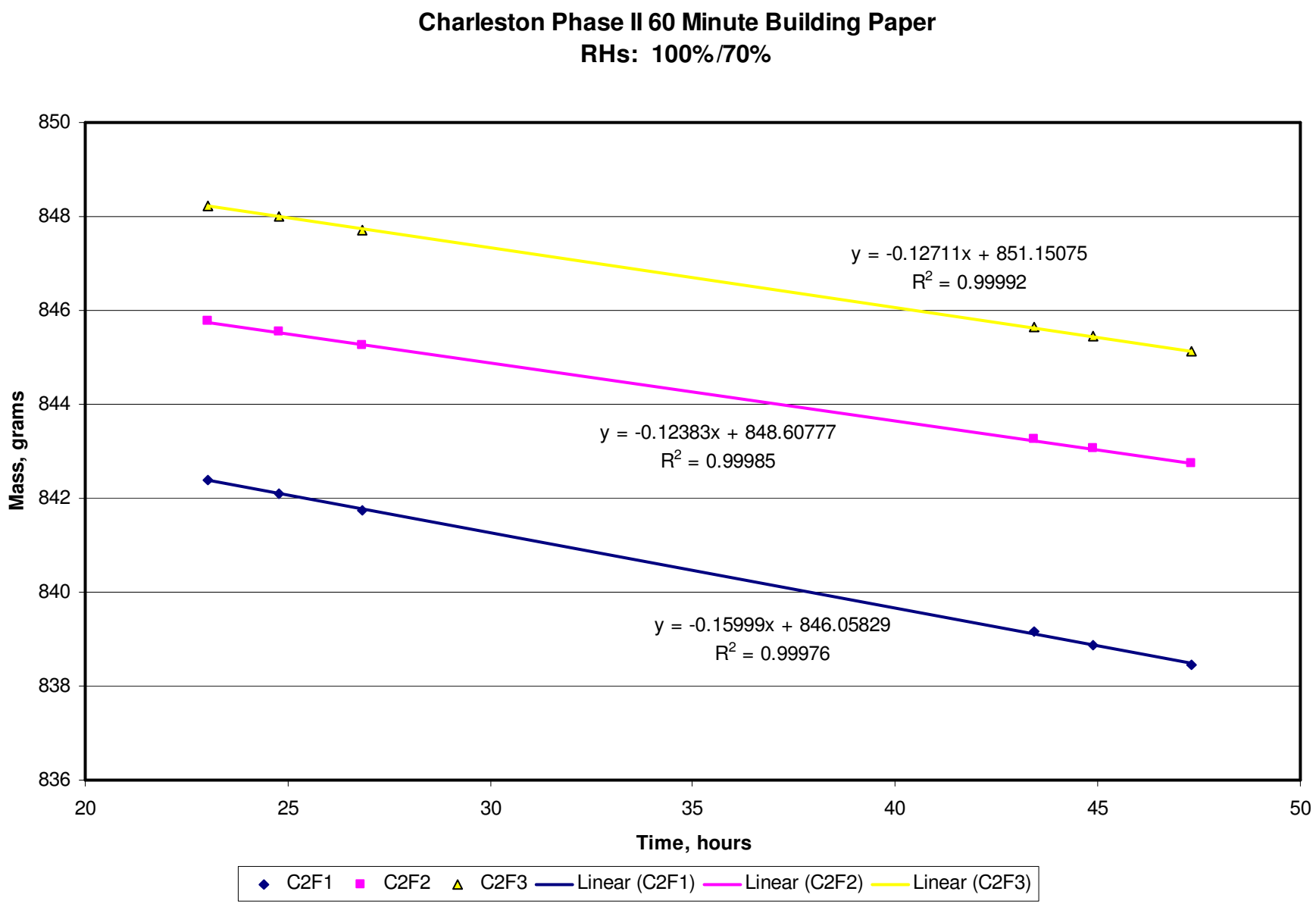
Charleston Phase II 60 Minute Building Paper
RHs: 100%/70%
850
848
846
844
842
840
838
836
Mass, grams
20
25
30
35
40
45
50
Time, hours
y = -0.12711x + 851.15075
R2 = 0.99992
y = -0.12383x + 848.60777
R2 = 0.99985
y = -0.15999x + 846.05829
R2 = 0.99976
C2F1
C2F2
C2F3
Linear (C2F1)
Linear (C2F2)
Linear (C2F3)

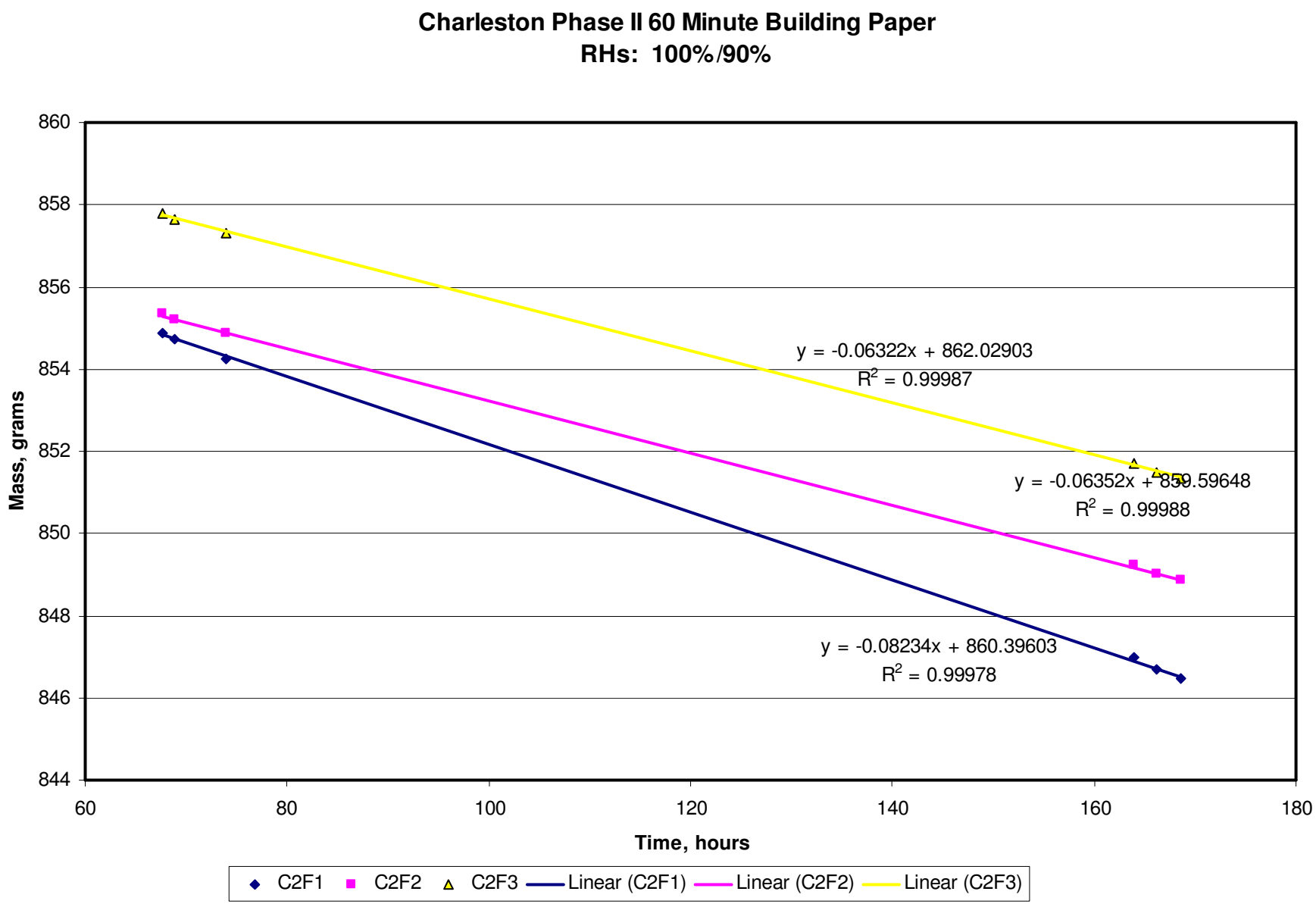
Charleston Phase II 60 Minute Building Paper
RHs: 100%/90%
Mass, grams
Time, hours
860
858
856
854
852
850
848
846
844
60
80
100
120
140
160
180
y = -0.06322x + 862.02903
R2 = 0.99987
y = -0.06352x + 859.59648
R2 = 0.99988
y = -0.08234x + 860.39603
R2 = 0.99978
C2F1
C2F2
C2F3
Linear (C2F1)
Linear (C2F2)
Linear (C2F3)

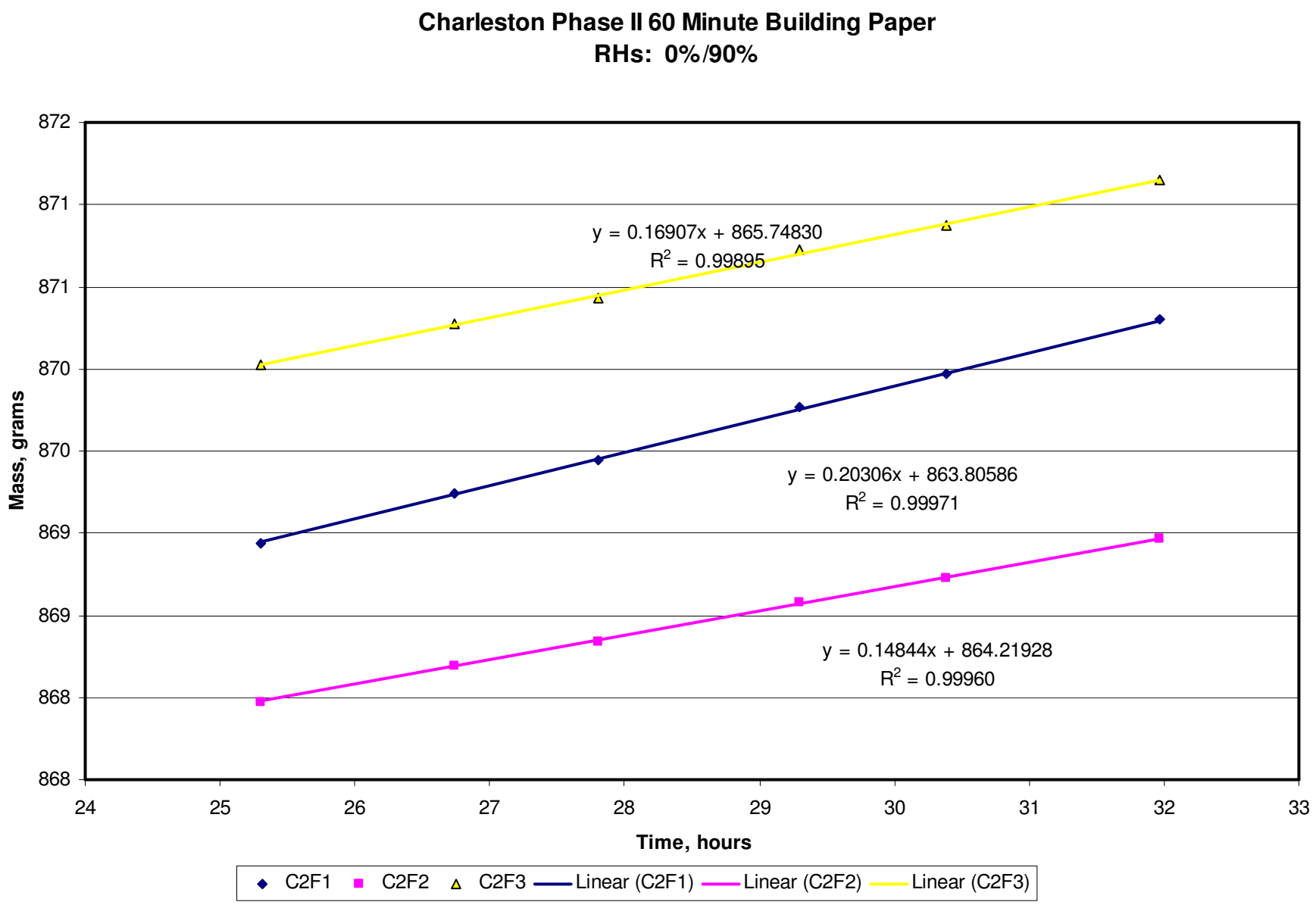
Charleston Phase II 60 Minute Building Paper
RHs: 0%/90%
y = 0.16907x + 865.74830
R2 = 0.99895
y = 0.20306x + 863.80586
R2 = 0.99971
y = 0.14844x + 864.21928
R2 = 0.99960
Mass, grams
Time, hours
872
871
871
870
870
869
869
868
868
24
25
26
27
28
29
30
31
32
33
C2F1
C2F2
C2F3
Linear (C2F1)
Linear (C2F2)
Linear (C2F3)

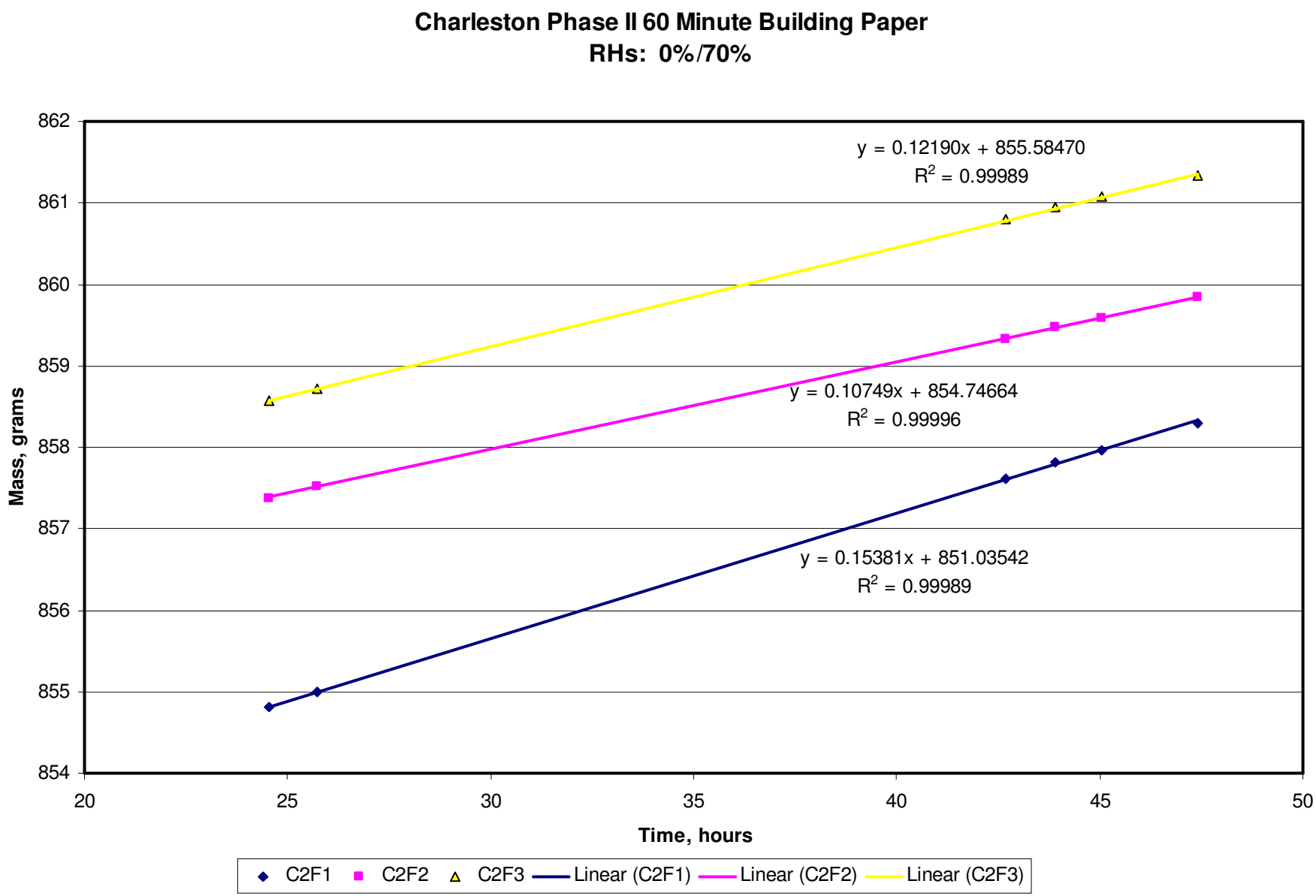
Charleston Phase II 60 Minute Building Paper
RHs: 0%/70%
y = 0.12190x + 855.58470
R2 = 0.99989
y = 0.10749x + 854.74664
R2 = 0.99996
y = 0.15381x + 851.03542
R2 = 0.99989
Mass, grams
Time, hours
862
861
860
859
858
857
856
855
854
20
25
30
35
40
45
50
C2F1
C2F2
C2F3
Linear (C2F1)
Linear (C2F2)
Linear (C2F3)

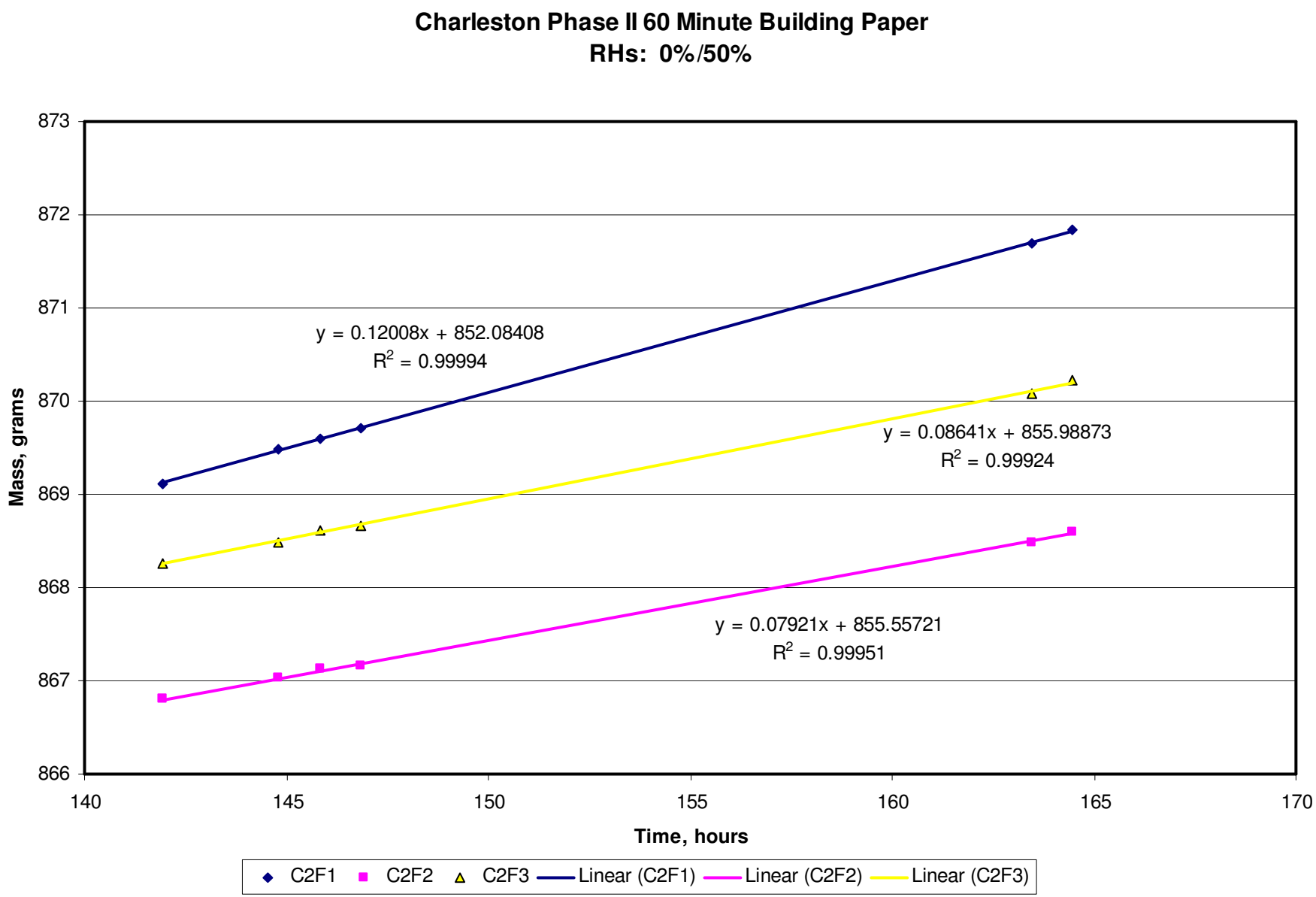
Charleston Phase II 60 Minute Building Paper
RHs: 0%/50%
Mass, grams
Time, hours
873
872
871
870
869
868
867
866
140
145
150
155
160
165
170
y = 0.12008x + 852.08408
R2 = 0.99994
y = 0.08641x + 855.98873
R2 = 0.99924
y = 0.07921x + 855.55721
R2 = 0.99951
C2F1
C2F2
C2F3
Linear (C2F1)
Linear (C2F2)
Linear (C2F3)

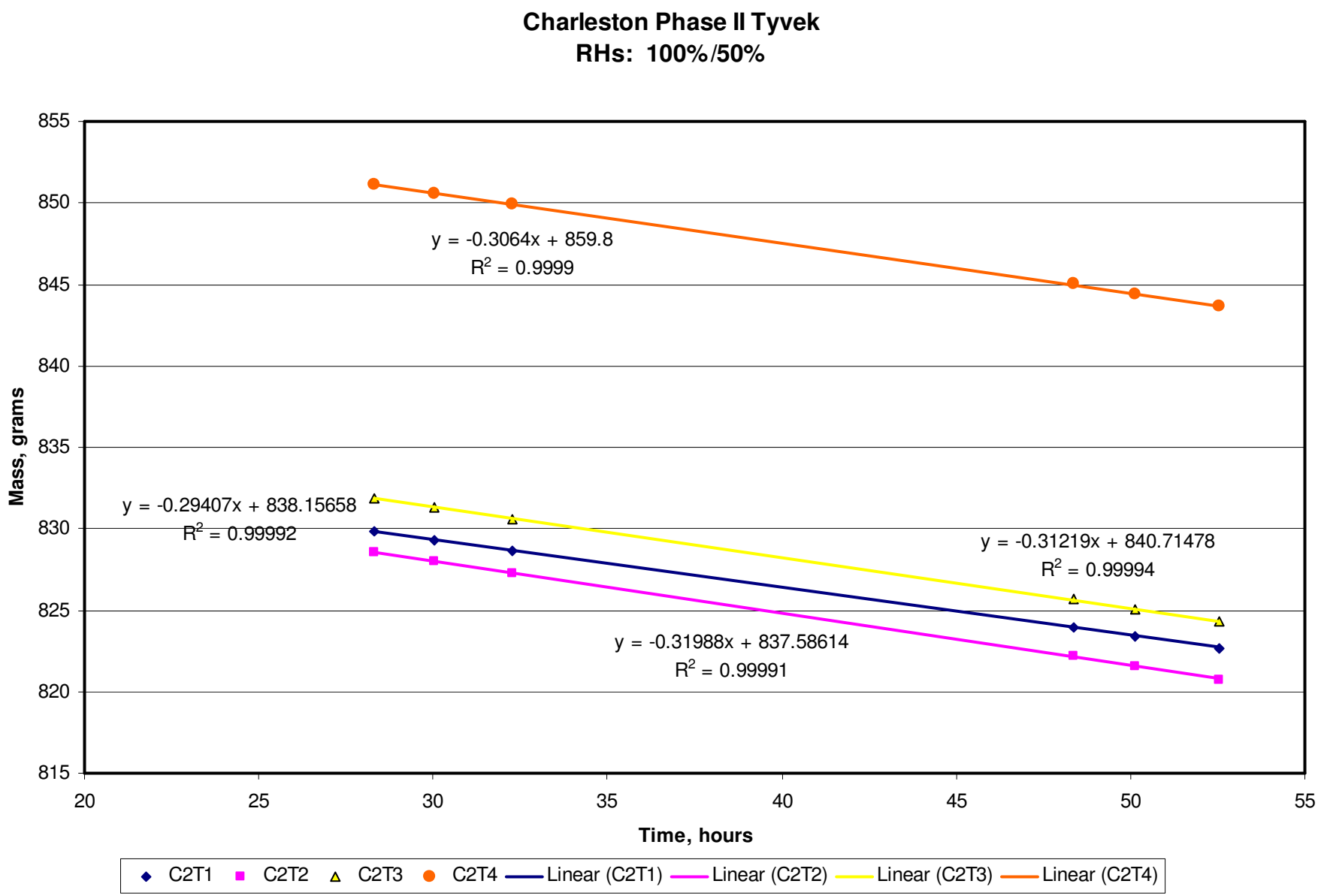
Charleston Phase II Tyvek
RHs: 100%/50%
855
850
845
840
835
830
825
820
815
Mass, grams
20
25
30
35
40
45
50
55
Time, hours
y = -0.3064x + 859.8
R2 = 0.9999
y = -0.29407x + 838.15658
R2 = 0.99992
y = -0.31219x + 840.71478
R2 = 0.99994
y = -0.31988x + 837.58614
R2 = 0.99991
C2T1
C2T2
C2T3
C2T4
Linear (C2T1)
Linear (C2T2)
Linear (C2T3)
Linear (C2T4)

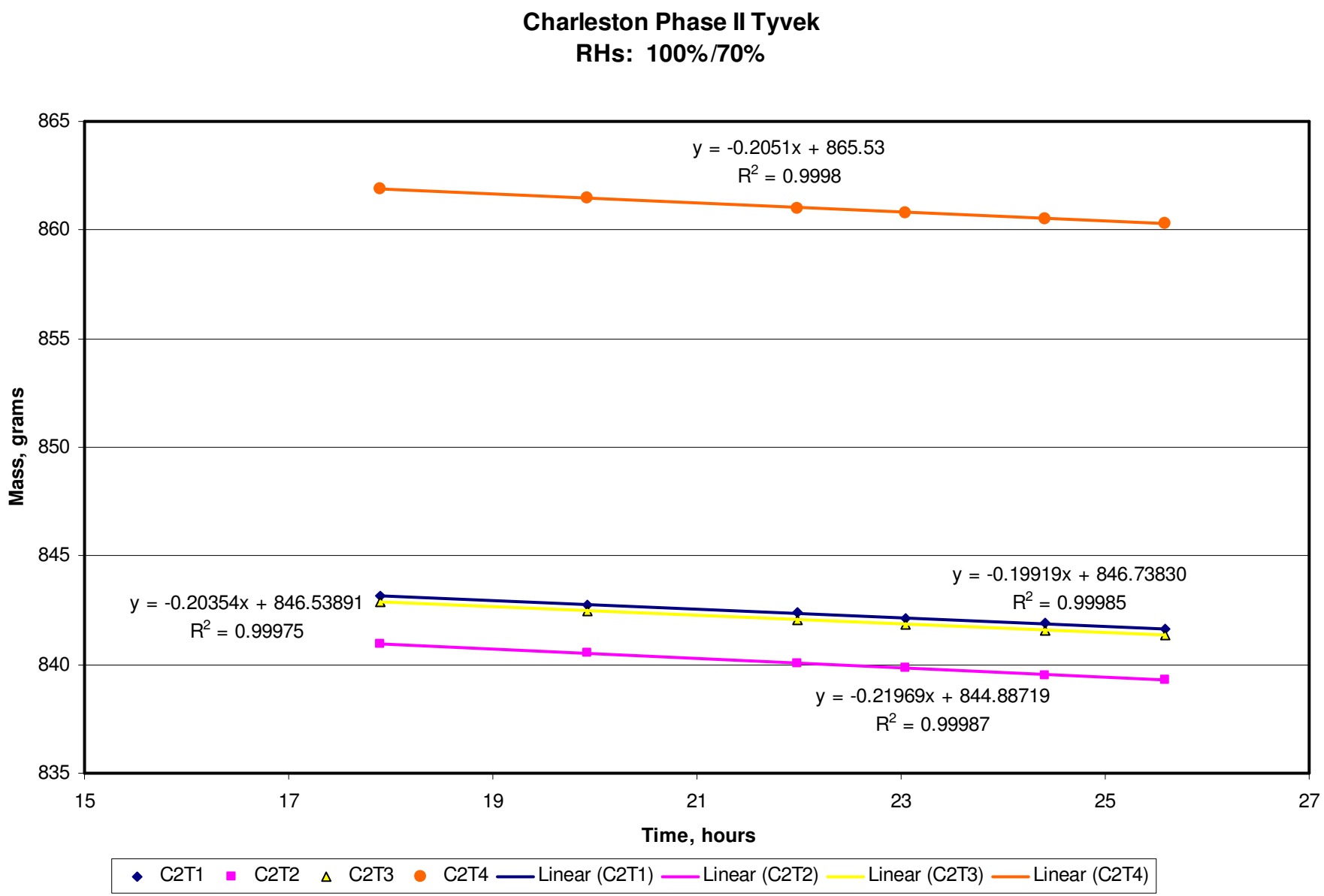
Charleston Phase II Tyvek
RHs: 100%/70%
y = -0.2051x + 865.53
R2 = 0.9998
y = -0.19919x + 846.73830
R2 = 0.99985
y = -0.20354x + 846.53891
R2 = 0.99975
y = -0.21969x + 844.88719
R2 = 0.99987
Mass, grams
865
860
855
850
845
840
835
15
17
19
21
23
25
27
Time, hours
C2T1
C2T2
C2T3
C2T4
Linear (C2T1)
Linear (C2T2)
Linear (C2T3)
Linear (C2T4)

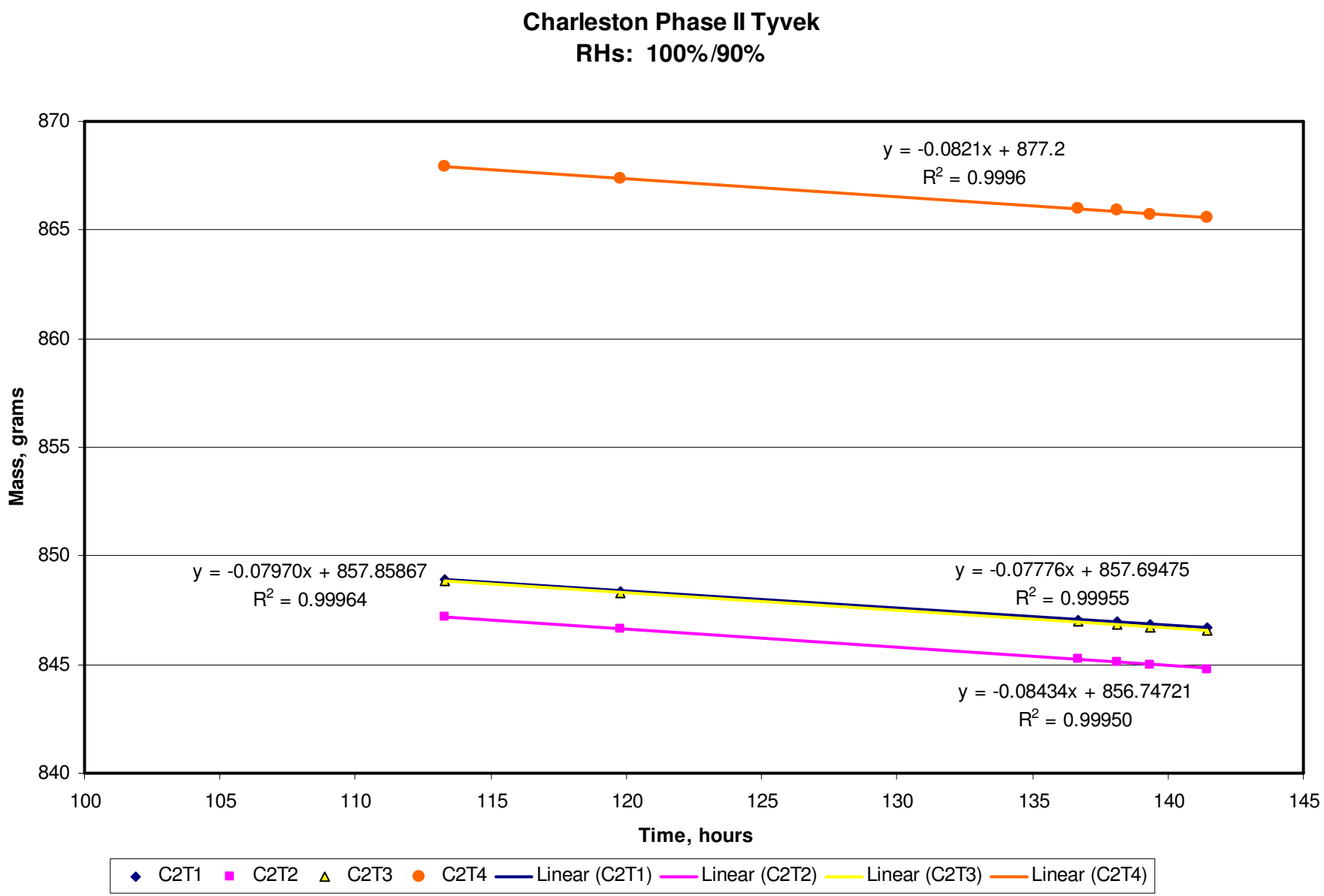
Charleston Phase II Tyvek
RHs: 100%/90%
y = -0.0821x + 877.2
R2 = 0.9996
y = -0.07970x + 857.85867
R2 = 0.99964
y = -0.07776x + 857.69475
R2 = 0.99955
y = -0.08434x + 856.74721
R2 = 0.99950
Mass, grams
870
865
860
855
850
845
840
100
105
110
115
120
125
130
135
140
145
Time, hours
C2T1
C2T2
C2T3
C2T4
Linear (C2T1)
Linear (C2T2)
Linear (C2T3)
Linear (C2T4)

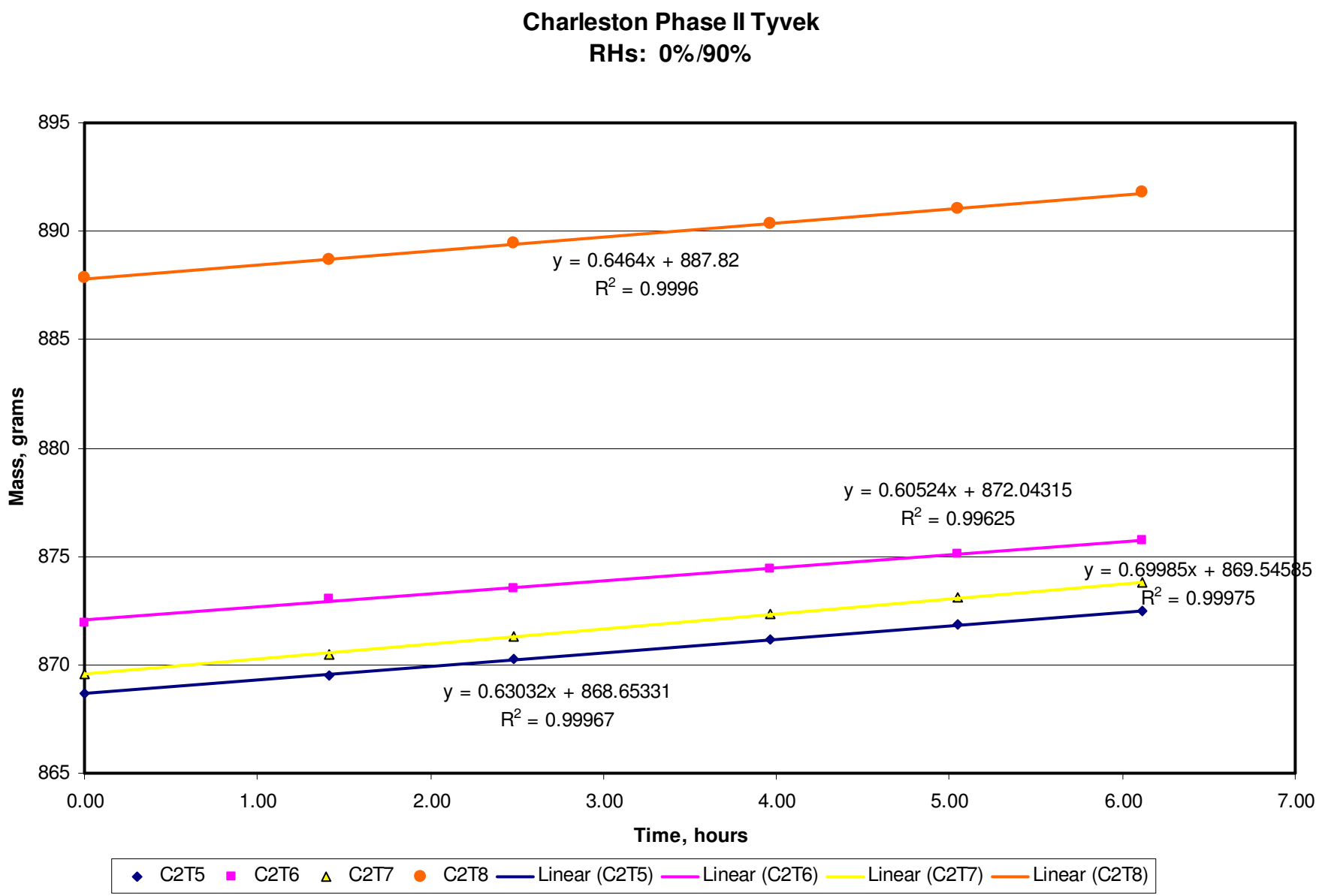
Charleston Phase II Tyvek
RHs: 0%/90%
Mass, grams
Time, hours
895
890
885
880
875
870
865
0.00
1.00
2.00
3.00
4.00
5.00
6.00
7.00
y = 0.6464x + 887.82
R2 = 0.9996
y = 0.60524x + 872.04315
R2 = 0.99625
y = 0.69985x + 869.54585
R2 = 0.99975
y = 0.63032x + 868.65331
R2 = 0.99967
C2T5
C2T6
C2T7
C2T8
Linear (C2T5)
Linear (C2T6)
Linear (C2T7)
Linear (C2T8)

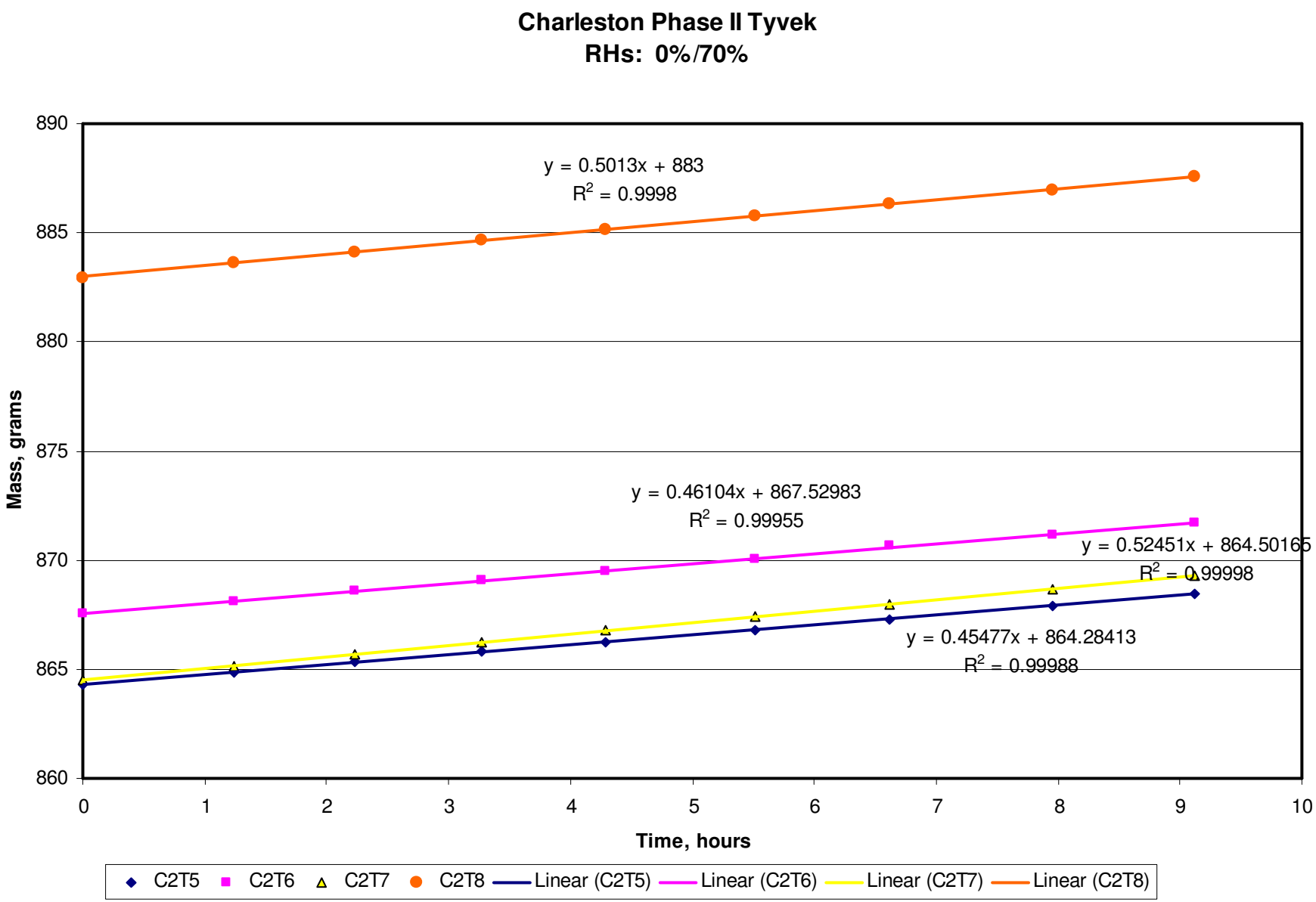
Charleston Phase II Tyvek
RHs: 0%/70%
y = 0.5013x + 883
R2 = 0.9998
y = 0.46104x + 867.52983
R2 = 0.99955
y = 0.52451x + 864.50165
R2 = 0.99998
y = 0.45477x + 864.28413
R2 = 0.99988
Mass, grams
Time, hours
890
885
880
875
870
865
860
0
1
2
3
4
5
6
7
8
9
10
C2T5
C2T6
C2T7
C2T8
Linear (C2T5)
Linear (C2T6)
Linear (C2T7)
Linear (C2T8)

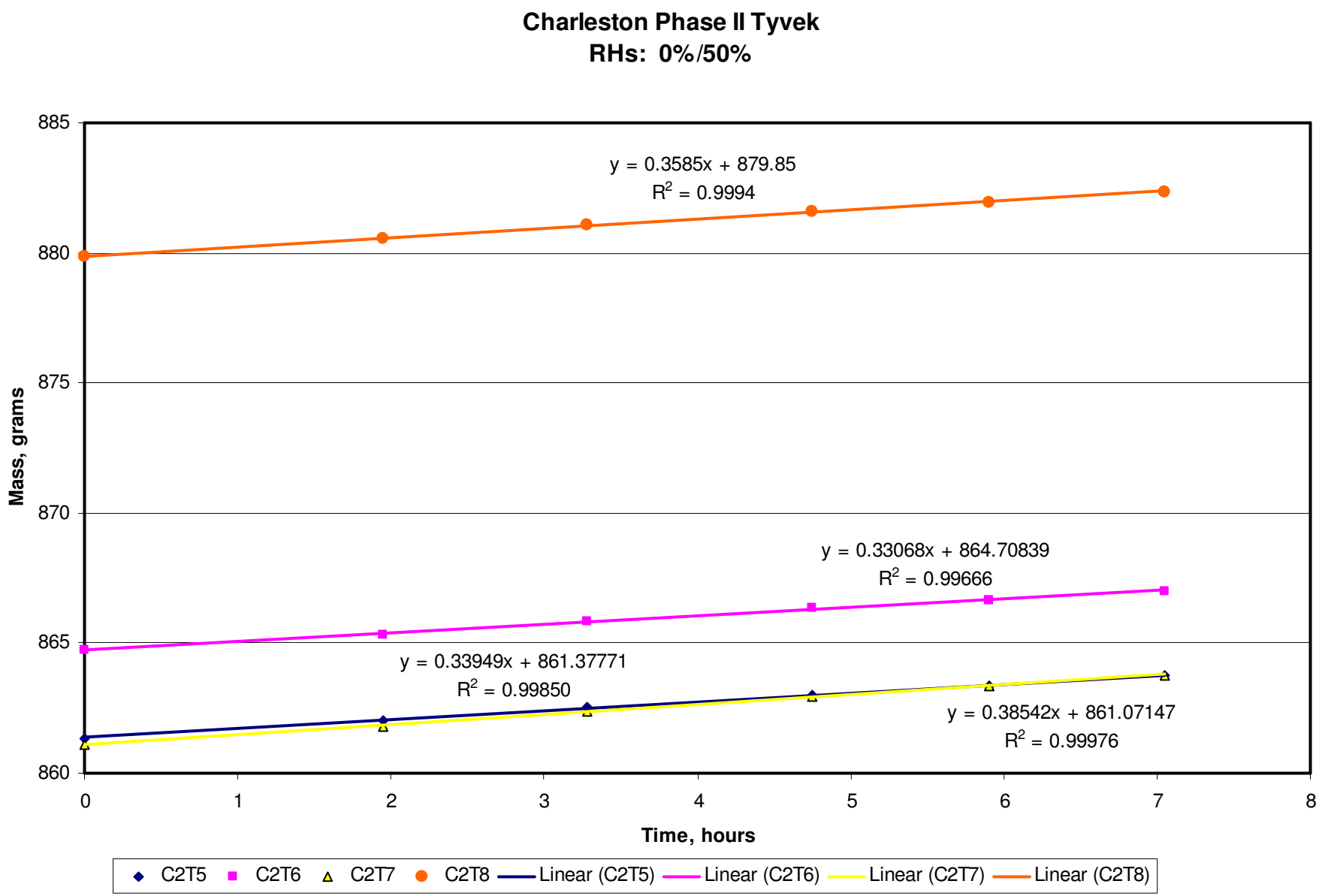
Charleston Phase II Tyvek
RHs: 0%/50%
y = 0.3585x + 879.85
R2 = 0.9994
y = 0.33068x + 864.70839
R2 = 0.99666
y = 0.33949x + 861.37771
R2 = 0.99850
y = 0.38542x + 861.07147
R2 = 0.99976
Mass, grams
885
880
875
870
865
860
0
1
2
3
4
5
6
7
8
Time, hours
C2T5
C2T6
C2T7
C2T8
Linear (C2T5)
Linear (C2T6)
Linear (C2T7)
Linear (C2T8)

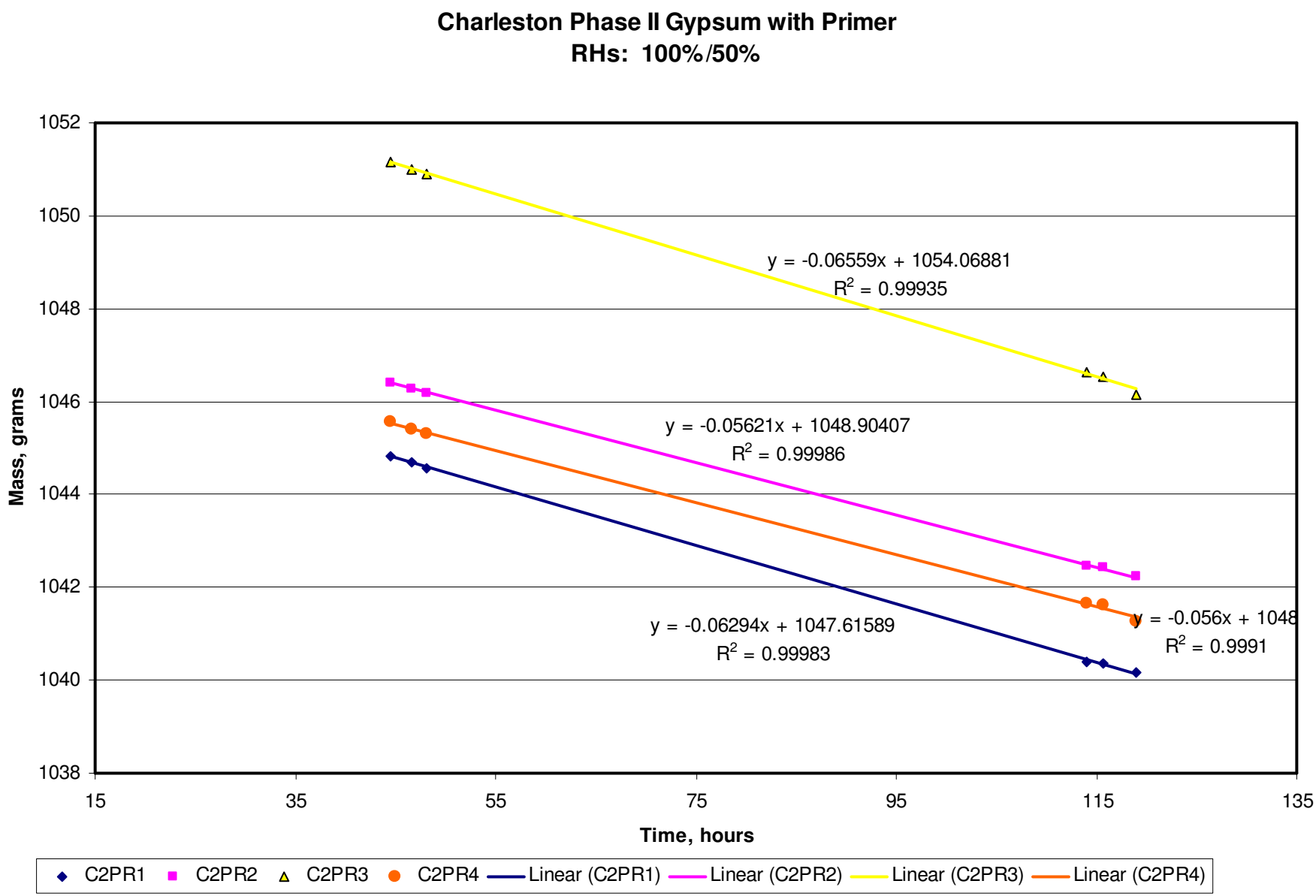
Charleston Phase II Gypsum with Primer
RHs: 100%/50%
Mass, grams
Time, hours
1052
1050
1048
1046
1044
1042
1040
1038
15
35
55
75
95
115
135
y = -0.06559x + 1054.06881
R2 = 0.99935
y = -0.05621x + 1048.90407
R2 = 0.99986
y = -0.06294x + 1047.61589
R2 = 0.99983
y = -0.056x + 1048
R2 = 0.9991
C2PR1
C2PR2
C2PR3
C2PR4
Linear (C2PR1)
Linear (C2PR2)
Linear (C2PR3)
Linear (C2PR4)

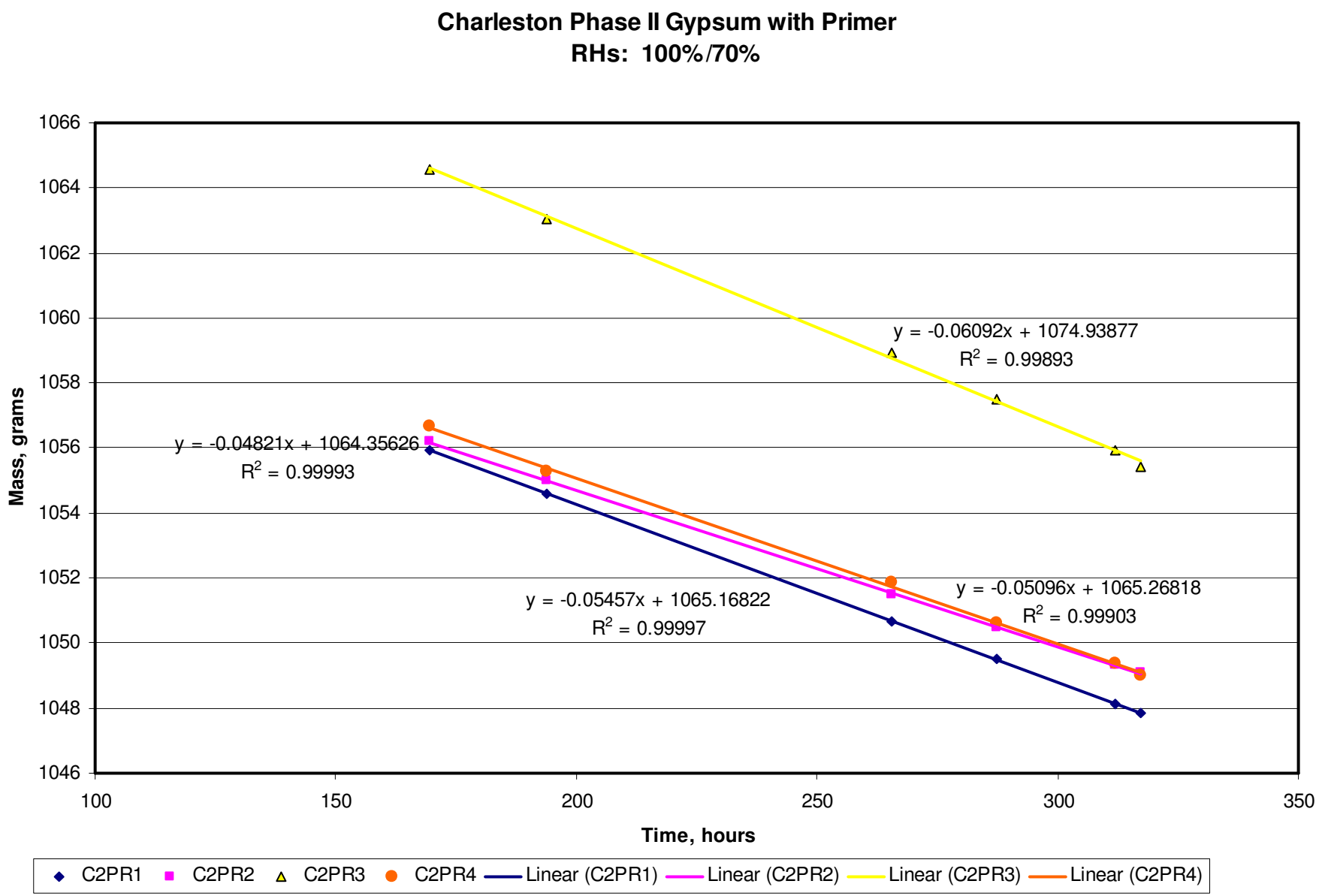
Charleston Phase II Gypsum with Primer
RHs: 100%/70%
Mass, grams
Time, hours
1066
1064
1062
1060
1058
1056
1054
1052
1050
1048
1046
100
150
200
250
300
350
y = -0.06092x + 1074.93877
R2 = 0.99893
y = -0.04821x + 1064.35626
R2 = 0.99993
y = -0.05457x + 1065.16822
R2 = 0.99997
y = -0.05096x + 1065.26818
R2 = 0.99903
C2PR1
C2PR2
C2PR3
C2PR4
Linear (C2PR1)
Linear (C2PR2)
Linear (C2PR3)
Linear (C2PR4)

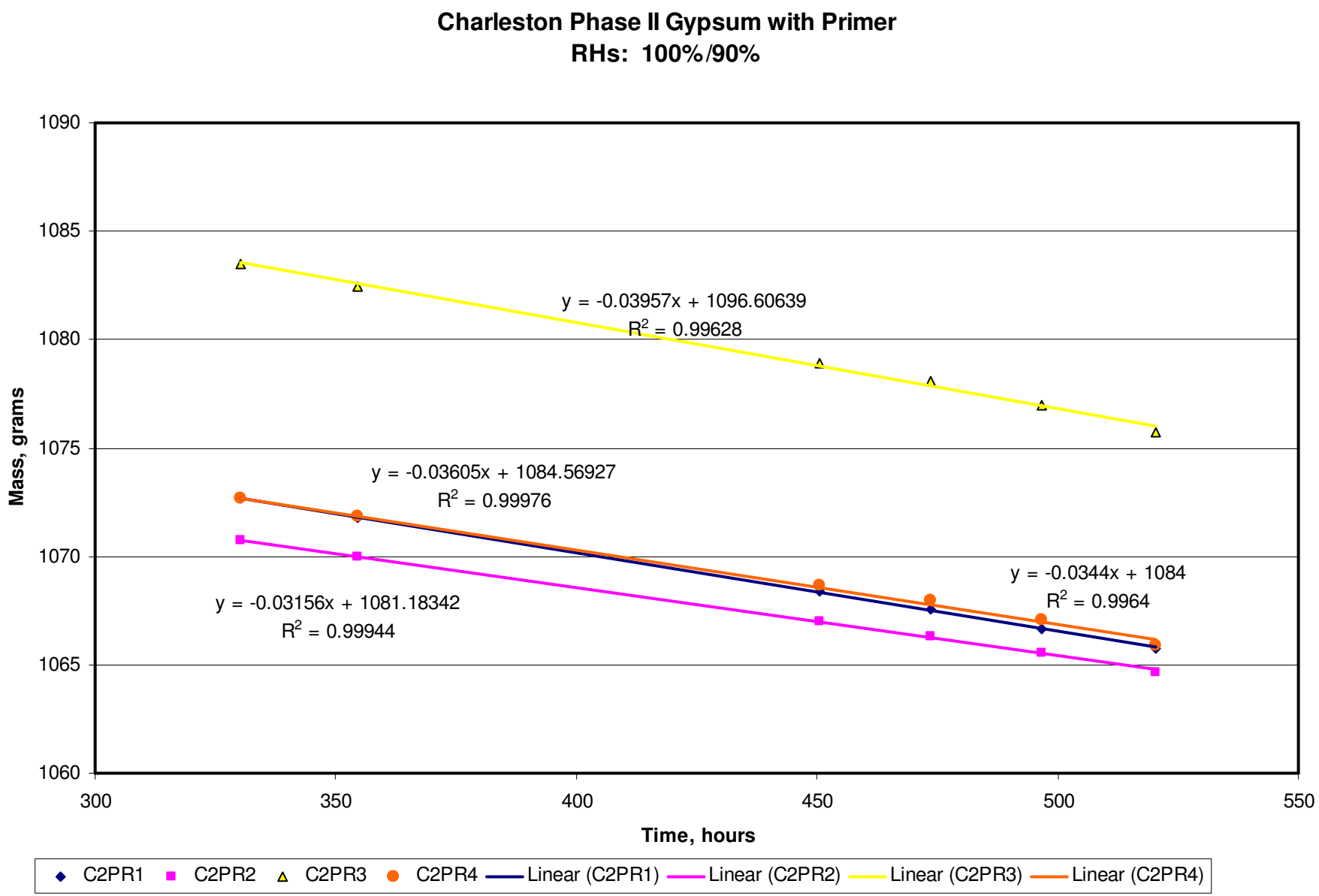
Charleston Phase II Gypsum with Primer
RHs: 100%/90%
1090
1085
1080
1075
1070
1065
1060
Mass, grams
300
350
400
450
500
550
Time, hours
y = -0.03957x + 1096.60639
R2 = 0.99628
y = -0.03605x + 1084.56927
R2 = 0.99976
y = -0.03156x + 1081.18342
R2 = 0.99944
y = -0.0344x + 1084
R2 = 0.9964
C2PR1
C2PR2
C2PR3
C2PR4
Linear (C2PR1)
Linear (C2PR2)
Linear (C2PR3)
Linear (C2PR4)

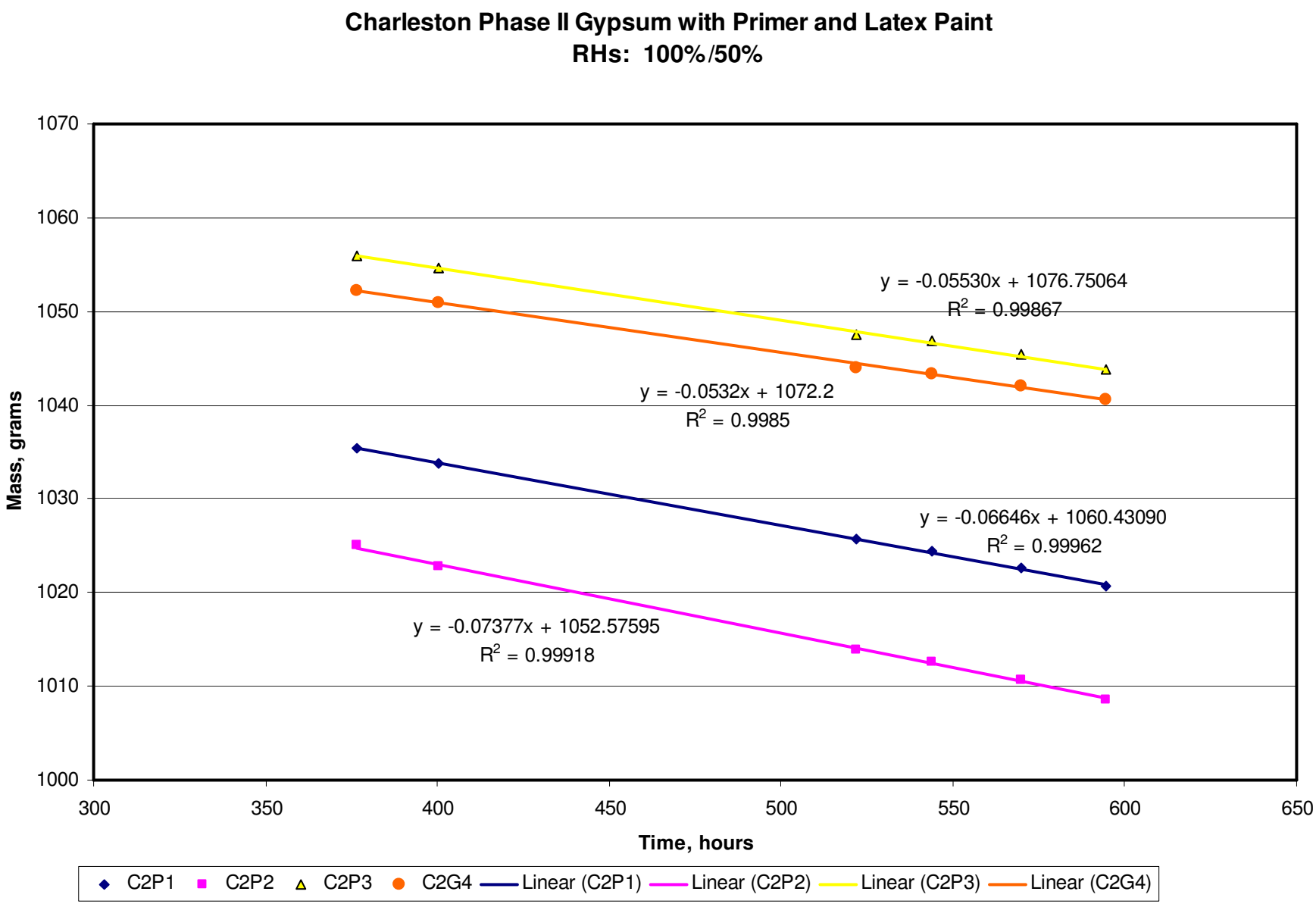
Charleston Phase II Gypsum with Primer and Latex Paint
RHs: 100%/50%
Mass, grams
Time, hours
1070
1060
1050
1040
1030
1020
1010
1000
300
350
400
450
500
550
600
650
y = -0.05530x + 1076.75064
R2 = 0.99867
y = -0.0532x + 1072.2
R2 = 0.9985
y = -0.06646x + 1060.43090
R2 = 0.99962
y = -0.07377x + 1052.57595
R2 = 0.99918
C2P1
C2P2
C2P3
C2G4
Linear (C2P1)
Linear (C2P2)
Linear (C2P3)
Linear (C2G4)

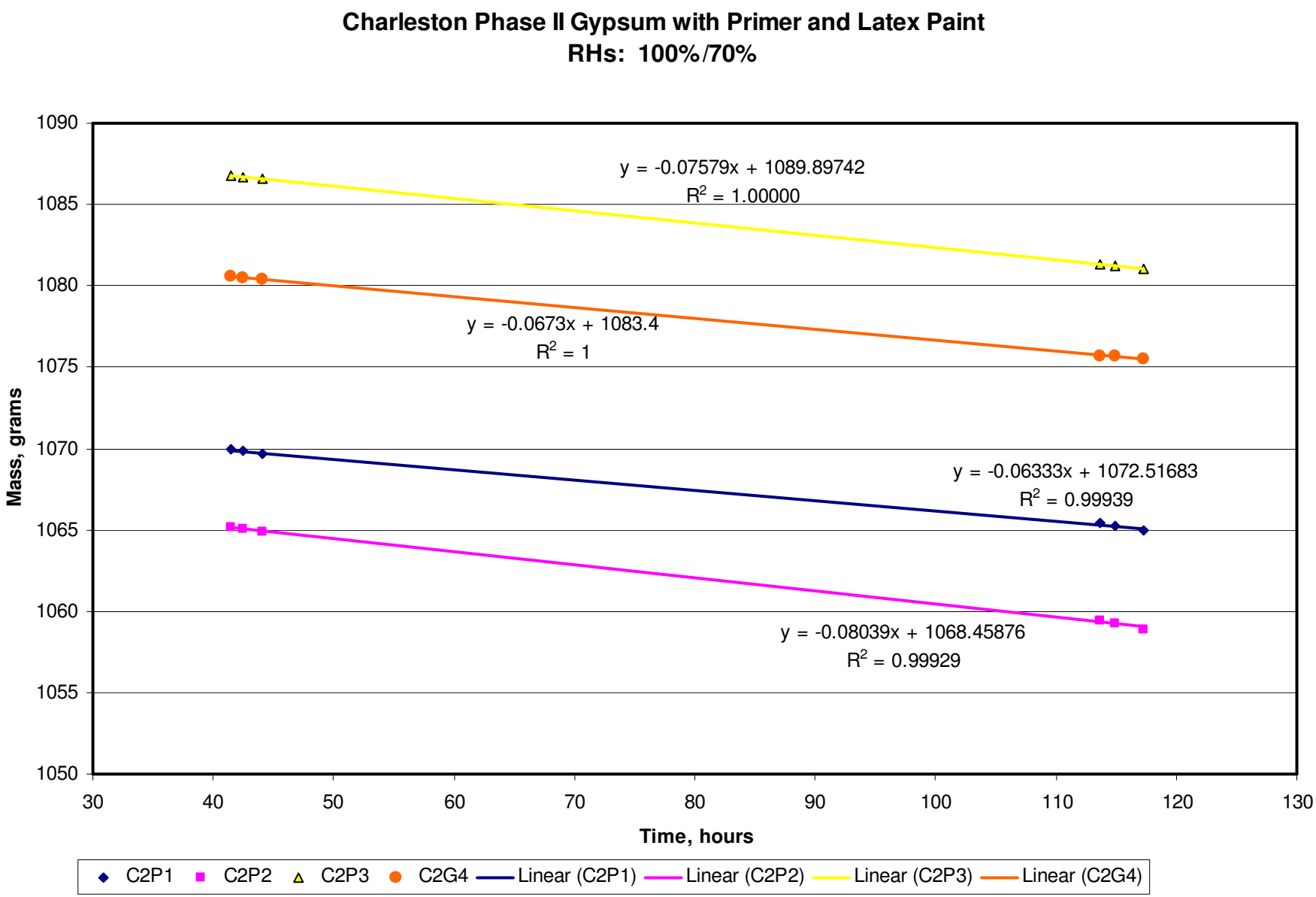
Charleston Phase II Gypsum with Primer and Latex Paint
RHs: 100%/70%
y = -0.07579x + 1089.89742
R2 = 1.00000
y = -0.0673x + 1083.4
R2 = 1
y = -0.06333x + 1072.51683
R2 = 0.99939
y = -0.08039x + 1068.45876
R2 = 0.99929
Mass, grams
Time, hours
1090
1085
1080
1075
1070
1065
1060
1055
1050
30
40
50
60
70
80
90
100
110
120
130
C2P1
C2P2
C2P3
C2G4
Linear (C2P1)
Linear (C2P2)
Linear (C2P3)
Linear (C2G4)

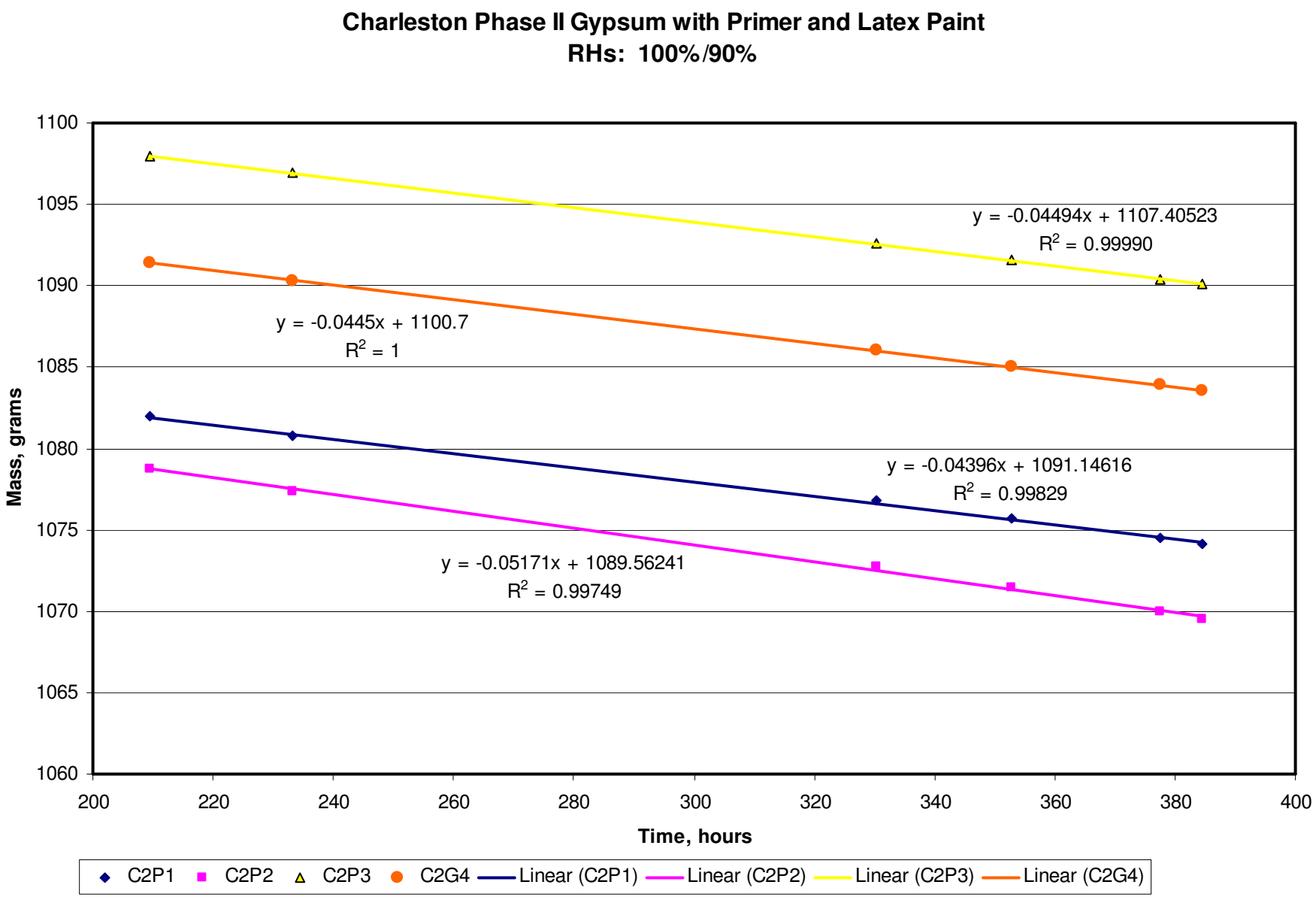
Charleston Phase II Gypsum with Primer and Latex Paint
RHs: 100%/90%
Mass, grams
Time, hours
1100
1095
1090
1085
1080
1075
1070
1065
1060
200
220
240
260
280
300
320
340
360
380
400
y = -0.04494x + 1107.40523
R2 = 0.99990
y = -0.0445x + 1100.7
R2 = 1
y = -0.04396x + 1091.14616
R2 = 0.99829
y = -0.05171x + 1089.56241
R2 = 0.99749
C2P1
C2P2
C2P3
C2G4
Linear (C2P1)
Linear (C2P2)
Linear (C2P3)
Linear (C2G4)

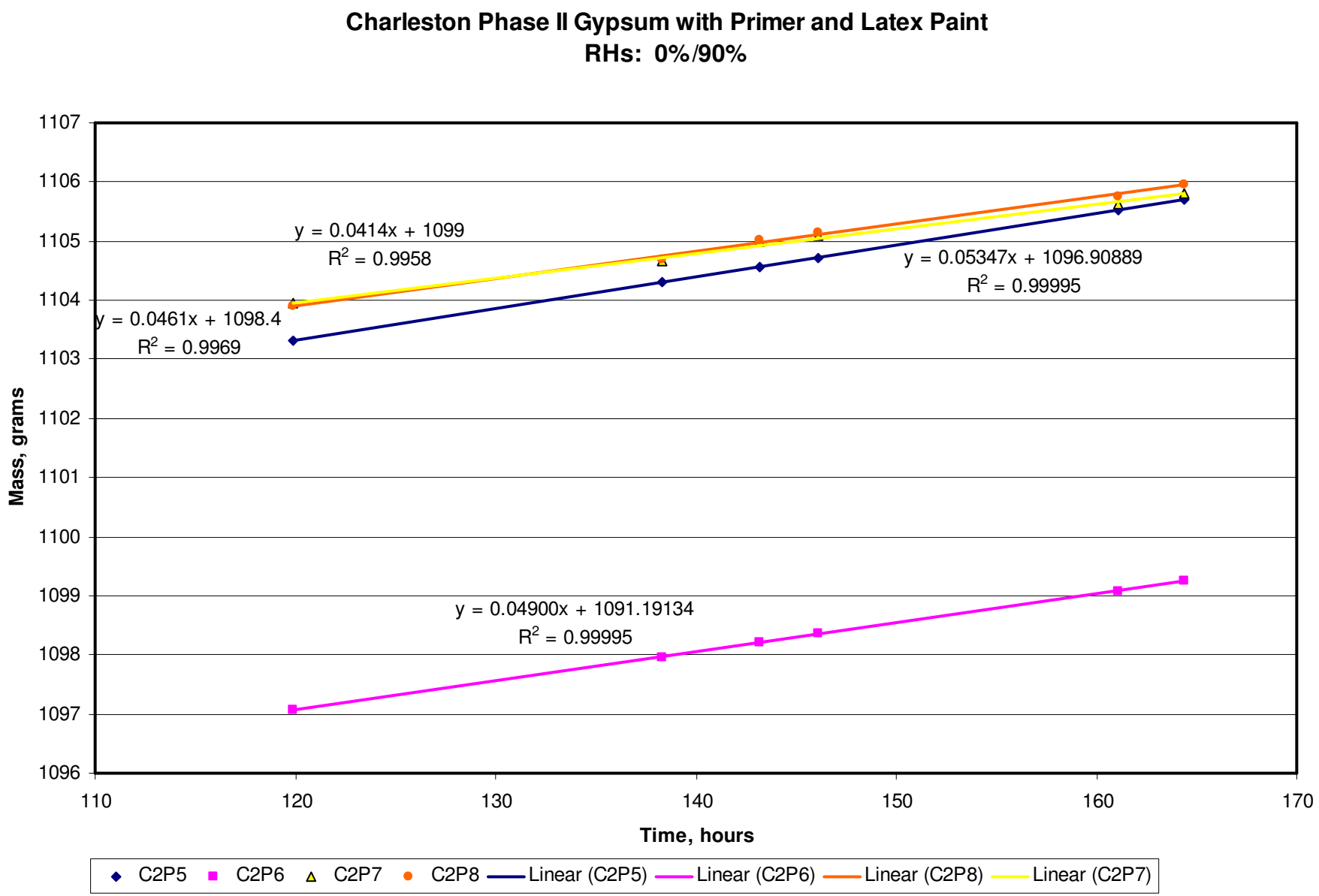
Charleston Phase II Gypsum with Primer and Latex Paint
RHs: 0%/90%
Mass, grams
Time, hours
1107
1106
1105
1104
1103
1102
1101
1100
1099
1098
1097
1096
110
120
130
140
150
160
170
y = 0.0414x + 1099
R2 = 0.9958
y = 0.0461x + 1098.4
R2 = 0.9969
y = 0.05347x + 1096.90889
R2 = 0.99995
y = 0.04900x + 1091.19134
R2 = 0.99995
C2P5
C2P6
C2P7
C2P8
Linear (C2P5)
Linear (C2P6)
Linear (C2P8)
Linear (C2P7)

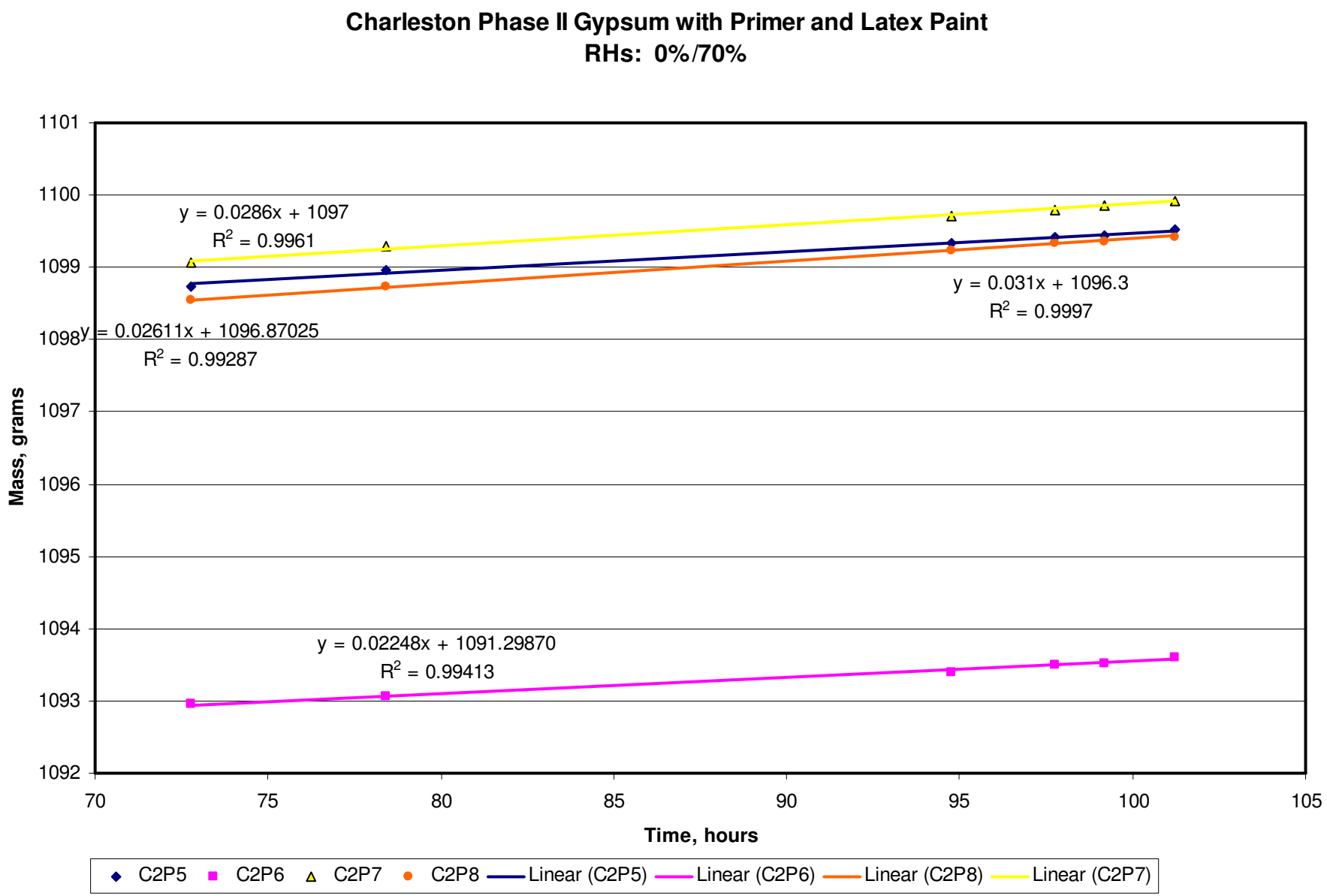
Charleston Phase II Gypsum with Primer and Latex Paint
RHs: 0%/70%
y = 0.0286x + 1097
R2 = 0.9961
y = 0.031x + 1096.3
R2 = 0.9997
y = 0.02611x + 1096.87025
R2 = 0.99287
y = 0.02248x + 1091.29870
R2 = 0.99413
Mass, grams
Time, hours
1101
1100
1099
1098
1097
1096
1095
1094
1093
1092
70
75
80
85
90
95
100
105
C2P5
C2P6
C2P7
C2P8
Linear (C2P5)
Linear (C2P6)
Linear (C2P8)
Linear (C2P7)

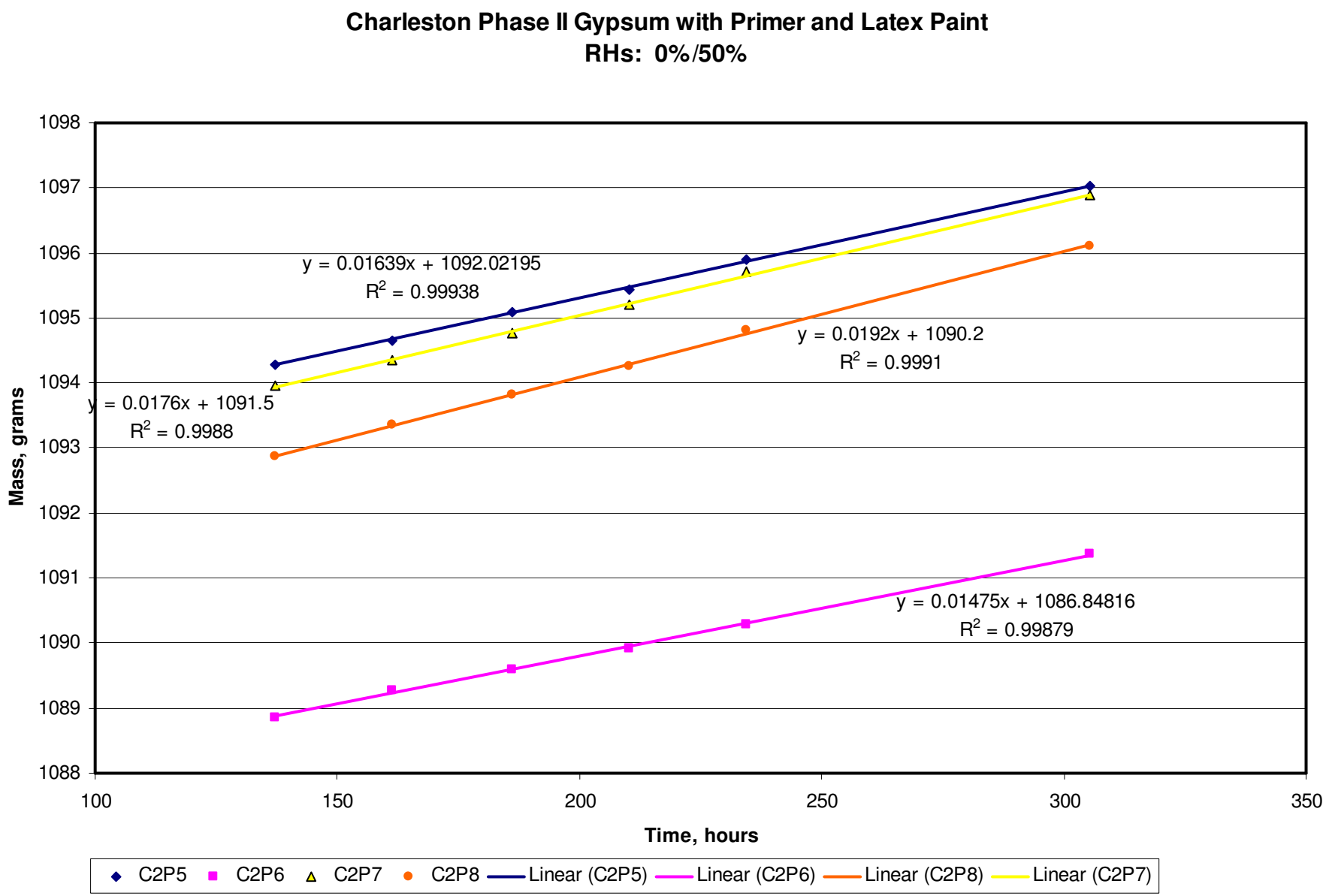
Charleston Phase II Gypsum with Primer and Latex Paint
RHs: 0%/50%
Mass, grams
Time, hours
1098
1097
1096
1095
1094
1093
1092
1091
1090
1089
1088
100
150
200
250
300
350
y = 0.01639x + 1092.02195
R2 = 0.99938
y = 0.0192x + 1090.2
R2 = 0.9991
y = 0.0176x + 1091.5
R2 = 0.9988
y = 0.01475x + 1086.84816
R2 = 0.99879
C2P5
C2P6
C2P7
C2P8
Linear (C2P5)
Linear (C2P6)
Linear (C2P8)
Linear (C2P7)

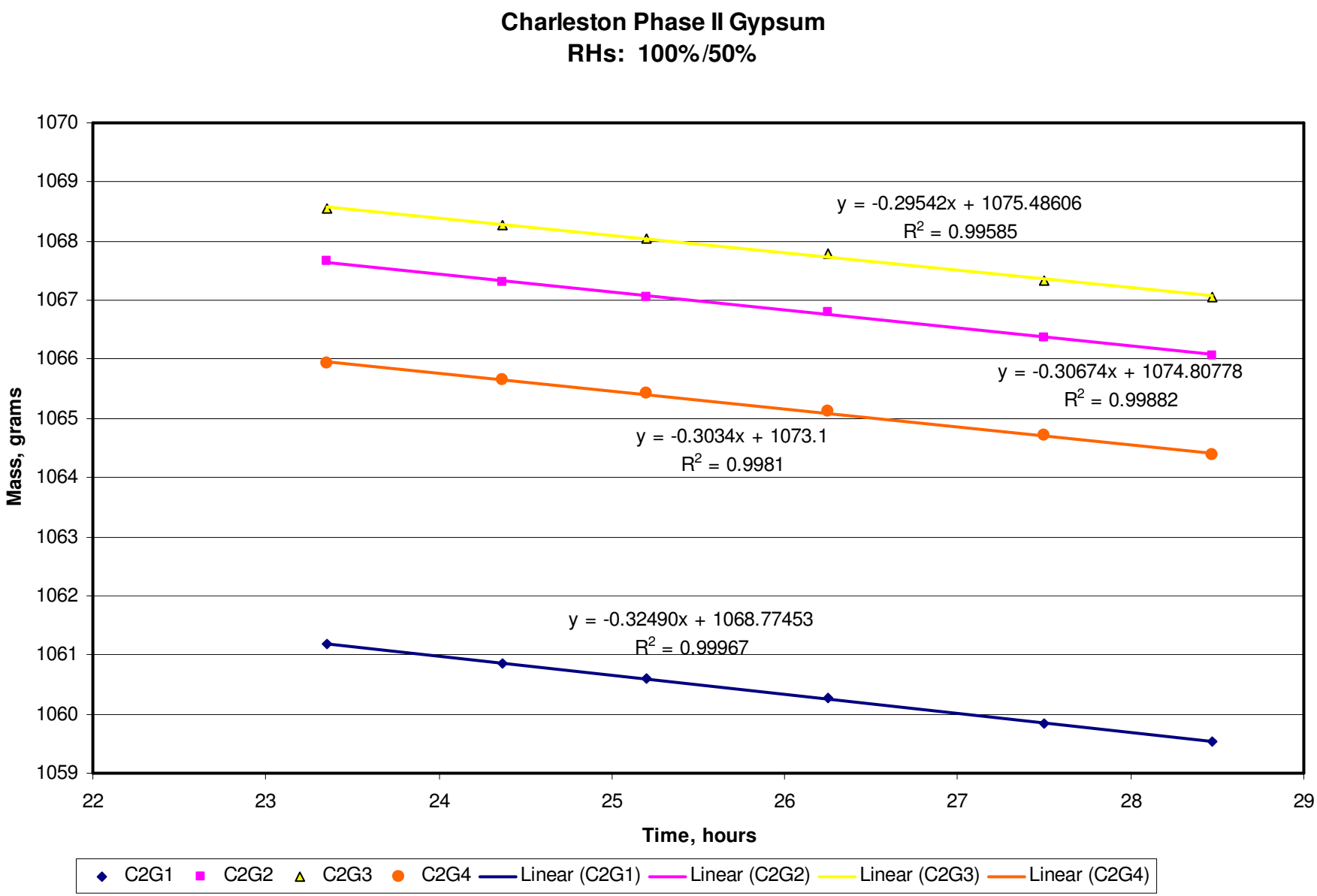
Charleston Phase II Gypsum
RHs: 100%/50%
Mass, grams
Time, hours
1070
1069
1068
1067
1066
1065
1064
1063
1062
1061
1060
1059
22
23
24
25
26
27
28
29
y = -0.29542x + 1075.48606
R2 = 0.99585
y = -0.30674x + 1074.80778
R2 = 0.99882
y = -0.3034x + 1073.1
R2 = 0.9981
y = -0.32490x + 1068.77453
R2 = 0.99967
C2G1
C2G2
C2G3
C2G4
Linear (C2G1)
Linear (C2G2)
Linear (C2G3)
Linear (C2G4)

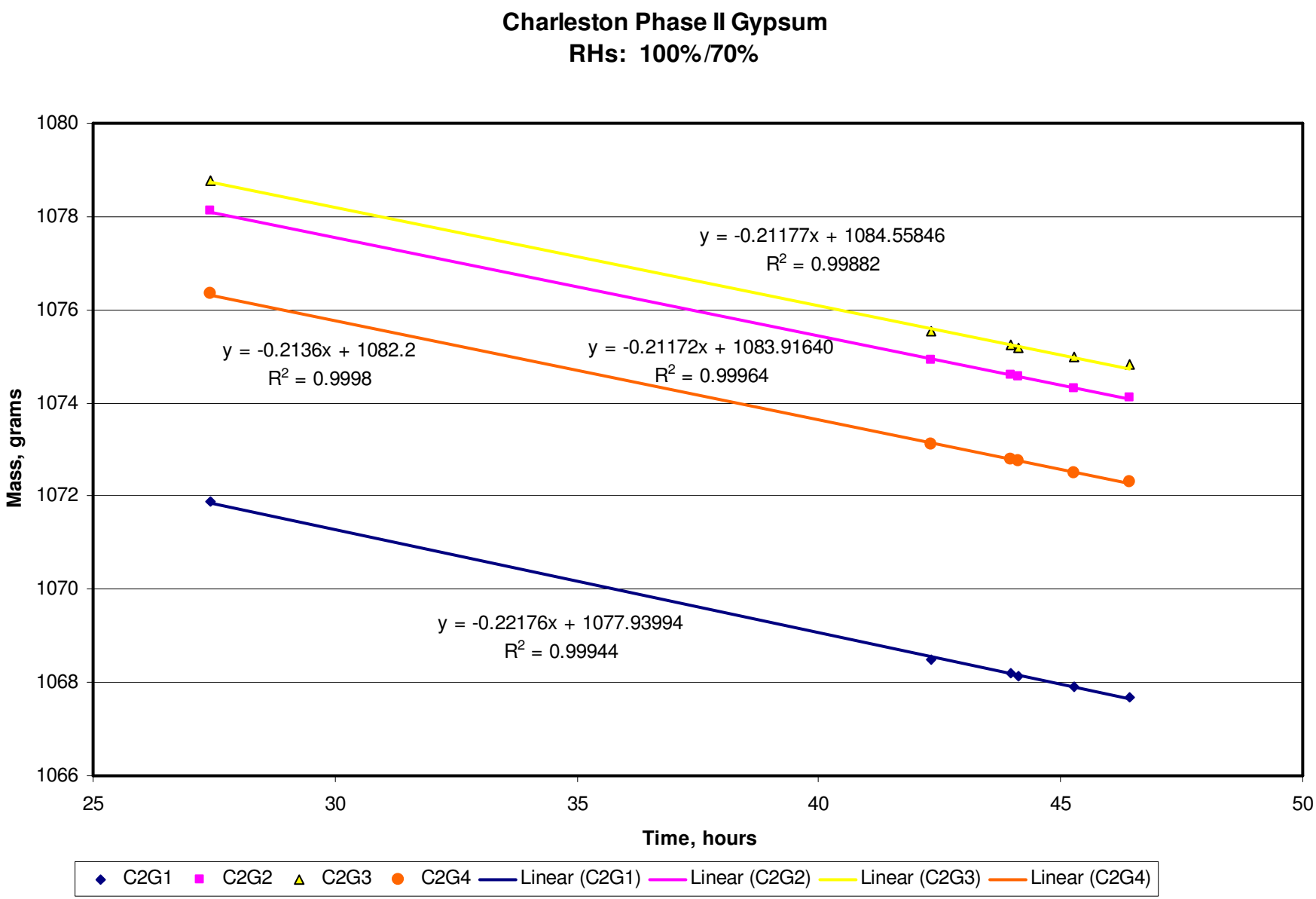
Charleston Phase II Gypsum
RHs: 100%/70%
1080
1078
1076
1074
1072
1070
1068
1066
Mass, grams
25
30
35
40
45
50
Time, hours
y = -0.21177x + 1084.55846
R2 = 0.99882
y = -0.2136x + 1082.2
R2 = 0.9998
y = -0.21172x + 1083.91640
R2 = 0.99964
y = -0.22176x + 1077.93994
R2 = 0.99944
C2G1
C2G2
C2G3
C2G4
Linear (C2G1)
Linear (C2G2)
Linear (C2G3)
Linear (C2G4)

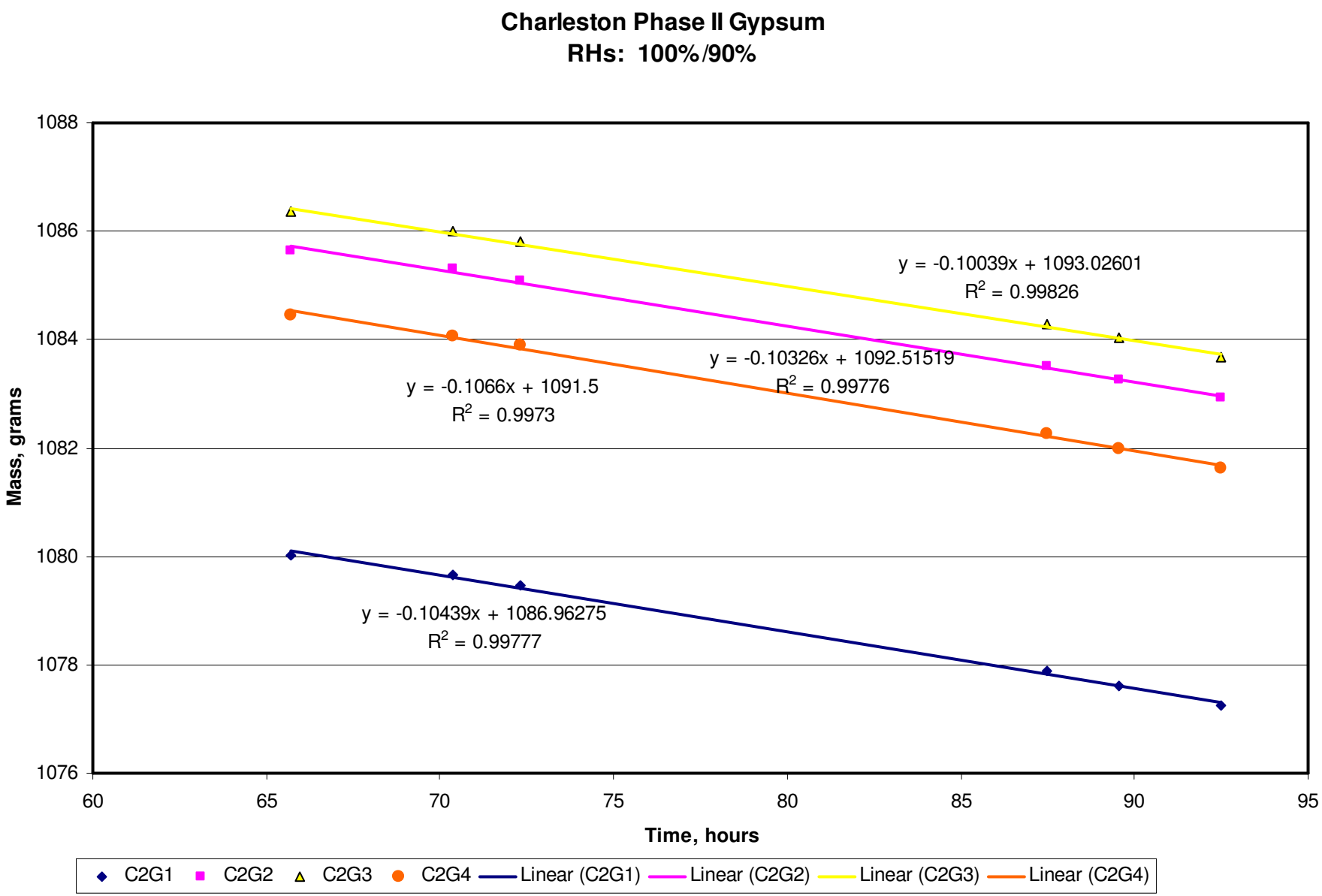
Charleston Phase II Gypsum
RHs: 100%/90%
Mass, grams
Time, hours
1088
1086
1084
1082
1080
1078
1076
60
65
70
75
80
85
90
95
y = -0.10039x + 1093.02601
R2 = 0.99826
y = -0.10326x + 1092.51519
R2 = 0.99776
y = -0.1066x + 1091.5
R2 = 0.9973
y = -0.10439x + 1086.96275
R2 = 0.99777
C2G1
C2G2
C2G3
C2G4
Linear (C2G1)
Linear (C2G2)
Linear (C2G3)
Linear (C2G4)

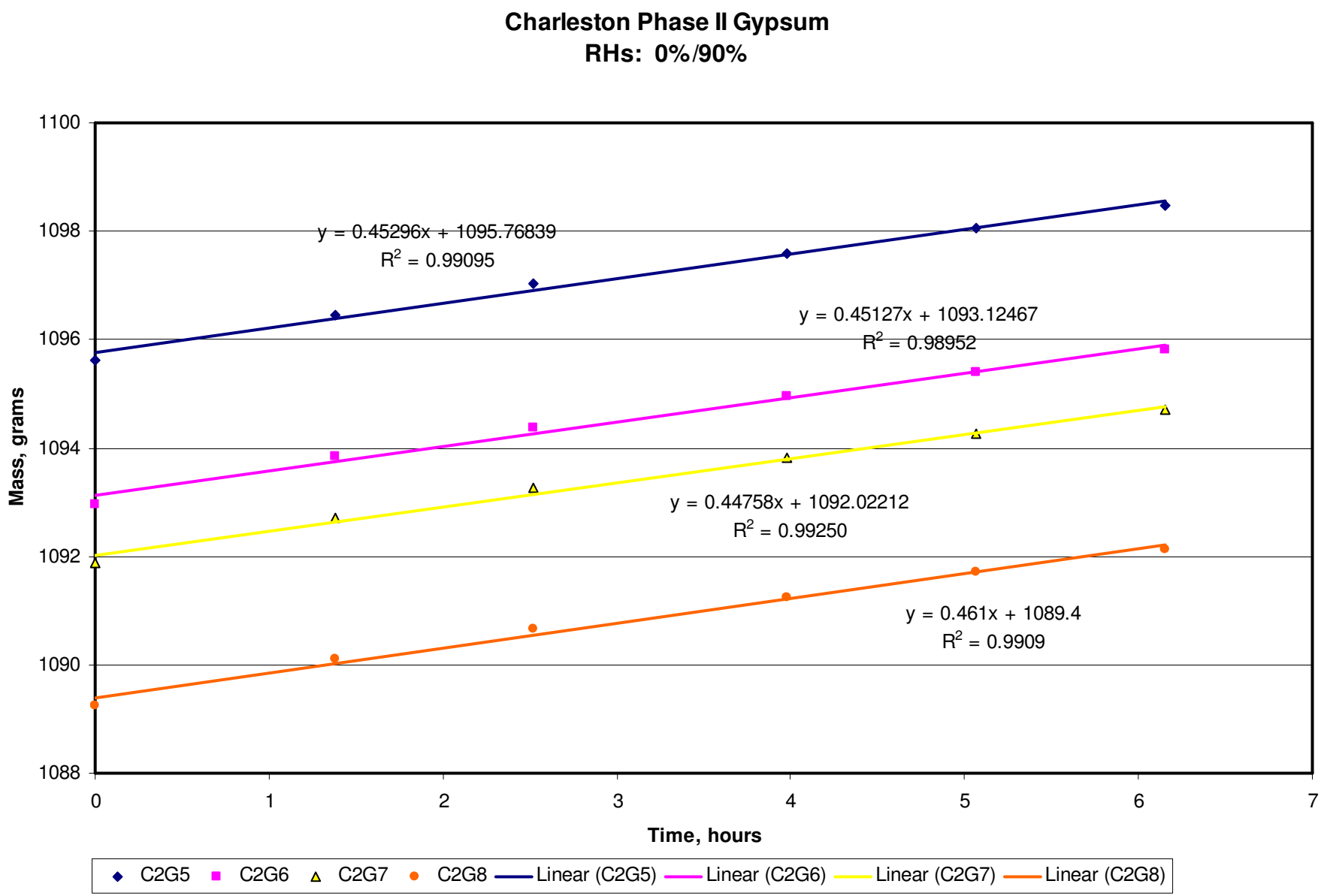
Charleston Phase II Gypsum
RHs: 0%/90%
y = 0.45296x + 1095.76839
R2 = 0.99095
y = 0.45127x + 1093.12467
R2 = 0.98952
y = 0.44758x + 1092.02212
R2 = 0.99250
y = 0.461x + 1089.4
R2 = 0.9909
Mass, grams
Time, hours
1100
1098
1096
1094
1092
1090
1088
0
1
2
3
4
5
6
7
C2G5
C2G6
C2G7
C2G8
Linear (C2G5)
Linear (C2G6)
Linear (C2G7)
Linear (C2G8)

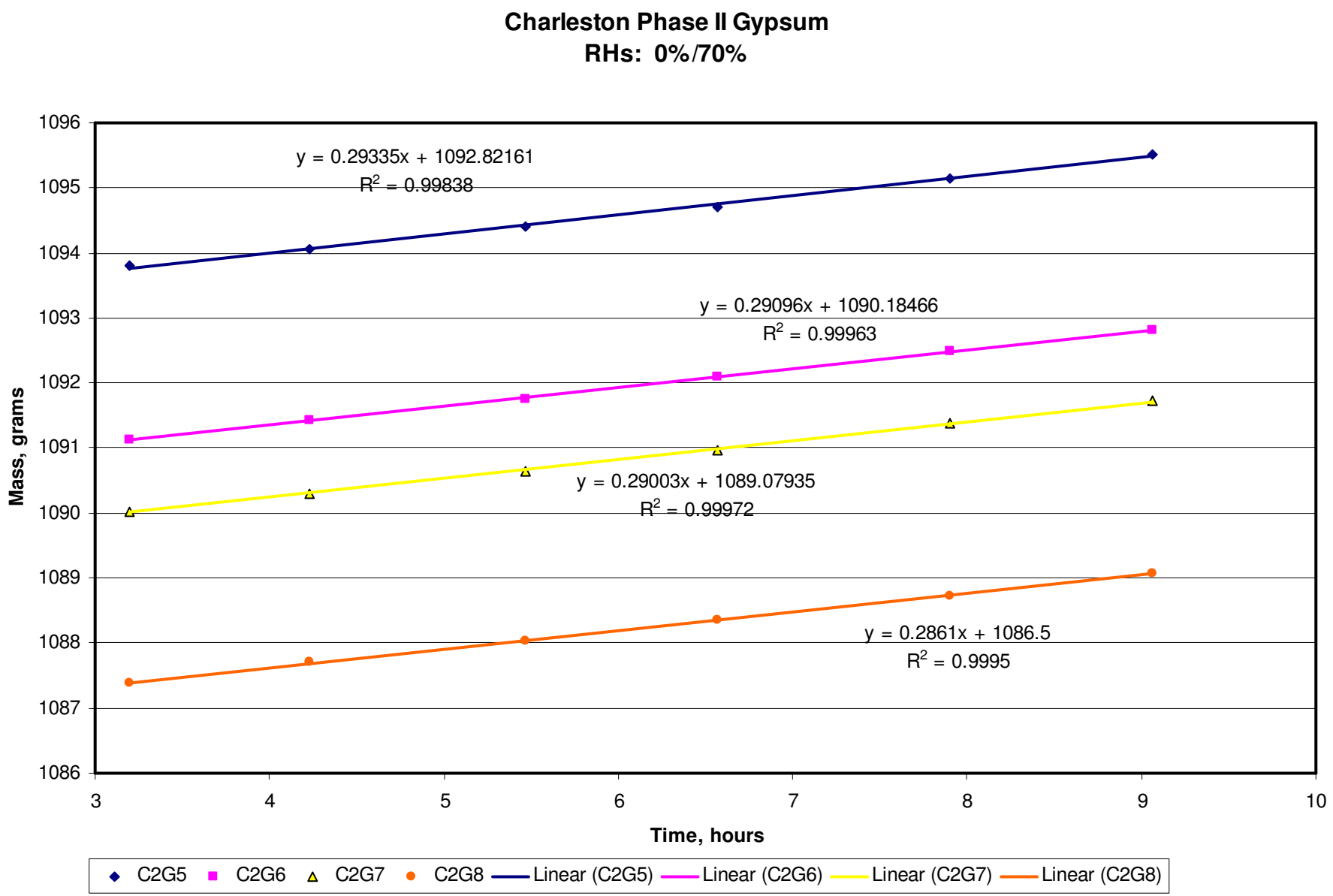
Charleston Phase II Gypsum
RHs: 0%/70%
y = 0.29335x + 1092.82161
R2 = 0.99838
y = 0.29096x + 1090.18466
R2 = 0.99963
y = 0.29003x + 1089.07935
R2 = 0.99972
y = 0.2861x + 1086.5
R2 = 0.9995
Mass, grams
Time, hours
1096
1095
1094
1093
1092
1091
1090
1089
1088
1087
1086
3
4
5
6
7
8
9
10
C2G5
C2G6
C2G7
C2G8
Linear (C2G5)
Linear (C2G6)
Linear (C2G7)
Linear (C2G8)

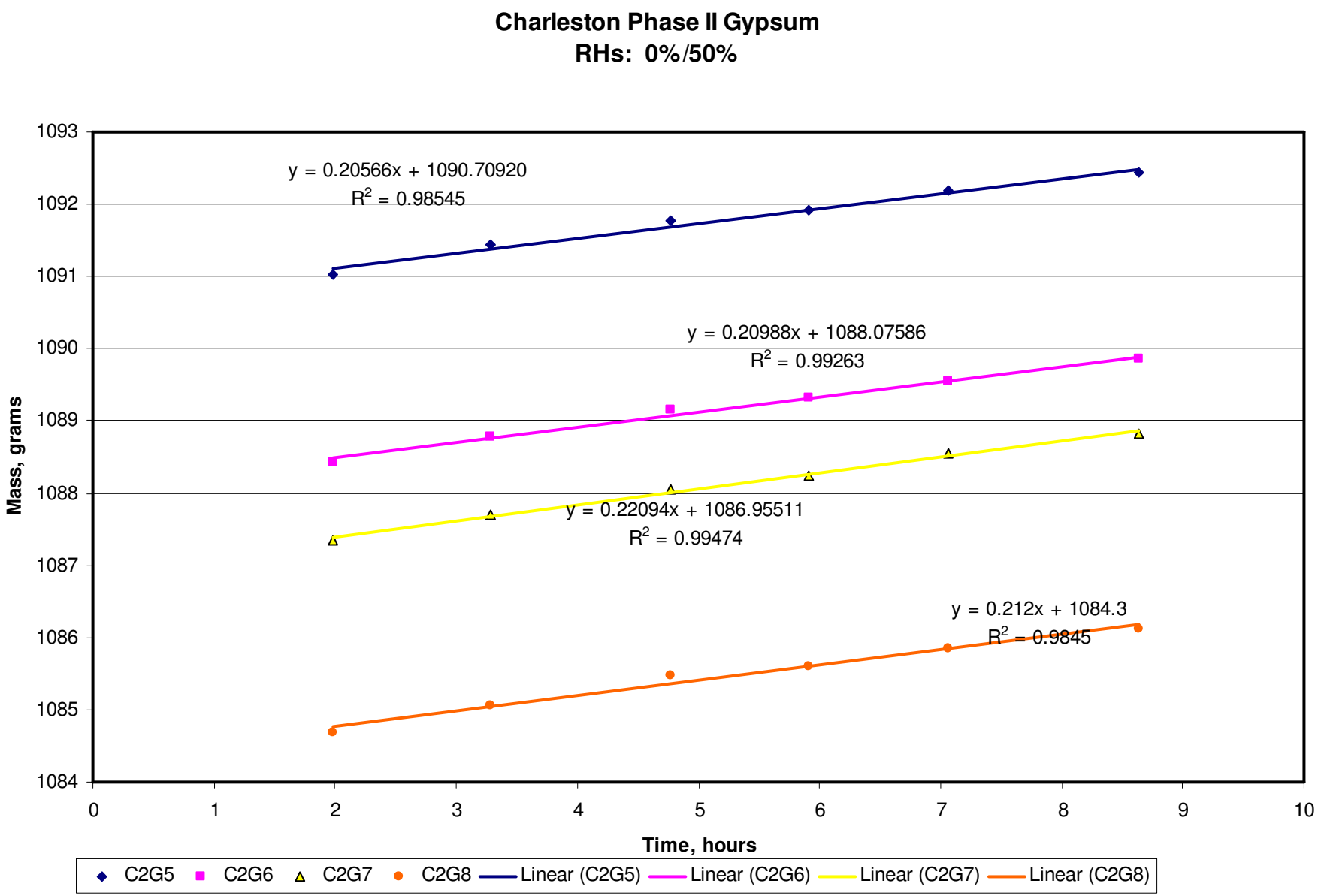
Charleston Phase II Gypsum
RHs: 0%/50%
y = 0.20566x + 1090.70920
R2 = 0.98545
y = 0.20988x + 1088.07586
R2 = 0.99263
y = 0.22094x + 1086.95511
R2 = 0.99474
y = 0.212x + 1084.3
R2 = 0.9845
Mass, grams
1093
1092
1091
1090
1089
1088
1087
1086
1085
1084
0
1
2
3
4
5
6
7
8
9
10
Time, hours
C2G5
C2G6
C2G7
C2G8
Linear (C2G5)
Linear (C2G6)
Linear (C2G7)
Linear (C2G8)

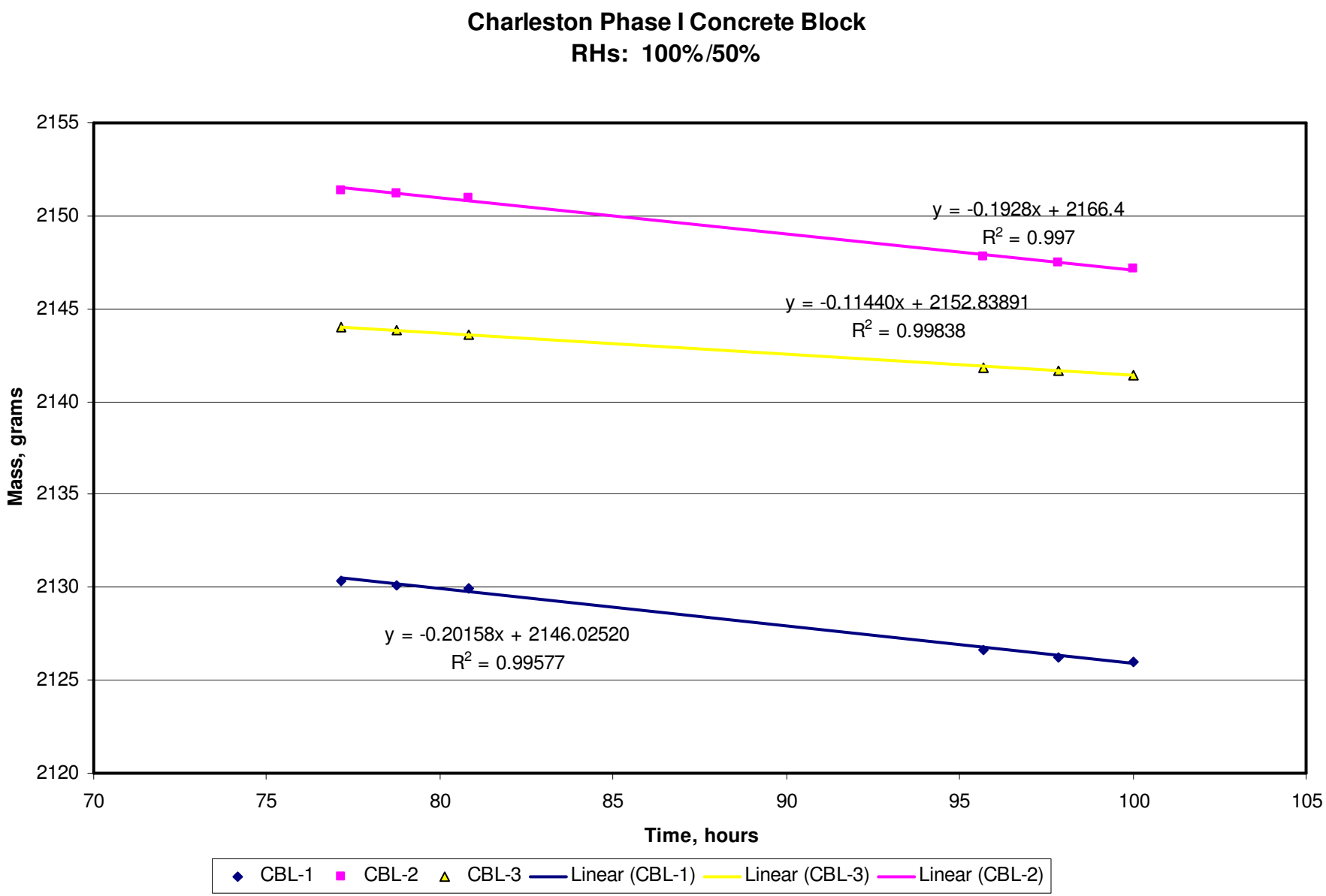
Charleston Phase I Concrete Block
RHs: 100%/50%
Mass, grams
Time, hours
2155
2150
2145
2140
2135
2130
2125
2120
70
75
80
85
90
95
100
105
y = -0.1928x + 2166.4
R2 = 0.997
y = -0.11440x + 2152.83891
R2 = 0.99838
y = -0.20158x + 2146.02520
R2 = 0.99577
CBL-1
CBL-2
CBL-3
Linear (CBL-1)
Linear (CBL-3)
Linear (CBL-2)

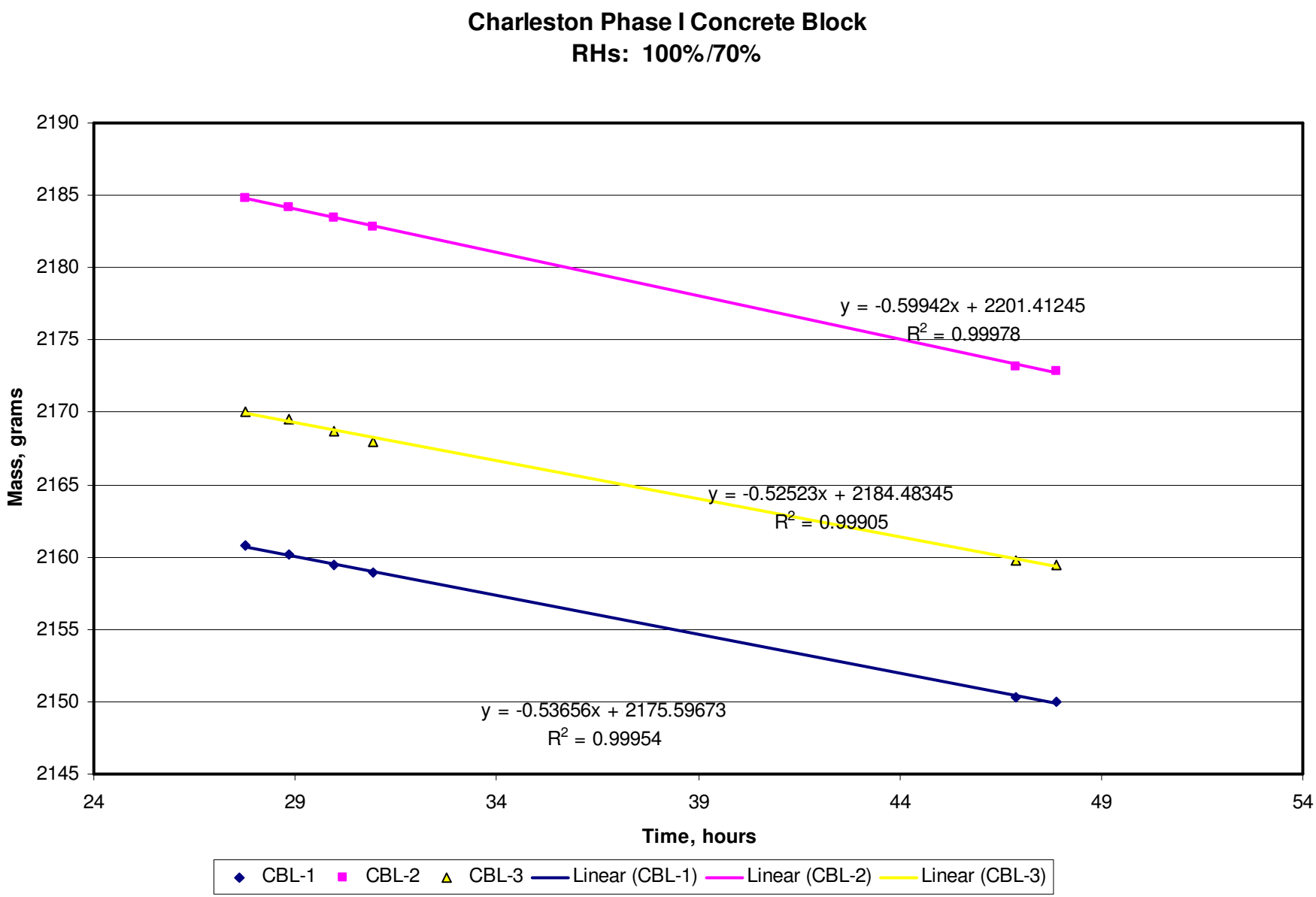
Charleston Phase I Concrete Block
RHs: 100%/70%
Mass, grams
Time, hours
2190
2185
2180
2175
2170
2165
2160
2155
2150
2145
24
29
34
39
44
49
54
y = -0.59942x + 2201.41245
R2 = 0.99978
y = -0.52523x + 2184.48345
R2 = 0.99905
y = -0.53656x + 2175.59673
R2 = 0.99954
CBL-1
CBL-2
CBL-3
Linear (CBL-1)
Linear (CBL-2)
Linear (CBL-3)

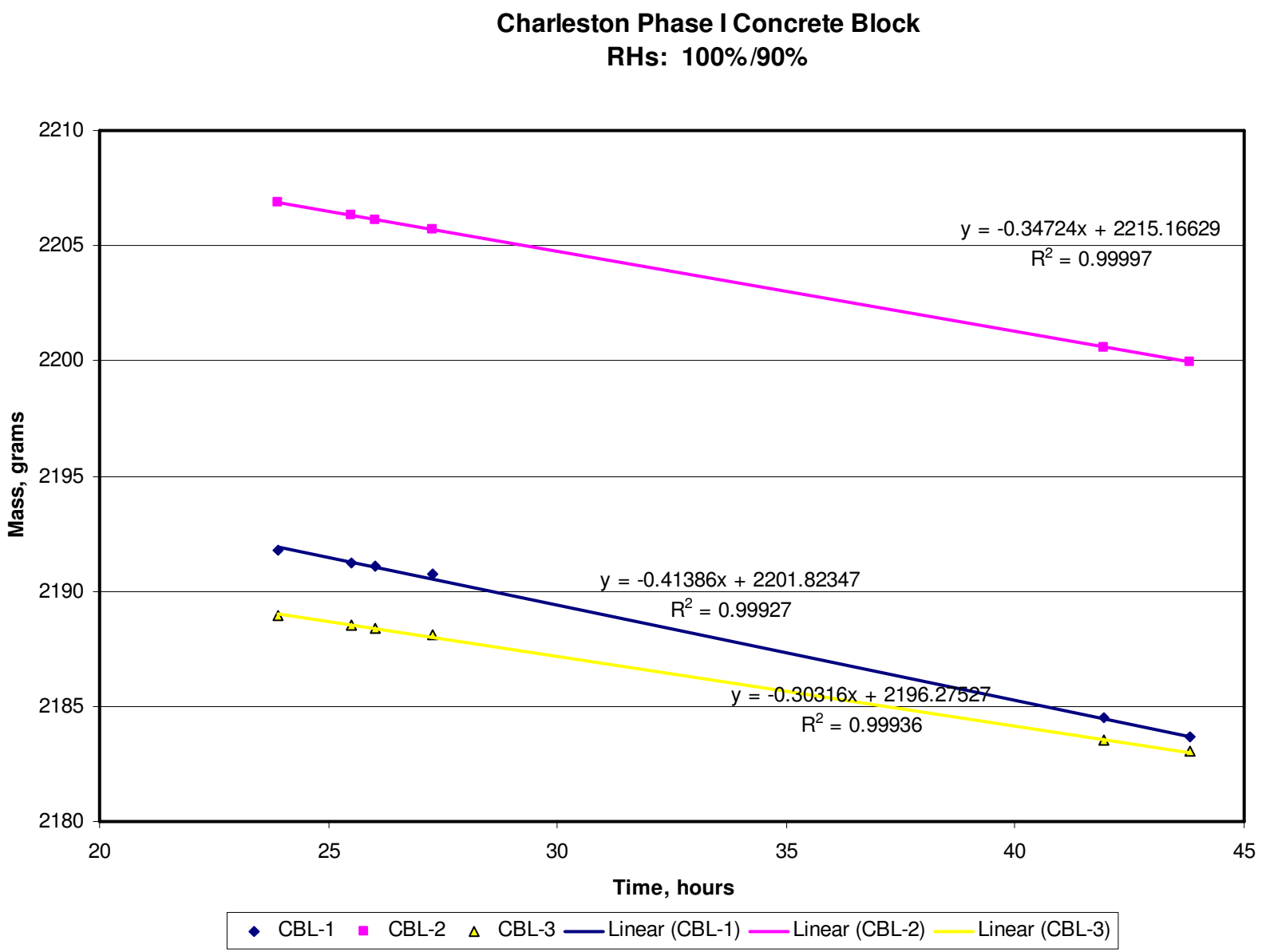
Charleston Phase I Concrete Block
RHs: 100%/90%
Mass, grams
Time, hours
2210
2205
2200
2195
2190
2185
2180
20
25
30
35
40
45
y = -0.34724x + 2215.16629
R2 = 0.99997
y = -0.41386x + 2201.82347
R2 = 0.99927
y = -0.30316x + 2196.27527
R2 = 0.99936
CBL-1
CBL-2
CBL-3
Linear (CBL-1)
Linear (CBL-2)
Linear (CBL-3)

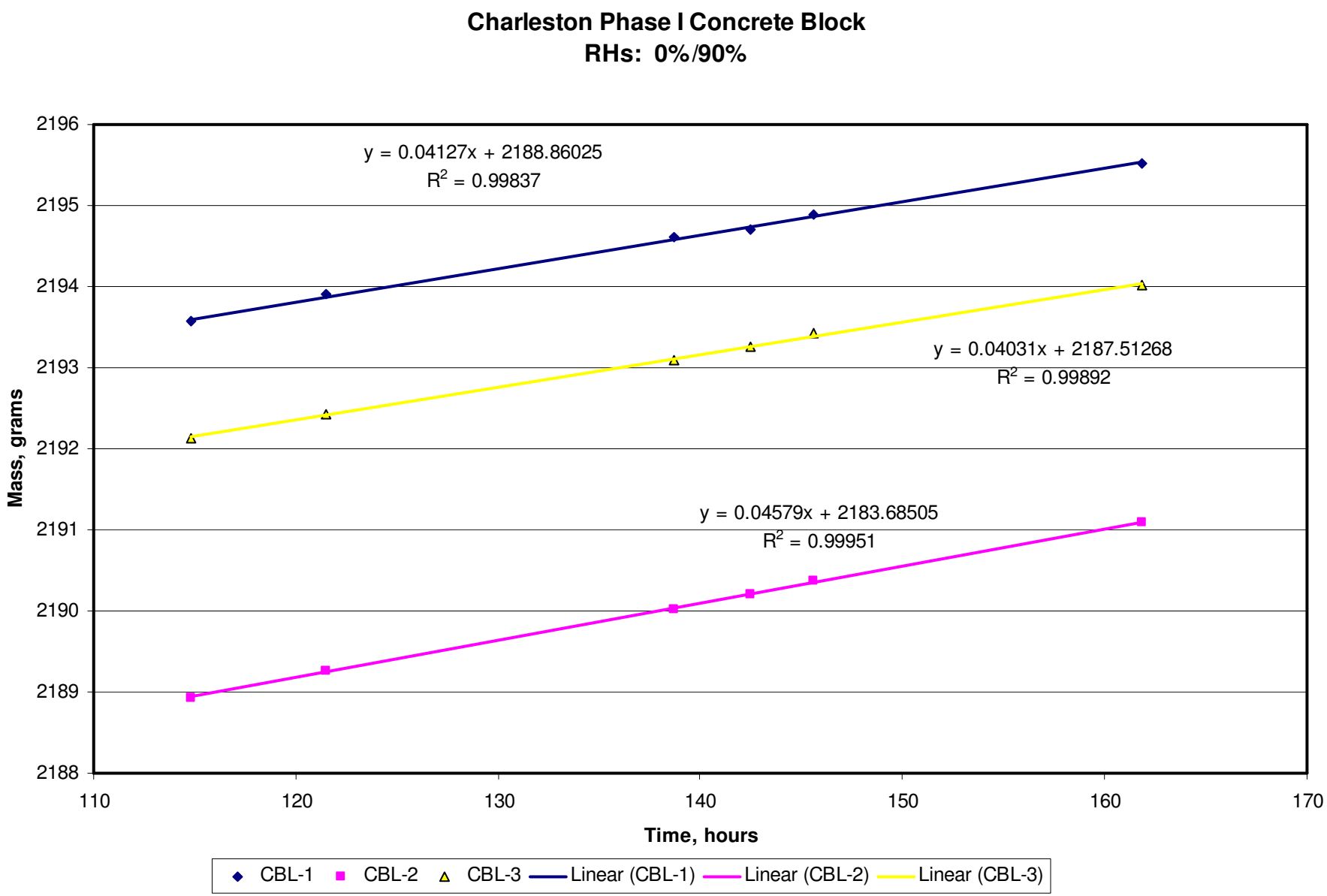
Charleston Phase I Concrete Block
RHs: 0%/90%
y = 0.04127x + 2188.86025
R2 = 0.99837
y = 0.04031x + 2187.51268
R2 = 0.99892
y = 0.04579x + 2183.68505
R2 = 0.99951
Mass, grams
2196
2195
2194
2193
2192
2191
2190
2189
2188
110
120
130
140
150
160
170
Time, hours
CBL-1
CBL-2
CBL-3
Linear (CBL-1)
Linear (CBL-2)
Linear (CBL-3)

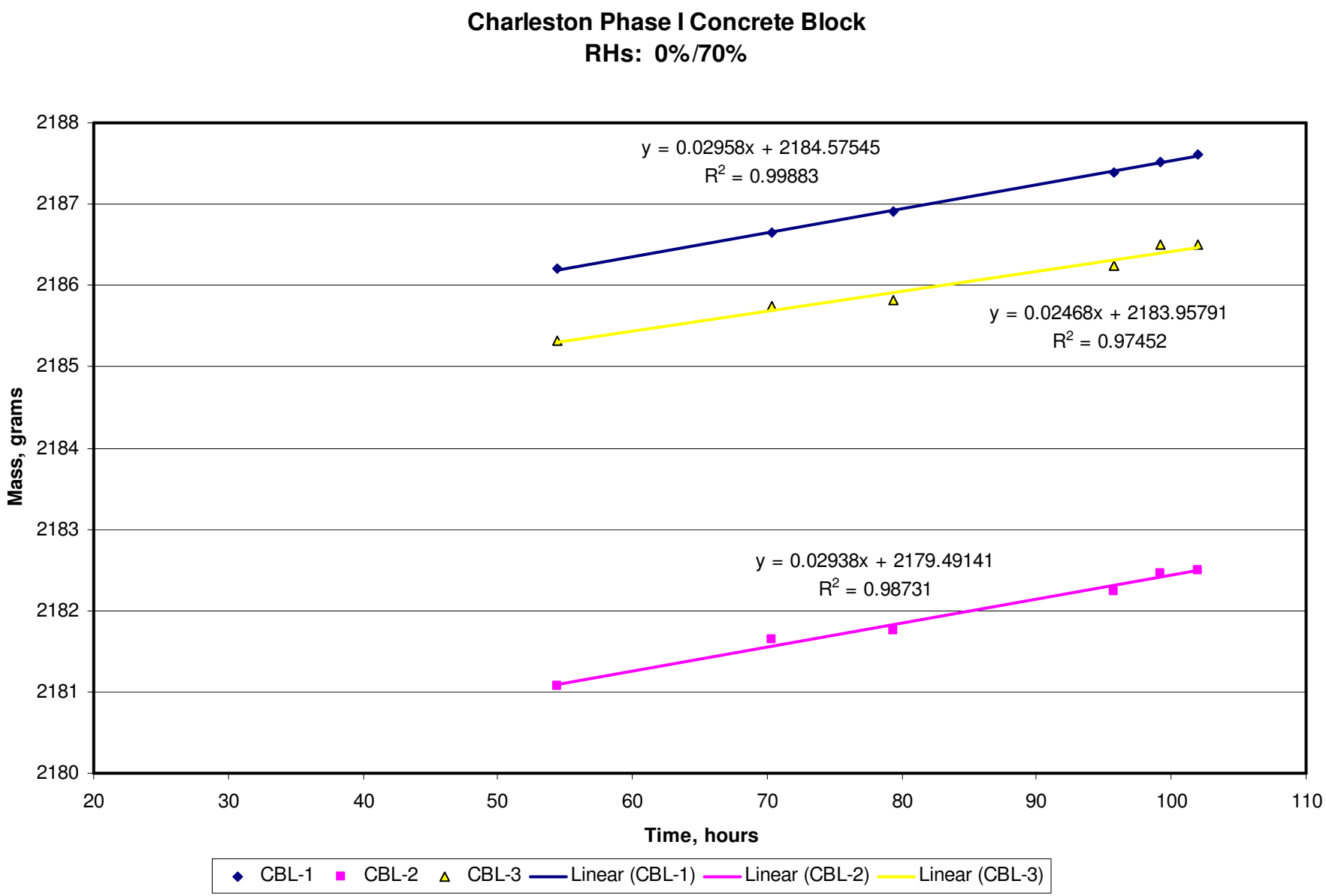
Charleston Phase I Concrete Block
RHs: 0%/70%
y = 0.02958x + 2184.57545
R2 = 0.99883
y = 0.02468x + 2183.95791
R2 = 0.97452
y = 0.02938x + 2179.49141
R2 = 0.98731
Mass, grams
2188
2187
2186
2185
2184
2183
2182
2181
2180
20
30
40
50
60
70
80
90
100
110
Time, hours
CBL-1
CBL-2
CBL-3
Linear (CBL-1)
Linear (CBL-2)
Linear (CBL-3)

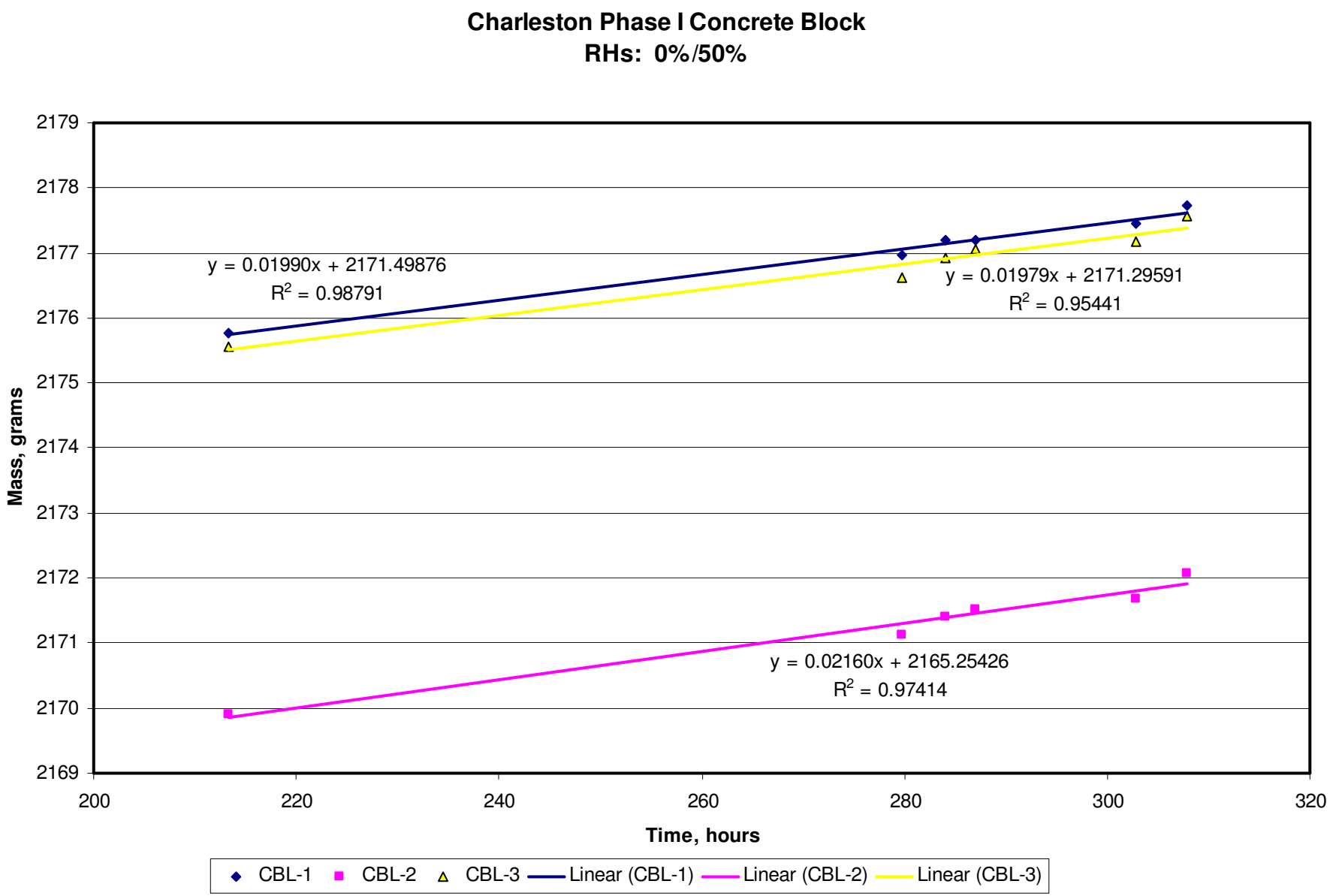
Charleston Phase I Concrete Block
RHs: 0%/50%
Mass, grams
Time, hours
2179
2178
2177
2176
2175
2174
2173
2172
2171
2170
2169
200
220
240
260
280
300
320
y = 0.01990x + 2171.49876
R2 = 0.98791
y = 0.01979x + 2171.29591
R2 = 0.95441
y = 0.02160x + 2165.25426
R2 = 0.97414
CBL-1
CBL-2
CBL-3
Linear (CBL-1)
Linear (CBL-2)
Linear (CBL-3)

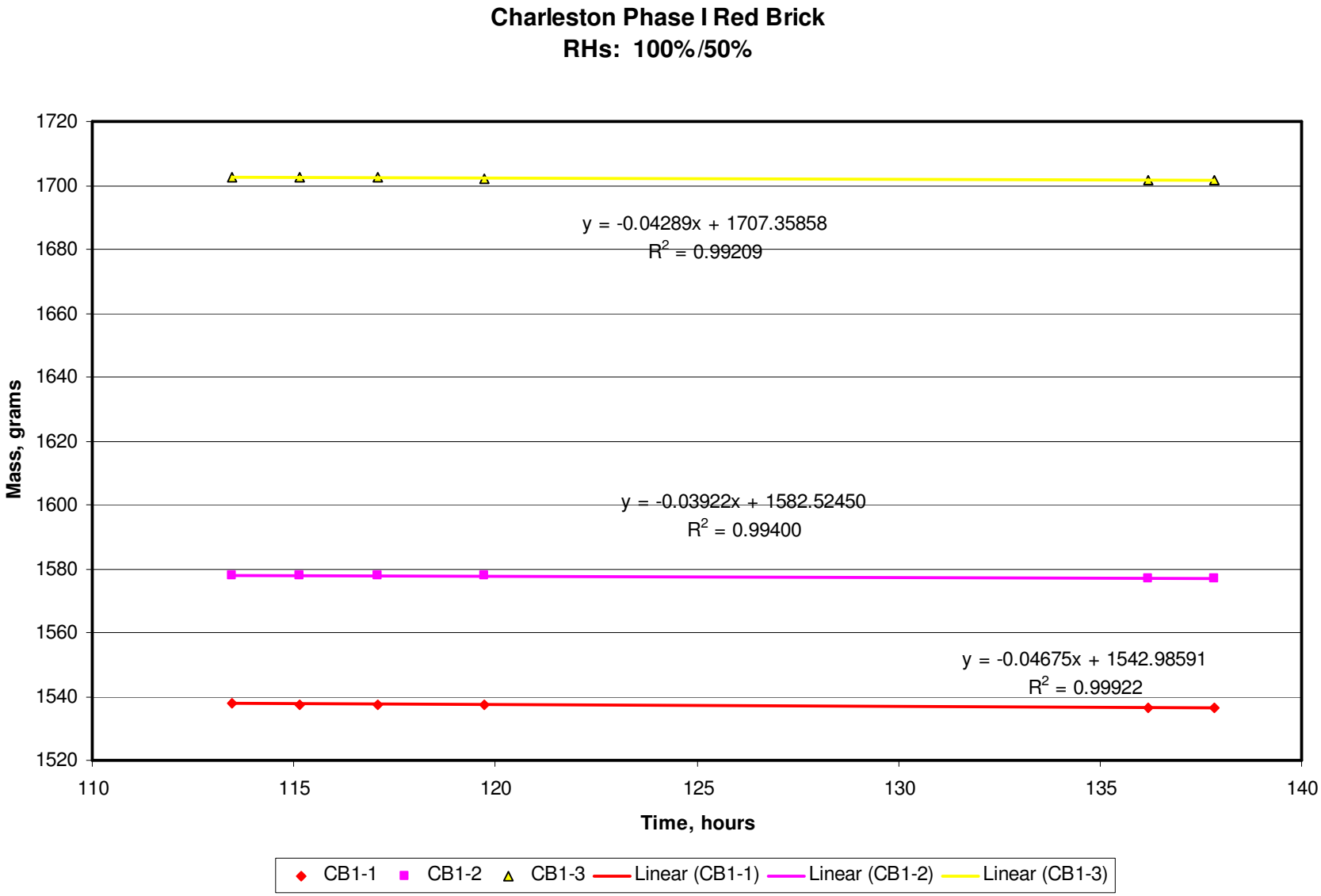
Charleston Phase I Red Brick
RHs: 100%/50%
1720
1700
1680
1660
1640
1620
1600
1580
1560
1540
1520
Mass, grams
y = -0.04289x + 1707.35858
R2 = 0.99209
y = -0.03922x + 1582.52450
R2 = 0.99400
y = -0.04675x + 1542.98591
R2 = 0.99922
110
115
120
125
130
135
140
Time, hours
CB1-1
CB1-2
CB1-3
Linear (CB1-1)
Linear (CB1-2)
Linear (CB1-3)

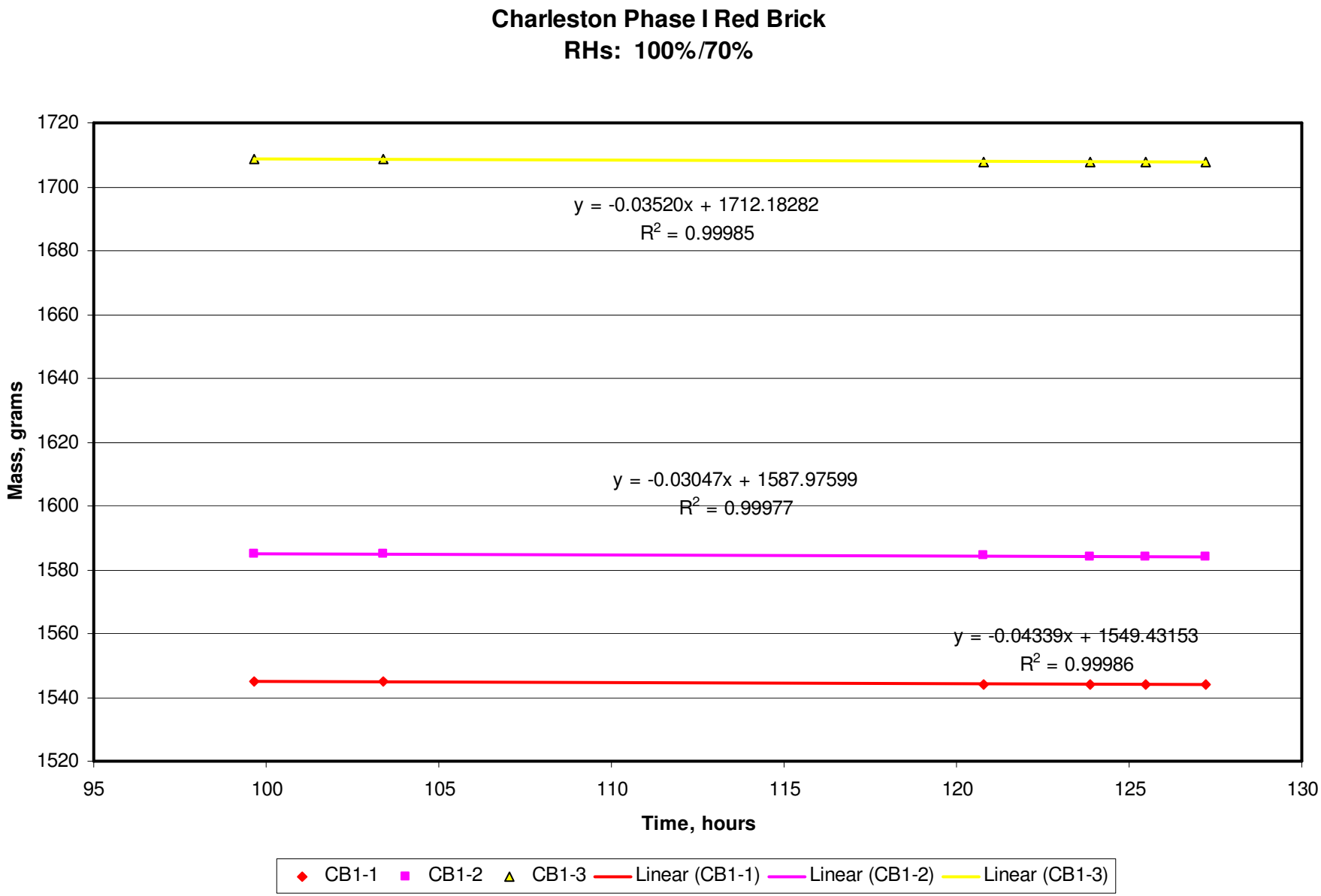
Charleston Phase I Red Brick
RHs: 100%/70%
1720
1700
1680
1660
1640
1620
1600
1580
1560
1540
1520
Mass, grams
95
100
105
110
115
120
125
130
Time, hours
y = -0.03520x + 1712.18282
R2 = 0.99985
y = -0.03047x + 1587.97599
R2 = 0.99977
y = -0.04339x + 1549.43153
R2 = 0.99986
CB1-1
CB1-2
CB1-3
Linear (CB1-1)
Linear (CB1-2)
Linear (CB1-3)

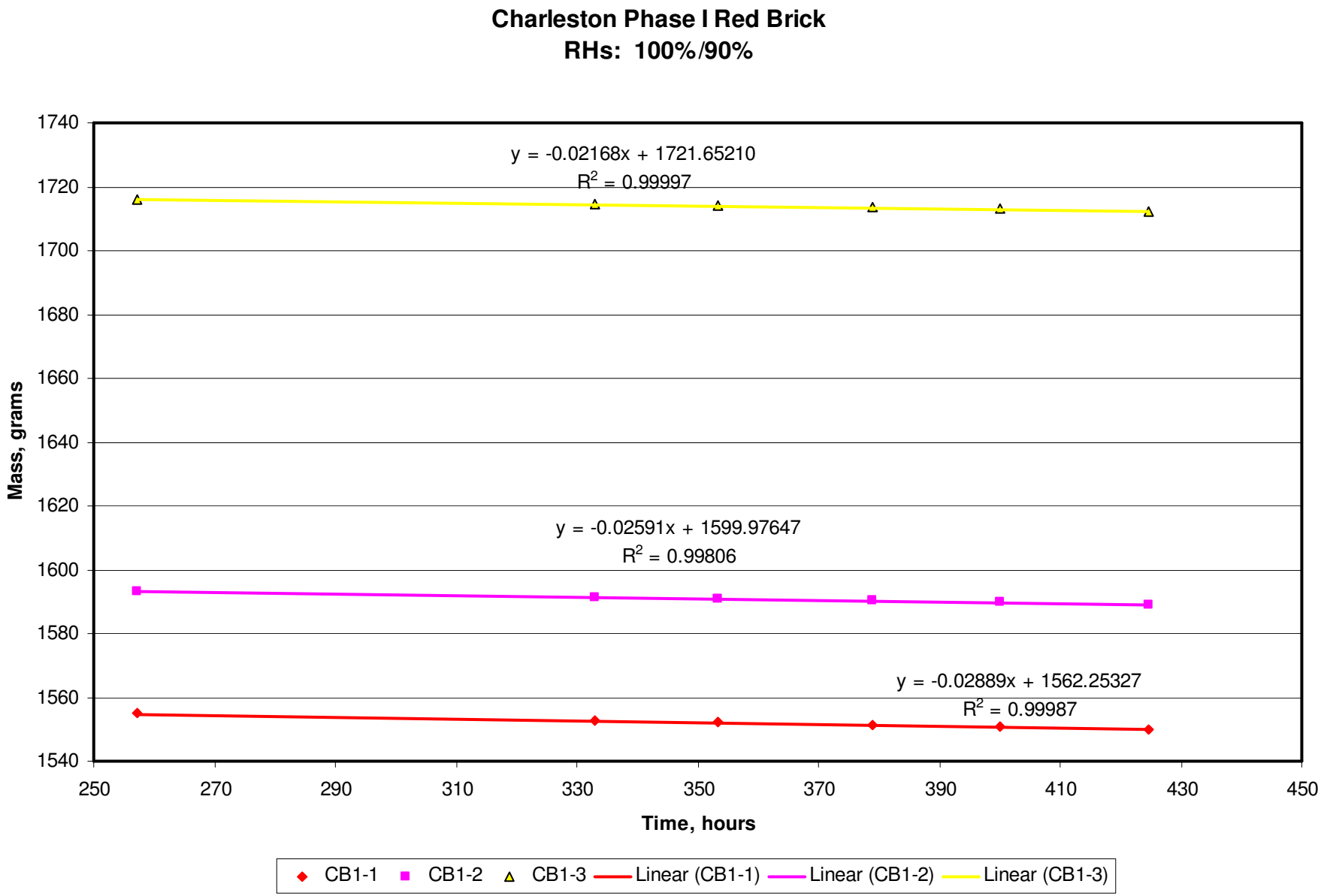
Charleston Phase I Red Brick
RHs: 100%/90%
y = -0.02168x + 1721.65210
R2 = 0.99997
y = -0.02591x + 1599.97647
R2 = 0.99806
y = -0.02889x + 1562.25327
R2 = 0.99987
Mass, grams
Time, hours
1740
1720
1700
1680
1660
1640
1620
1600
1580
1560
1540
250
270
290
310
330
350
370
390
410
430
450
CB1-1
CB1-2
CB1-3
Linear (CB1-1)
Linear (CB1-2)
Linear (CB1-3)

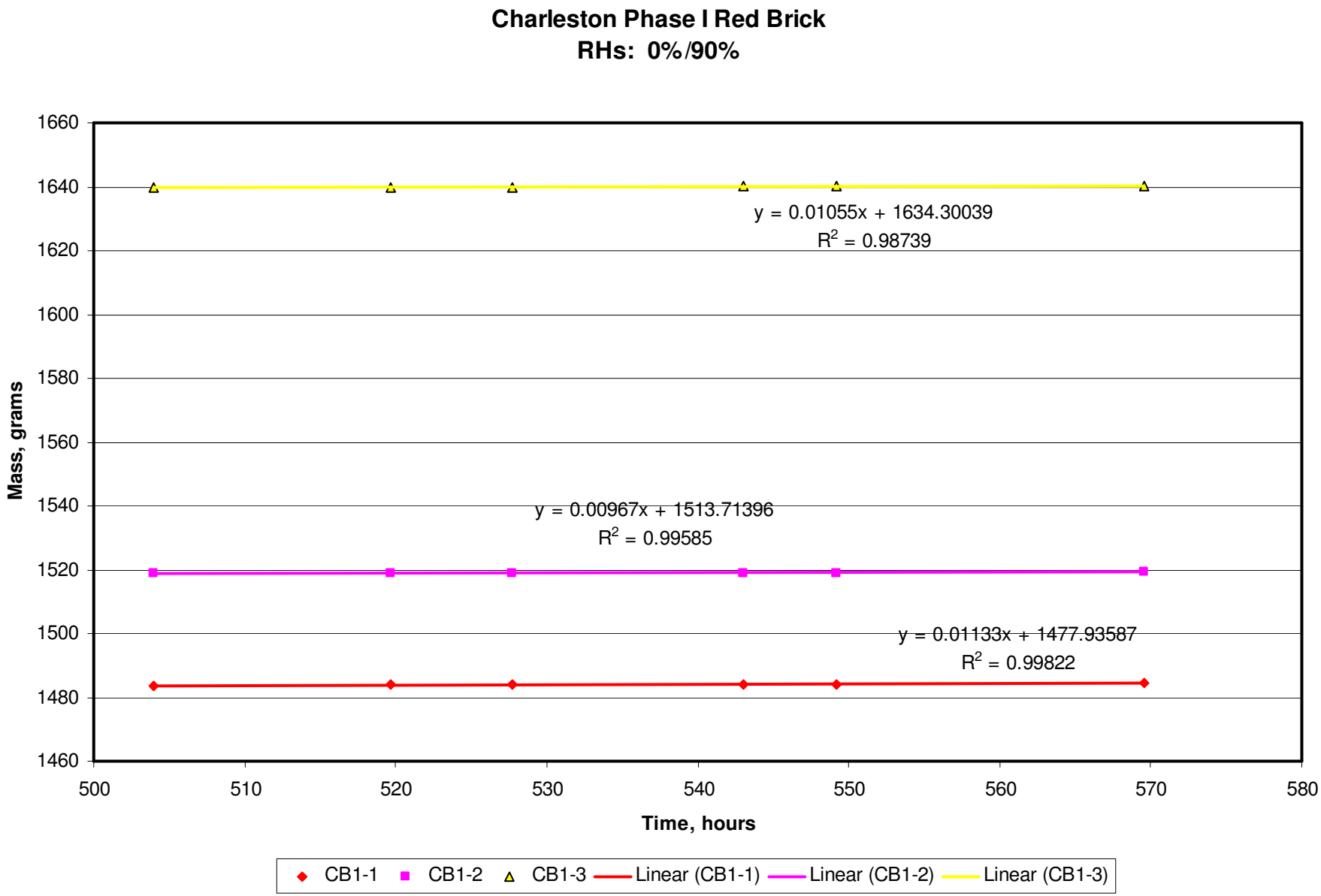
Charleston Phase I Red Brick
RHs: 0%/90%
Mass, grams
Time, hours
1660
1640
1620
1600
1580
1560
1540
1520
1500
1480
1460
500
510
520
530
540
550
560
570
580
y = 0.01055x + 1634.30039
R2 = 0.98739
y = 0.00967x + 1513.71396
R2 = 0.99585
y = 0.01133x + 1477.93587
R2 = 0.99822
CB1-1
CB1-2
CB1-3
Linear (CB1-1)
Linear (CB1-2)
Linear (CB1-3)

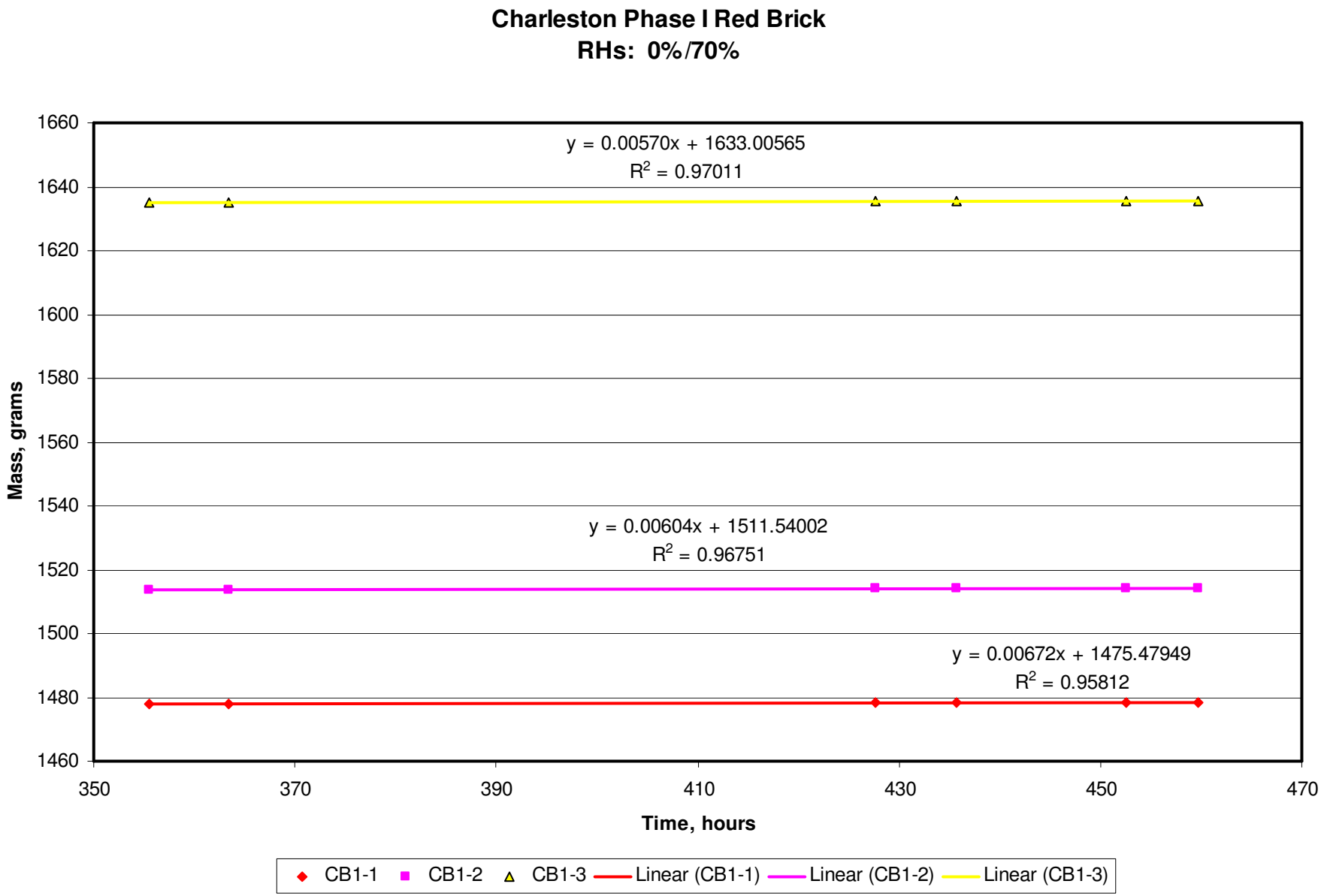
Charleston Phase I Red Brick
RHs: 0%/70%
y = 0.00570x + 1633.00565
R2 = 0.97011
y = 0.00604x + 1511.54002
R2 = 0.96751
y = 0.00672x + 1475.47949
R2 = 0.95812
Mass, grams
1660
1640
1620
1600
1580
1560
1540
1520
1500
1480
1460
350
370
390
410
430
450
470
Time, hours
CB1-1
CB1-2
CB1-3
Linear (CB1-1)
Linear (CB1-2)
Linear (CB1-3)

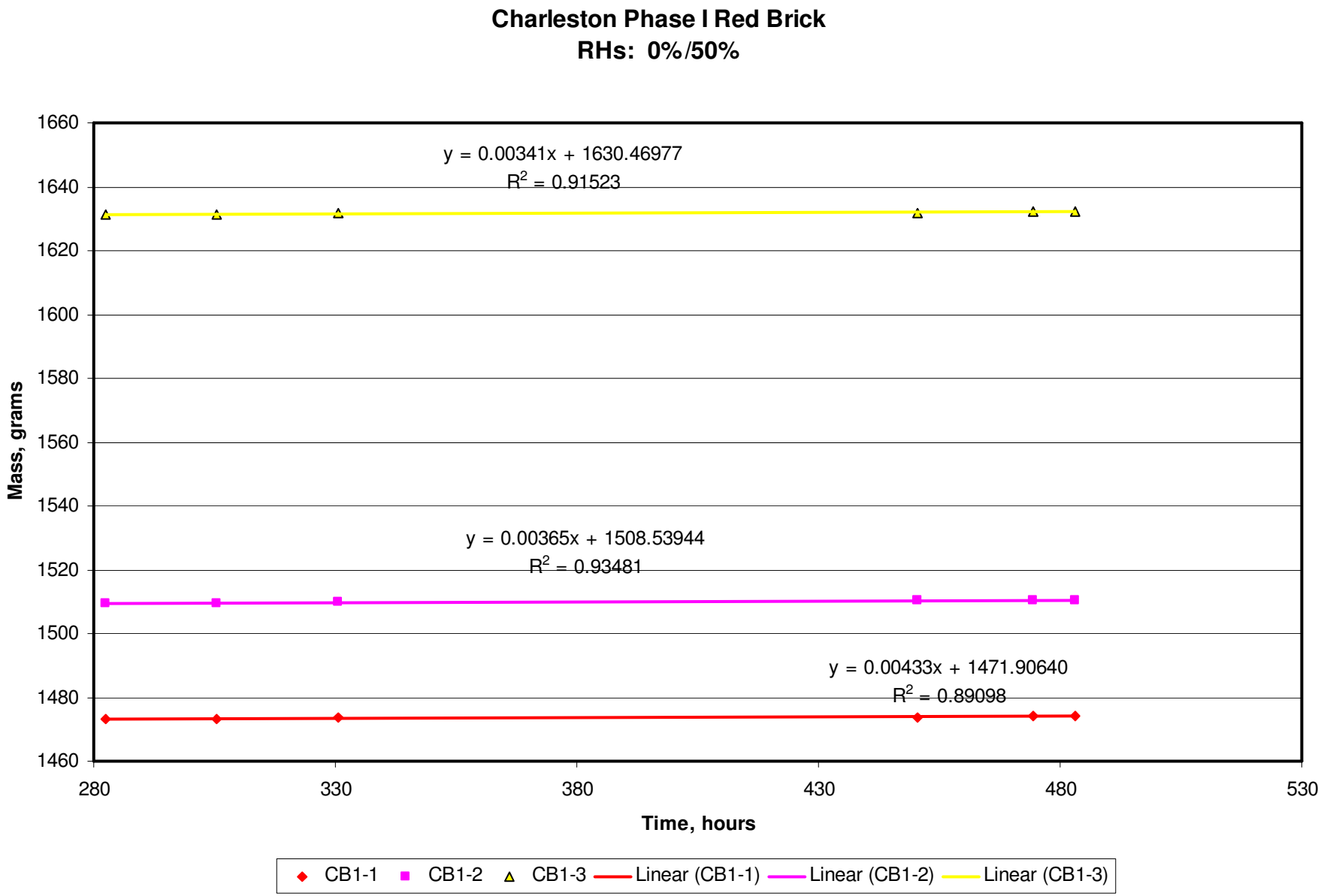
Charleston Phase I Red Brick
RHs: 0%/50%
y = 0.00341x + 1630.46977
R2 = 0.91523
y = 0.00365x + 1508.53944
R2 = 0.93481
y = 0.00433x + 1471.90640
R2 = 0.89098
Mass, grams
Time, hours
1660
1640
1620
1600
1580
1560
1540
1520
1500
1480
1460
280
330
380
430
480
530
CB1-1
CB1-2
CB1-3
Linear (CB1-1)
Linear (CB1-2)
Linear (CB1-3)

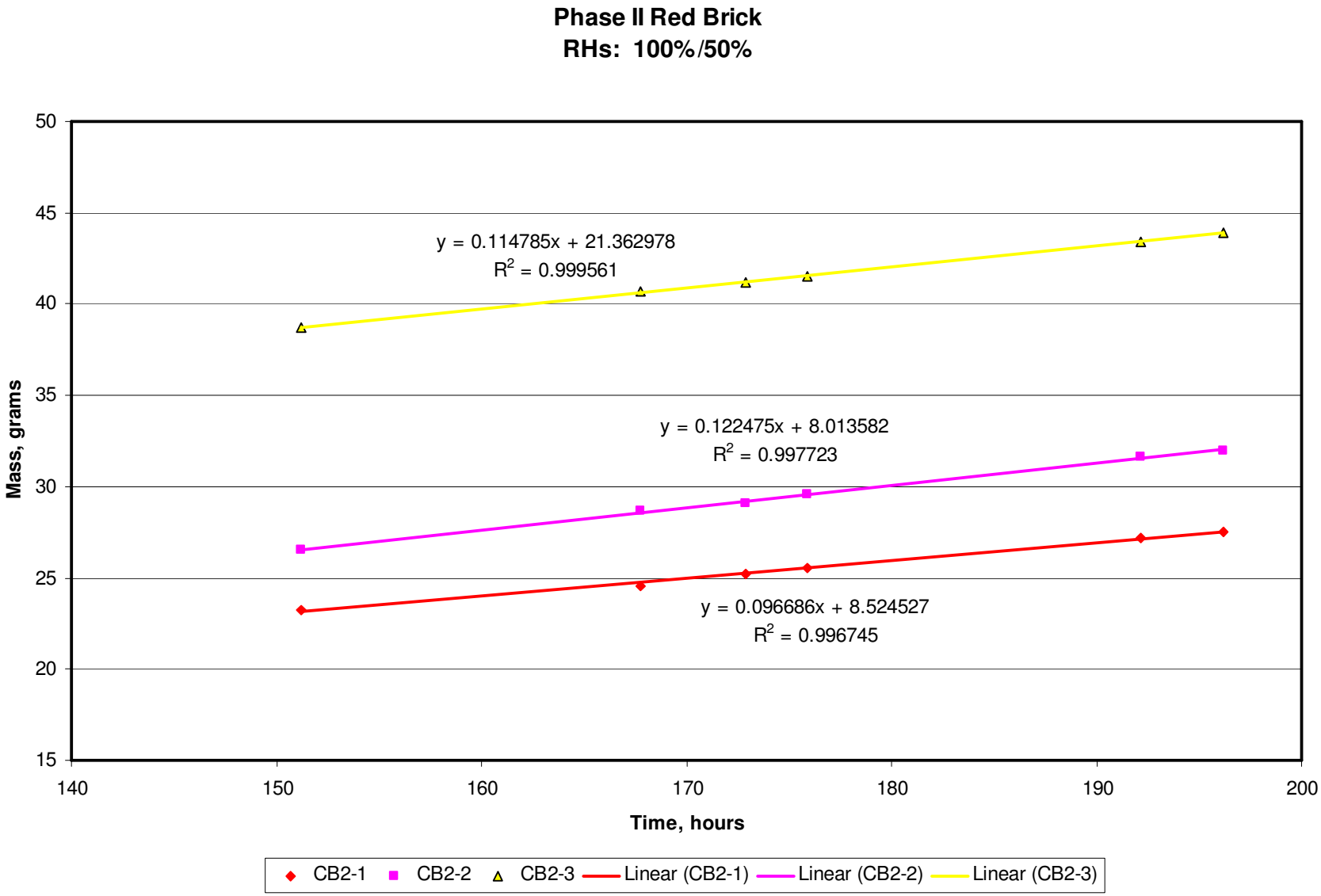
Phase II Red Brick
RHs: 100%/50%
y = 0.114785x + 21.362978
R2 = 0.999561
y = 0.122475x + 8.013582
R2 = 0.997723
y = 0.096686x + 8.524527
R2 = 0.996745
Mass, grams
Time, hours
50
45
40
35
30
25
20
15
140
150
160
170
180
190
200
CB2-1
CB2-2
CB2-3
Linear (CB2-1)
Linear (CB2-2)
Linear (CB2-3)

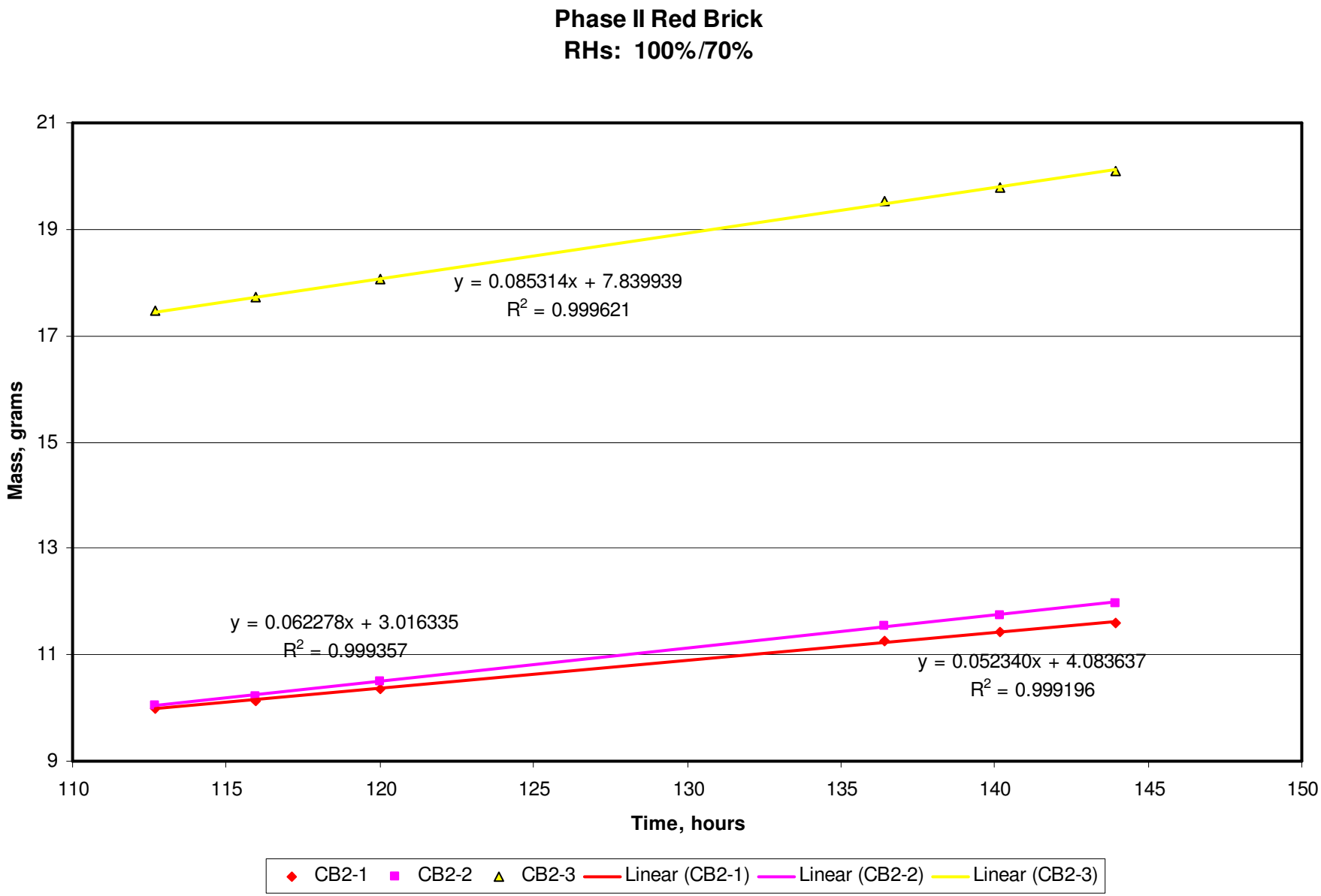
Phase II Red Brick
RHs: 100%/70%
Mass, grams
Time, hours
21
19
17
15
13
11
9
110
115
120
125
130
135
140
145
150
y = 0.085314x + 7.839939
R2 = 0.999621
y = 0.062278x + 3.016335
R2 = 0.999357
y = 0.052340x + 4.083637
R2 = 0.999196
CB2-1
CB2-2
CB2-3
Linear (CB2-1)
Linear (CB2-2)
Linear (CB2-3)

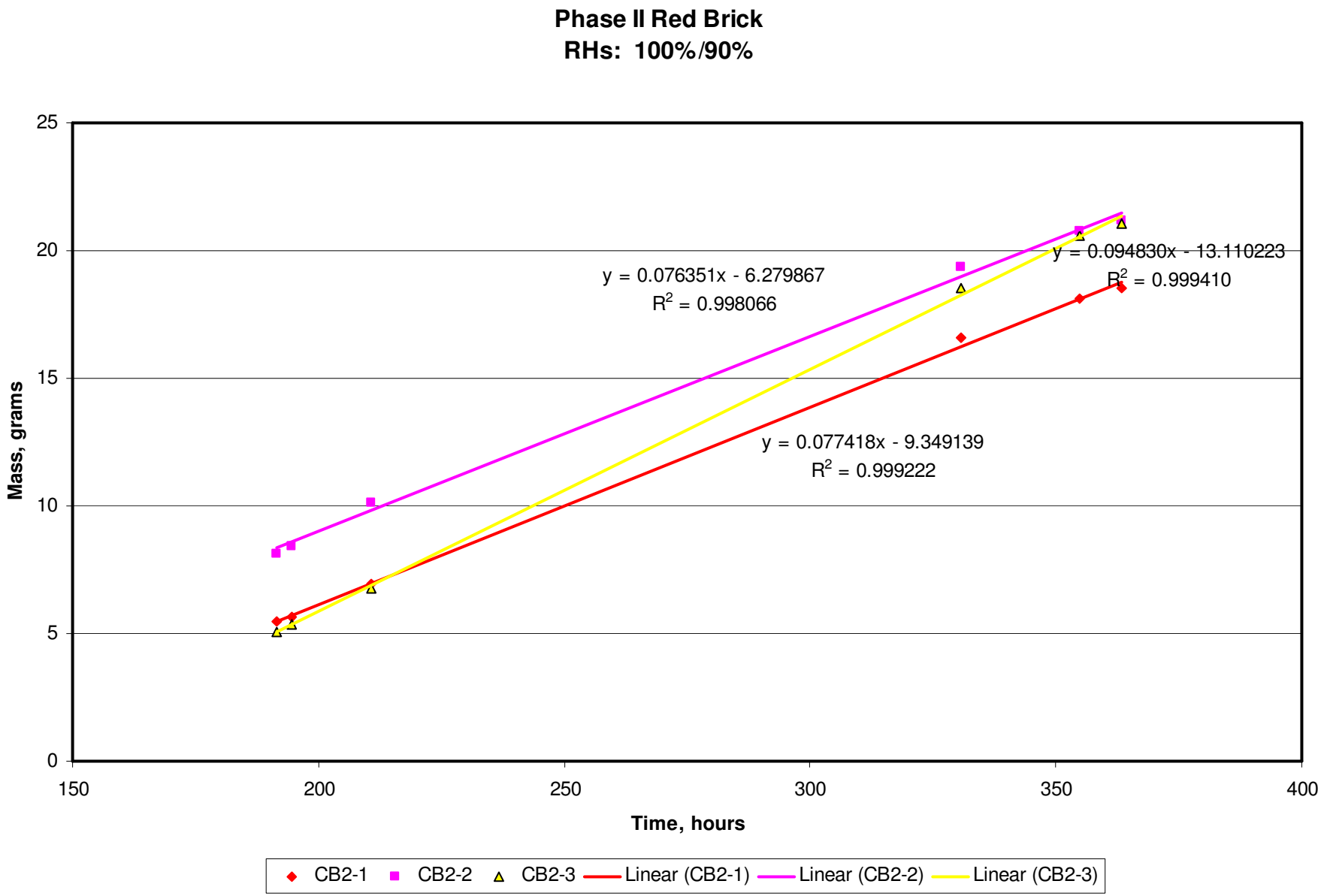
Phase II Red Brick
RHs: 100%/90%
Mass, grams
Time, hours
y = 0.076351x - 6.279867
R2 = 0.998066
y = 0.094830x - 13.110223
R2 = 0.999410
y = 0.077418x - 9.349139
R2 = 0.999222
CB2-1
CB2-2
CB2-3
Linear (CB2-1)
Linear (CB2-2)
Linear (CB2-3)

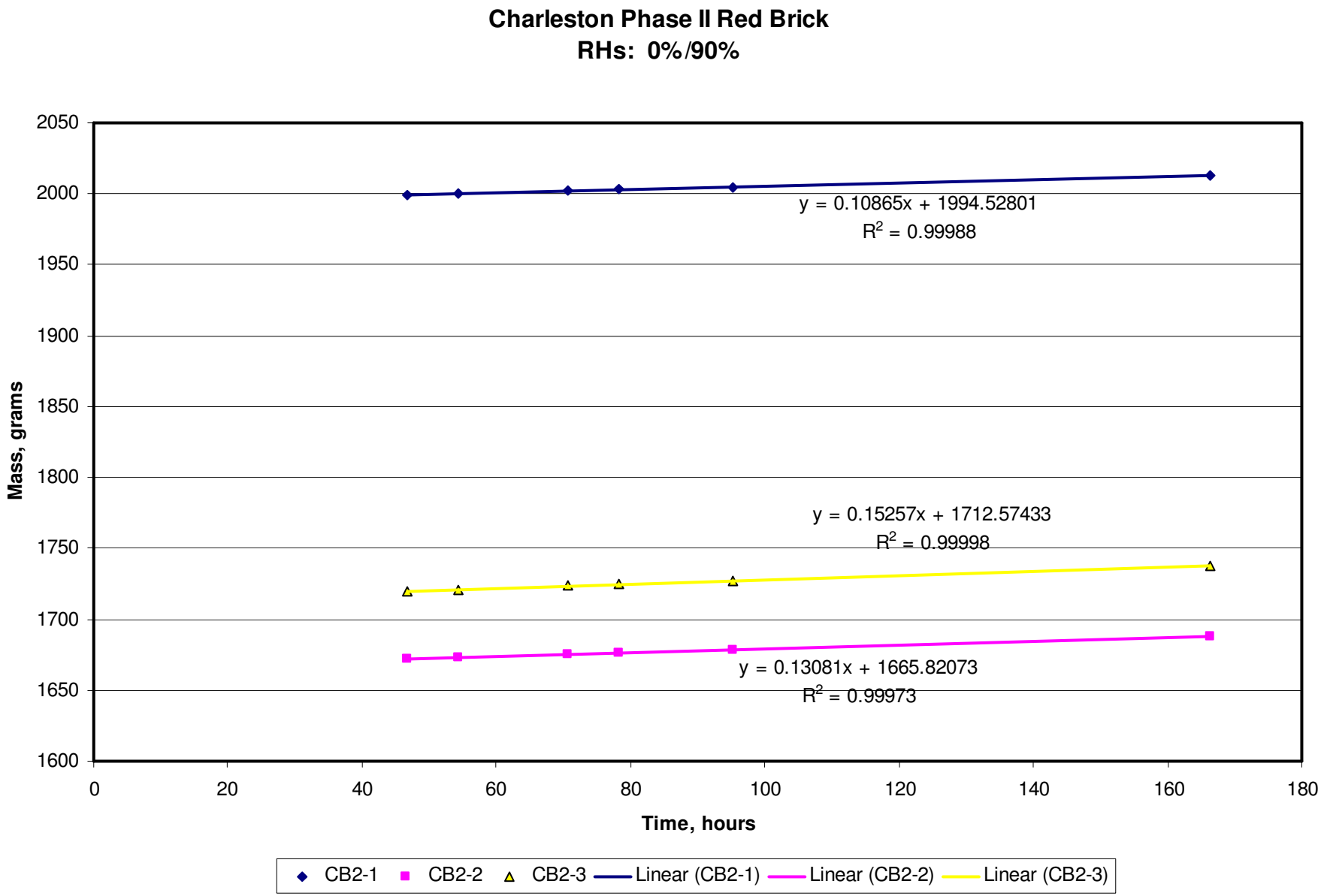
Charleston Phase II Red Brick
RHs: 0%/90%
Mass, grams
Time, hours
2050
2000
1950
1900
1850
1800
1750
1700
1650
1600
0
20
40
60
80
100
120
140
160
180
y = 0.10865x + 1994.52801
R2 = 0.99988
y = 0.15257x + 1712.57433
R2 = 0.99998
y = 0.13081x + 1665.82073
R2 = 0.99973
CB2-1
CB2-2
CB2-3
Linear (CB2-1)
Linear (CB2-2)
Linear (CB2-3)

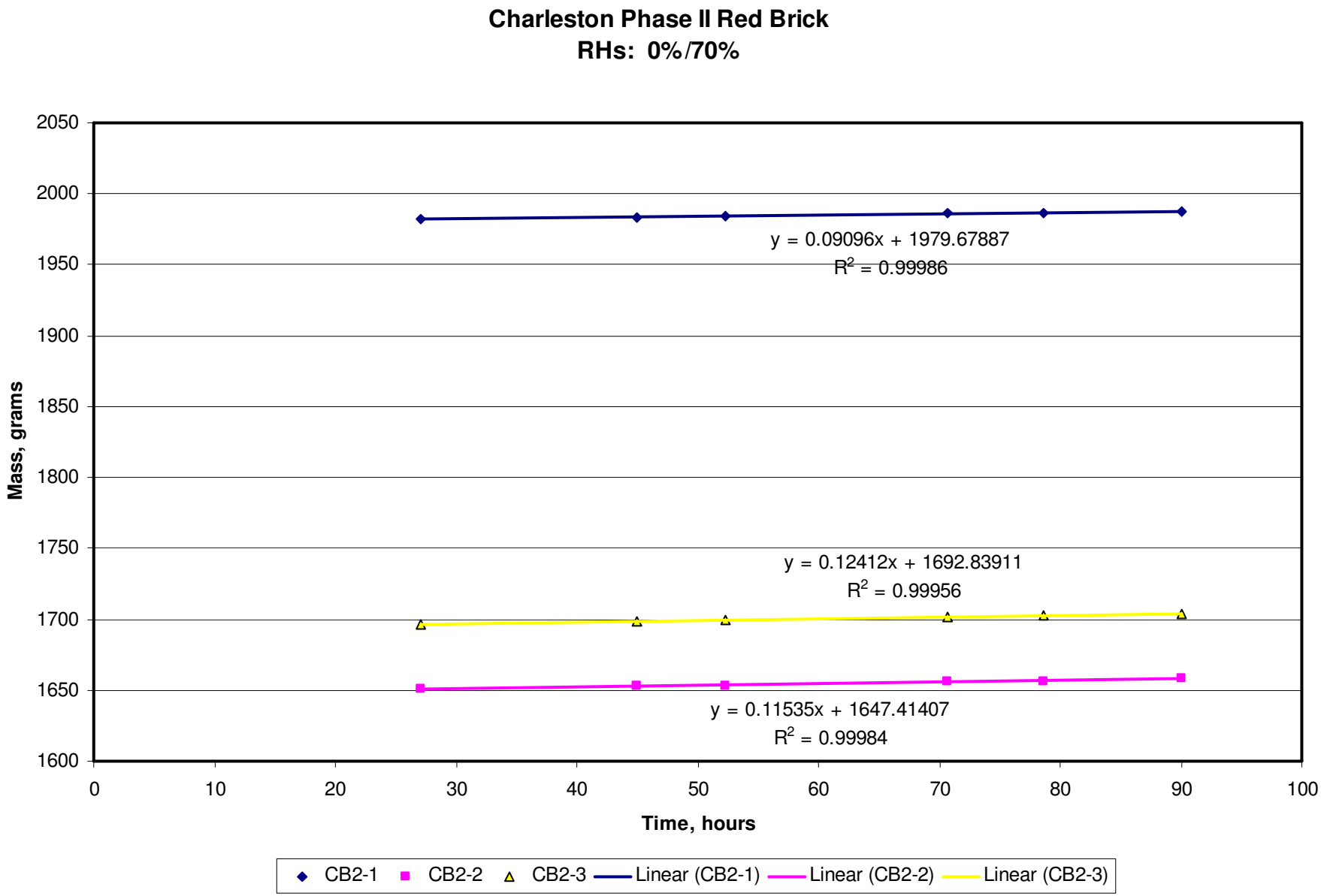
Charleston Phase II Red Brick
RHs: 0%/70%
Mass, grams
Time, hours
2050
2000
1950
1900
1850
1800
1750
1700
1650
1600
0
10
20
30
40
50
60
70
80
90
100
y = 0.09096x + 1979.67887
R2 = 0.99986
y = 0.12412x + 1692.83911
R2 = 0.99956
y = 0.11535x + 1647.41407
R2 = 0.99984
CB2-1
CB2-2
CB2-3
Linear (CB2-1)
Linear (CB2-2)
Linear (CB2-3)

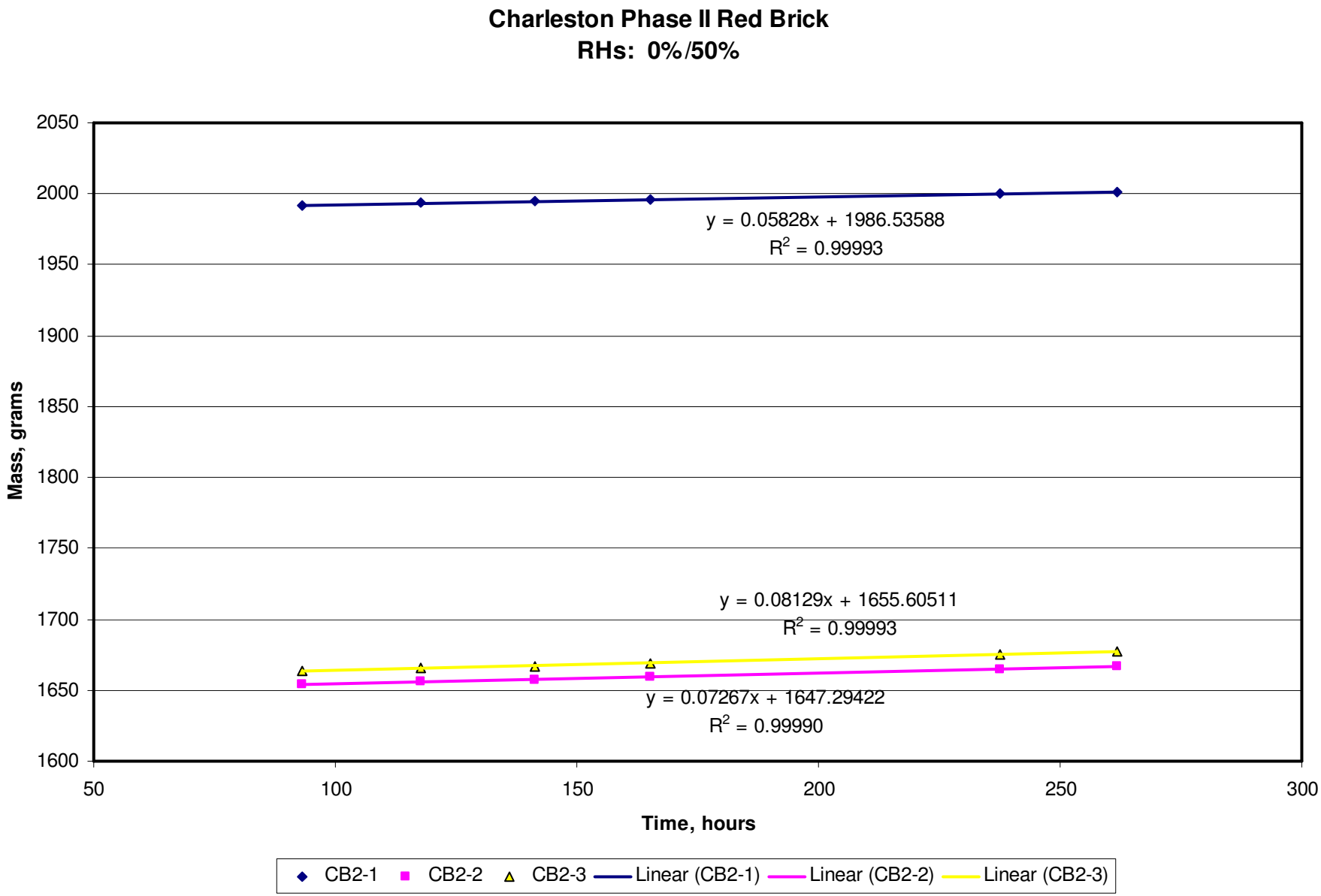
Charleston Phase II Red Brick
RHs: 0%/50%
Mass, grams
Time, hours
2050
2000
1950
1900
1850
1800
1750
1700
1650
1600
50
100
150
200
250
300
y = 0.05828x + 1986.53588
R2 = 0.99993
y = 0.08129x + 1655.60511
R2 = 0.99993
y = 0.07267x + 1647.29422
R2 = 0.99990
CB2-1
CB2-2
CB2-3
Linear (CB2-1)
Linear (CB2-2)
Linear (CB2-3)

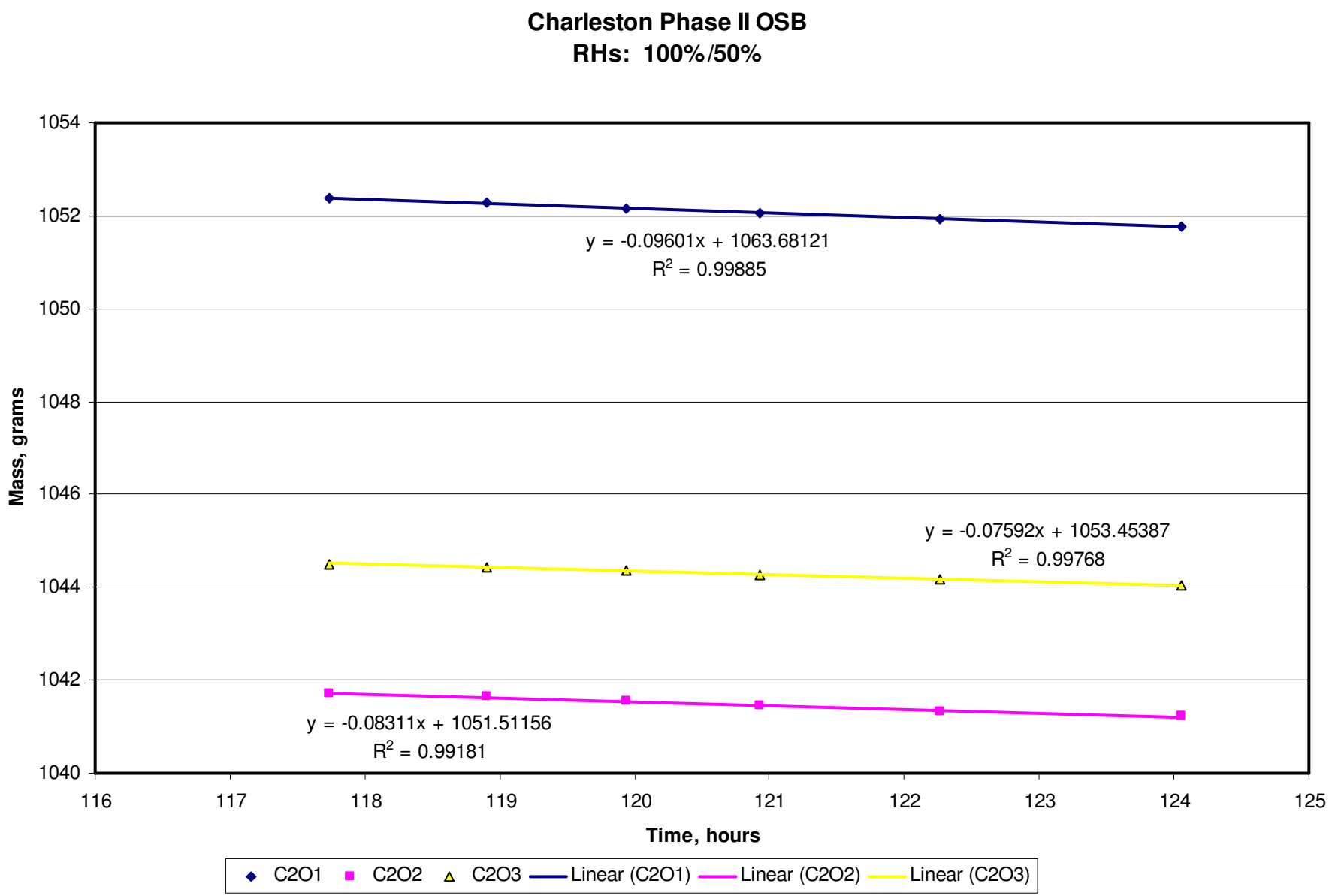
Charleston Phase II OSB
RHs: 100%/50%
Mass, grams
Time, hours
1054
1052
1050
1048
1046
1044
1042
1040
116
117
118
119
120
121
122
123
124
125
y = -0.09601x + 1063.68121
R2 = 0.99885
y = -0.07592x + 1053.45387
R2 = 0.99768
y = -0.08311x + 1051.51156
R2 = 0.99181
C2O1
C2O2
C2O3
Linear (C2O1)
Linear (C2O2)
Linear (C2O3)

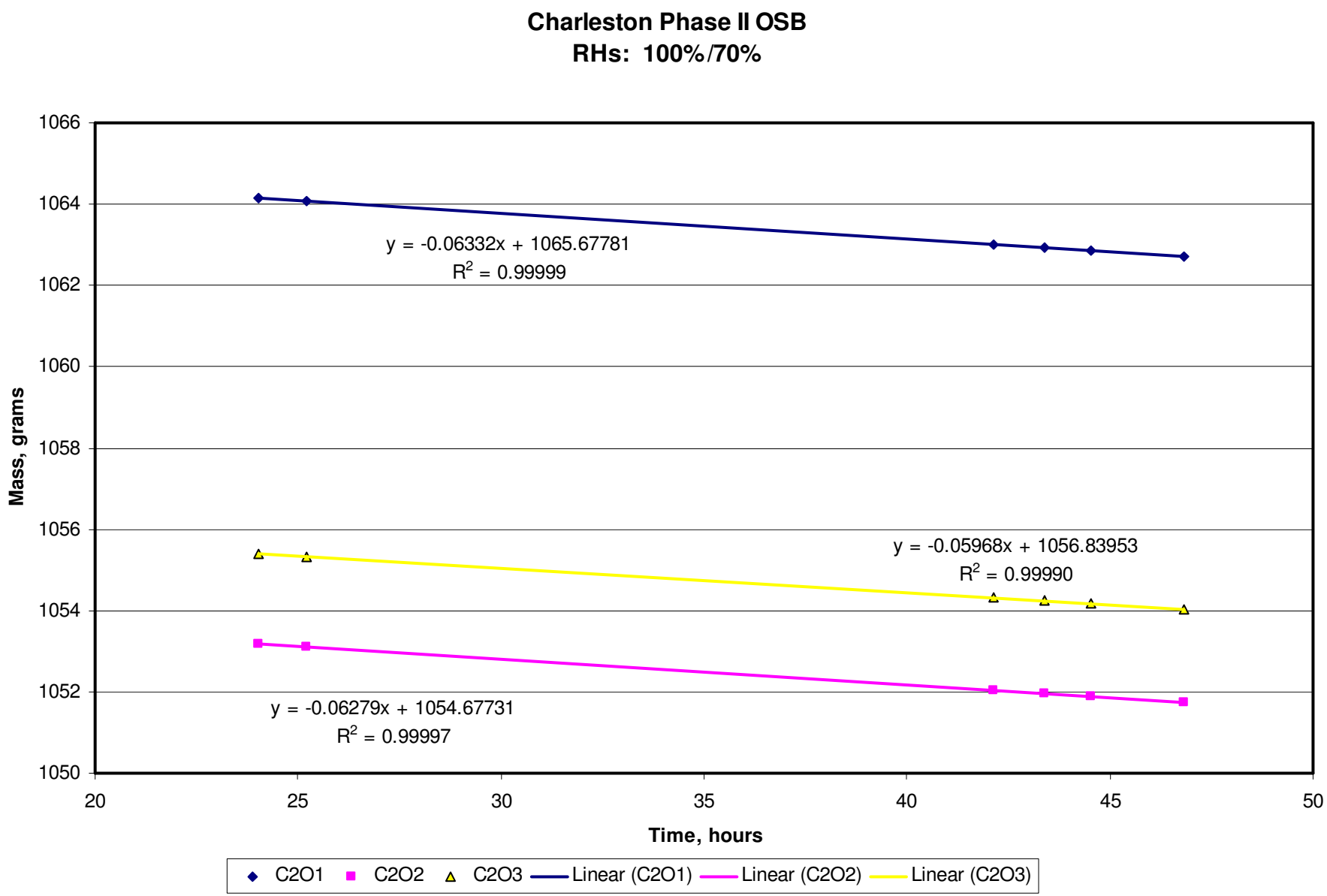
Charleston Phase II OSB
RHs: 100%/70%
1066
1064
1062
1060
1058
1056
1054
1052
1050
Mass, grams
20
25
30
35
40
45
50
Time, hours
y = -0.06332x + 1065.67781
R2 = 0.99999
y = -0.05968x + 1056.83953
R2 = 0.99990
y = -0.06279x + 1054.67731
R2 = 0.99997
C2O1
C2O2
C2O3
Linear (C2O1)
Linear (C2O2)
Linear (C2O3)

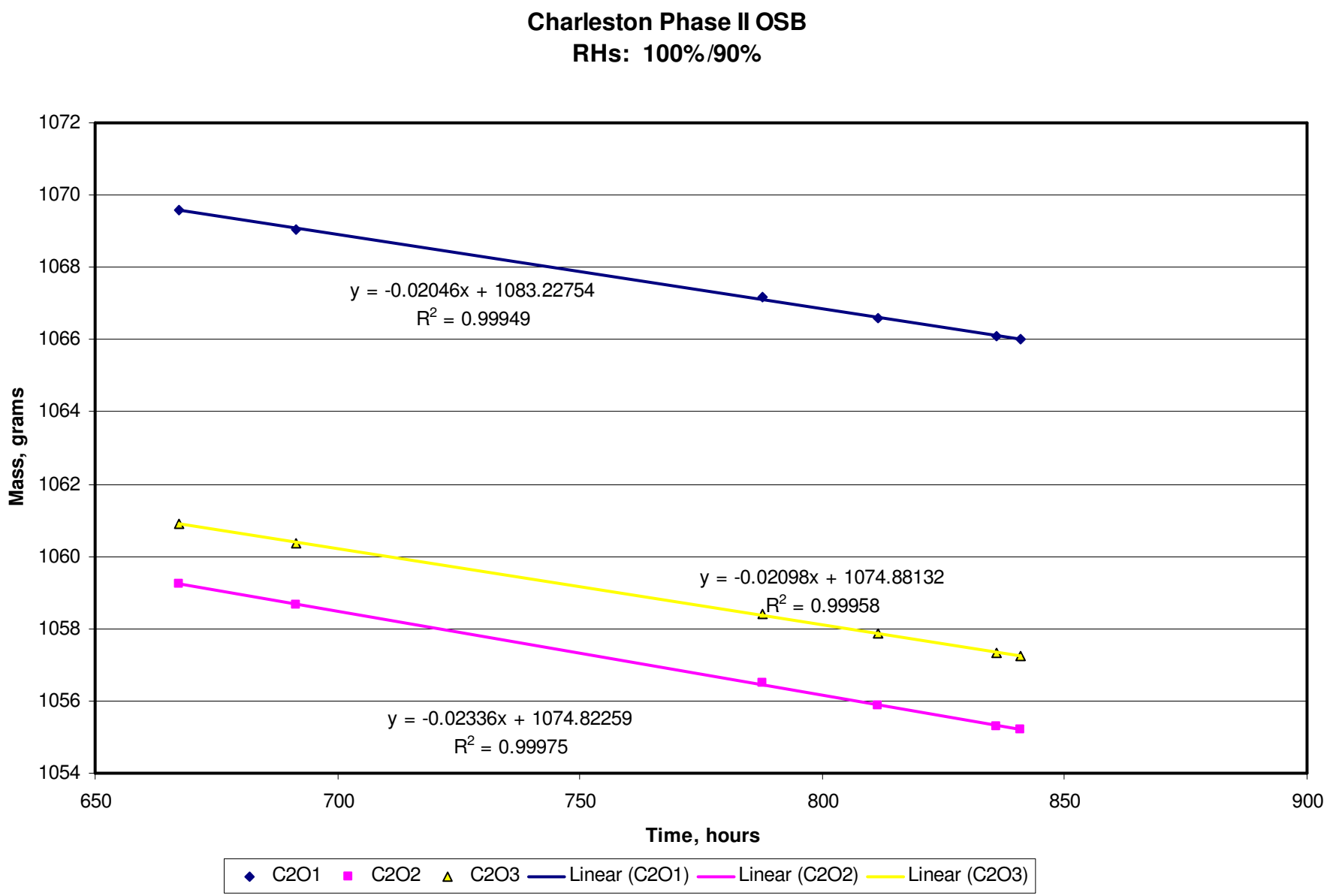
Charleston Phase II OSB
RHs: 100%/90%
Mass, grams
Time, hours
1072
1070
1068
1066
1064
1062
1060
1058
1056
1054
650
700
750
800
850
900
y = -0.02046x + 1083.22754
R2 = 0.99949
y = -0.02098x + 1074.88132
R2 = 0.99958
y = -0.02336x + 1074.82259
R2 = 0.99975
C2O1
C2O2
C2O3
Linear (C2O1)
Linear (C2O2)
Linear (C2O3)

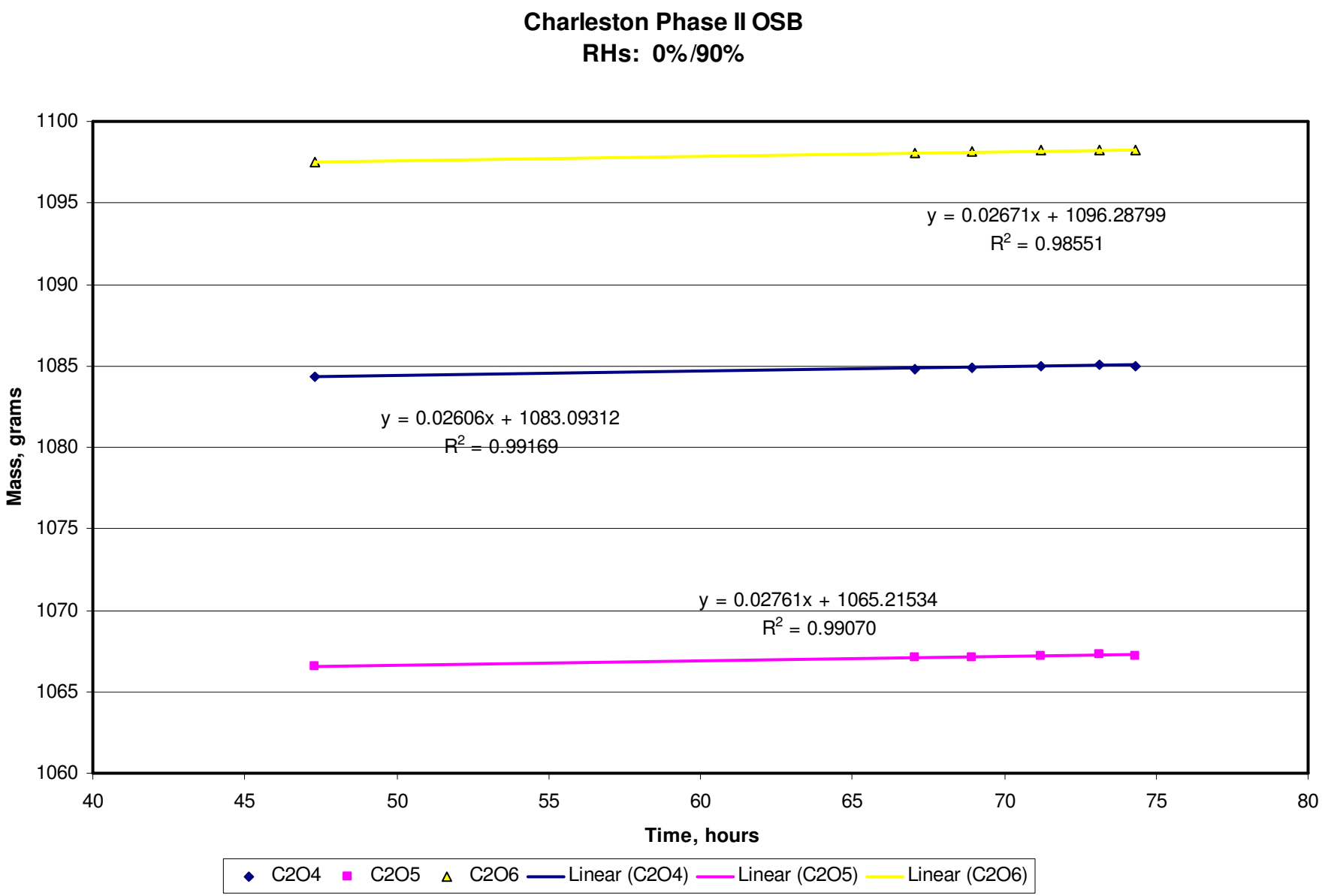
Charleston Phase II OSB
RHs: 0%/90%
Mass, grams
Time, hours
1100
1095
1090
1085
1080
1075
1070
1065
1060
40
45
50
55
60
65
70
75
80
y = 0.02671x + 1096.28799
R2 = 0.98551
y = 0.02606x + 1083.09312
R2 = 0.99169
y = 0.02761x + 1065.21534
R2 = 0.99070
C2O4
C2O5
C2O6
Linear (C2O4)
Linear (C2O5)
Linear (C2O6)

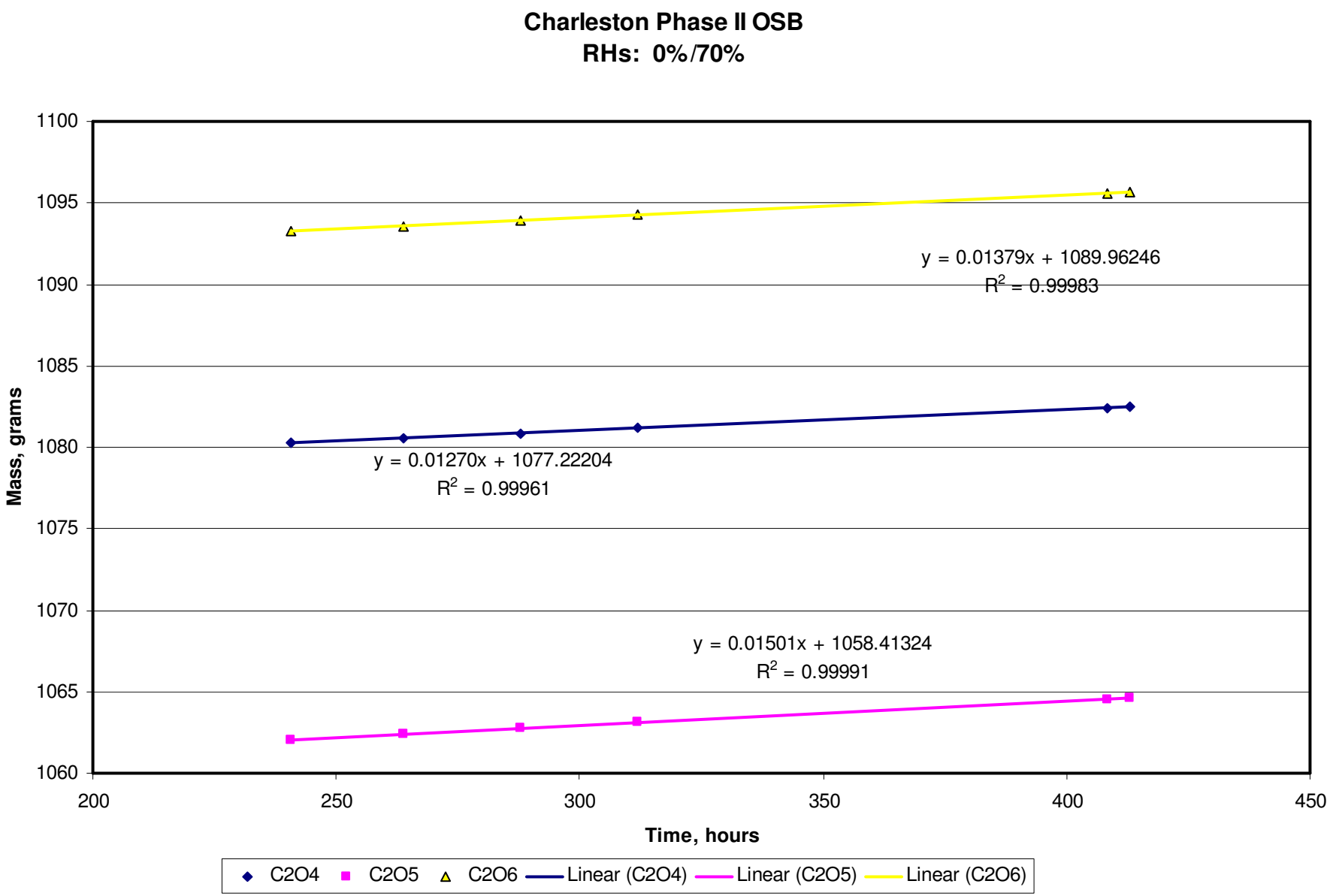
Charleston Phase II OSB
RHs: 0%/70%
Mass, grams
Time, hours
1100
1095
1090
1085
1080
1075
1070
1065
1060
200
250
300
350
400
450
y = 0.01379x + 1089.96246
R2 = 0.99983
y = 0.01270x + 1077.22204
R2 = 0.99961
y = 0.01501x + 1058.41324
R2 = 0.99991
C2O4
C2O5
C2O6
Linear (C2O4)
Linear (C2O5)
Linear (C2O6)

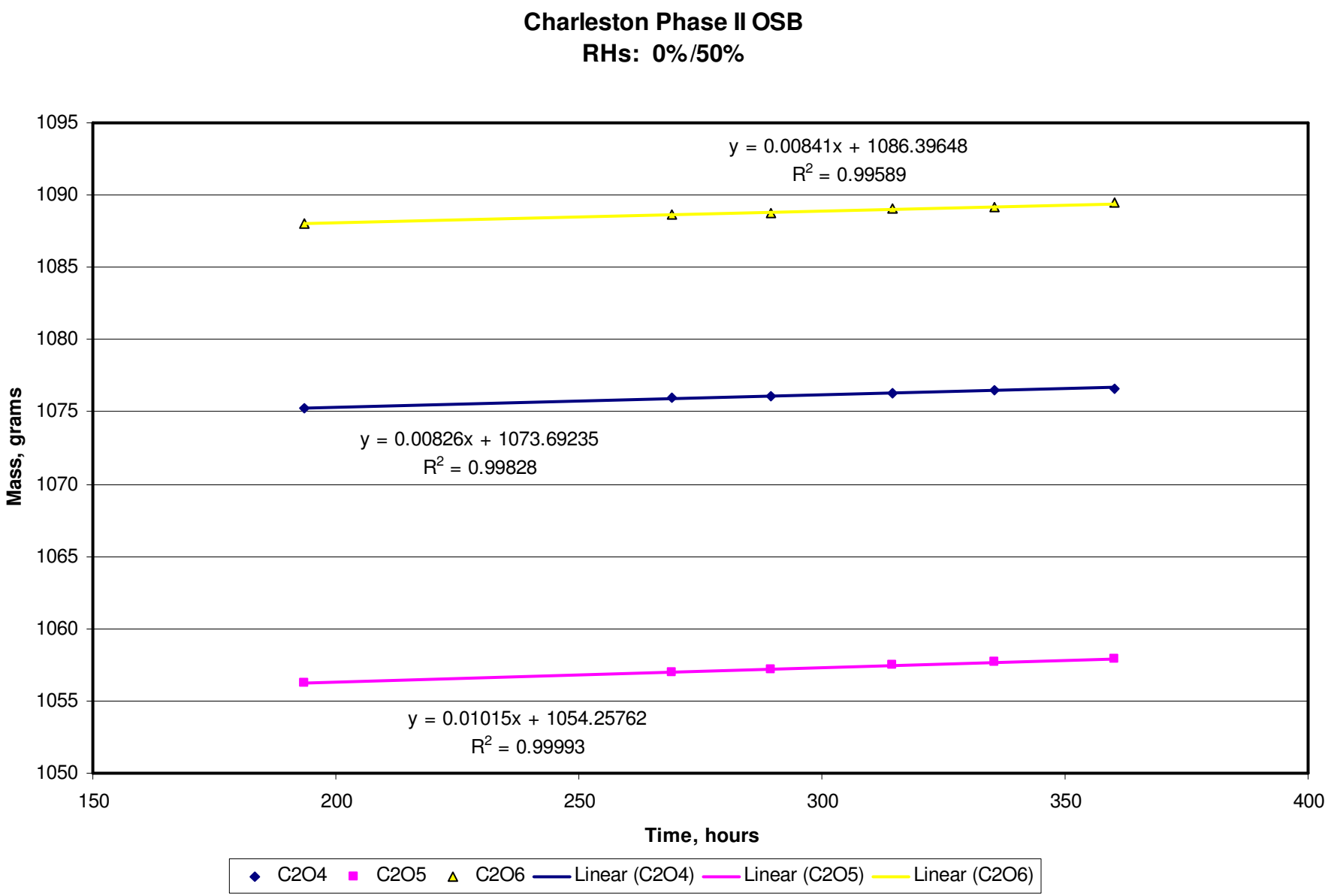
Charleston Phase II OSB
RHs: 0%/50%
y = 0.00841x + 1086.39648
R2 = 0.99589
y = 0.00826x + 1073.69235
R2 = 0.99828
y = 0.01015x + 1054.25762
R2 = 0.99993
Mass, grams
Time, hours
1095
1090
1085
1080
1075
1070
1065
1060
1055
1050
150
200
250
300
350
400
C2O4
C2O5
C2O6
Linear (C2O4)
Linear (C2O5)
Linear (C2O6)

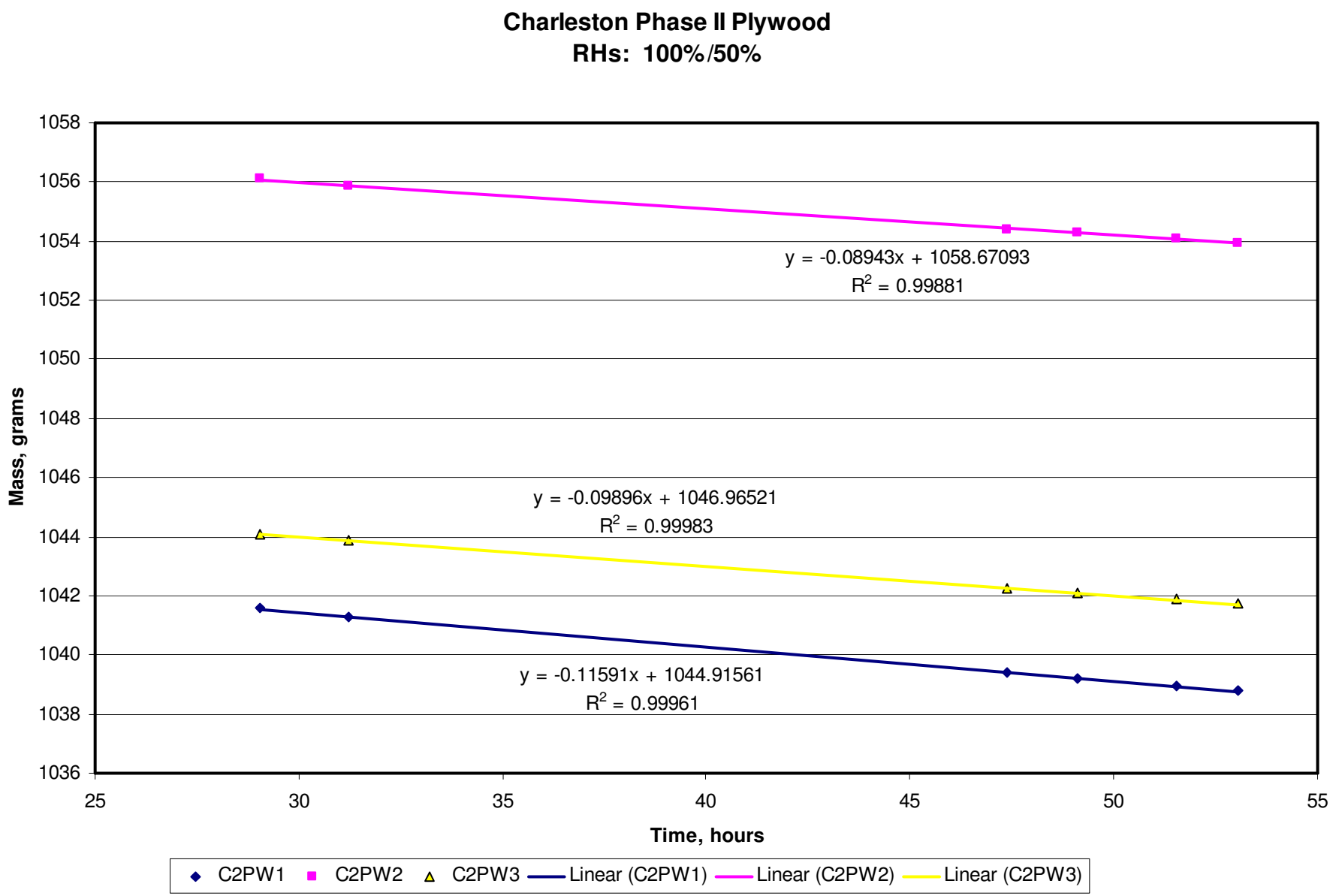
Charleston Phase II Plywood
RHs: 100%/50%
Mass, grams
Time, hours
1058
1056
1054
1052
1050
1048
1046
1044
1042
1040
1038
1036
25
30
35
40
45
50
55
y = -0.08943x + 1058.67093
R2 = 0.99881
y = -0.09896x + 1046.96521
R2 = 0.99983
y = -0.11591x + 1044.91561
R2 = 0.99961
C2PW1
C2PW2
C2PW3
Linear (C2PW1)
Linear (C2PW2)
Linear (C2PW3)

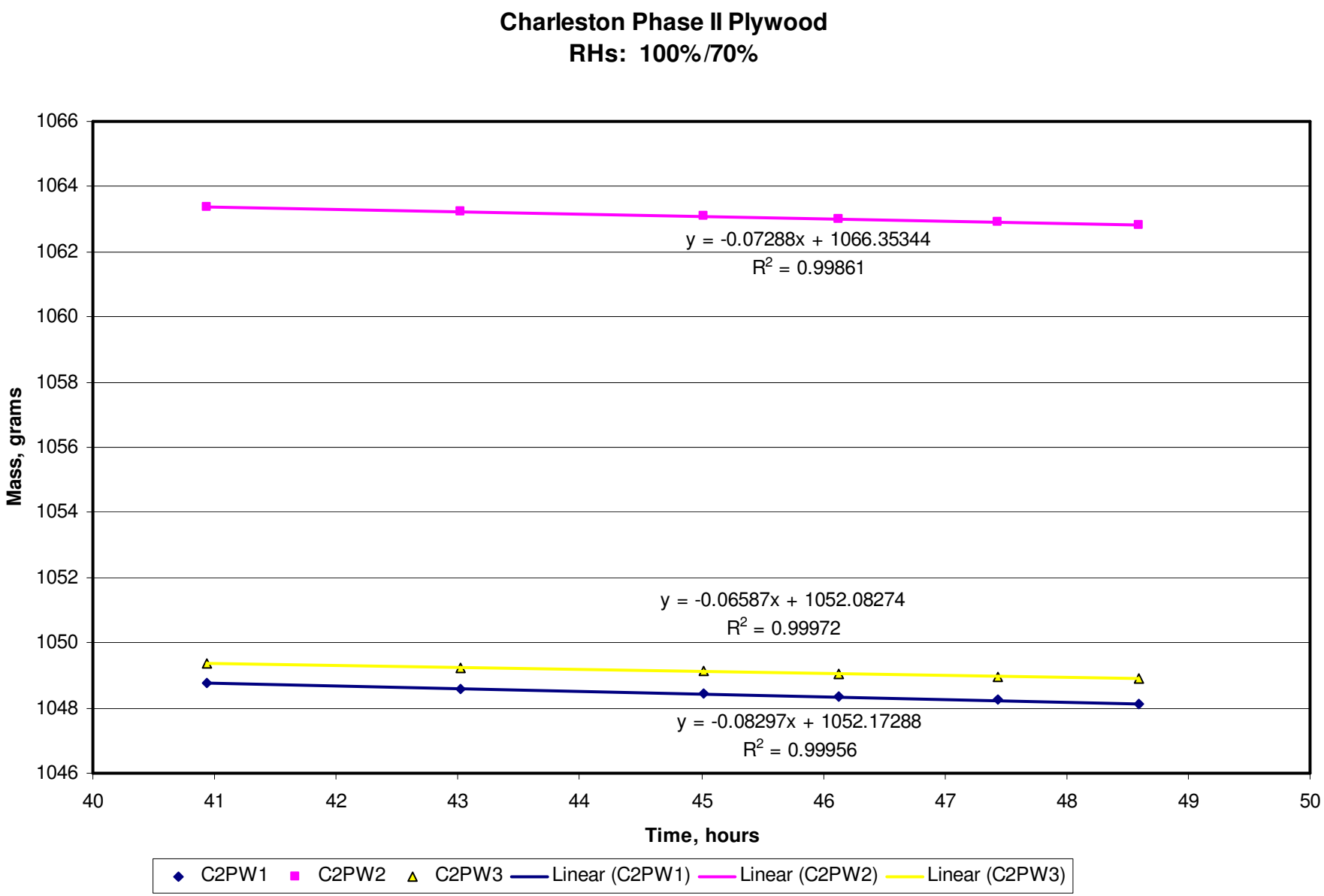
Charleston Phase II Plywood
RHs: 100%/70%
Mass, grams
1066
1064
1062
1060
1058
1056
1054
1052
1050
1048
1046
40
41
42
43
44
45
46
47
48
49
50
Time, hours
y = -0.07288x + 1066.35344
R2 = 0.99861
y = -0.06587x + 1052.08274
R2 = 0.99972
y = -0.08297x + 1052.17288
R2 = 0.99956
C2PW1
C2PW2
C2PW3
Linear (C2PW1)
Linear (C2PW2)
Linear (C2PW3)

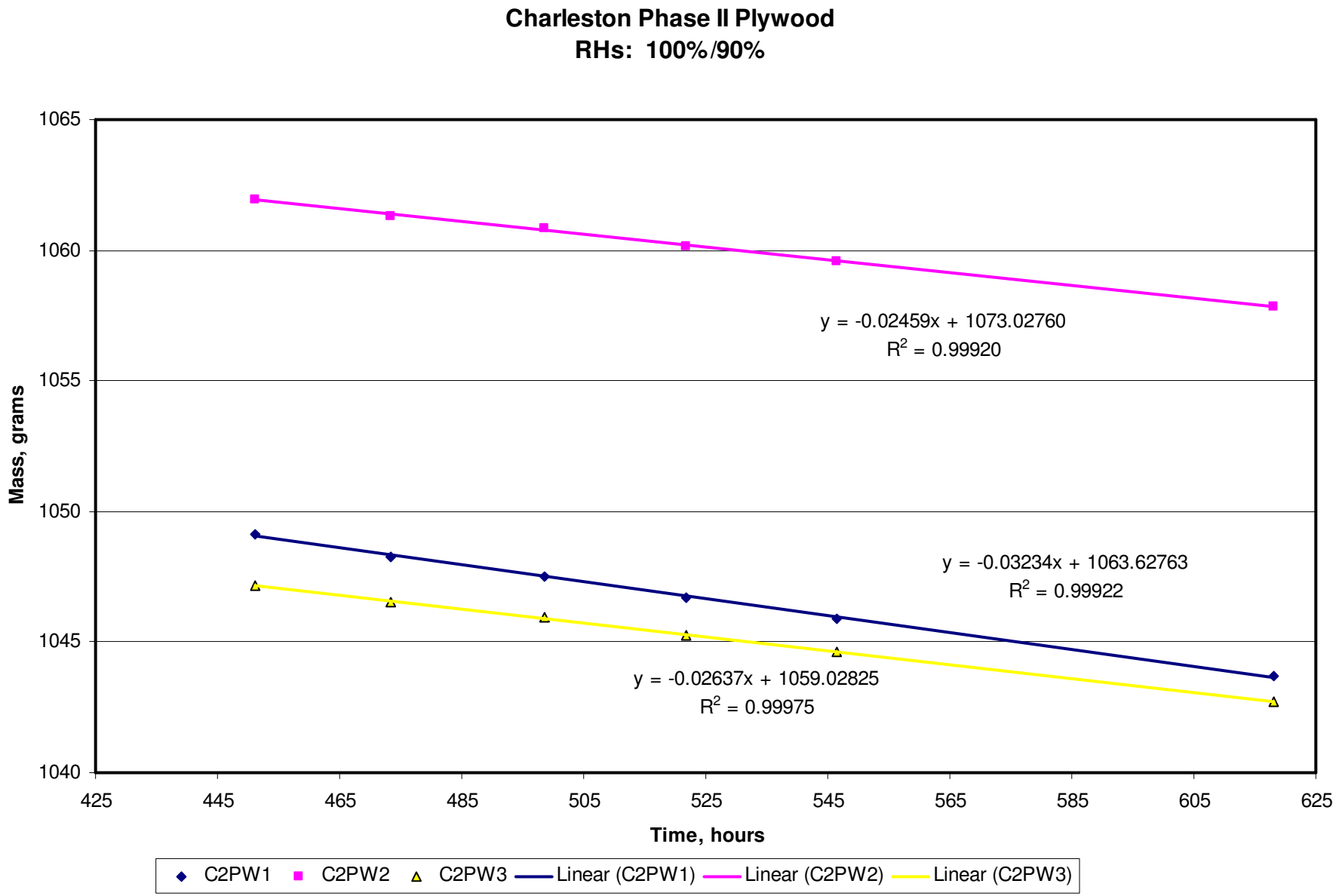
Charleston Phase II Plywood
RHs: 100%/90%
Mass, grams
1065
1060
1055
1050
1045
1040
425
445
465
485
505
525
545
565
585
605
625
Time, hours
y = -0.02459x + 1073.02760
R2 = 0.99920
y = -0.03234x + 1063.62763
R2 = 0.99922
y = -0.02637x + 1059.02825
R2 = 0.99975
C2PW1
C2PW2
C2PW3
Linear (C2PW1)
Linear (C2PW2)
Linear (C2PW3)

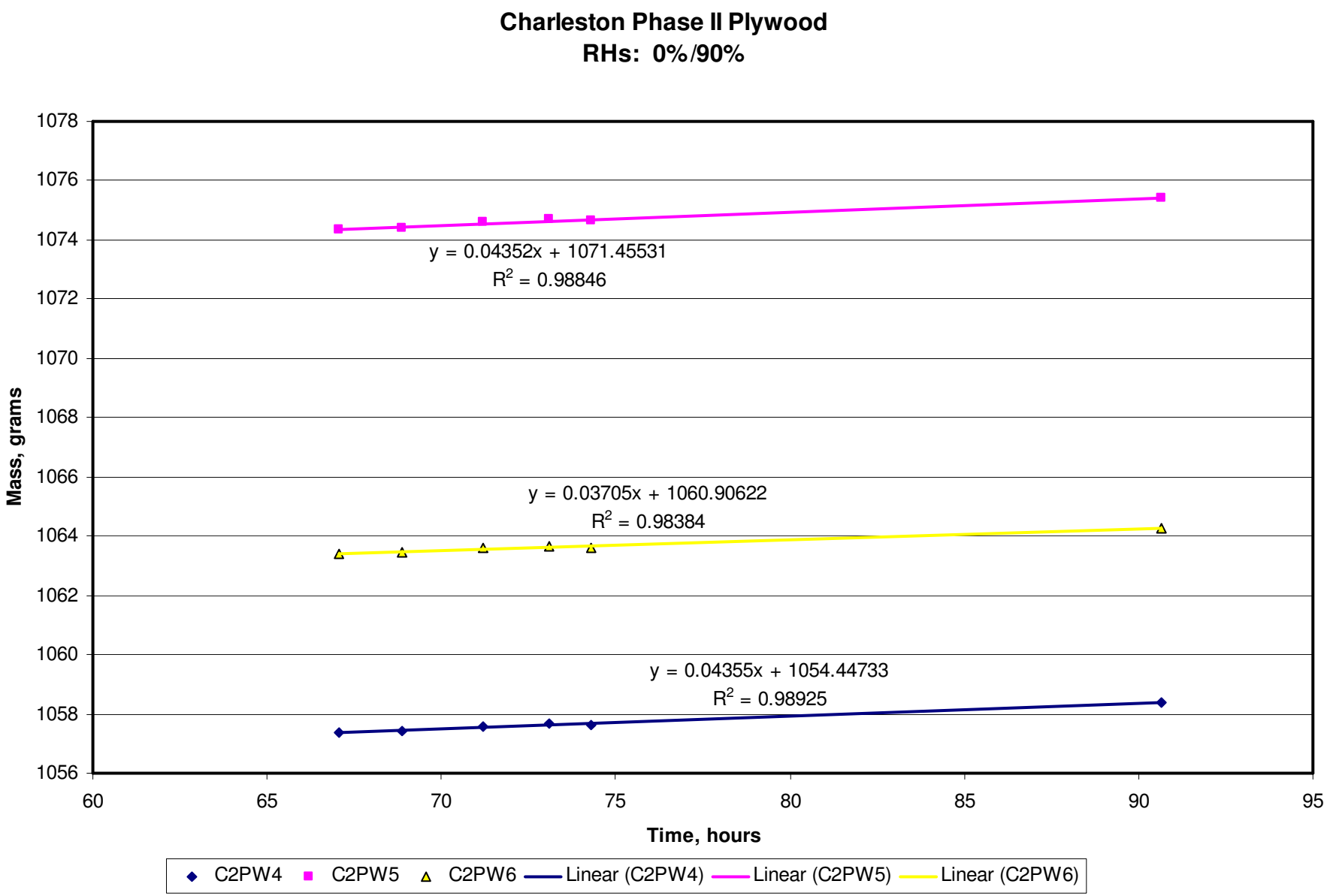
Charleston Phase II Plywood
RHs: 0%/90%
Mass, grams
1078
1076
1074
1072
1070
1068
1066
1064
1062
1060
1058
1056
60
65
70
75
80
85
90
95
Time, hours
y = 0.04352x + 1071.45531
R2 = 0.98846
y = 0.03705x + 1060.90622
R2 = 0.98384
y = 0.04355x + 1054.44733
R2 = 0.98925
C2PW4
C2PW5
C2PW6
Linear (C2PW4)
Linear (C2PW5)
Linear (C2PW6)

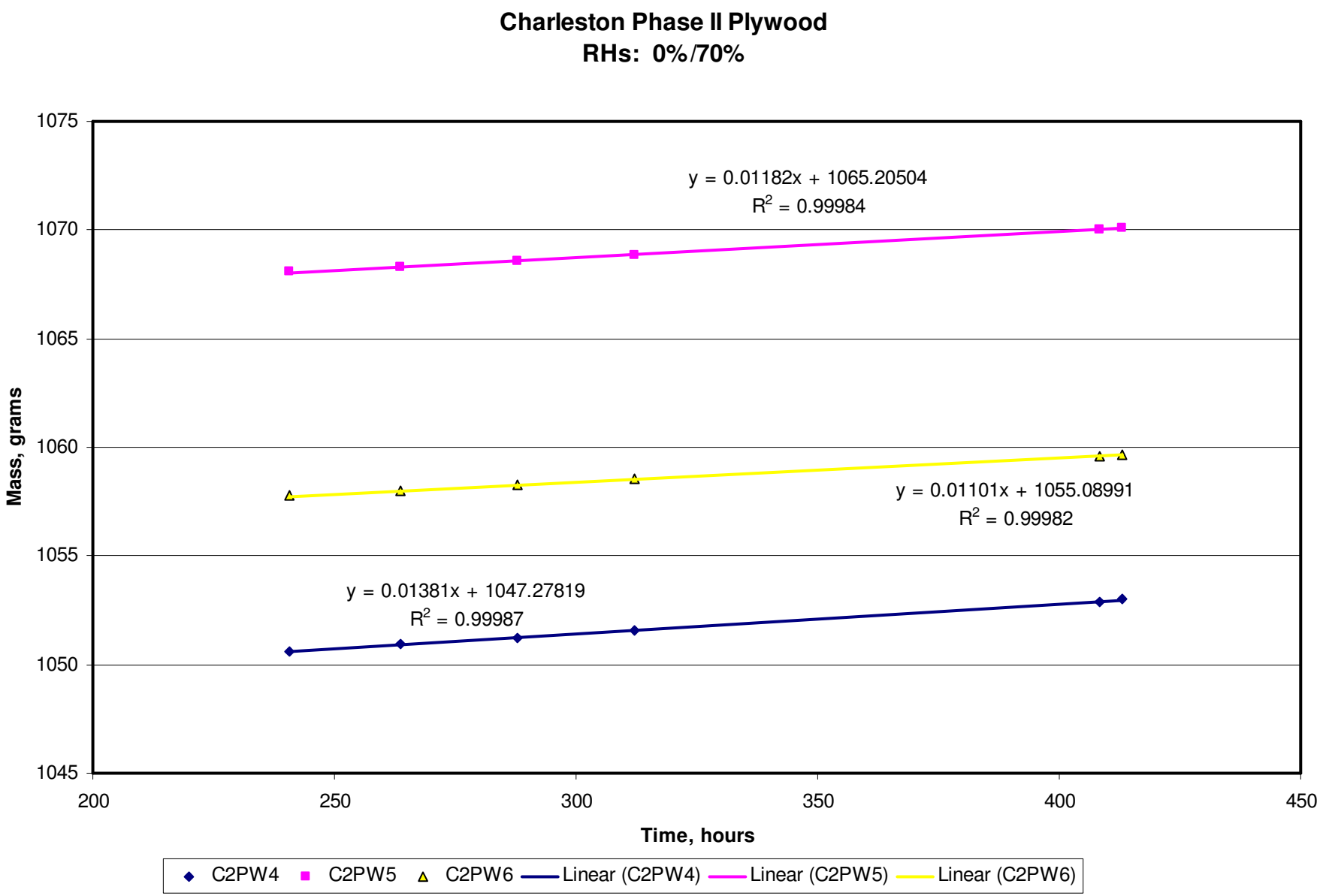
Charleston Phase II Plywood
RHs: 0%/70%
y = 0.01182x + 1065.20504
R2 = 0.99984
y = 0.01101x + 1055.08991
R2 = 0.99982
y = 0.01381x + 1047.27819
R2 = 0.99987
Mass, grams
1075
1070
1065
1060
1055
1050
1045
200
250
300
350
400
450
Time, hours
C2PW4
C2PW5
C2PW6
Linear (C2PW4)
Linear (C2PW5)
Linear (C2PW6)

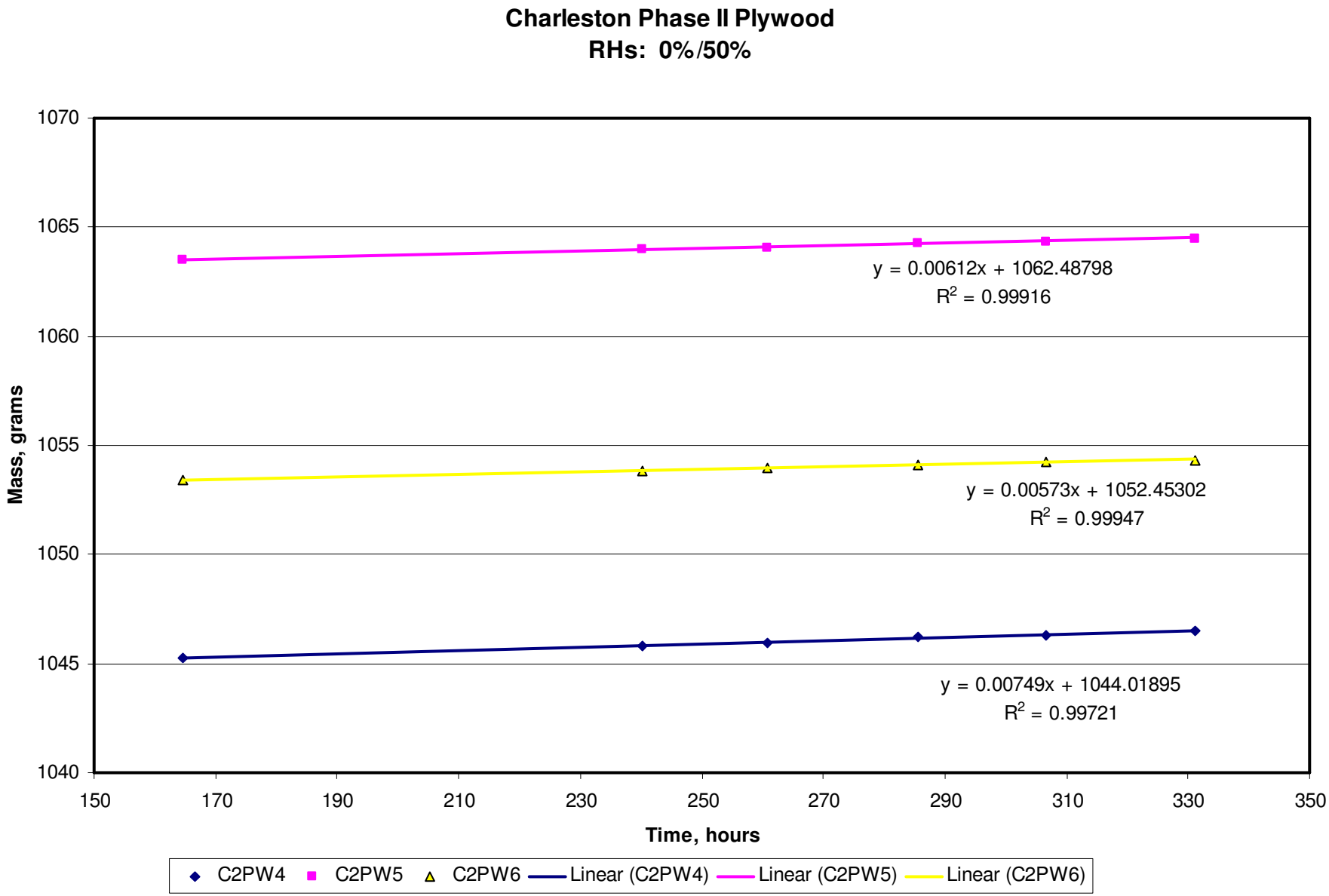
Charleston Phase II Plywood
RHs: 0%/50%
Mass, grams
1070
1065
1060
1055
1050
1045
1040
150
170
190
210
230
250
270
290
310
330
350
Time, hours
y = 0.00612x + 1062.48798
R2 = 0.99916
y = 0.00573x + 1052.45302
R2 = 0.99947
y = 0.00749x + 1044.01895
R2 = 0.99721
C2PW4
C2PW5
C2PW6
Linear (C2PW4)
Linear (C2PW5)
Linear (C2PW6)

Charleston Phase II WRB Coating on Plywood
RHs: 0% /90%

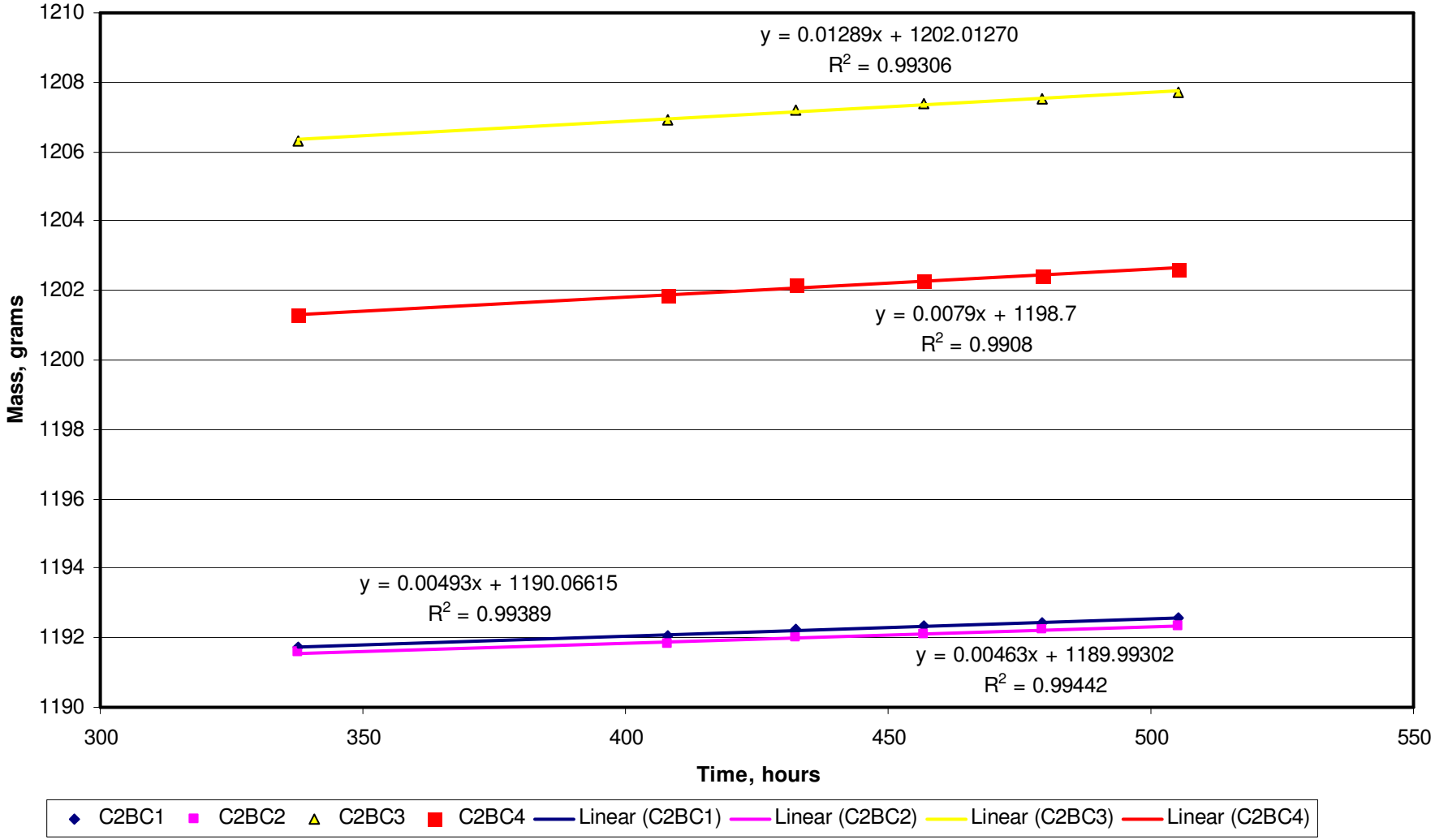

Charleston Phase II WRB Coating on Plywood
RHs: 0% /70%

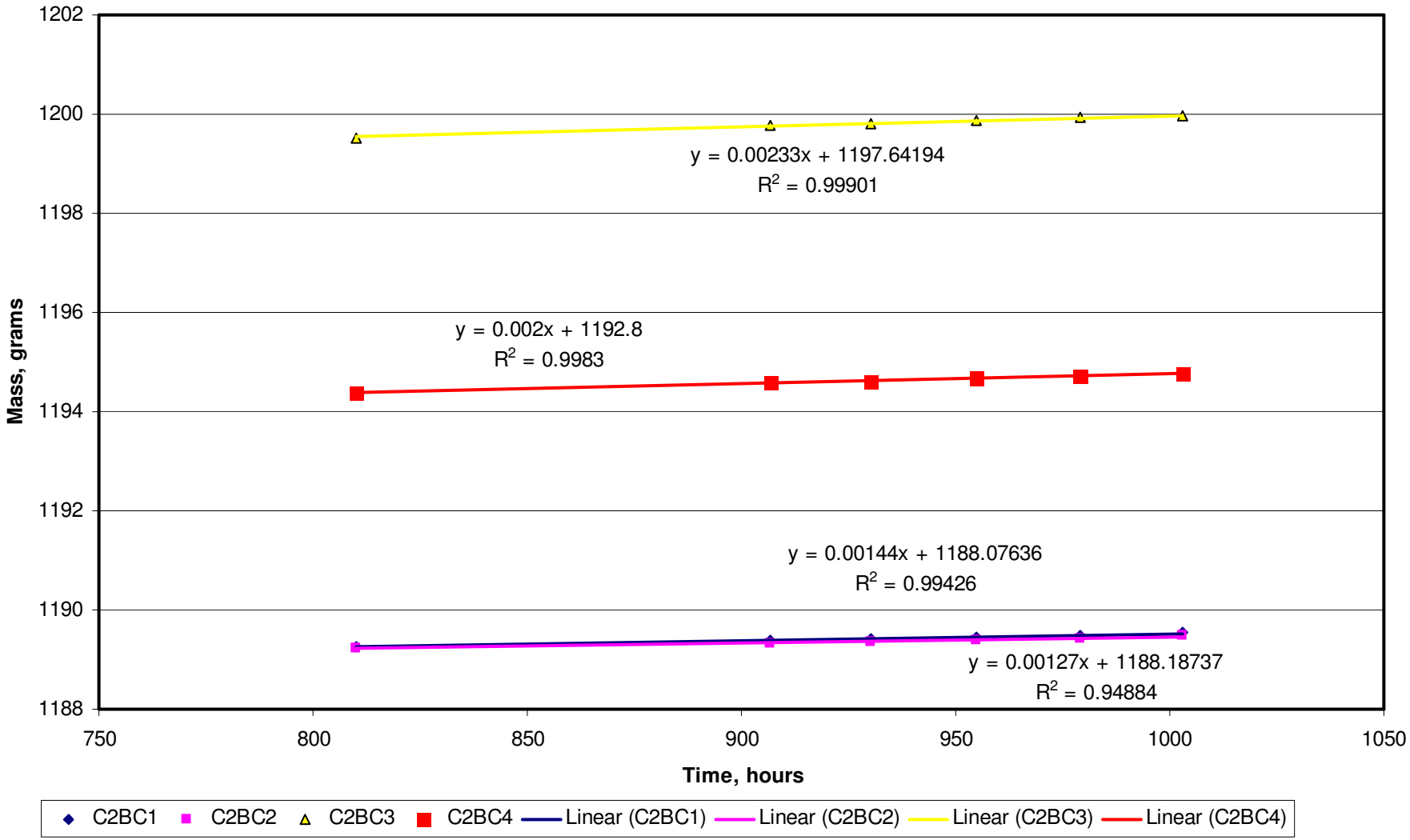

Charleston Phase II WRB Coating on Plywood
RHs: 0% /50%

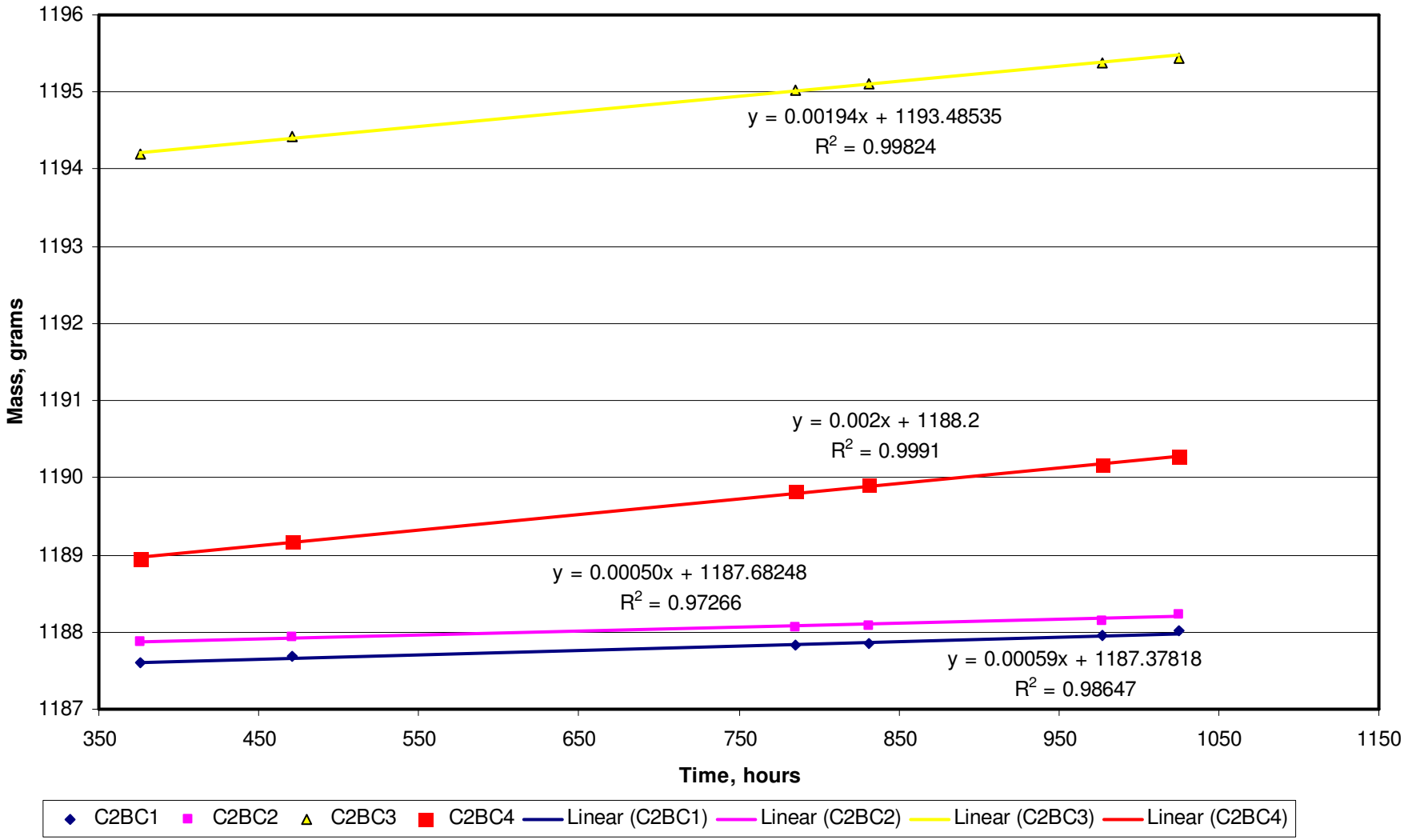

APPENDIX B

Performance Data

Panel 2

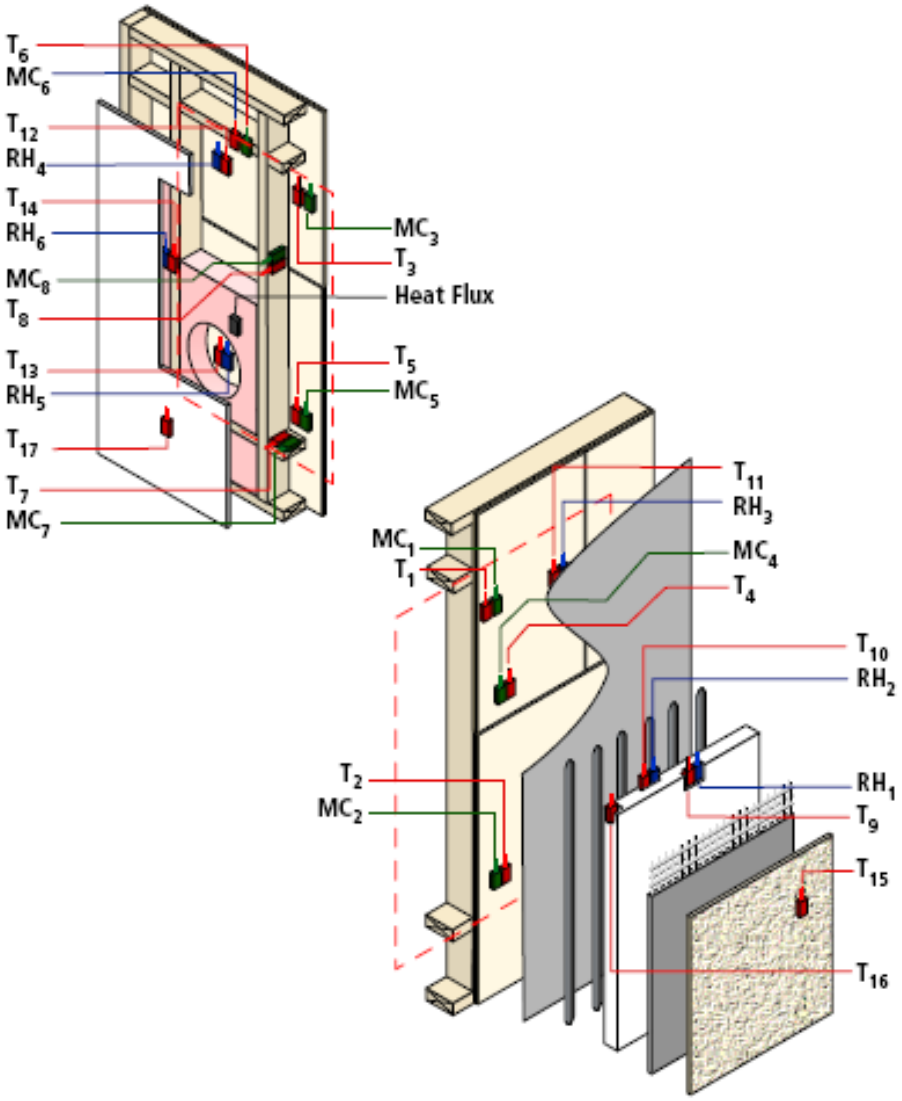
T_6
MC_6
T_{12}
RH_4
T_{14}
RH_6
MC_8
T_8
T_{13}
RH_5
T_{17}
T_7
MC_7
MC_3
T_3
Heat Flux
T_5
MC_5
T_{11}
RH_3
MC_1
T_1
MC_4
T_4
T_{10}
RH_2
T_2
MC_2
RH_1
T_9
T_{15}
T_{16}

Panel 3

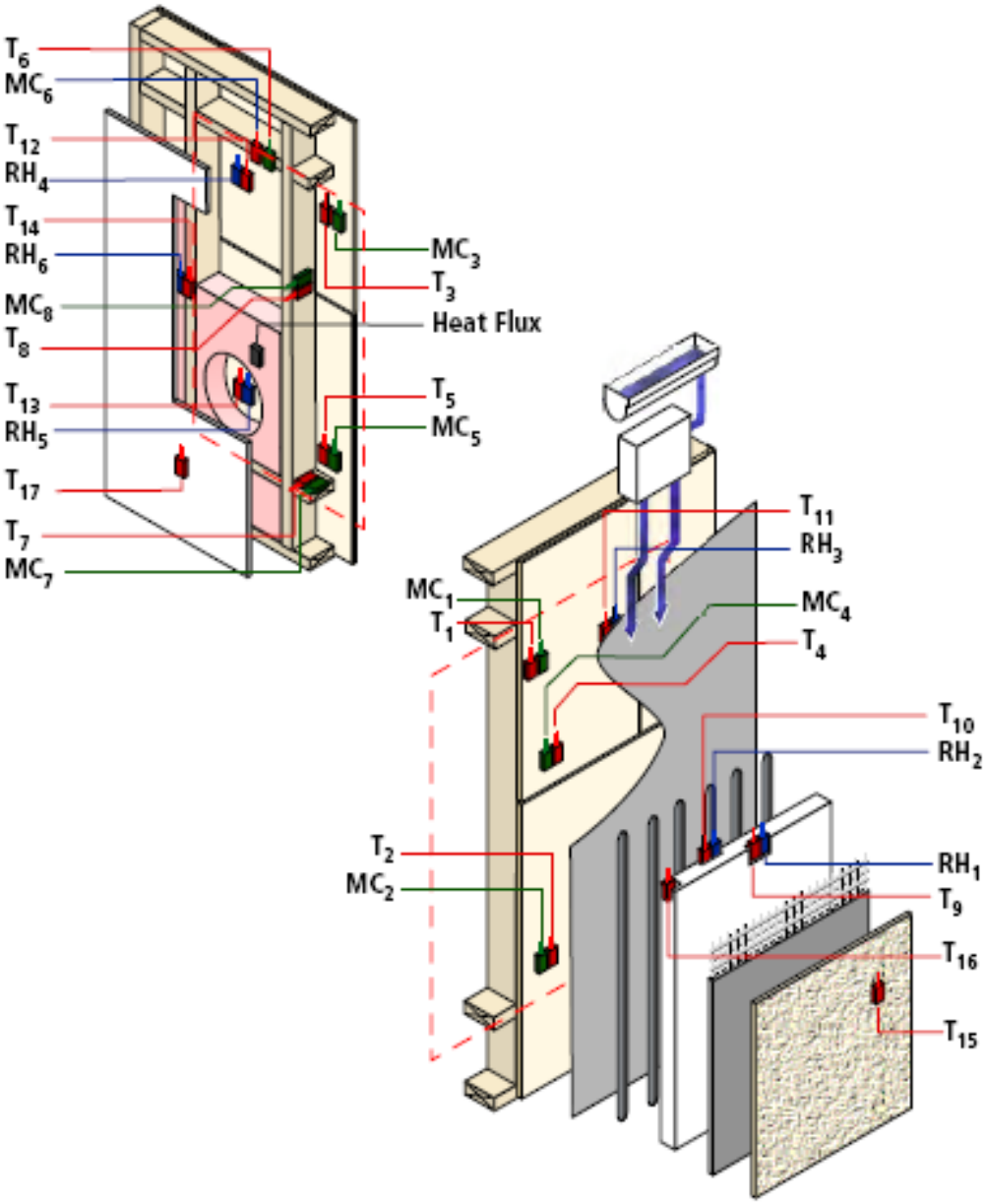
T_6
MC_6
T_{12}
RH_4
T_{14}
RH_6
MC_8
T_8
T_{13}
RH_5
T_{17}
T_7
MC_7
MC_3
T_3
Heat Flux
T_5
MC_5
T_{11}
RH_3
MC_1
T_1
MC_4
T_4
T_{10}
RH_2
T_2
MC_2
RH_1
T_9
T_{16}
T_{15}

Panel 4

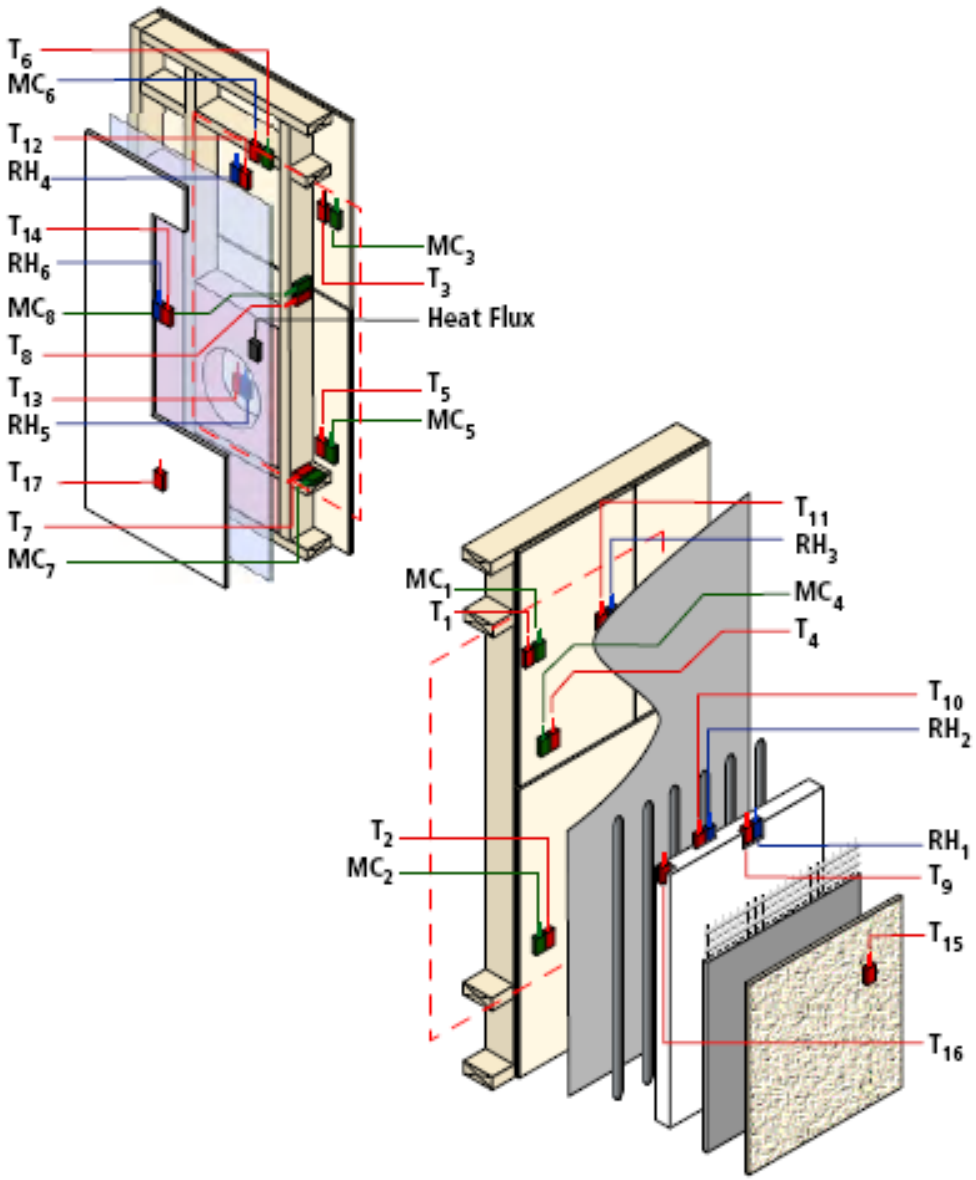
T_6
MC_6
T_{12}
RH_4
T_{14}
RH_6
MC_8
T_8
T_{13}
RH_5
T_{17}
T_7
MC_7
MC_3
T_3
Heat Flux
T_5
MC_5
T_{11}
RH_3
MC_1
T_1
MC_4
T_4
T_{10}
RH_2
T_2
MC_2
RH_1
T_9
T_{15}
T_{16}

Panel 5

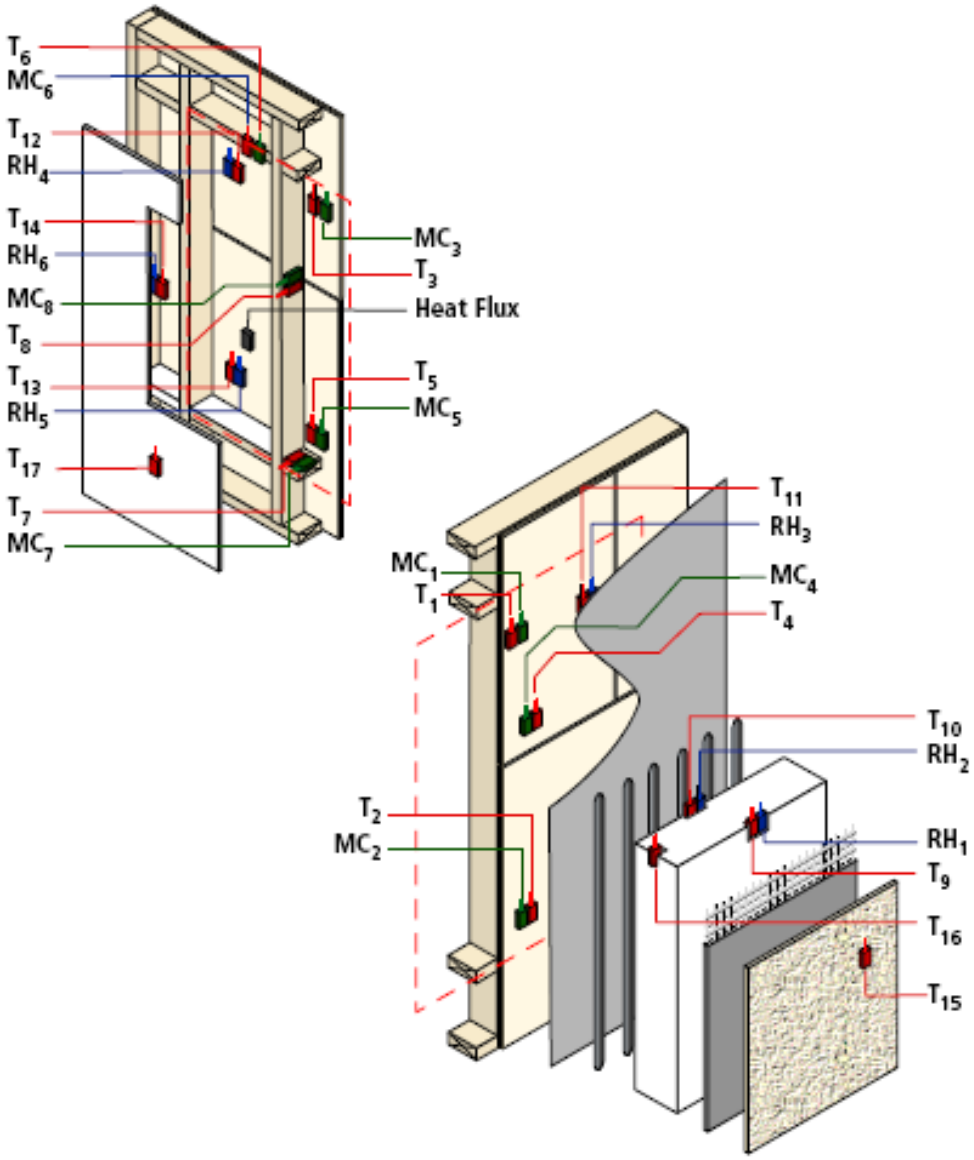
T_6
MC_6
T_{12}
RH_4
T_{14}
RH_6
MC_8
T_8
T_{13}
RH_5
T_{17}
T_7
MC_7
MC_3
T_3
Heat Flux
T_5
MC_5
T_{11}
RH_3
MC_1
T_1
MC_4
T_4
T_{10}
RH_2
T_2
MC_2
RH_1
T_9
T_{16}
T_{15}

Panel 6

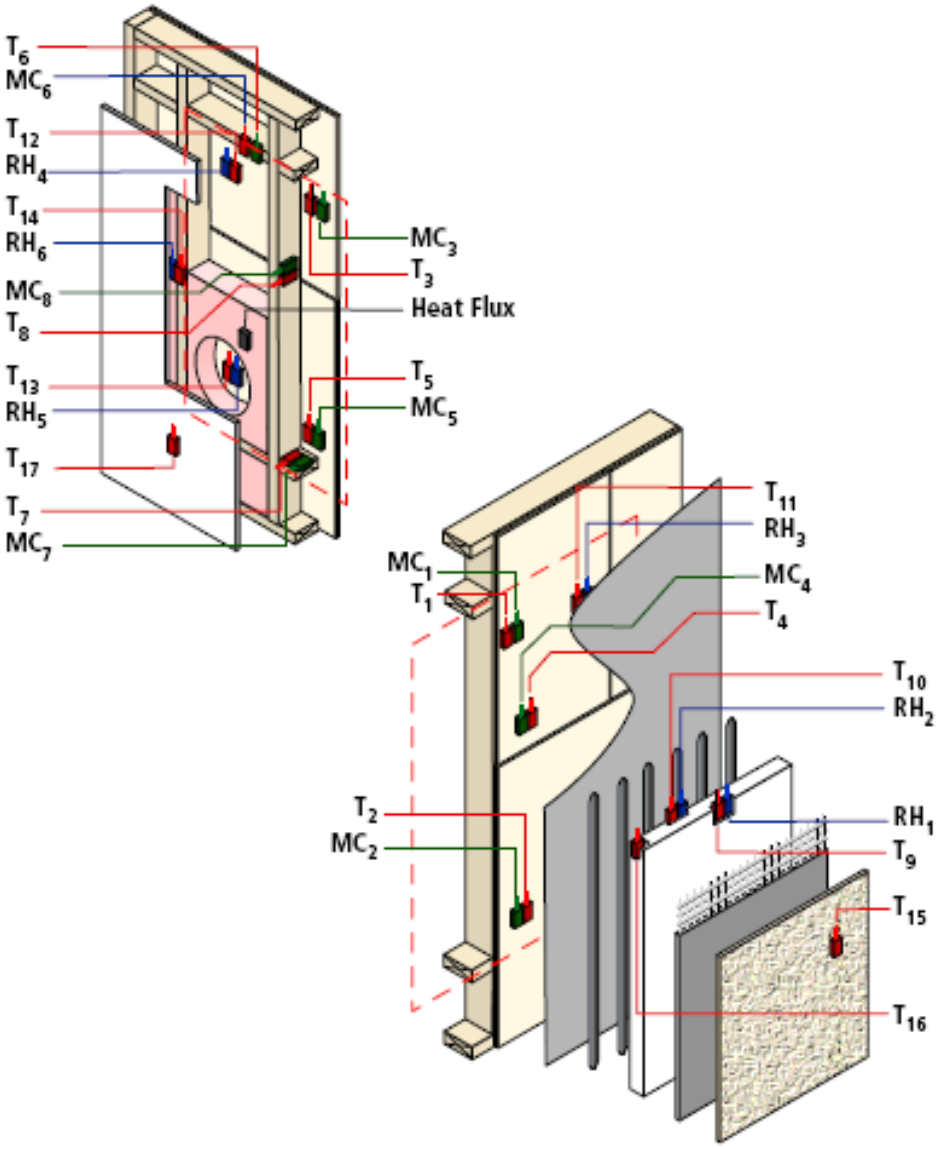
T_6
MC_6
T_{12}
RH_4
T_{14}
RH_6
MC_8
T_8
T_{13}
RH_5
T_{17}
T_7
MC_7
MC_3
T_3
Heat Flux
T_5
MC_5
T_{11}
RH_3
MC_1
T_1
MC_4
T_4
T_{10}
RH_2
T_2
MC_2
RH_1
T_9
T_{15}
T_{16}

Panel 7

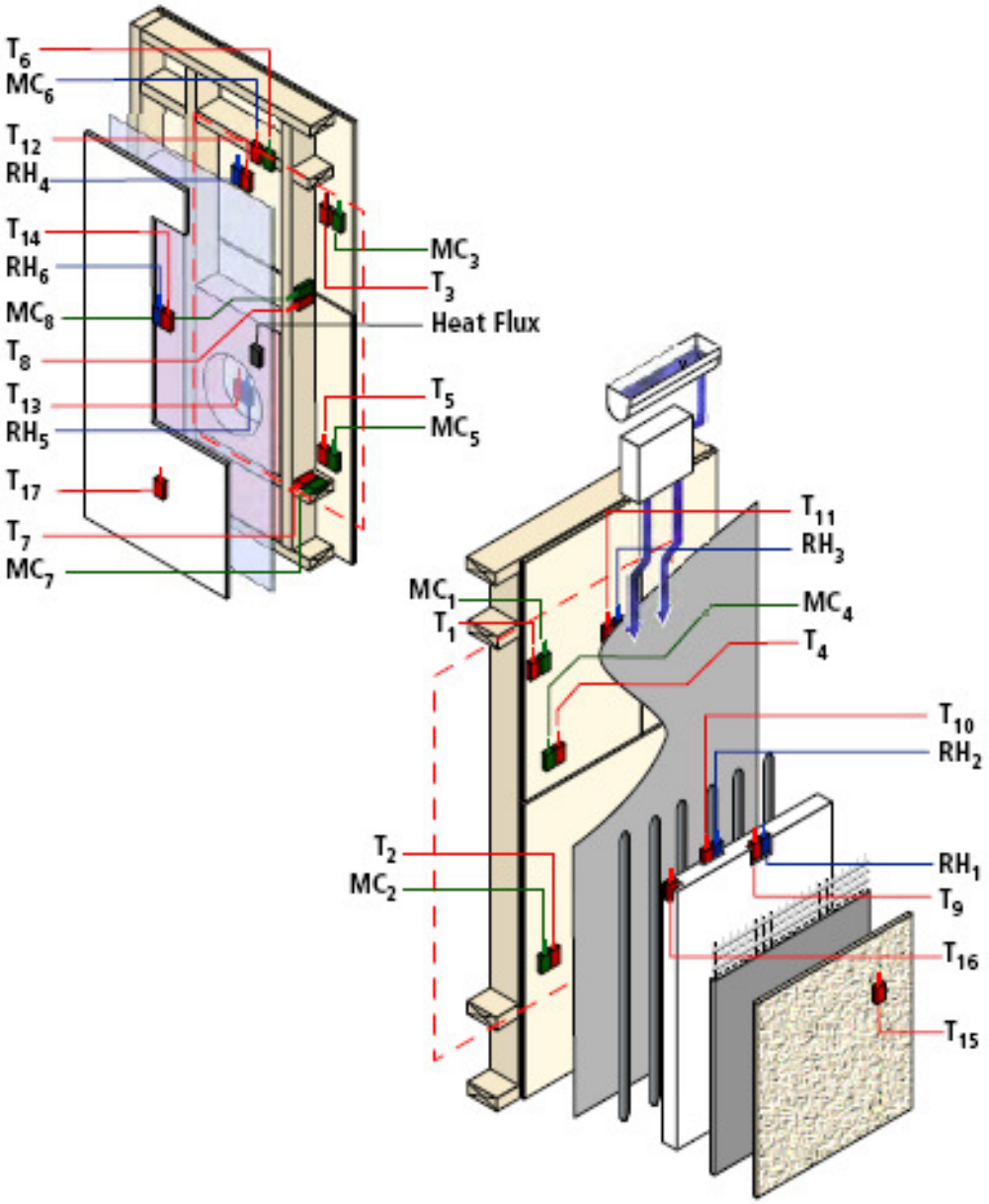
T_6
MC_6
T_{12}
RH_4
T_{14}
RH_6
MC_8
T_8
T_{13}
RH_5
T_{17}
T_7
MC_7
MC_3
T_3
Heat Flux
T_5
MC_5
T_{11}
RH_3
MC_1
T_1
MC_4
T_4
T_{10}
RH_2
T_2
MC_2
RH_1
T_9
T_{16}
T_{15}

Panel 9

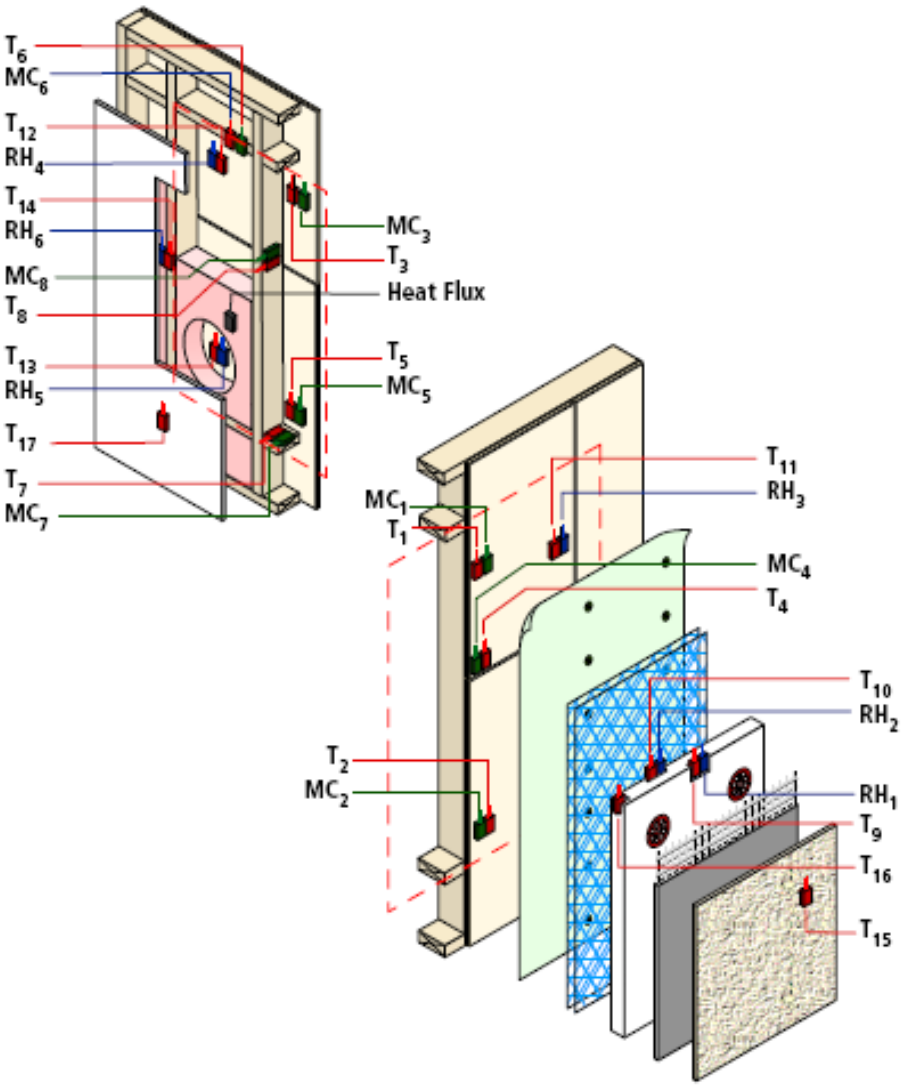
T_6
MC_6
T_{12}
RH_4
T_{14}
RH_6
MC_8
T_8
T_{13}
RH_5
T_{17}
T_7
MC_7
MC_3
T_3
Heat Flux
T_5
MC_5
T_{11}
RH_3
MC_1
T_1
MC_4
T_4
T_{10}
RH_2
T_2
MC_2
RH_1
T_9
T_{16}
T_{15}

Panel 10

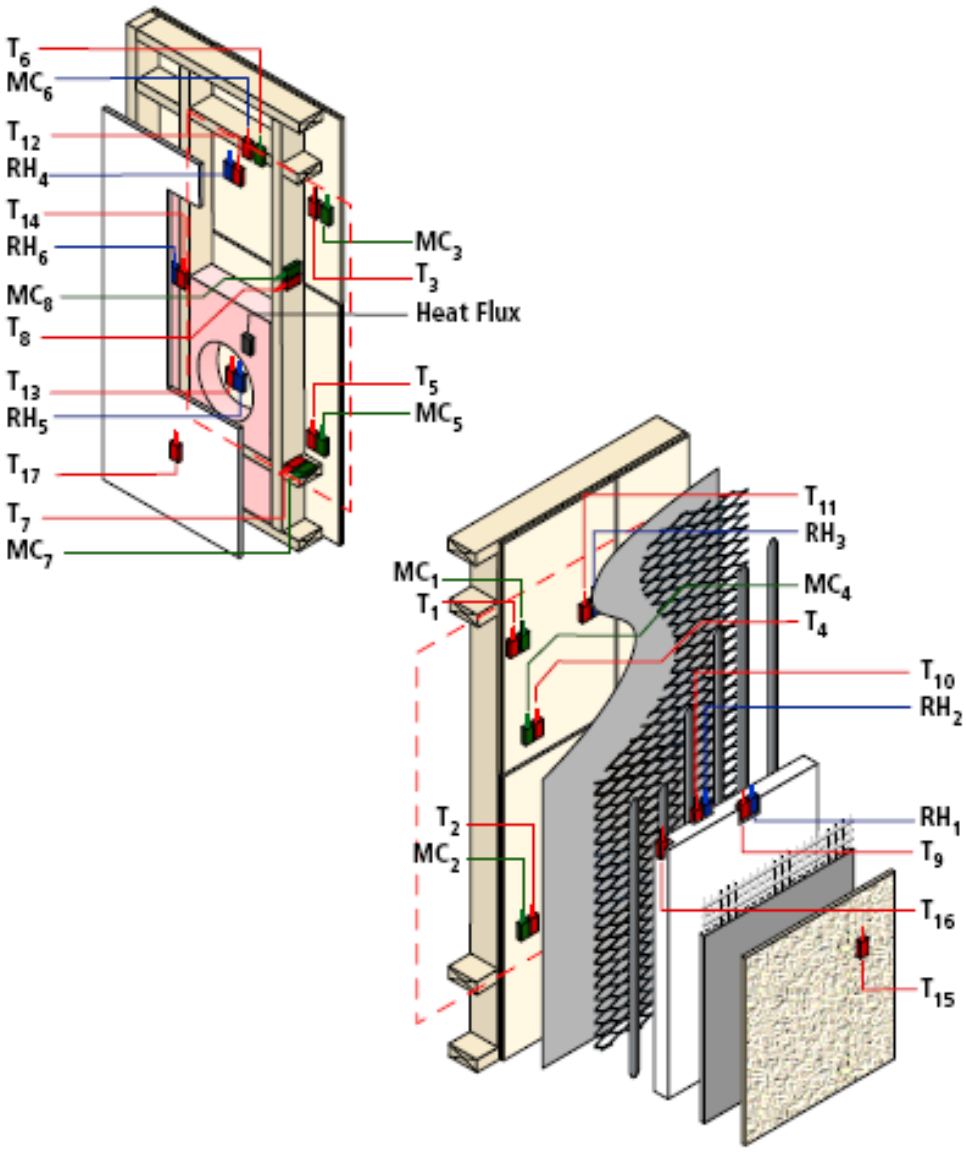
T_6
MC_6
T_{12}
RH_4
T_{14}
RH_6
MC_8
T_8
T_{13}
RH_5
T_{17}
T_7
MC_7
MC_3
T_3
Heat Flux
T_5
MC_5
T_{11}
RH_3
MC_1
T_1
MC_4
T_4
T_{10}
RH_2
T_2
MC_2
RH_1
T_9
T_{16}
T_{15}

Panel 12

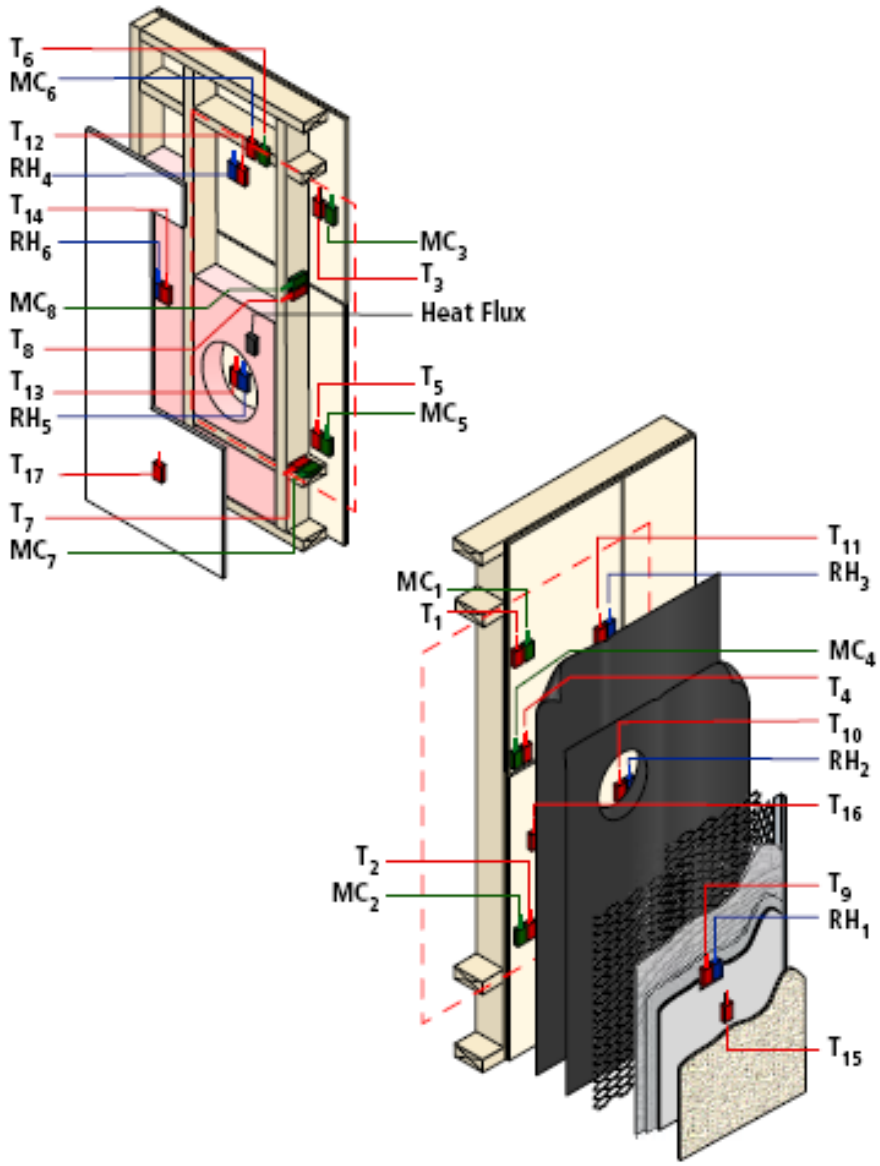
T_6
MC_6
T_{12}
RH_4
T_{14}
RH_6
MC_8
T_8
T_{13}
RH_5
T_{17}
T_7
MC_7
MC_3
T_3
Heat Flux
T_5
MC_5
T_{11}
RH_3
MC_1
T_1
MC_4
T_4
T_{10}
RH_2
T_{16}
T_2
MC_2
T_9
RH_1
T_{15}

Panel 14

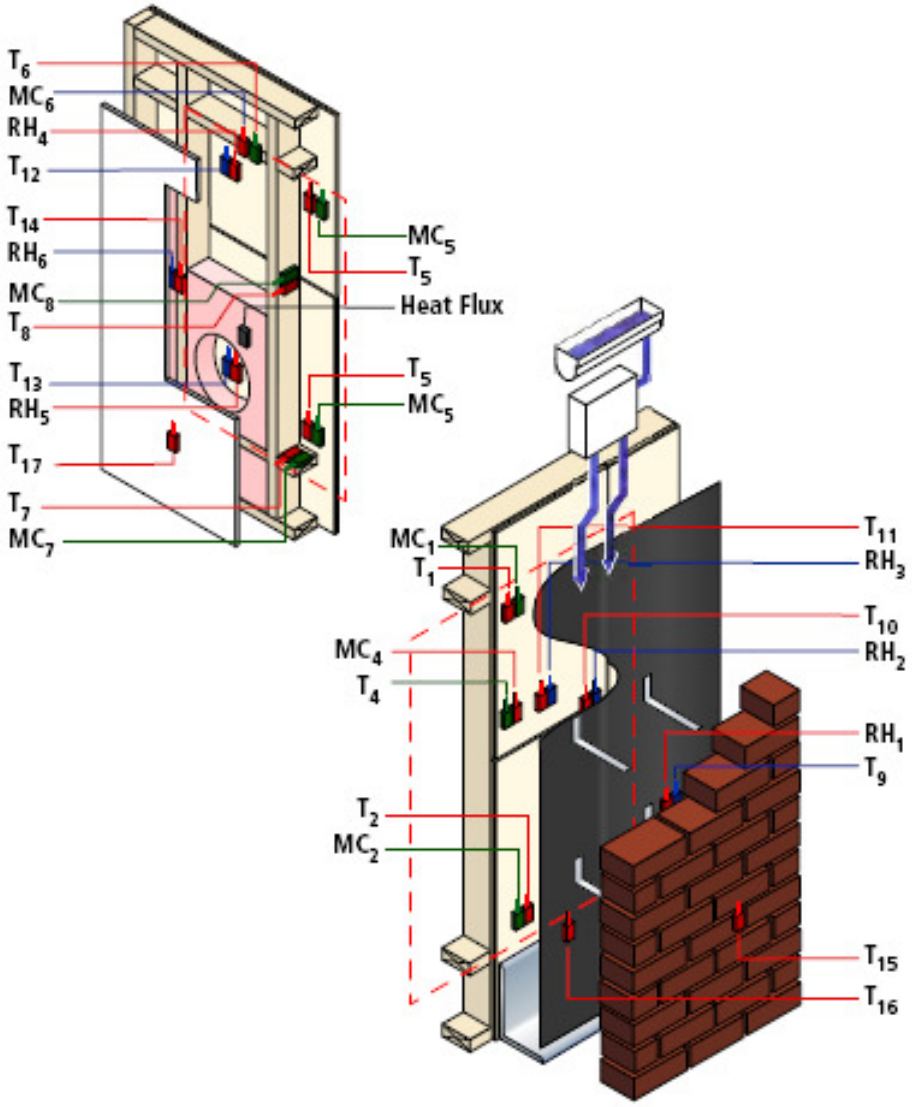
T_6
MC_6
RH_4
T_{12}
T_{14}
RH_6
MC_8
T_8
T_{13}
RH_5
T_{17}
T_7
MC_7
MC_5
T_5
Heat Flux
T_5
MC_5
MC_1
T_1
MC_4
T_4
T_2
MC_2
T_{11}
RH_3
T_{10}
RH_2
RH_1
T_9
T_{15}
T_{16}

Panel 15

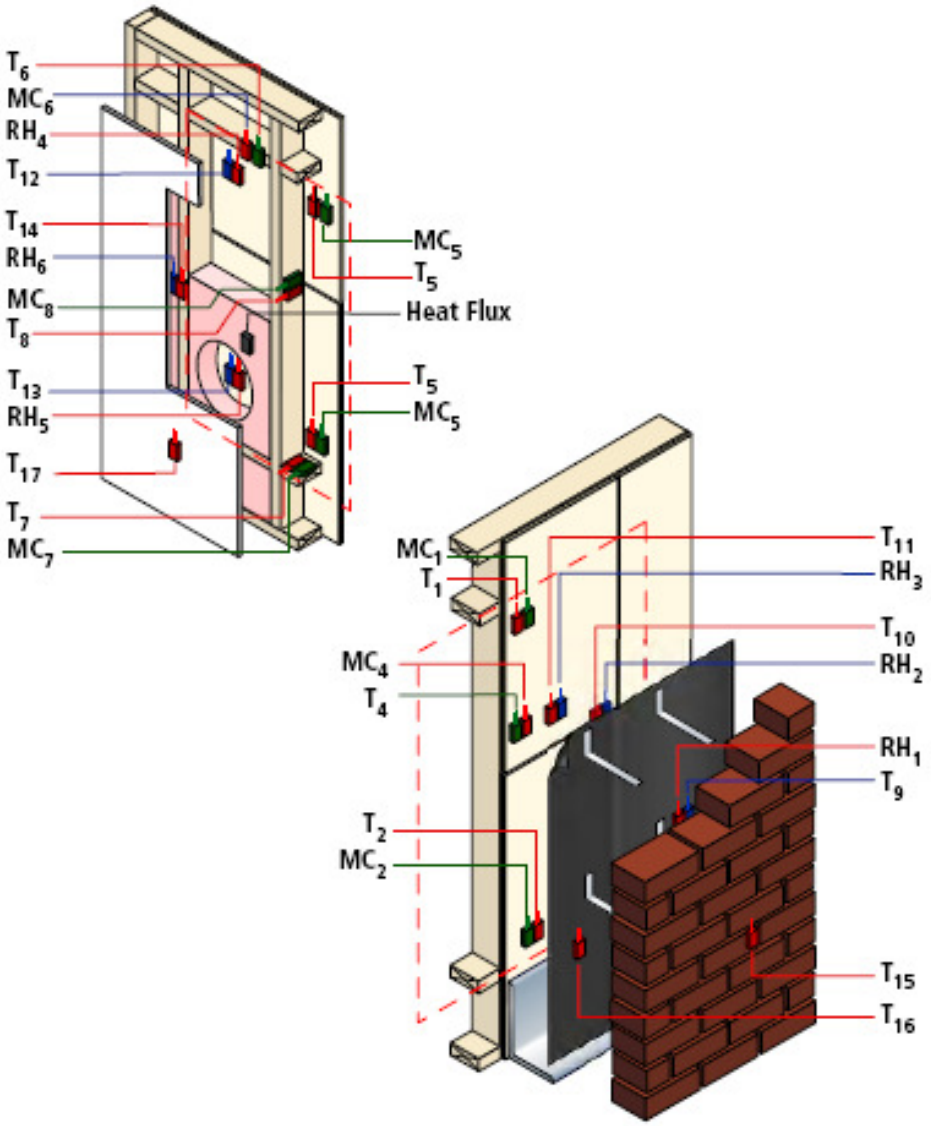
T_6
MC_6
RH_4
T_{12}
T_{14}
RH_6
MC_8
T_8
T_{13}
RH_5
T_{17}
T_7
MC_7
MC_5
T_5
Heat Flux
T_5
MC_5
MC_1
T_1
MC_4
T_4
T_2
MC_2
T_{11}
RH_3
T_{10}
RH_2
RH_1
T_9
T_{15}
T_{16}

Panel 16

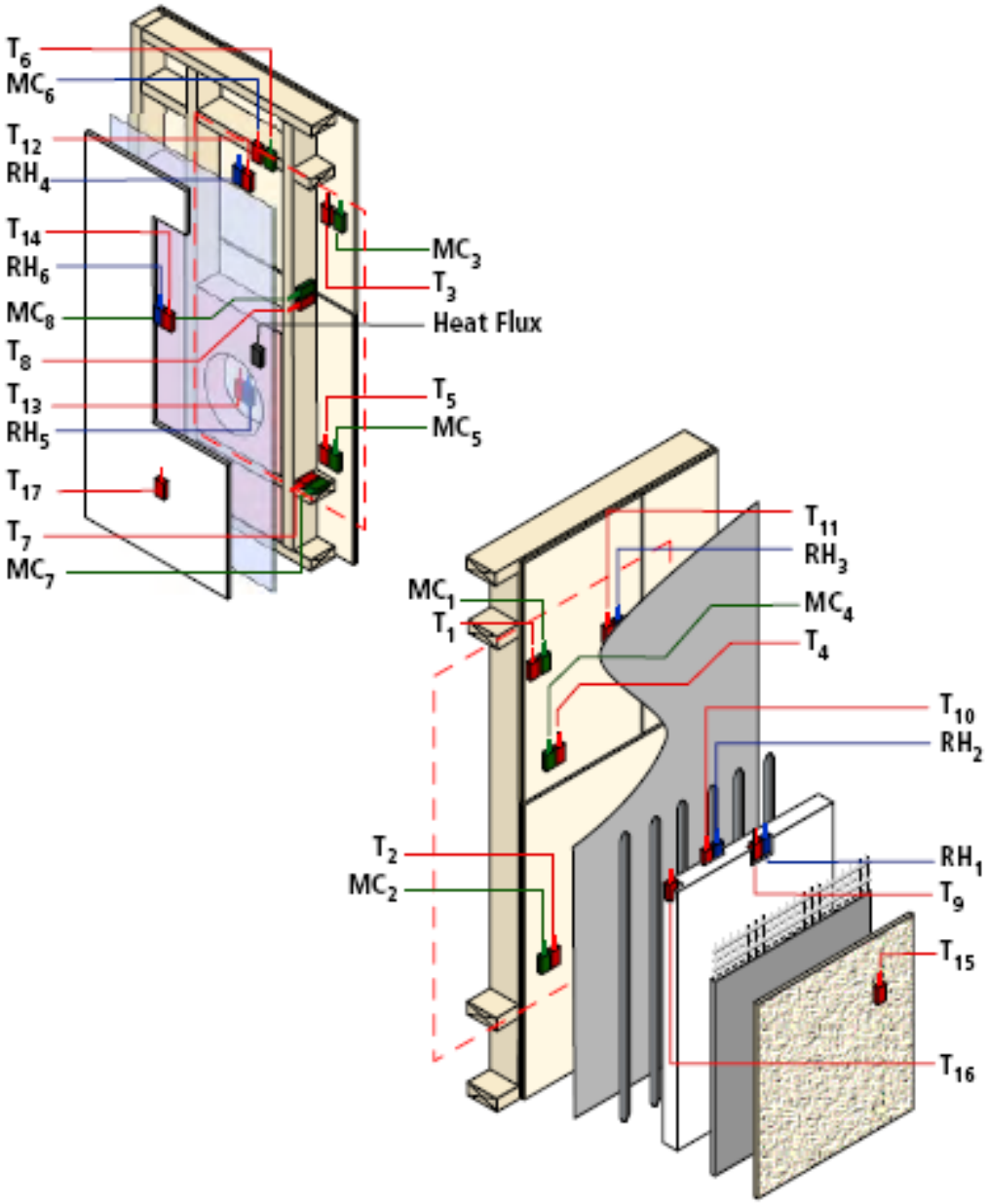
T_6
MC_6
T_{12}
RH_4
T_{14}
RH_6
MC_8
T_8
T_{13}
RH_5
T_{17}
T_7
MC_7
MC_3
T_3
Heat Flux
T_5
MC_5
T_{11}
RH_3
MC_1
T_1
MC_4
T_4
T_{10}
RH_2
T_2
MC_2
RH_1
T_9
T_{15}
T_{16}

Panel 17

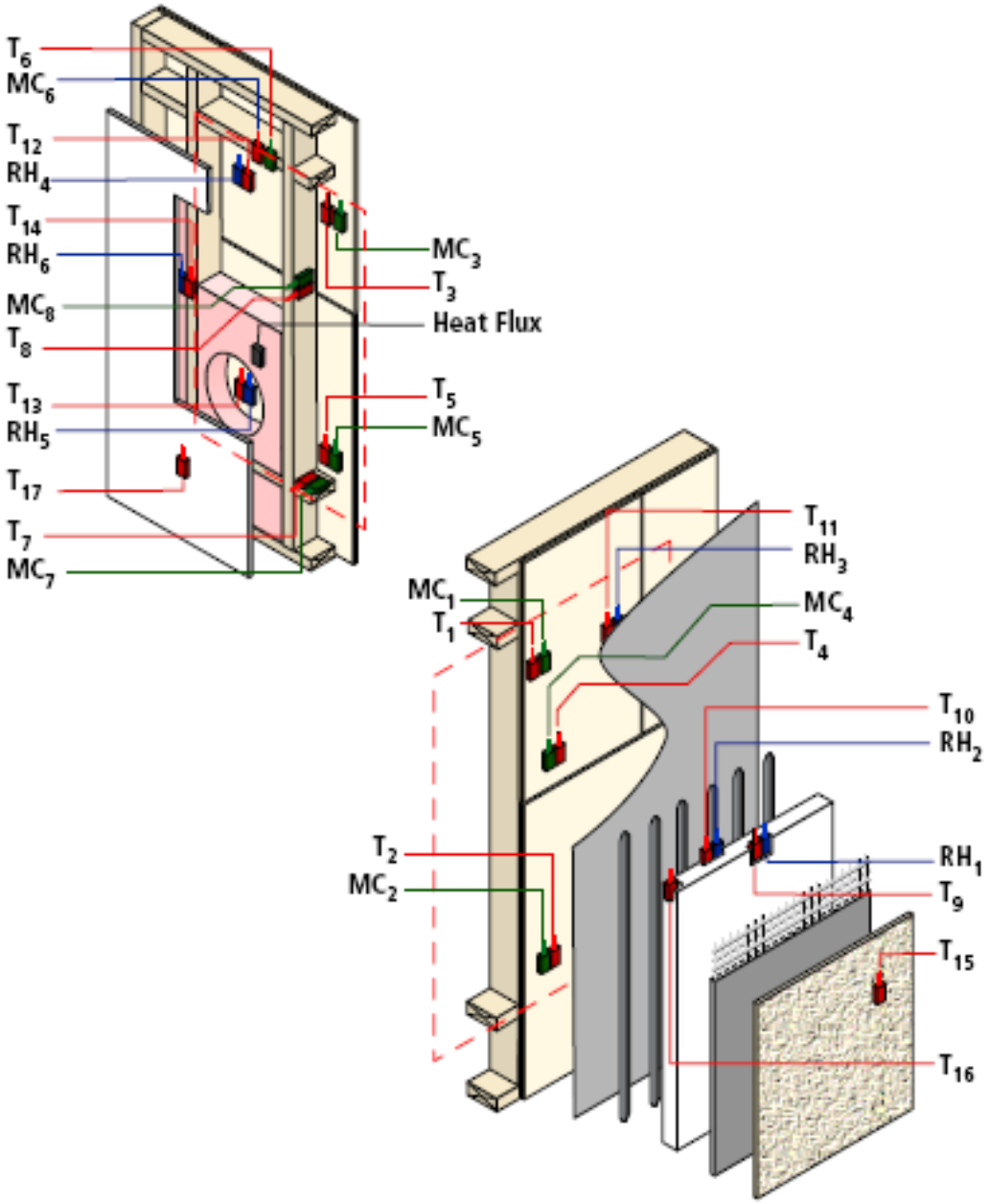
T_6
MC_6
T_{12}
RH_4
T_{14}
RH_6
MC_8
T_8
T_{13}
RH_5
T_{17}
T_7
MC_7
MC_3
T_3
Heat Flux
T_5
MC_5
T_{11}
RH_3
MC_1
T_1
MC_4
T_4
T_{10}
RH_2
T_2
MC_2
RH_1
T_9
T_{15}
T_{16}

Panel 18

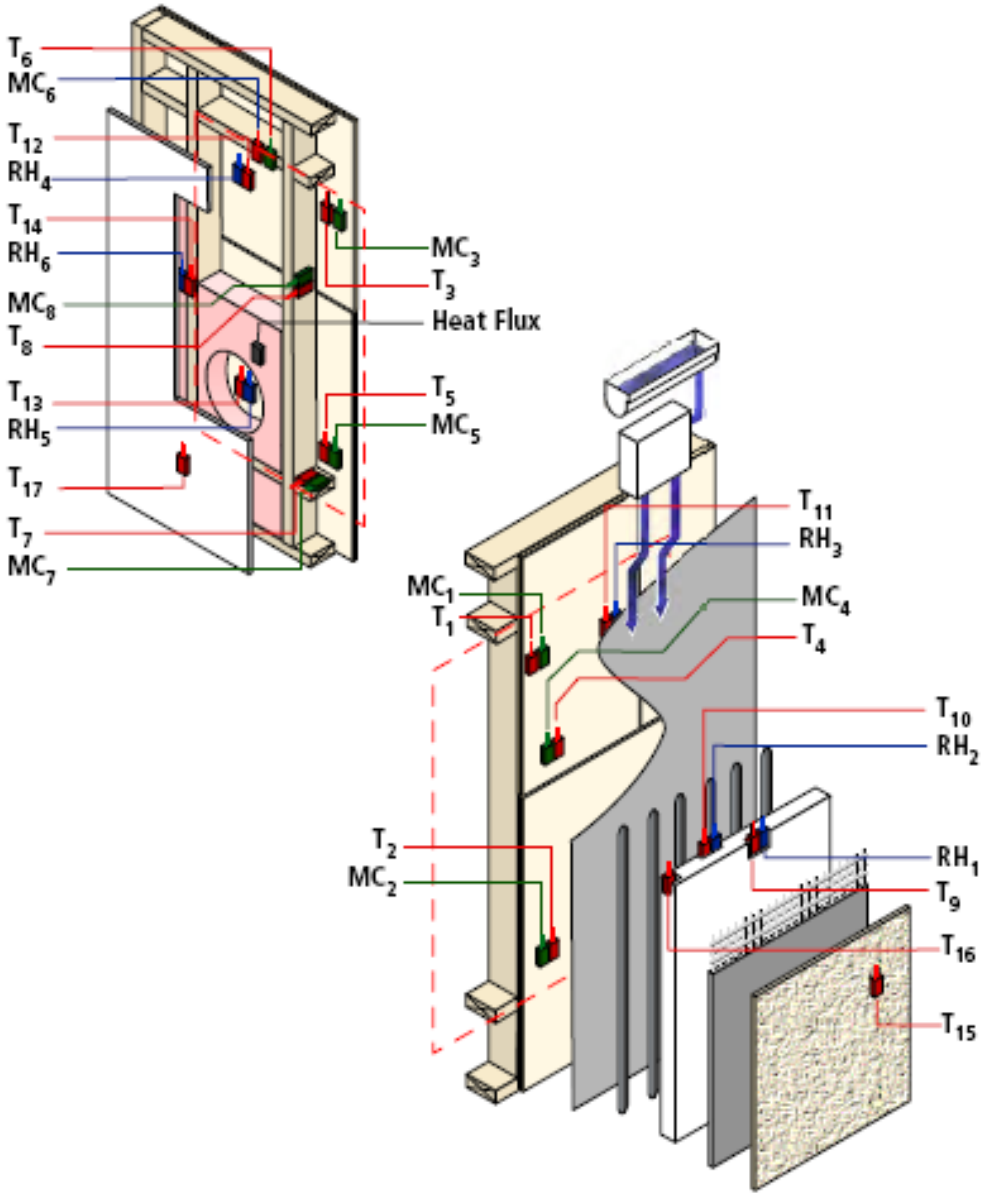
T_6
MC_6
T_{12}
RH_4
T_{14}
RH_6
MC_8
T_8
T_{13}
RH_5
T_{17}
T_7
MC_7
MC_3
T_3
Heat Flux
T_5
MC_5
T_{11}
RH_3
MC_1
T_1
MC_4
T_4
T_{10}
RH_2
T_2
MC_2
RH_1
T_9
T_{16}
T_{15}

Panel 26

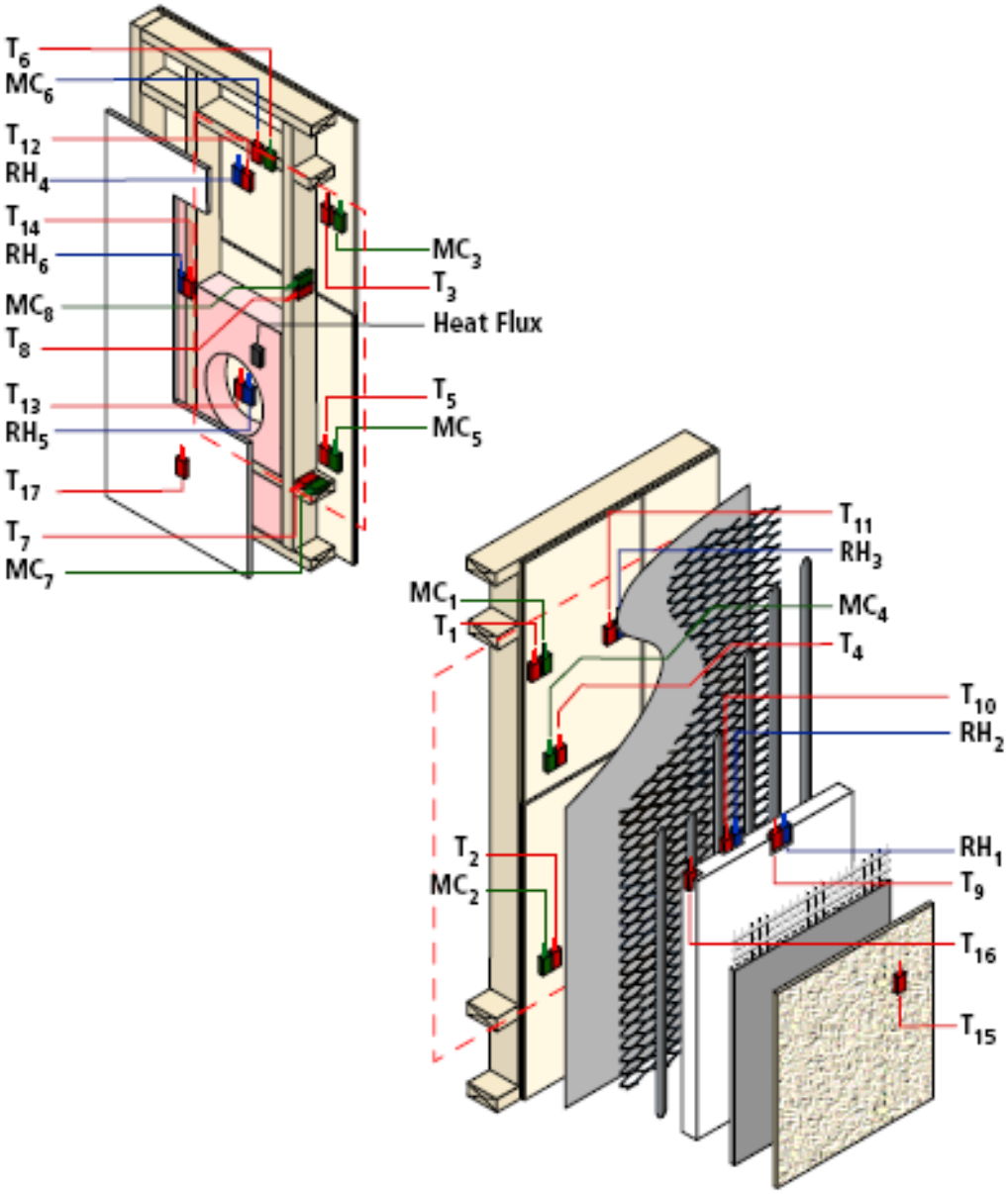
T_6
MC_6
T_{12}
RH_4
T_{14}
RH_6
MC_8
T_8
T_{13}
RH_5
T_{17}
T_7
MC_7
MC_3
T_3
Heat Flux
T_5
MC_5
T_{11}
RH_3
MC_1
T_1
MC_4
T_4
T_{10}
RH_2
T_2
MC_2
RH_1
T_9
T_{16}
T_{15}

APPENDIX B

Performance Data

Panel 2

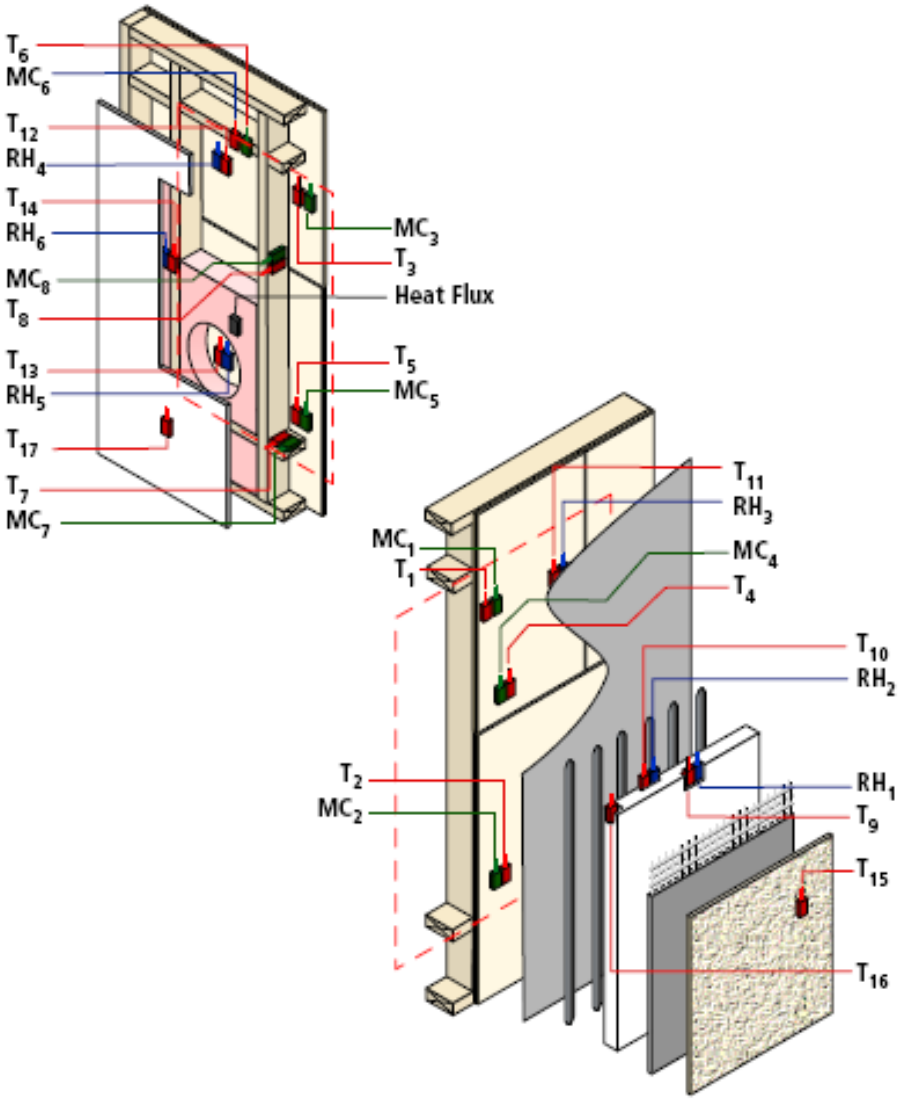
T_6
MC_6
T_{12}
RH_4
T_{14}
RH_6
MC_8
T_8
T_{13}
RH_5
T_{17}
T_7
MC_7
MC_3
T_3
Heat Flux
T_5
MC_5
T_{11}
RH_3
MC_1
T_1
MC_4
T_4
T_{10}
RH_2
T_2
MC_2
RH_1
T_9
T_{15}
T_{16}

Panel 2

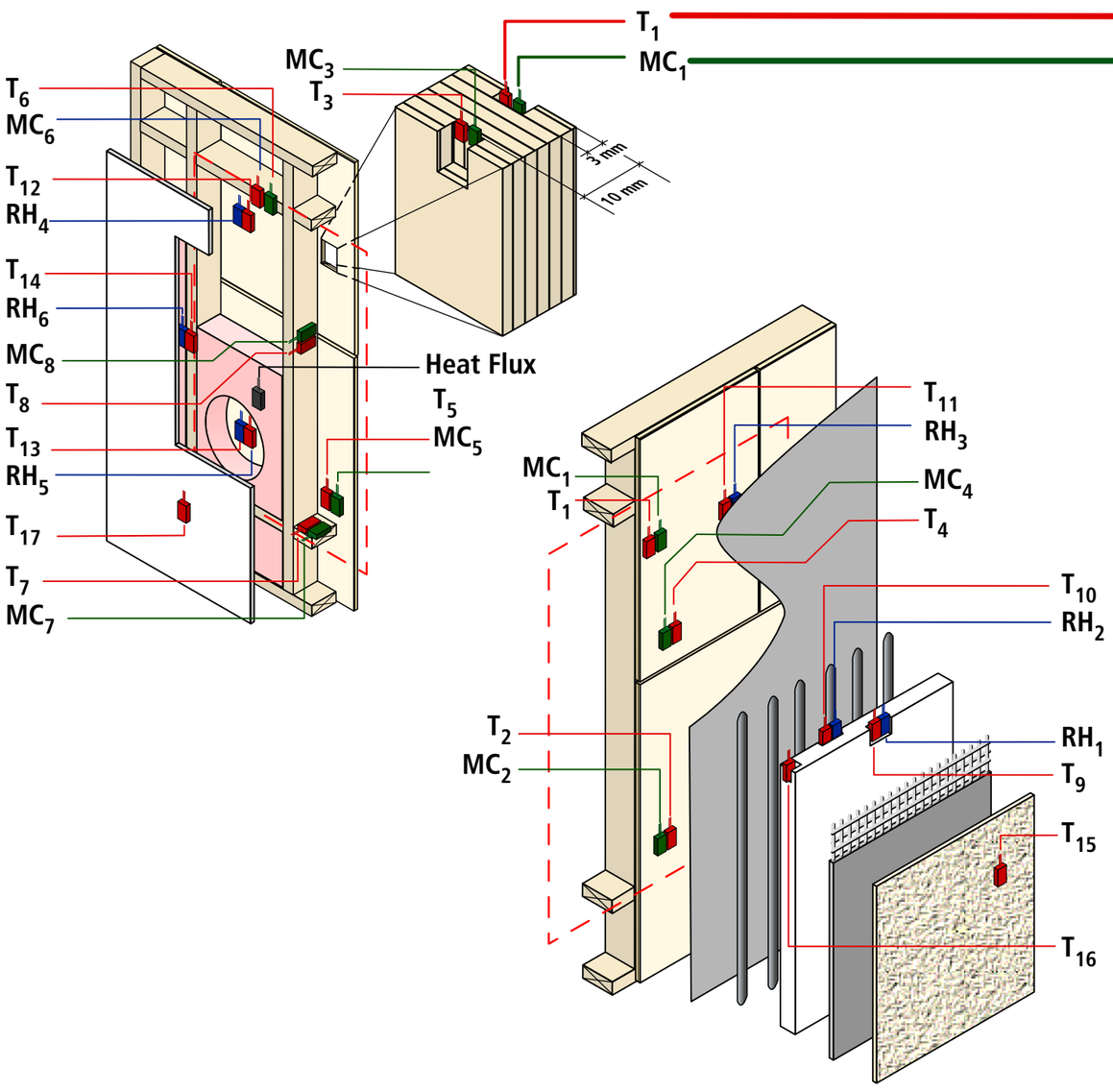
T1
MC1
MC3
T3
T6
MC6
T12
RH4
T14
RH6
MC8
T8
T13
RH5
T17
T7
MC7
3 mm
10 mm
Heat Flux
T5
MC5
T11
RH3
MC4
T4
T10
RH2
RH1
T9
T15
T16
T2
MC2

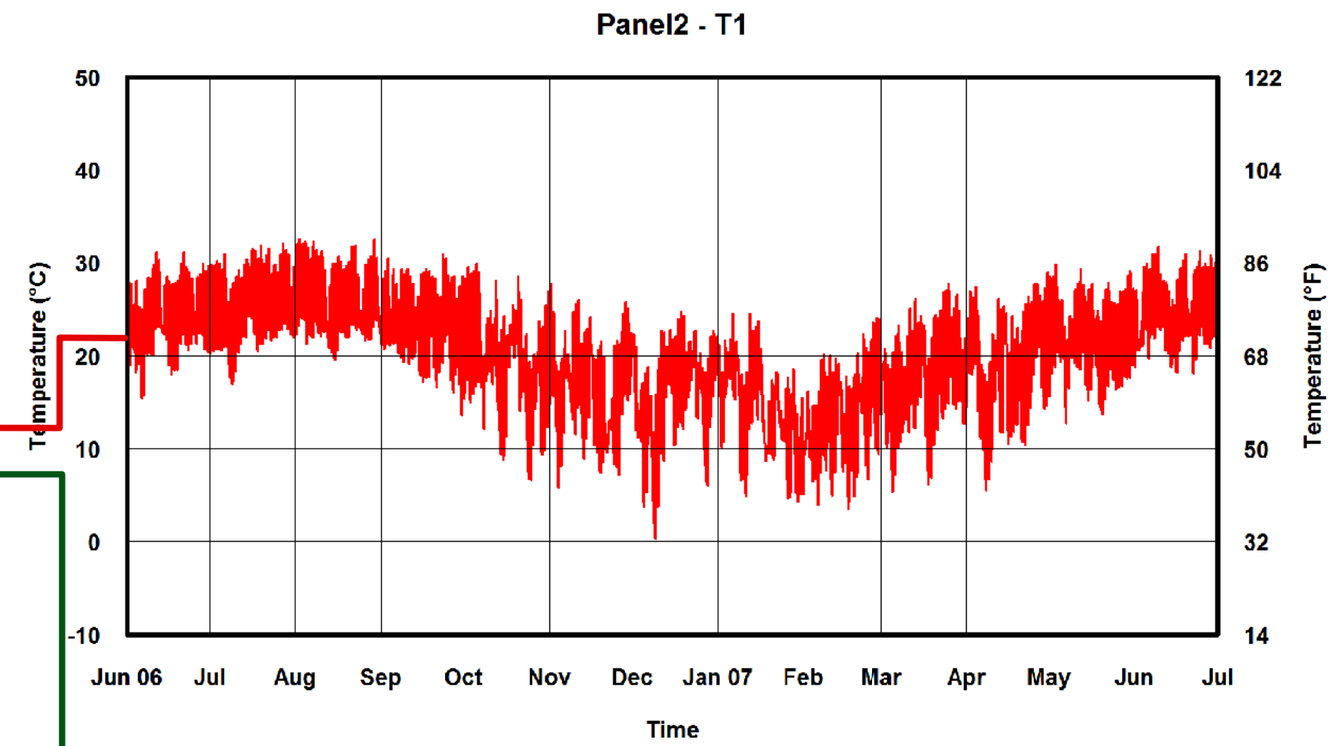
Panel2 - T1
Temperature (°C)
Temperature (°F)
50
40
30
20
10
0
-10
122
104
86
68
50
32
14
Jun 06
Jul
Aug
Sep
Oct
Nov
Dec
Jan 07
Feb
Mar
Apr
May
Jun
Jul
Time

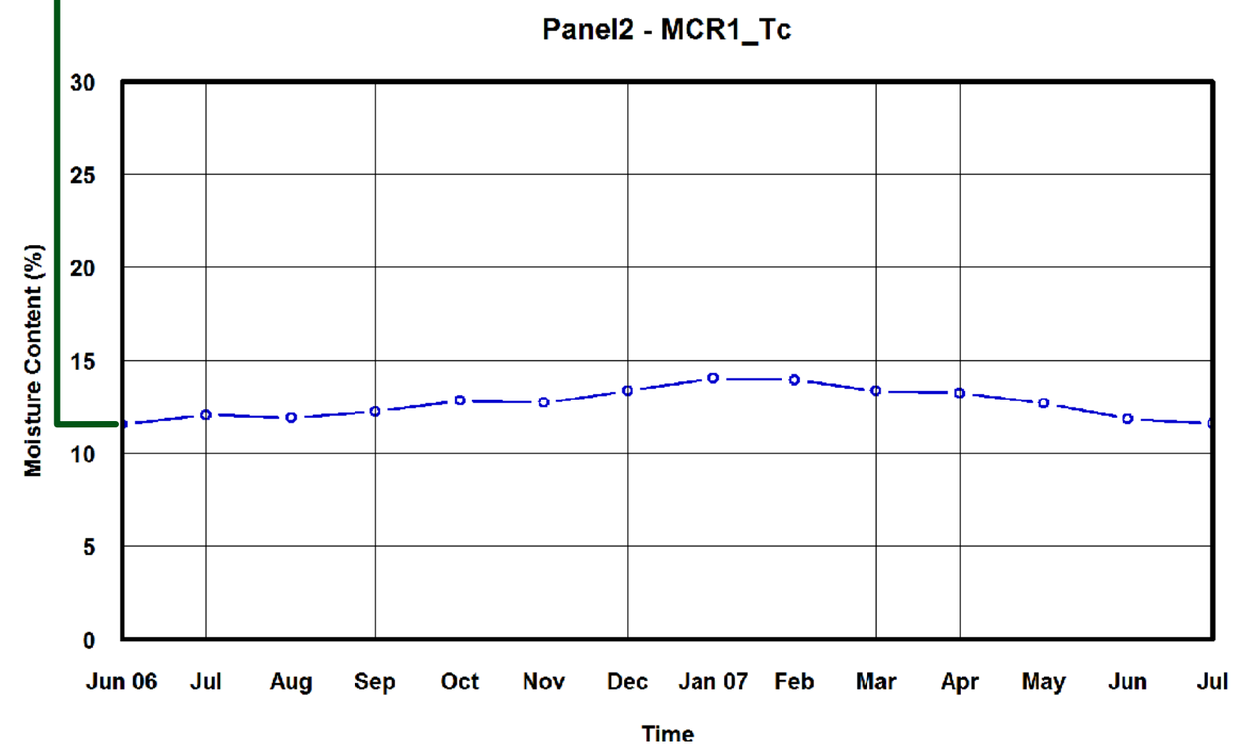
Panel2 - MCR1_Tc
Moisture Content (%)
30
25
20
15
10
5
0
Jun 06
Jul
Aug
Sep
Oct
Nov
Dec
Jan 07
Feb
Mar
Apr
May
Jun
Jul
Time

Panel 2

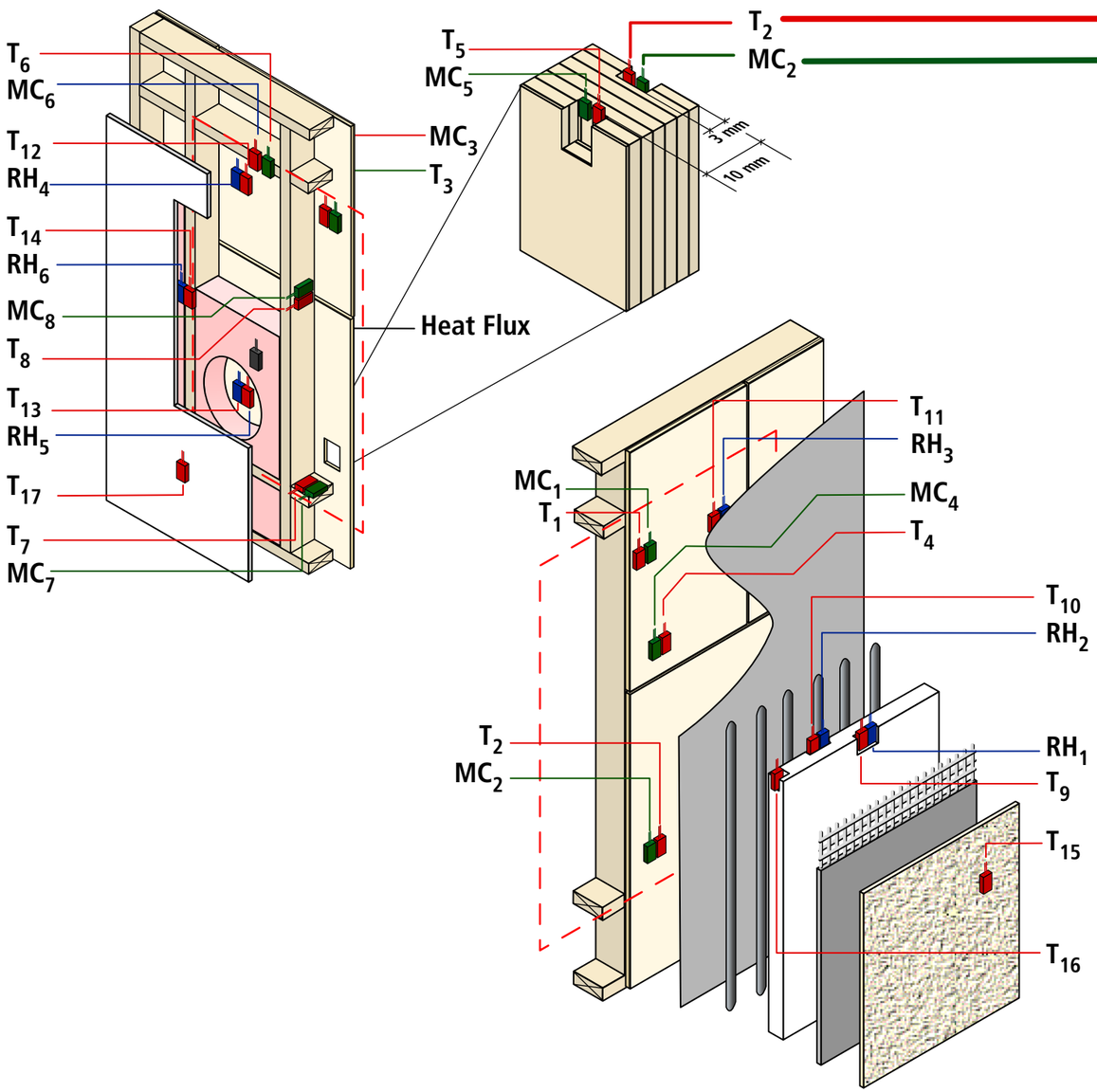
T_6
MC_6
T_{12}
RH_4
T_{14}
RH_6
MC_8
T_8
T_{13}
RH_5
T_{17}
T_7
MC_7
T_5
MC_5
T_2
MC_2
MC_3
T_3
3 mm
10 mm
Heat Flux
T_{11}
RH_3
MC_1
T_1
MC_4
T_4
T_{10}
RH_2
T_2
MC_2
RH_1
T_9
T_{15}
T_{16}

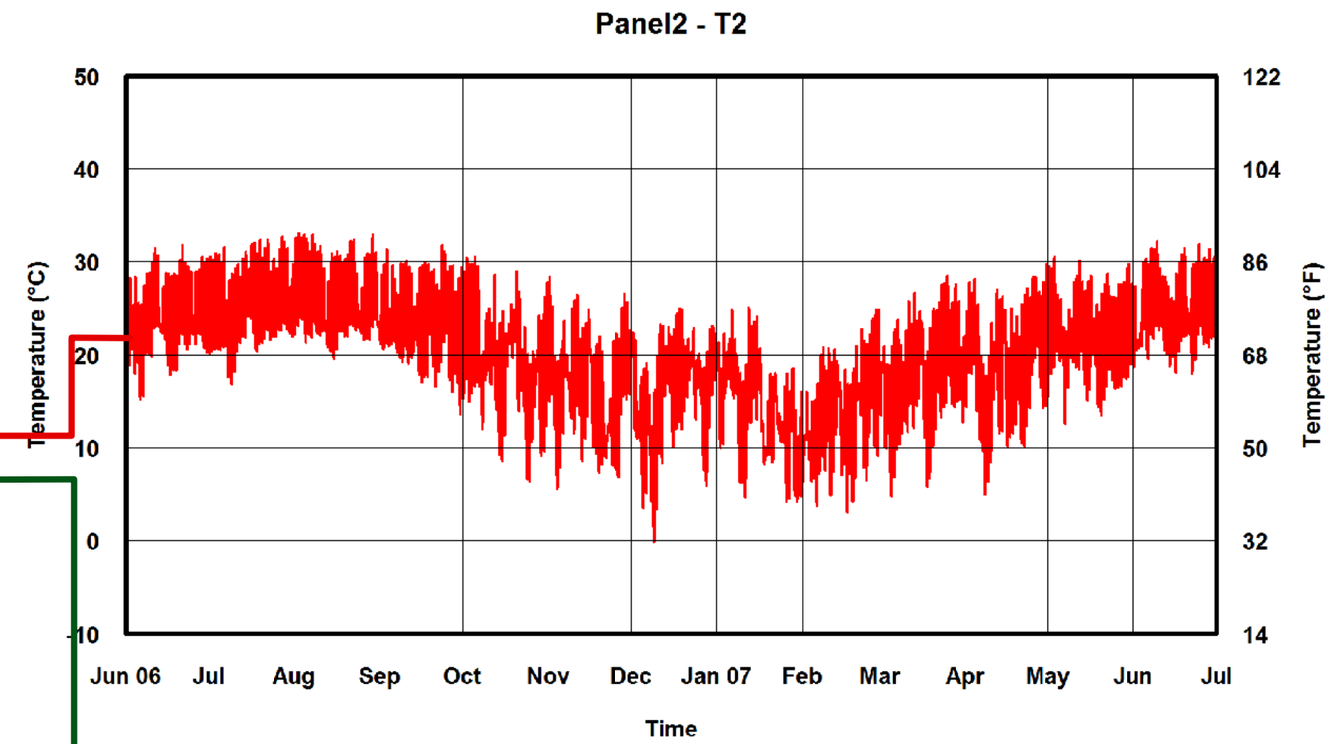
Panel2 - T2
Temperature (°C)
Temperature (°F)
50
40
30
20
10
0
-10
122
104
86
68
50
32
14
Jun 06
Jul
Aug
Sep
Oct
Nov
Dec
Jan 07
Feb
Mar
Apr
May
Jun
Jul
Time

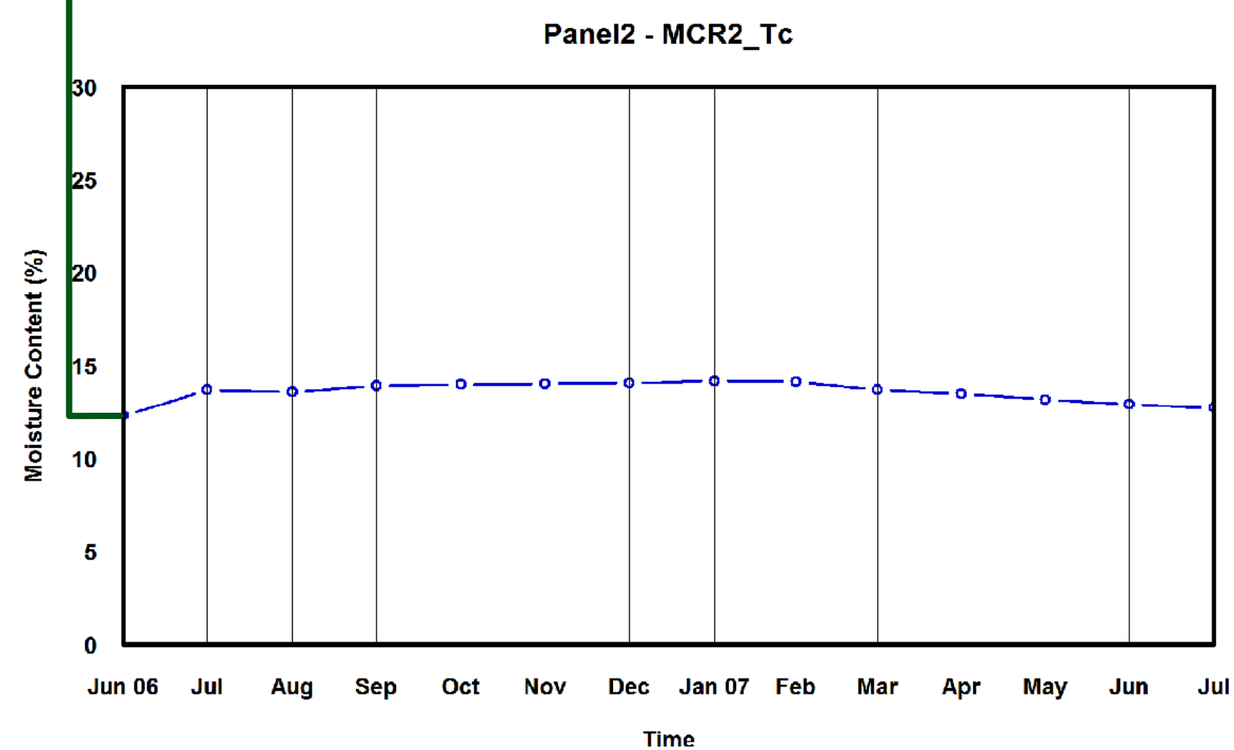
Panel2 - MCR2_Tc
Moisture Content (%)
30
25
20
15
10
5
0
Jun 06
Jul
Aug
Sep
Oct
Nov
Dec
Jan 07
Feb
Mar
Apr
May
Jun
Jul
Time

Panel 2

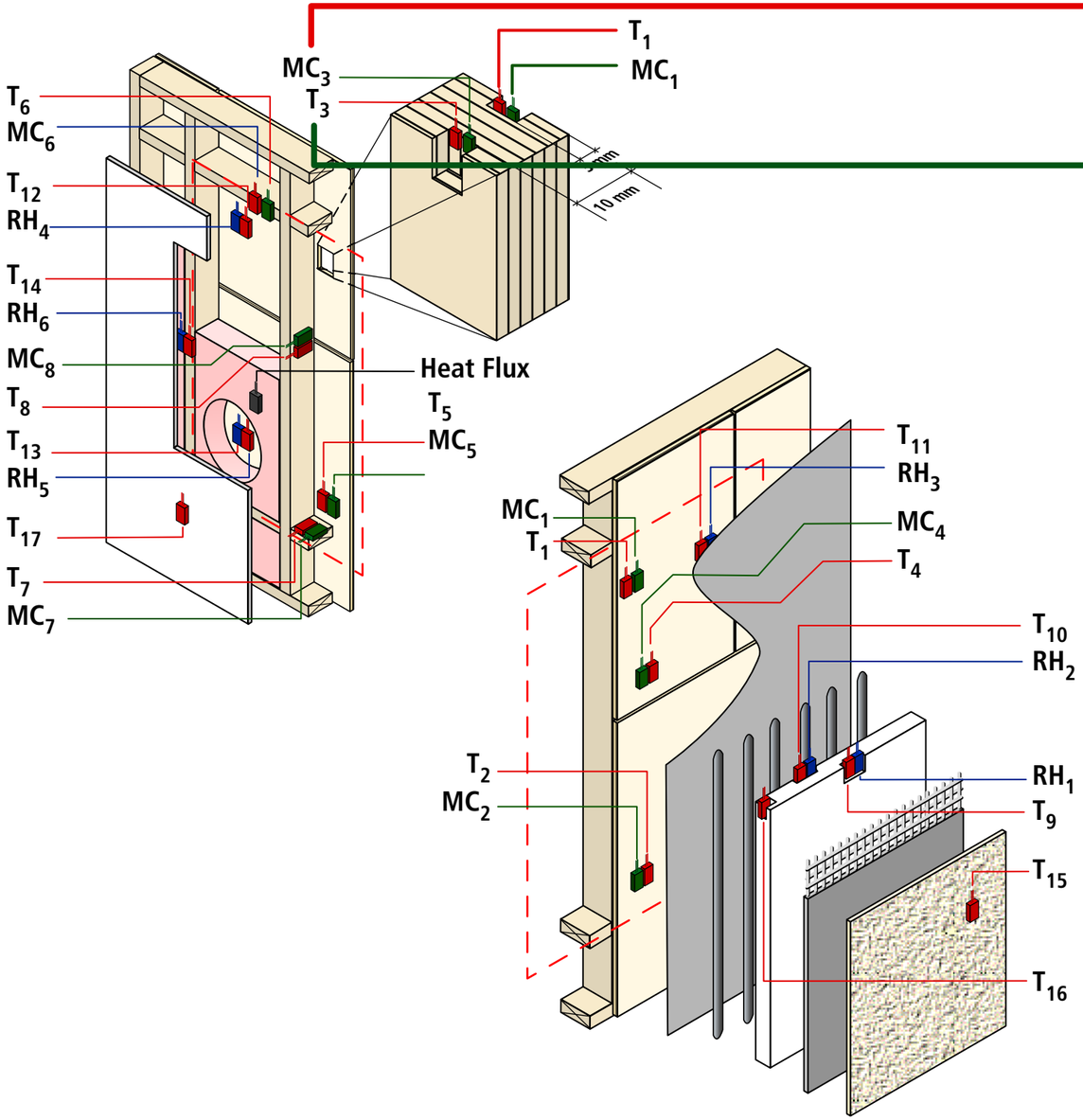
T_1
MC_1
MC_3
T_3
T_6
MC_6
T_{12}
RH_4
T_{14}
RH_6
MC_8
T_8
T_{13}
RH_5
T_{17}
T_7
MC_7
10 mm
Heat Flux
T_5
MC_5
T_{11}
RH_3
MC_1
T_1
MC_4
T_4
T_{10}
RH_2
T_2
MC_2
RH_1
T_9
T_{15}
T_{16}

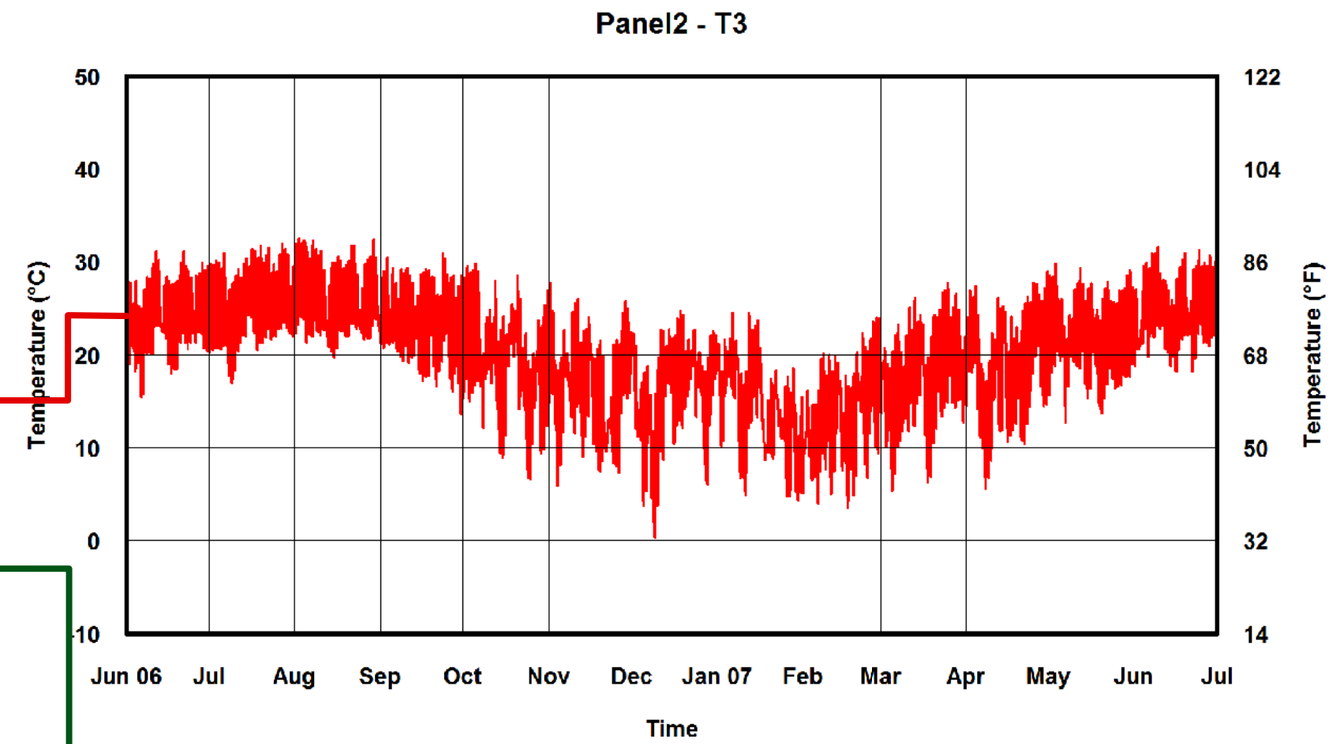
Panel2 - T3
Temperature (°C)
Temperature (°F)
50
40
30
20
10
0
-10
122
104
86
68
50
32
14
Jun 06
Jul
Aug
Sep
Oct
Nov
Dec
Jan 07
Feb
Mar
Apr
May
Jun
Jul
Time

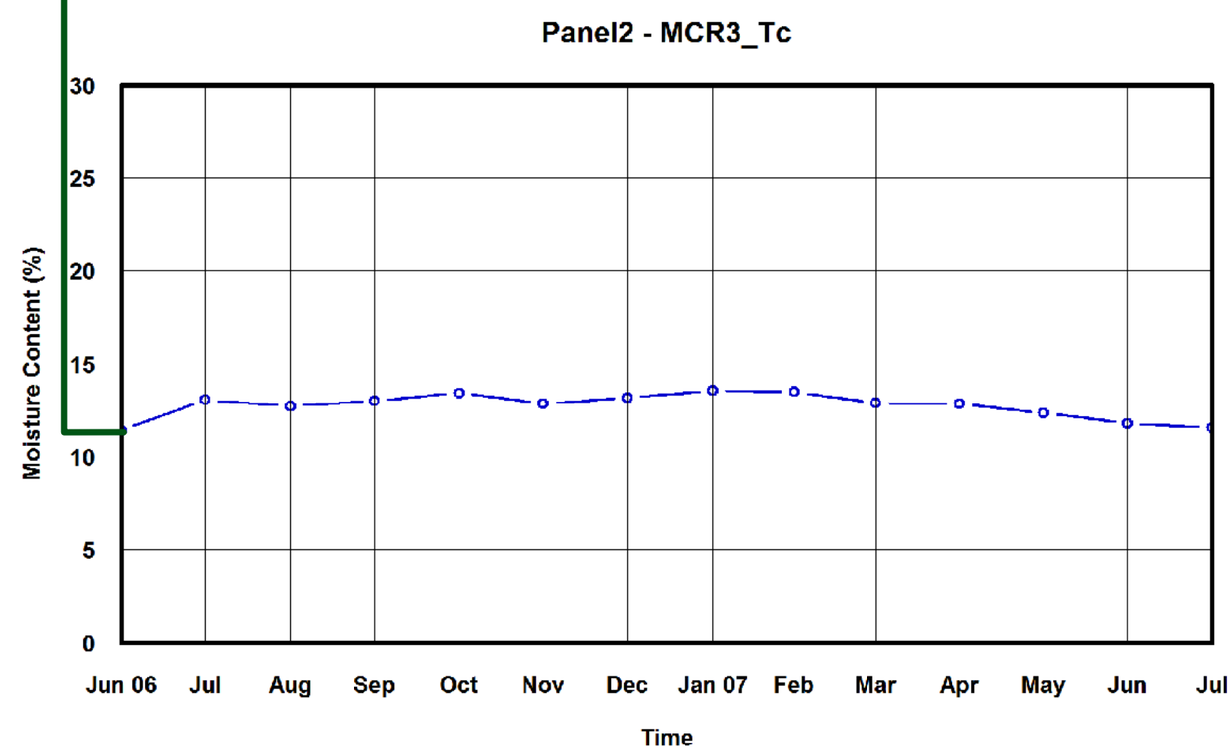
Panel2 - MCR3_Tc
Moisture Content (%)
30
25
20
15
10
5
0
Jun 06
Jul
Aug
Sep
Oct
Nov
Dec
Jan 07
Feb
Mar
Apr
May
Jun
Jul
Time

Panel 2

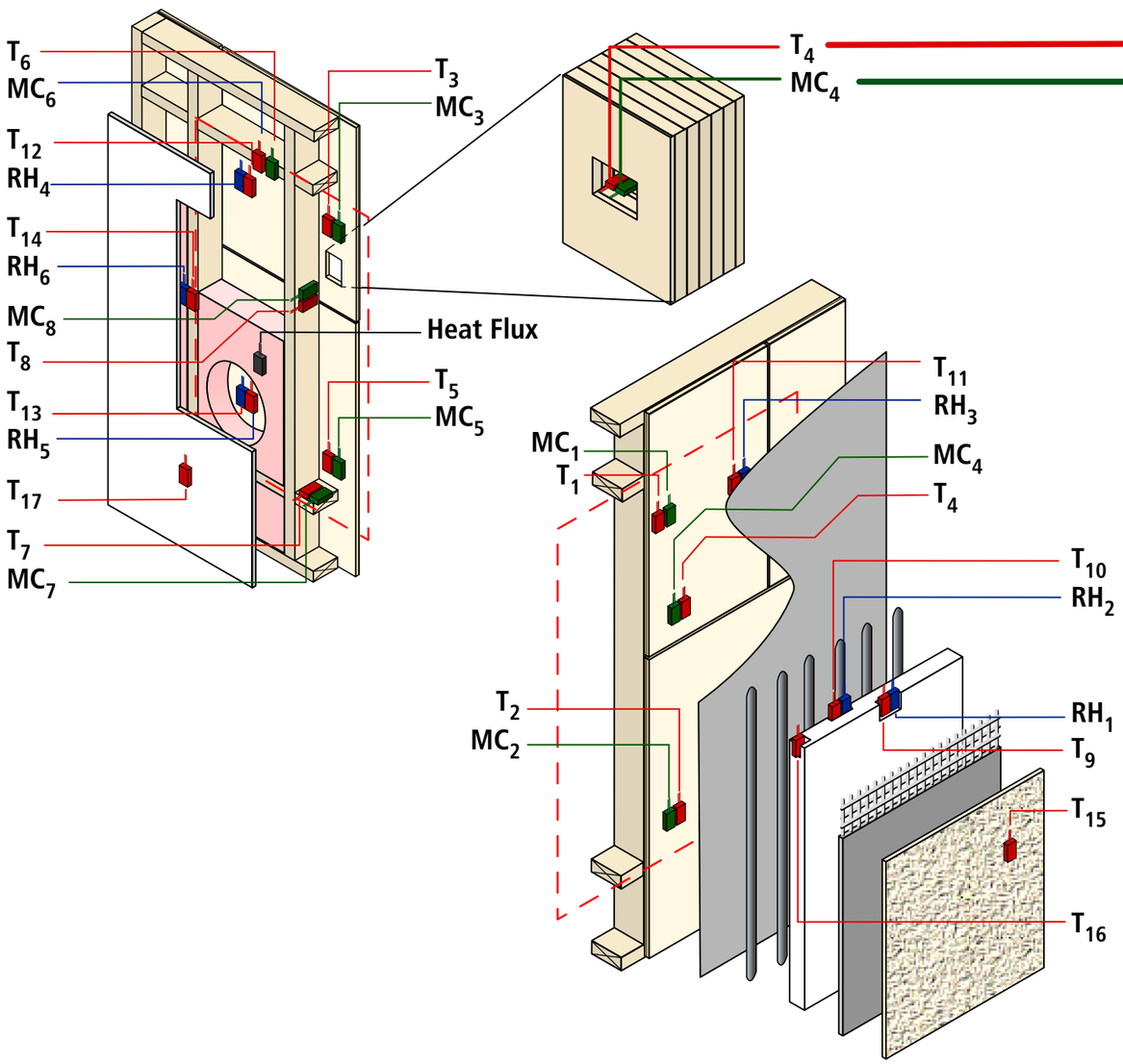
T_6
MC_6
T_{12}
RH_4
T_{14}
RH_6
MC_8
T_8
T_{13}
RH_5
T_{17}
T_7
MC_7
T_3
MC_3
Heat Flux
T_5
MC_5
T_4
MC_4
T_{11}
RH_3
MC_1
T_1
MC_4
T_4
T_{10}
RH_2
T_2
MC_2
RH_1
T_9
T_{15}
T_{16}

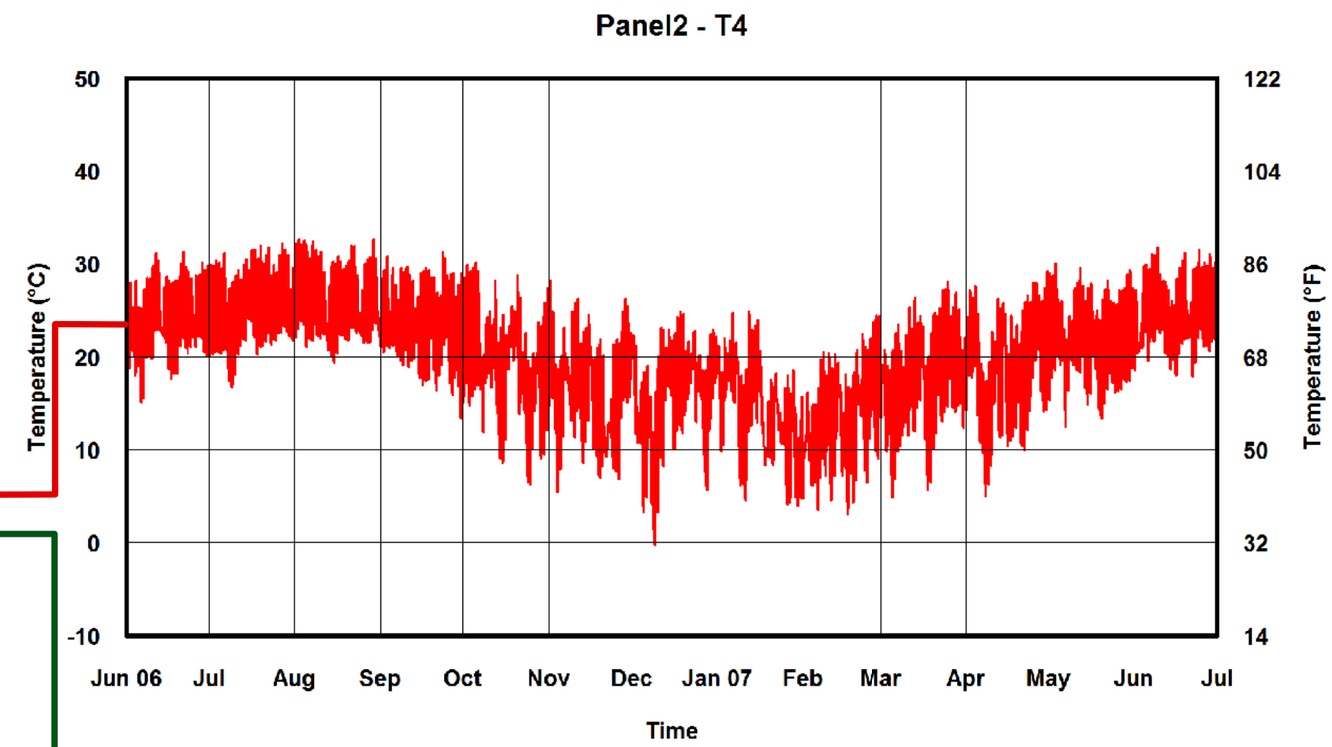
Panel2 - T4
Temperature (°C)
50
40
30
20
10
0
-10
Temperature (°F)
122
104
86
68
50
32
14
Jun 06
Jul
Aug
Sep
Oct
Nov
Dec
Jan 07
Feb
Mar
Apr
May
Jun
Jul
Time

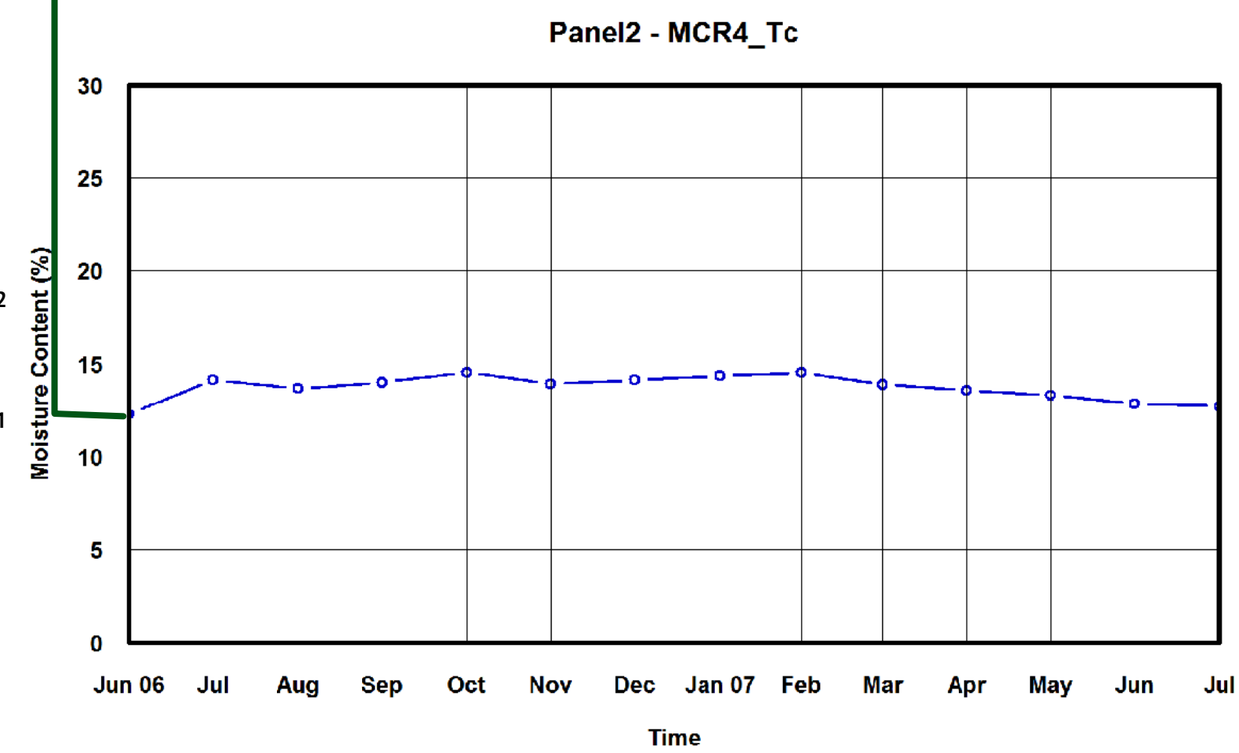
Panel2 - MCR4_Tc
Moisture Content (%)
30
25
20
15
10
5
0
Jun 06
Jul
Aug
Sep
Oct
Nov
Dec
Jan 07
Feb
Mar
Apr
May
Jun
Jul
Time

Panel 2

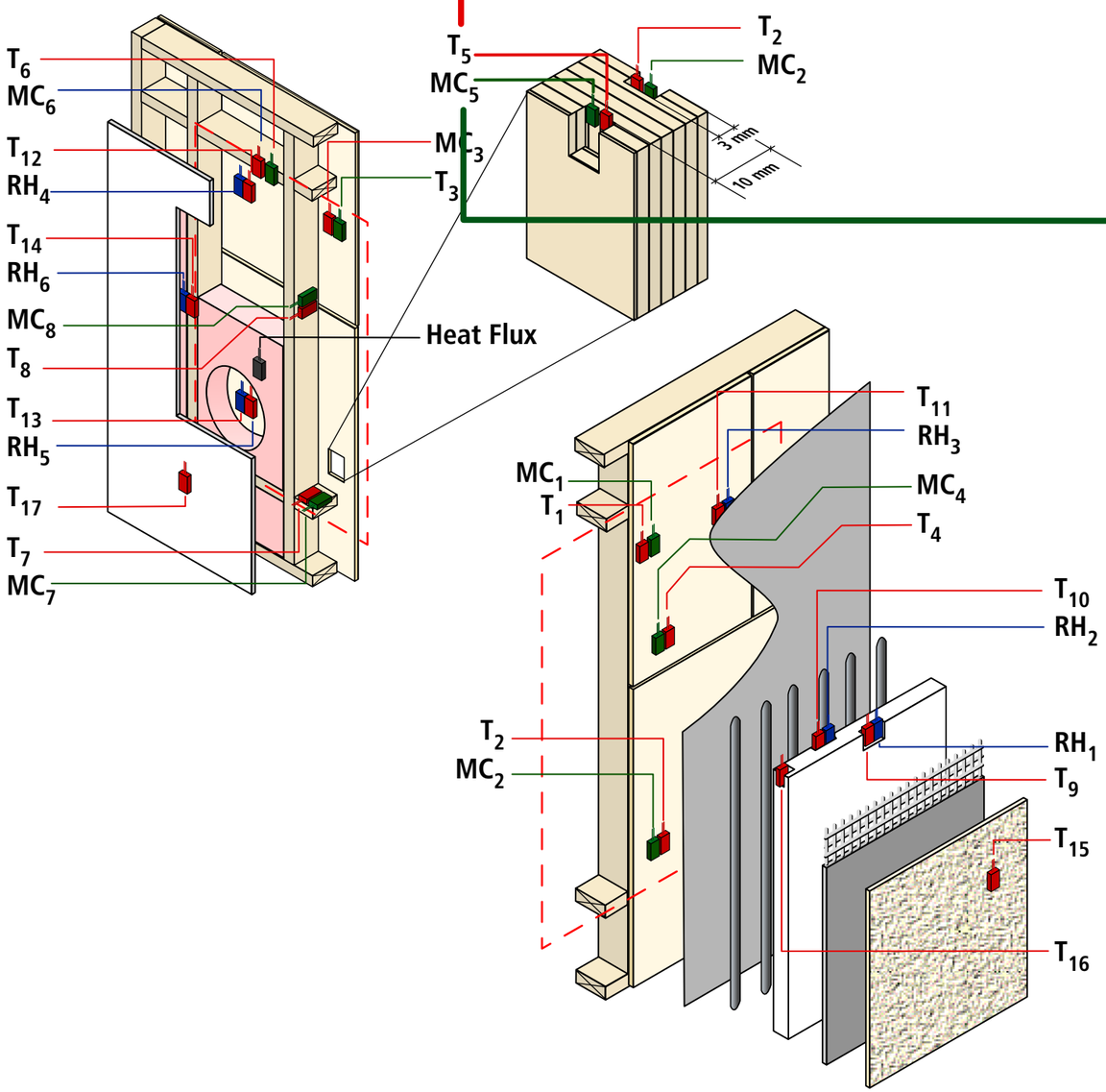
T_6
MC_6
T_{12}
RH_4
T_{14}
RH_6
MC_8
T_8
T_{13}
RH_5
T_{17}
T_7
MC_7
T_5
MC_5
MC_3
T_3
T_2
MC_2
3 mm
10 mm
Heat Flux
T_{11}
RH_3
MC_1
T_1
MC_4
T_4
T_{10}
RH_2
T_2
MC_2
RH_1
T_9
T_{15}
T_{16}

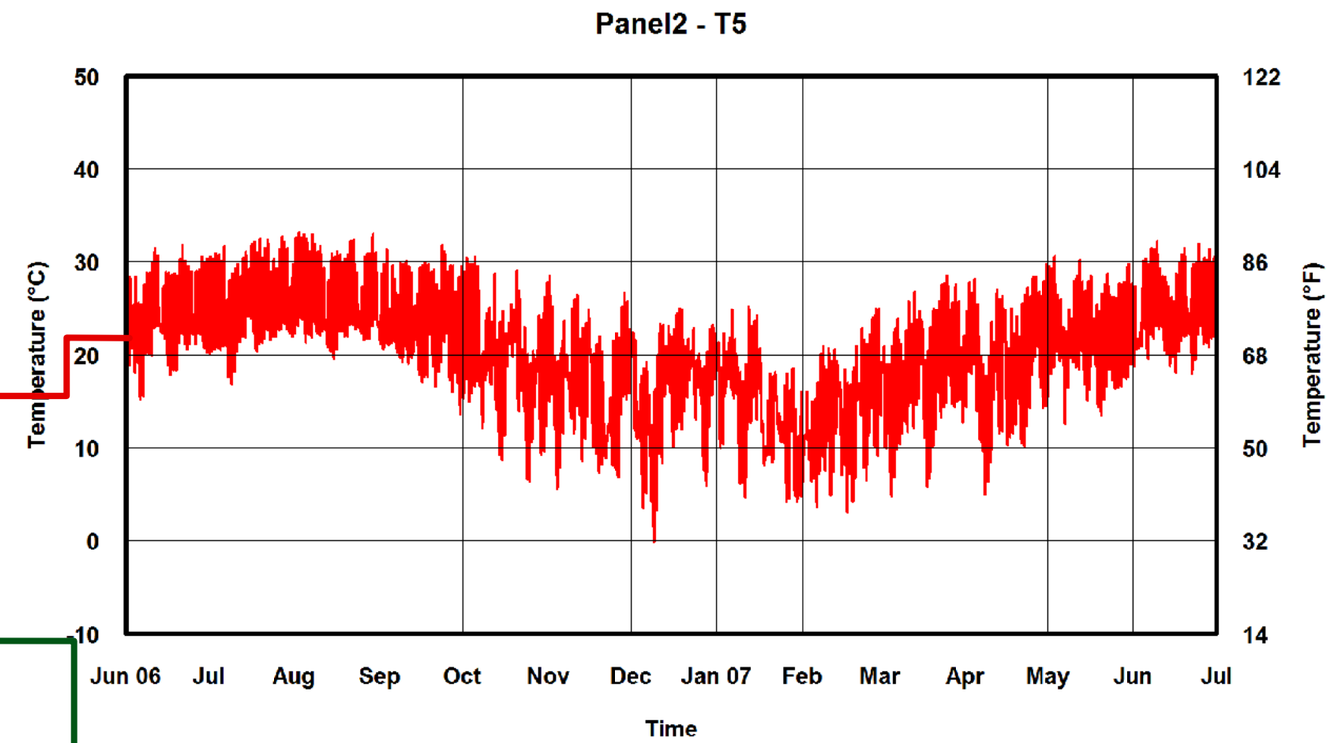
Panel2 - T5
Temperature (°C)
Temperature (°F)
50
40
30
20
10
0
-10
122
104
86
68
50
32
14
Jun 06
Jul
Aug
Sep
Oct
Nov
Dec
Jan 07
Feb
Mar
Apr
May
Jun
Jul
Time

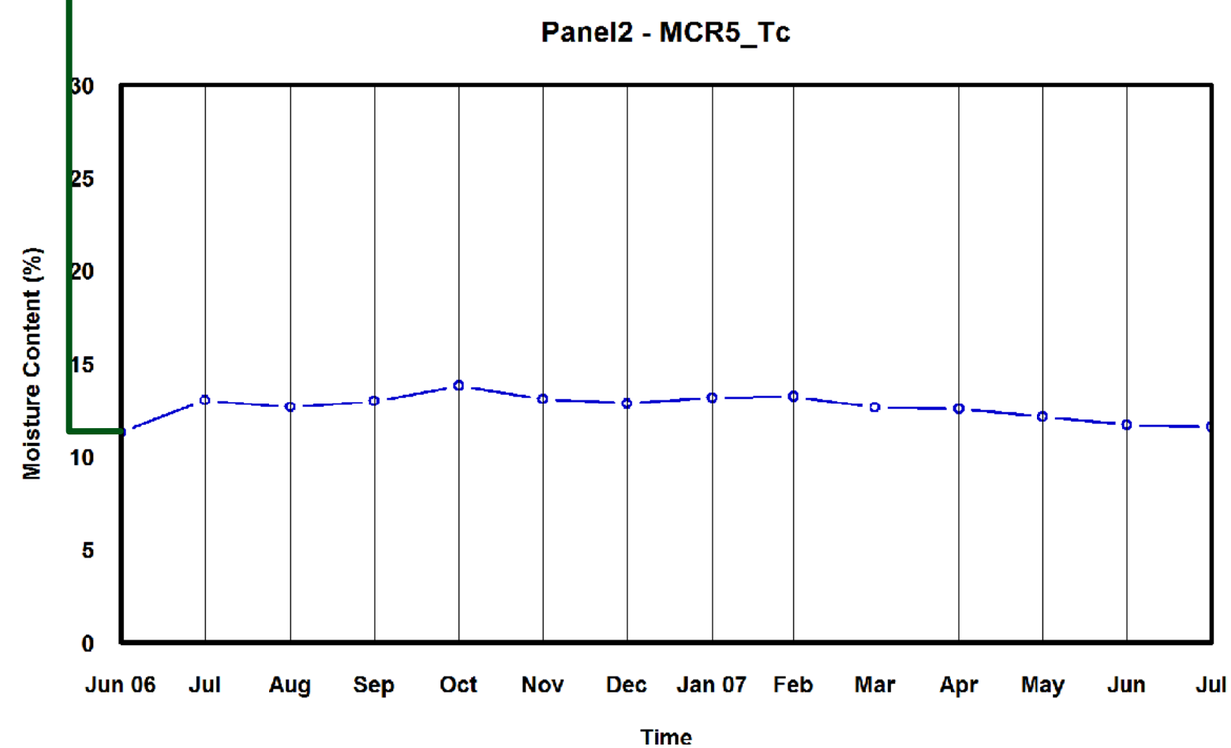
Panel2 - MCR5_Tc
Moisture Content (%)
30
25
20
15
10
5
0
Jun 06
Jul
Aug
Sep
Oct
Nov
Dec
Jan 07
Feb
Mar
Apr
May
Jun
Jul
Time

Panel 2

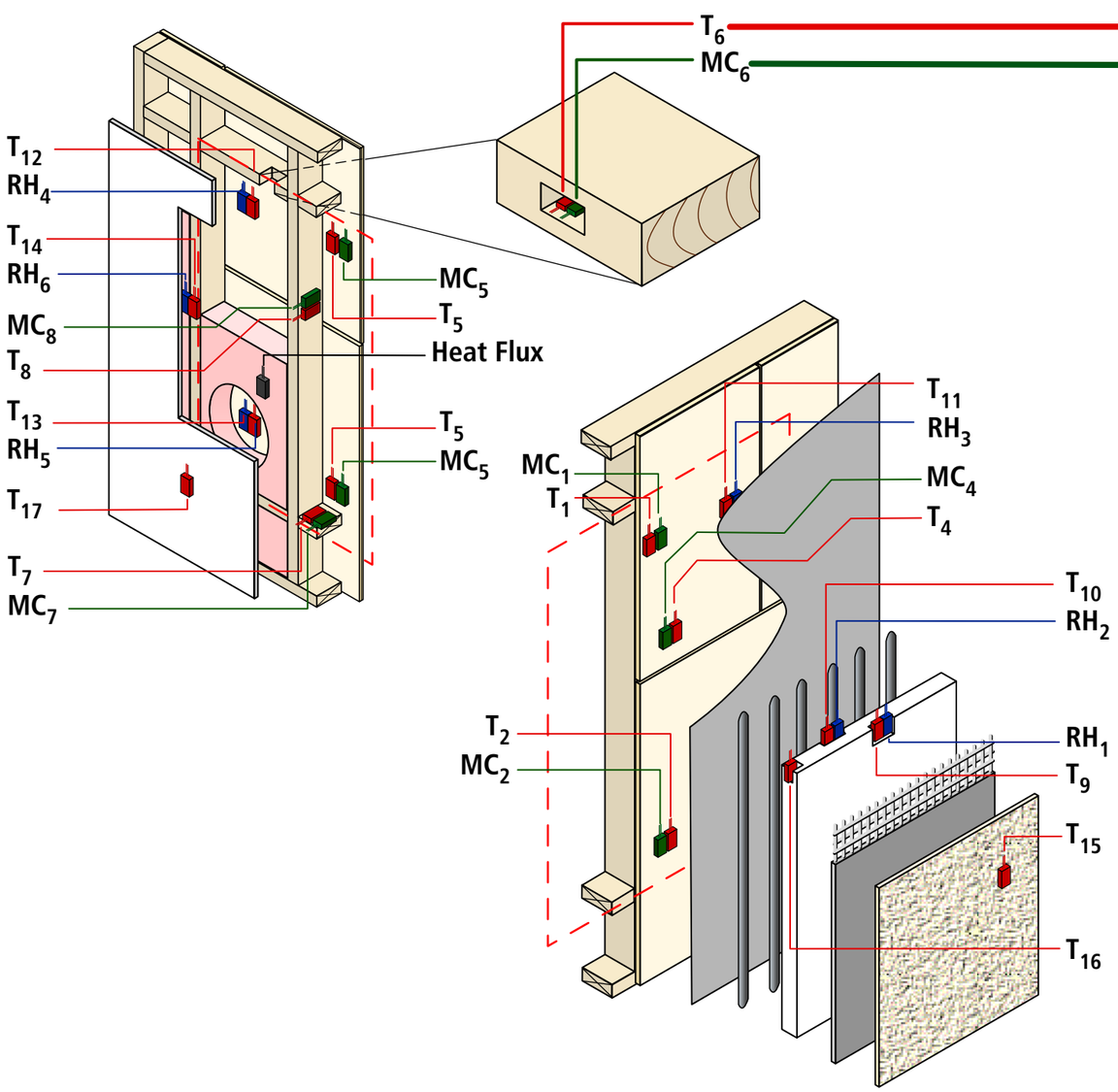
T_6
MC_6
T_{12}
RH_4
T_{14}
RH_6
MC_8
T_8
T_{13}
RH_5
T_{17}
T_7
MC_7
MC_5
T_5
Heat Flux
T_5
MC_5
MC_1
T_1
T_{11}
RH_3
MC_4
T_4
T_{10}
RH_2
T_2
MC_2
RH_1
T_9
T_{15}
T_{16}

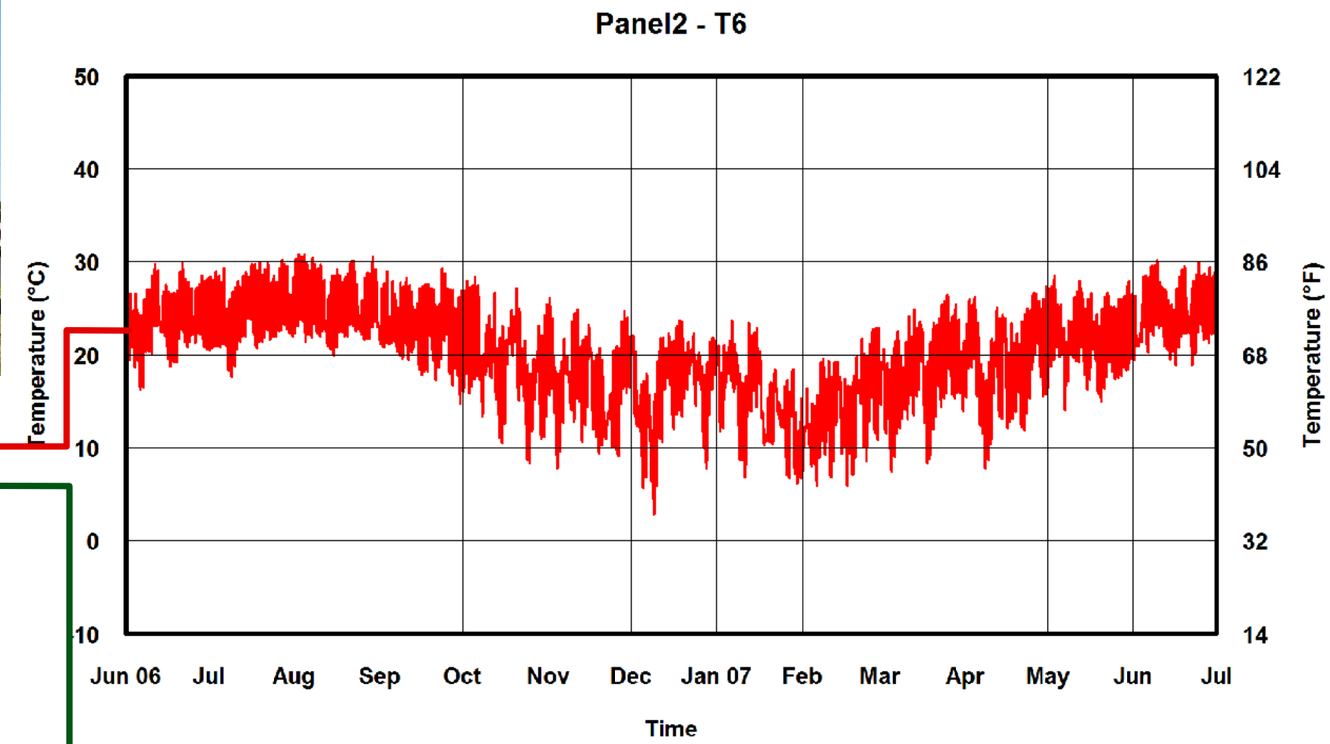
Panel2 - T6
Temperature (°C)
50
40
30
20
10
0
-10
Temperature (°F)
122
104
86
68
50
32
14
Jun 06
Jul
Aug
Sep
Oct
Nov
Dec
Jan 07
Feb
Mar
Apr
May
Jun
Jul
Time

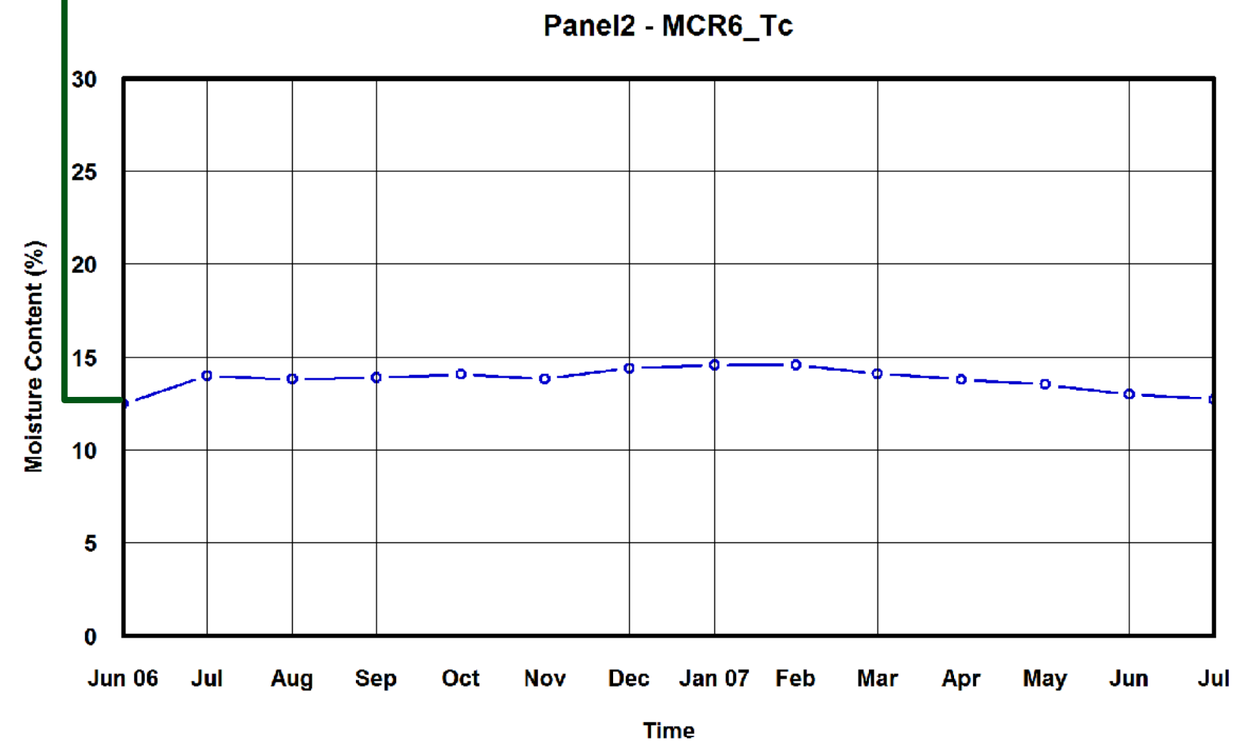
Panel2 - MCR6_Tc
Moisture Content (%)
30
25
20
15
10
5
0
Jun 06
Jul
Aug
Sep
Oct
Nov
Dec
Jan 07
Feb
Mar
Apr
May
Jun
Jul
Time

Panel 2

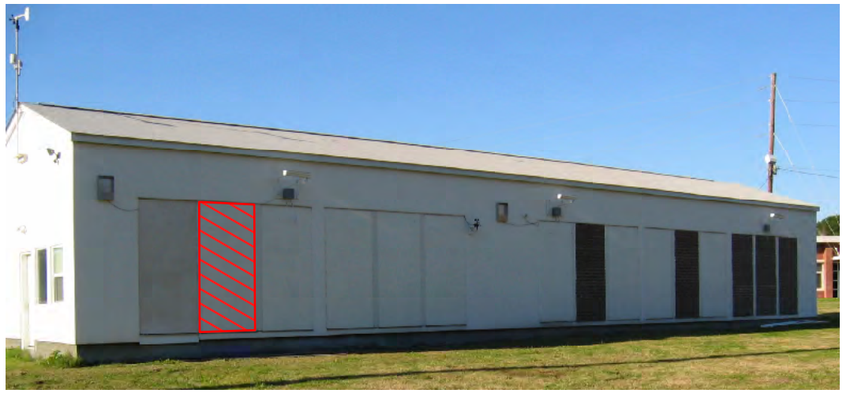

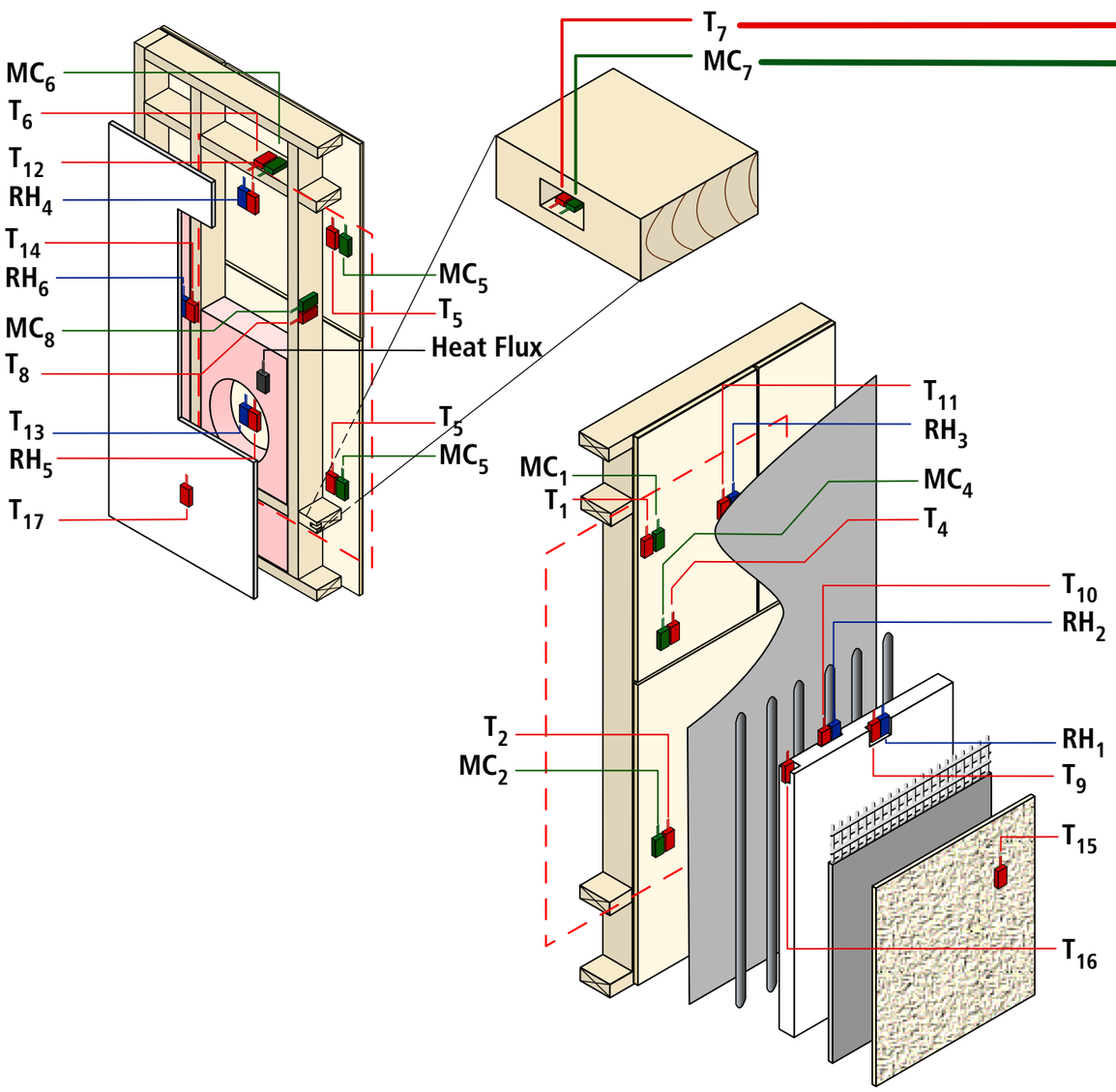
MC6
T6
T12
RH4
T14
RH6
MC8
T8
T13
RH5
T17
T7
MC7
MC5
T5
Heat Flux
T5
MC5
T11
RH3
MC1
T1
MC4
T4
T10
RH2
T2
MC2
RH1
T9
T15
T16

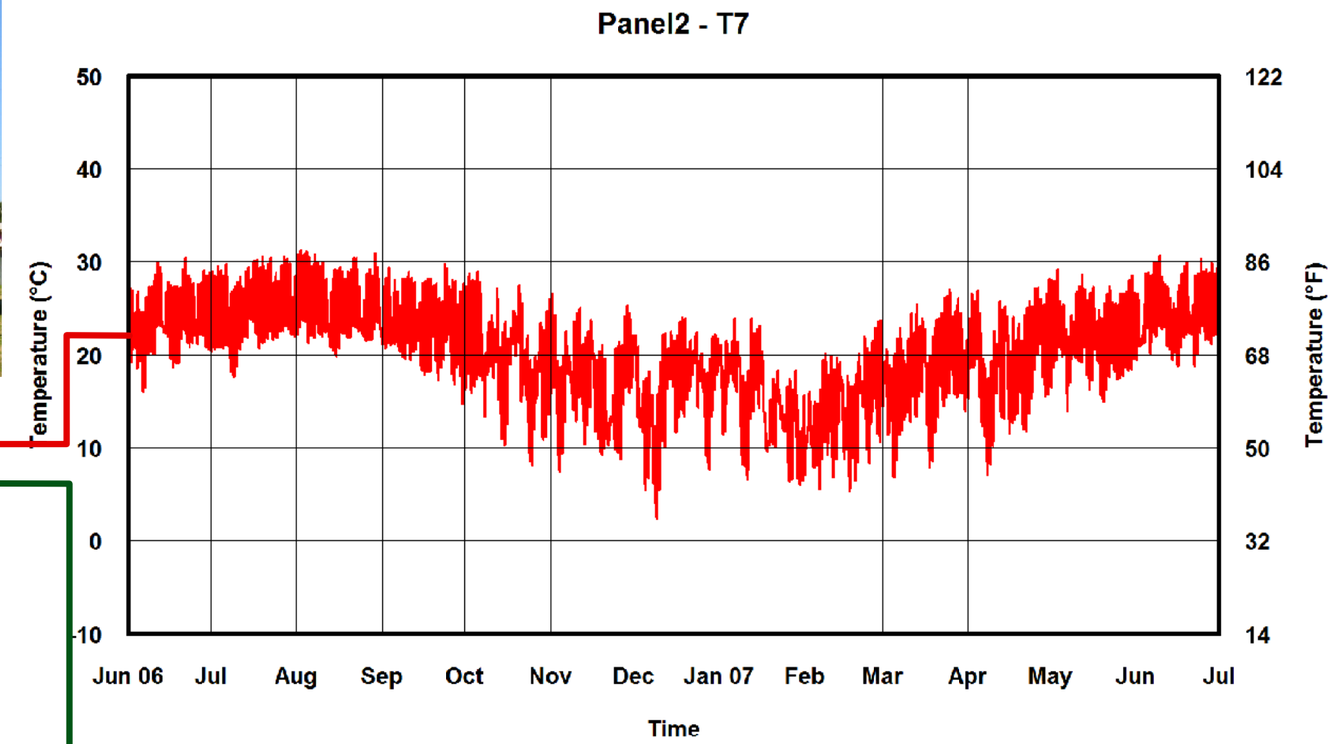
Panel2 - T7
Temperature (°C)
Temperature (°F)
50
40
30
20
10
0
-10
122
104
86
68
50
32
14
Jun 06
Jul
Aug
Sep
Oct
Nov
Dec
Jan 07
Feb
Mar
Apr
May
Jun
Jul
Time

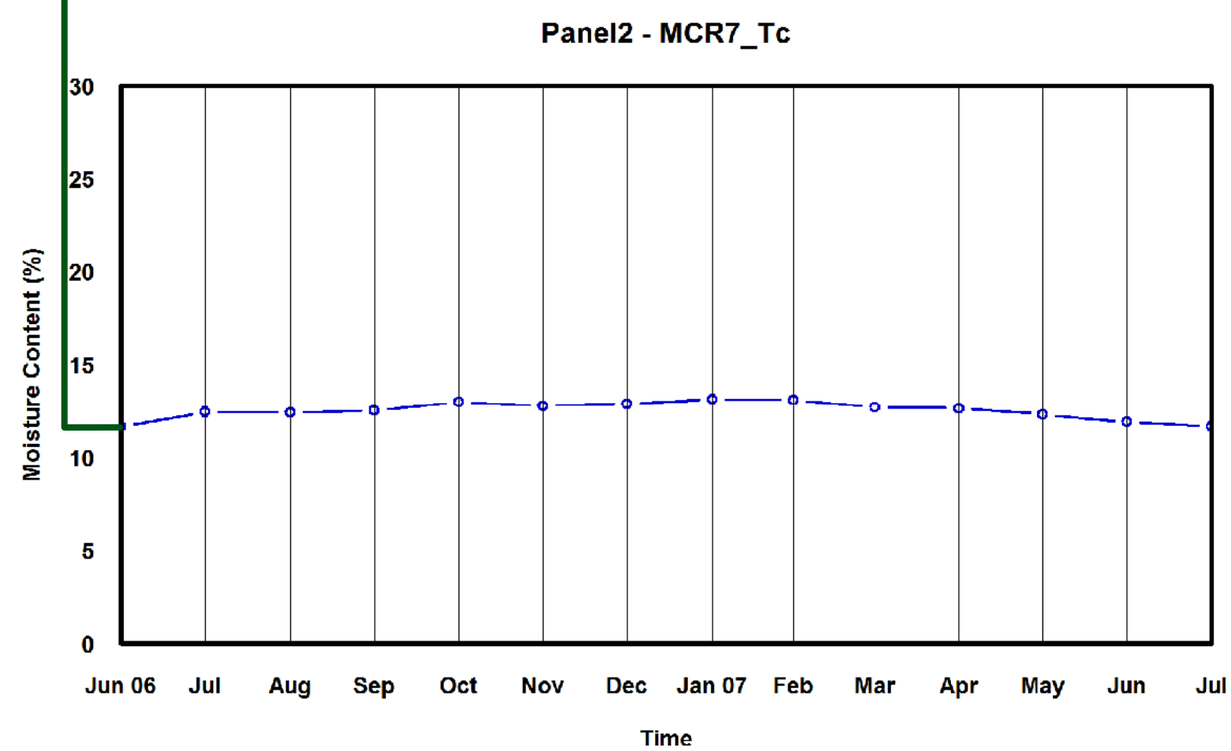
Panel2 - MCR7_Tc
Moisture Content (%)
30
25
20
15
10
5
0
Jun 06
Jul
Aug
Sep
Oct
Nov
Dec
Jan 07
Feb
Mar
Apr
May
Jun
Jul
Time

Panel 2

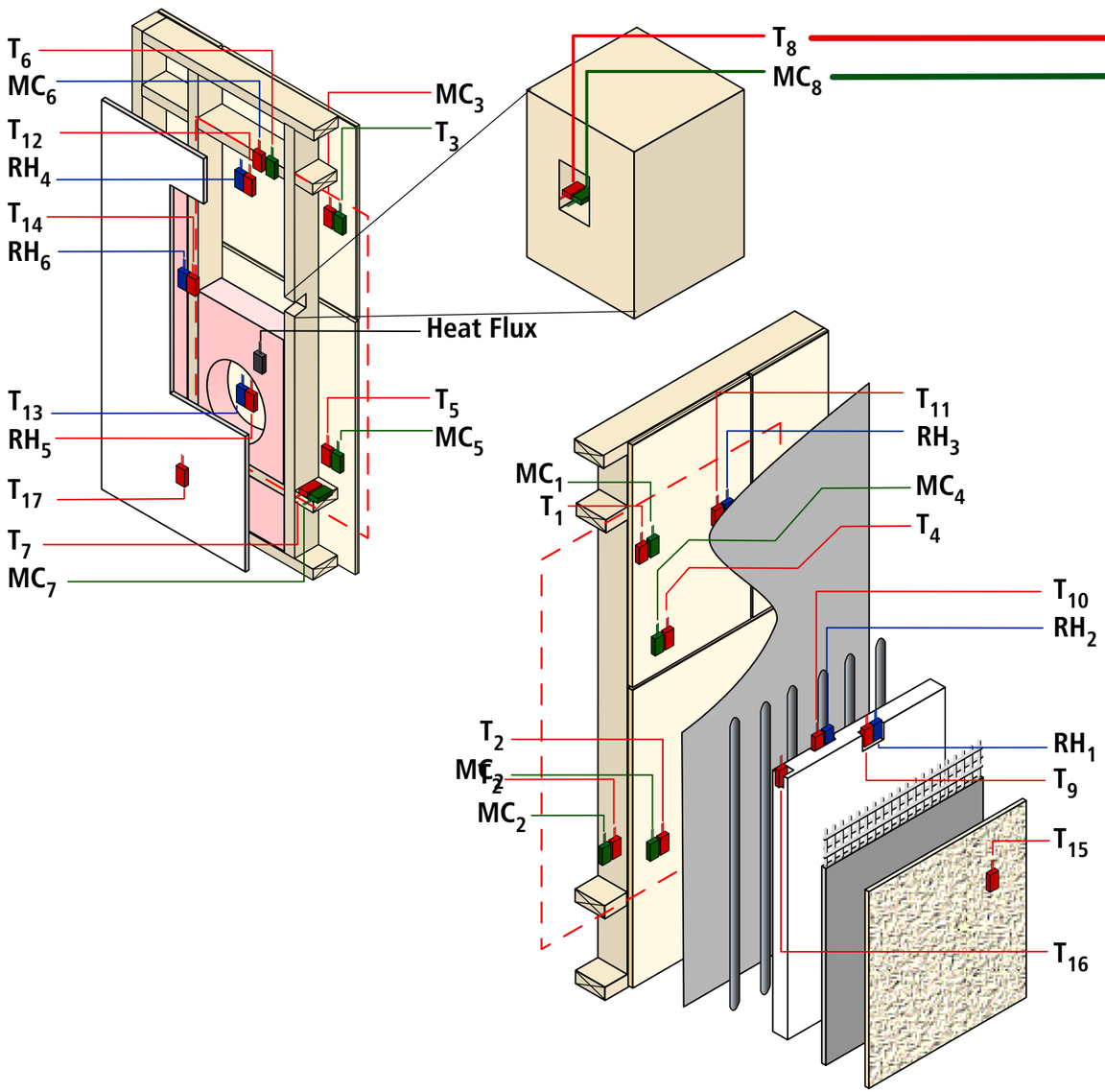
T_6
MC_6
T_{12}
RH_4
T_{14}
RH_6
MC_3
T_3
T_8
MC_8
Heat Flux
T_{13}
RH_5
T_{17}
T_7
MC_7
T_5
MC_5
T_{11}
RH_3
MC_1
T_1
MC_4
T_4
T_{10}
RH_2
T_2
MC_2
RH_1
T_9
T_{15}
T_{16}

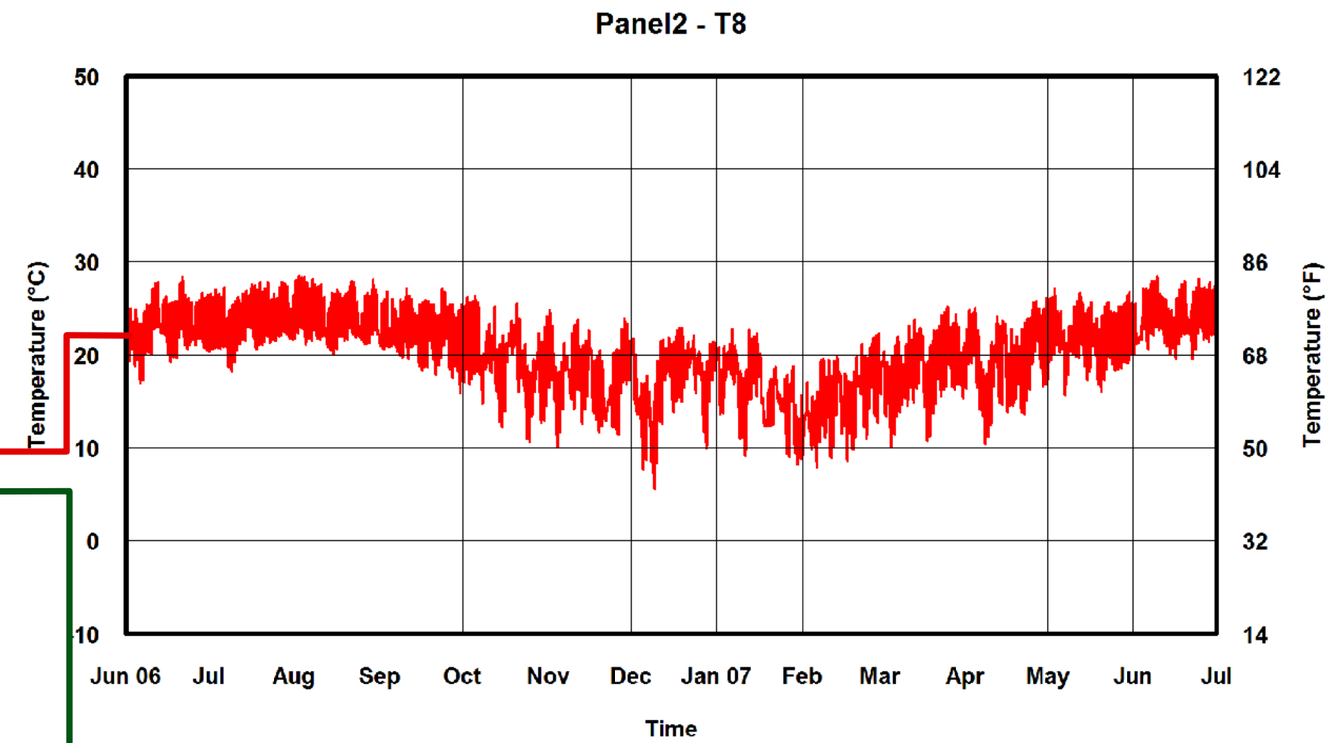
Panel2 - T8
Temperature (°C)
Temperature (°F)
50
40
30
20
10
0
-10
122
104
86
68
50
32
14
Jun 06
Jul
Aug
Sep
Oct
Nov
Dec
Jan 07
Feb
Mar
Apr
May
Jun
Jul
Time

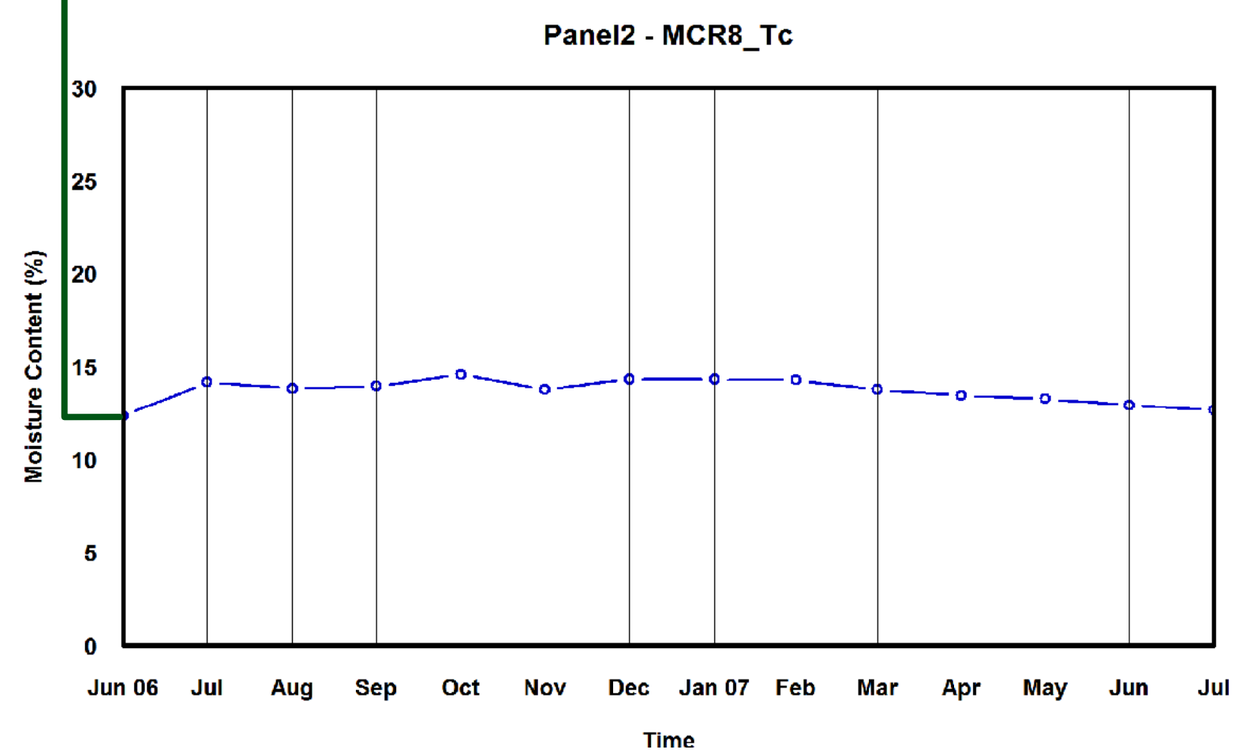
Panel2 - MCR8_Tc
Moisture Content (%)
30
25
20
15
10
5
0
Jun 06
Jul
Aug
Sep
Oct
Nov
Dec
Jan 07
Feb
Mar
Apr
May
Jun
Jul
Time

Panel 2

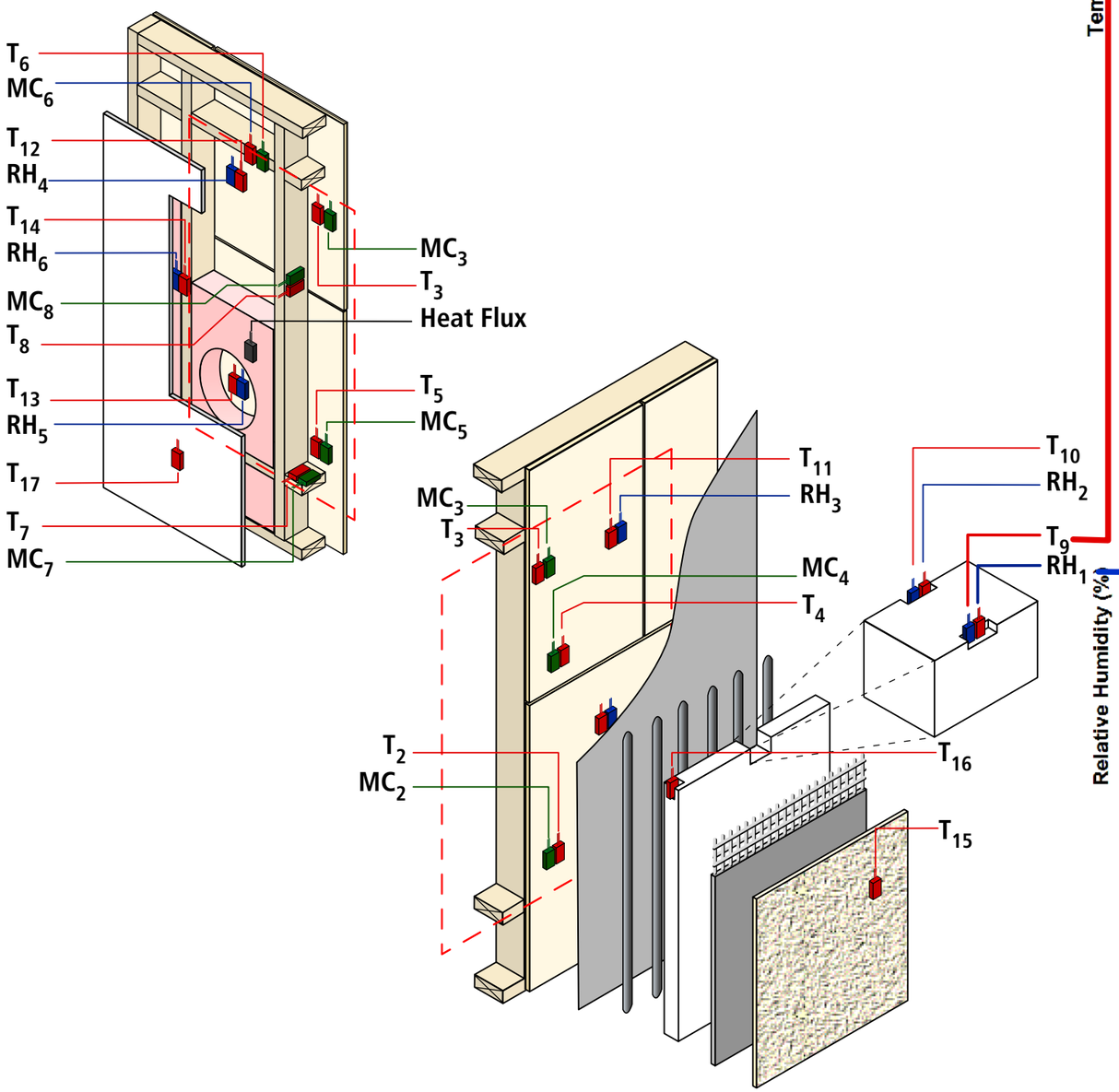
T_6
MC_6
T_{12}
RH_4
T_{14}
RH_6
MC_8
T_8
T_{13}
RH_5
T_{17}
T_7
MC_7
MC_3
T_3
Heat Flux
T_5
MC_5
T_{11}
RH_3
MC_3
T_3
MC_4
T_4
T_2
MC_2
T_{10}
RH_2
T_9
RH_1
T_{16}
T_{15}

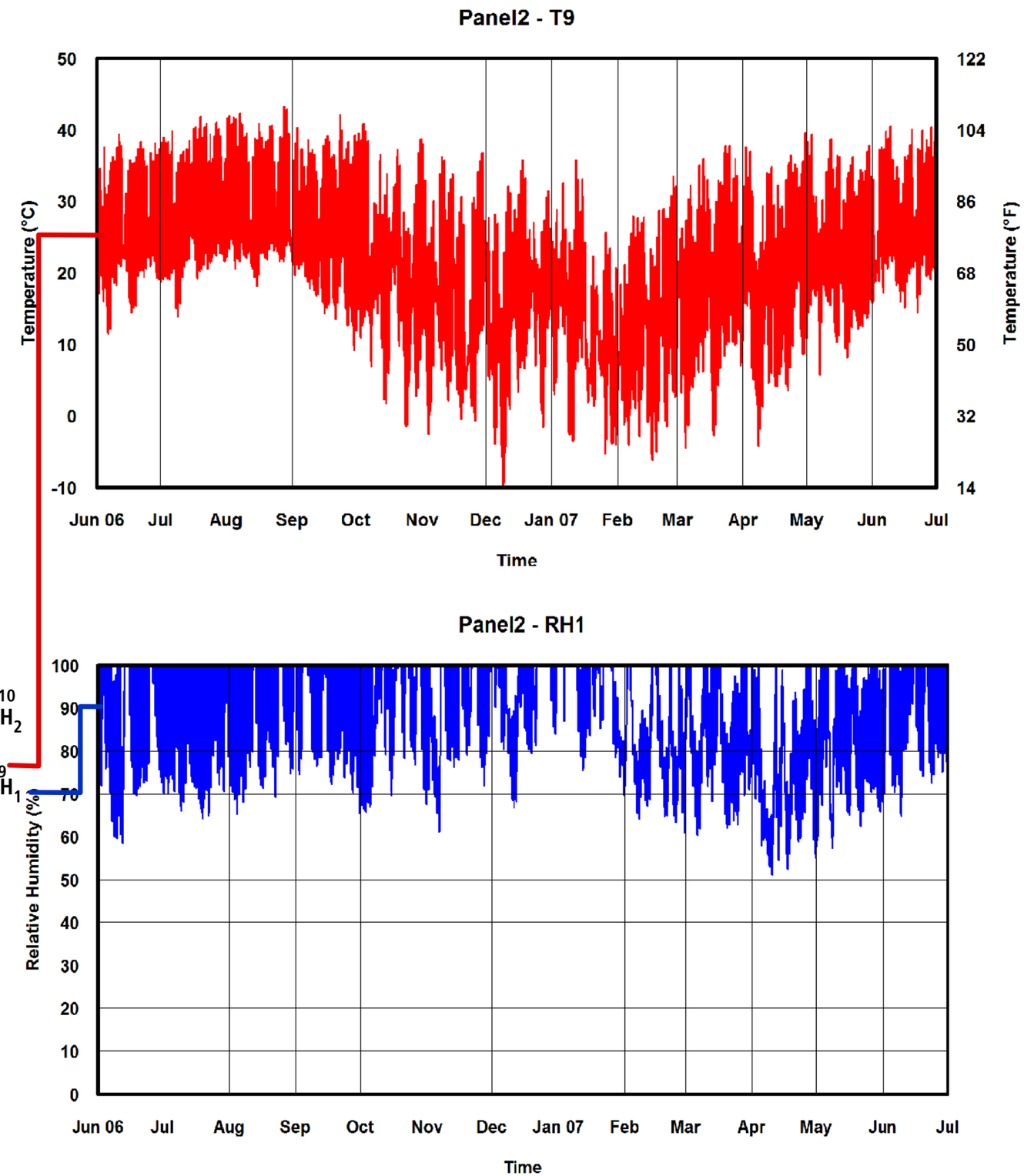
Panel2 - T9
Temperature (°C)
Temperature (°F)
50
40
30
20
10
0
-10
122
104
86
68
50
32
14
Jun 06
Jul
Aug
Sep
Oct
Nov
Dec
Jan 07
Feb
Mar
Apr
May
Jun
Jul
Time
Panel2 - RH1
Relative Humidity (%)
100
90
80
70
60
50
40
30
20
10
0
Jun 06
Jul
Aug
Sep
Oct
Nov
Dec
Jan 07
Feb
Mar
Apr
May
Jun
Jul
Time

Panel 2

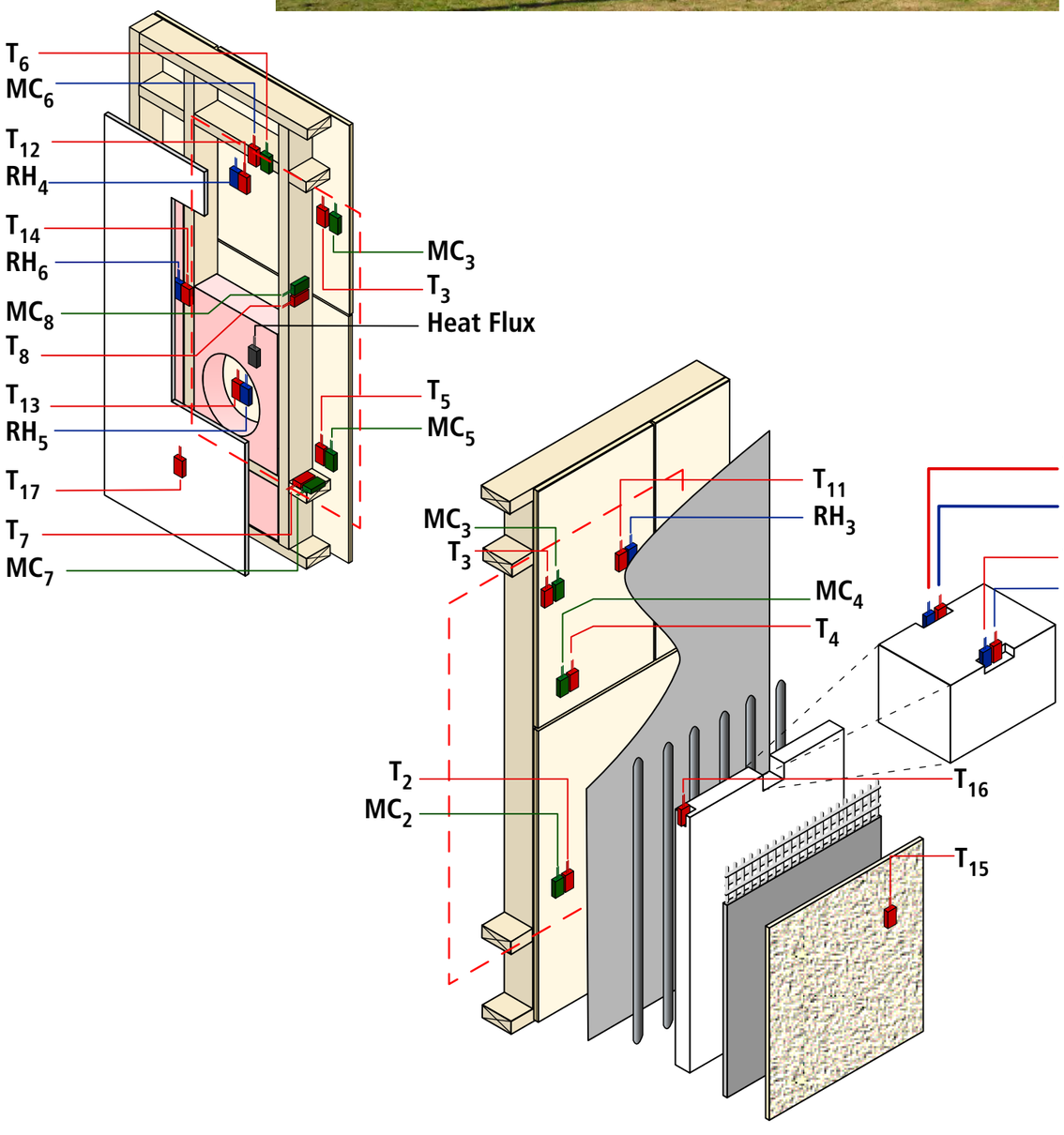
T_6
MC_6
T_{12}
RH_4
T_{14}
RH_6
MC_8
T_8
T_{13}
RH_5
T_{17}
T_7
MC_7
MC_3
T_3
Heat Flux
T_5
MC_5
T_{11}
RH_3
MC_4
T_4
T_{10}
RH_2
T_9
RH_1
T_{16}
T_{15}
T_2
MC_2

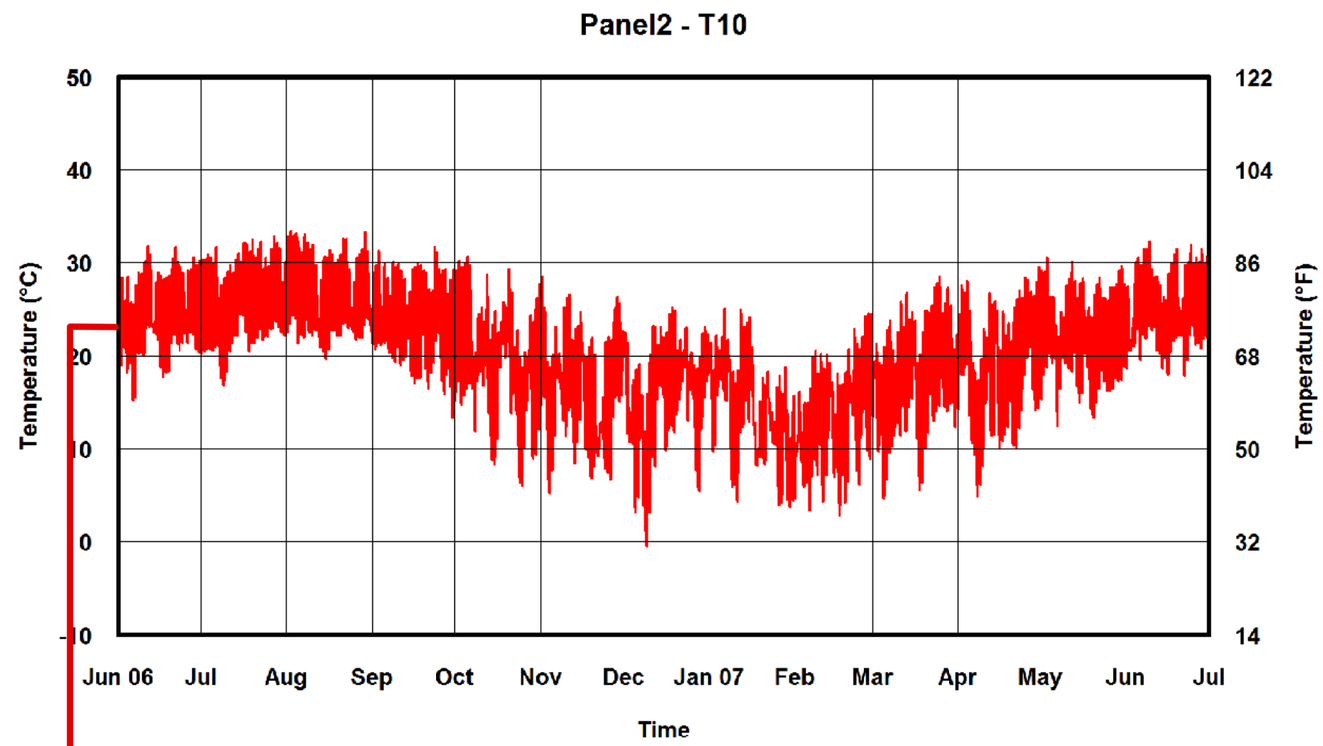
Panel2 - T10
Temperature (°C)
Temperature (°F)
50
40
30
20
10
0
-10
122
104
86
68
50
32
14
Jun 06
Jul
Aug
Sep
Oct
Nov
Dec
Jan 07
Feb
Mar
Apr
May
Jun
Jul
Time

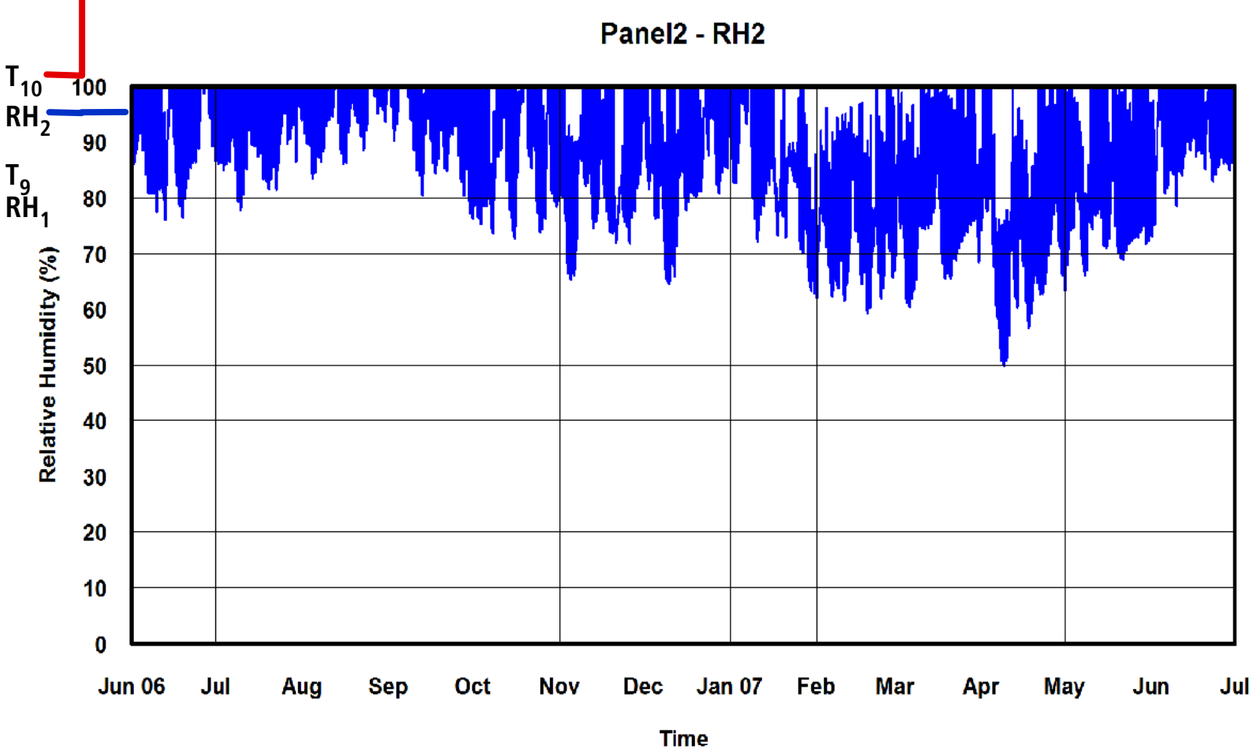
Panel2 - RH2
Relative Humidity (%)
100
90
80
70
60
50
40
30
20
10
0
Jun 06
Jul
Aug
Sep
Oct
Nov
Dec
Jan 07
Feb
Mar
Apr
May
Jun
Jul
Time

Panel 2

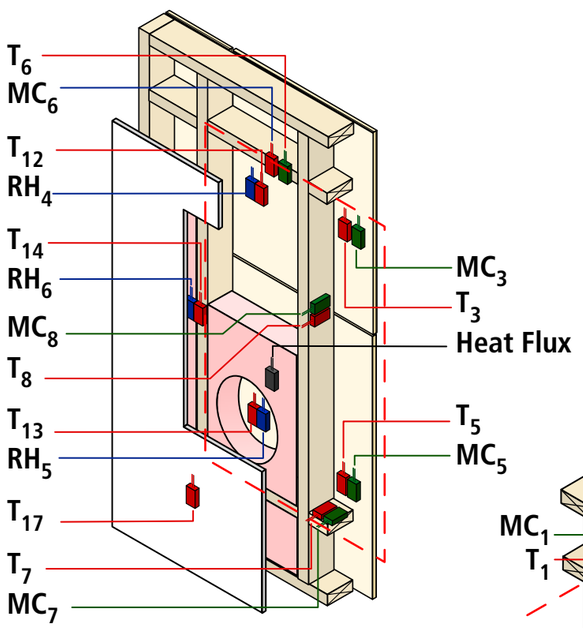
T_6
MC_6
T_{12}
RH_4
T_{14}
RH_6
MC_8
T_8
T_{13}
RH_5
T_{17}
T_7
MC_7
MC_3
T_3
Heat Flux
T_5
MC_5

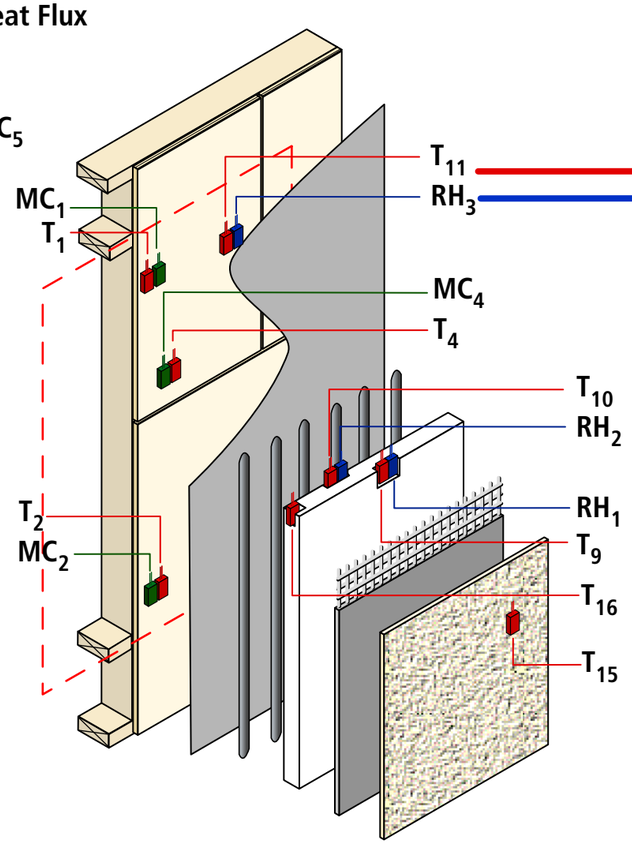
T_{11}
RH_3
MC_1
T_1
MC_4
T_4
T_{10}
RH_2
RH_1
T_9
T_{16}
T_{15}
T_2
MC_2

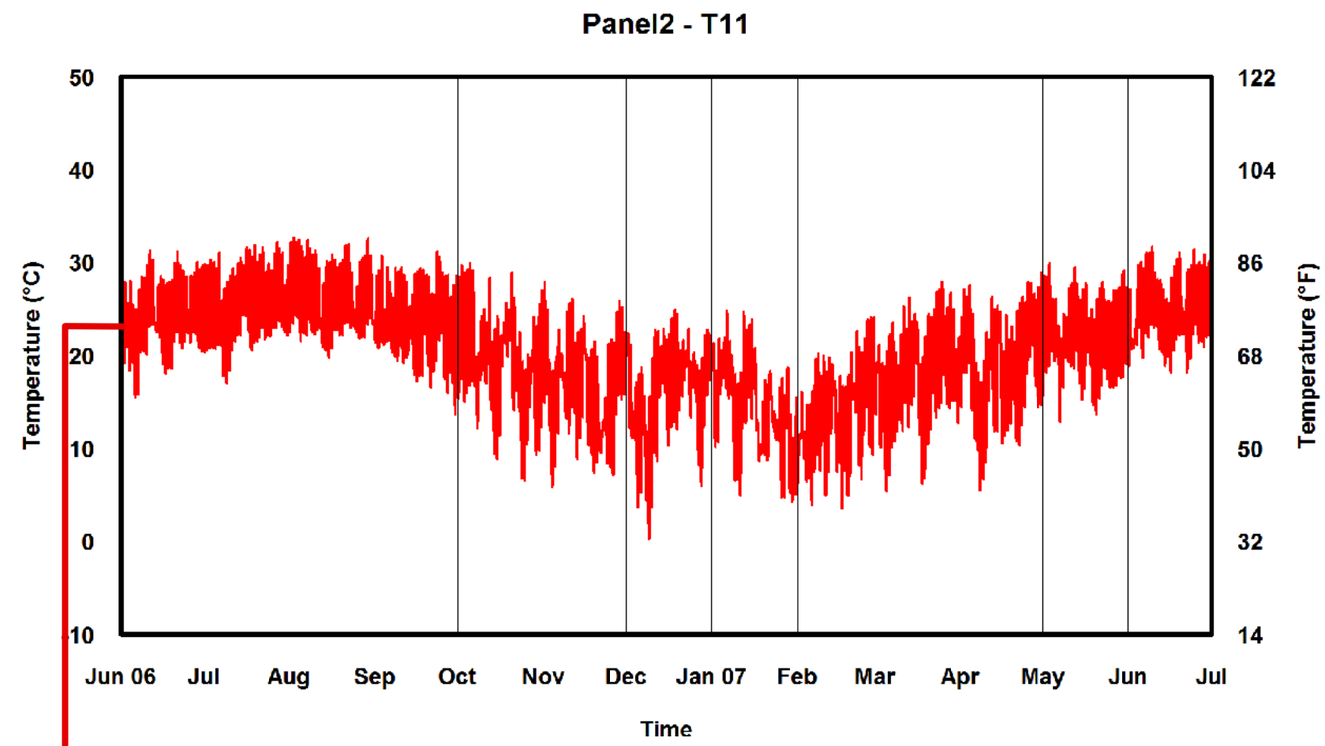
Panel2 - T11
Temperature (°C)
Temperature (°F)
50
40
30
20
10
0
-10
122
104
86
68
50
32
14
Jun 06
Jul
Aug
Sep
Oct
Nov
Dec
Jan 07
Feb
Mar
Apr
May
Jun
Jul
Time

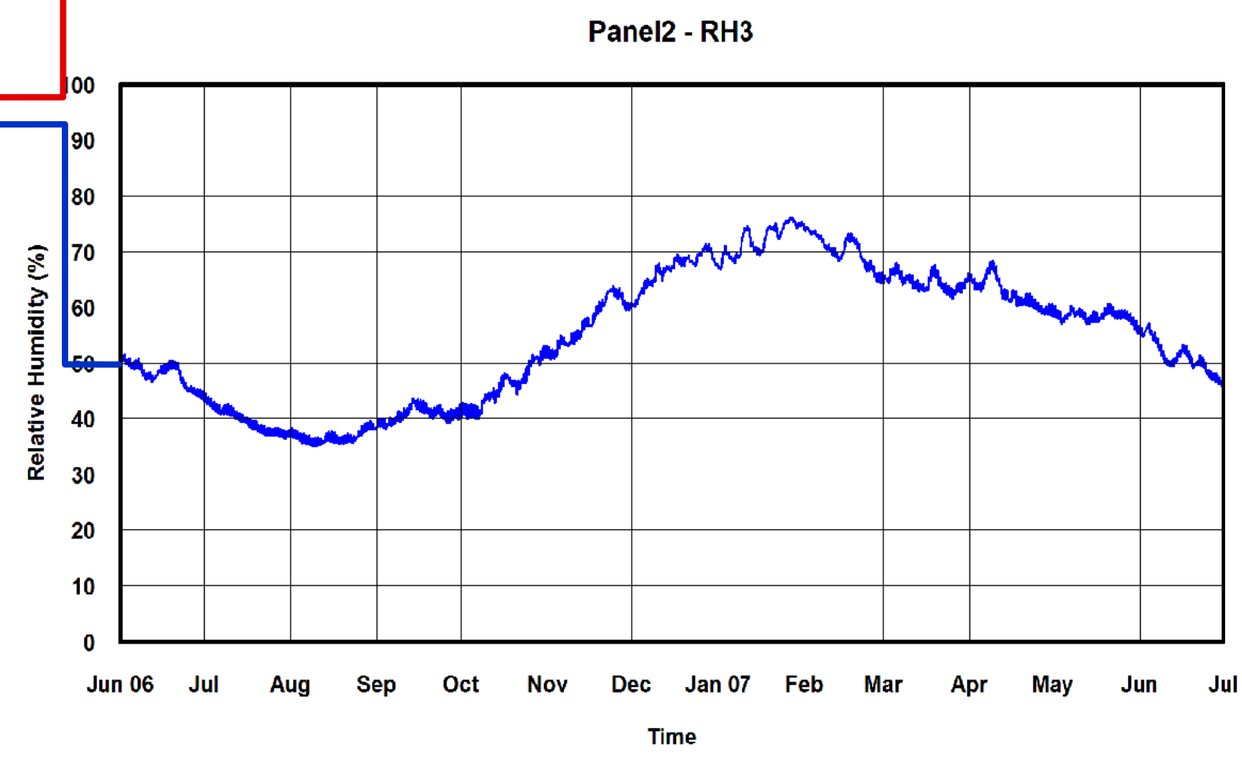
Panel2 - RH3
Relative Humidity (%)
100
90
80
70
60
50
40
30
20
10
0
Jun 06
Jul
Aug
Sep
Oct
Nov
Dec
Jan 07
Feb
Mar
Apr
May
Jun
Jul
Time

Panel 2

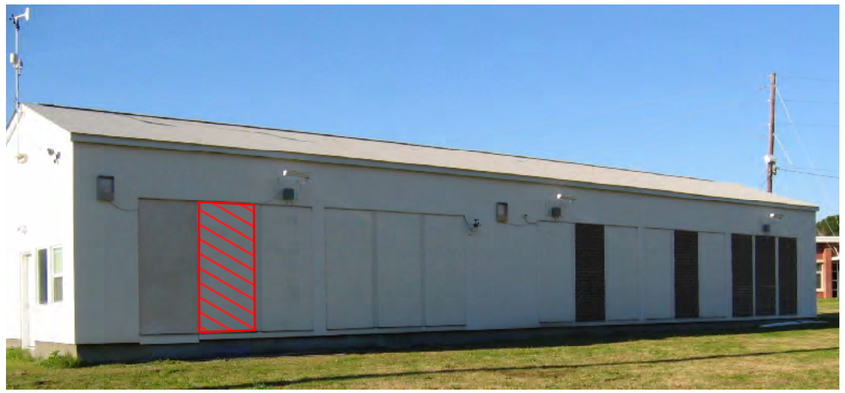

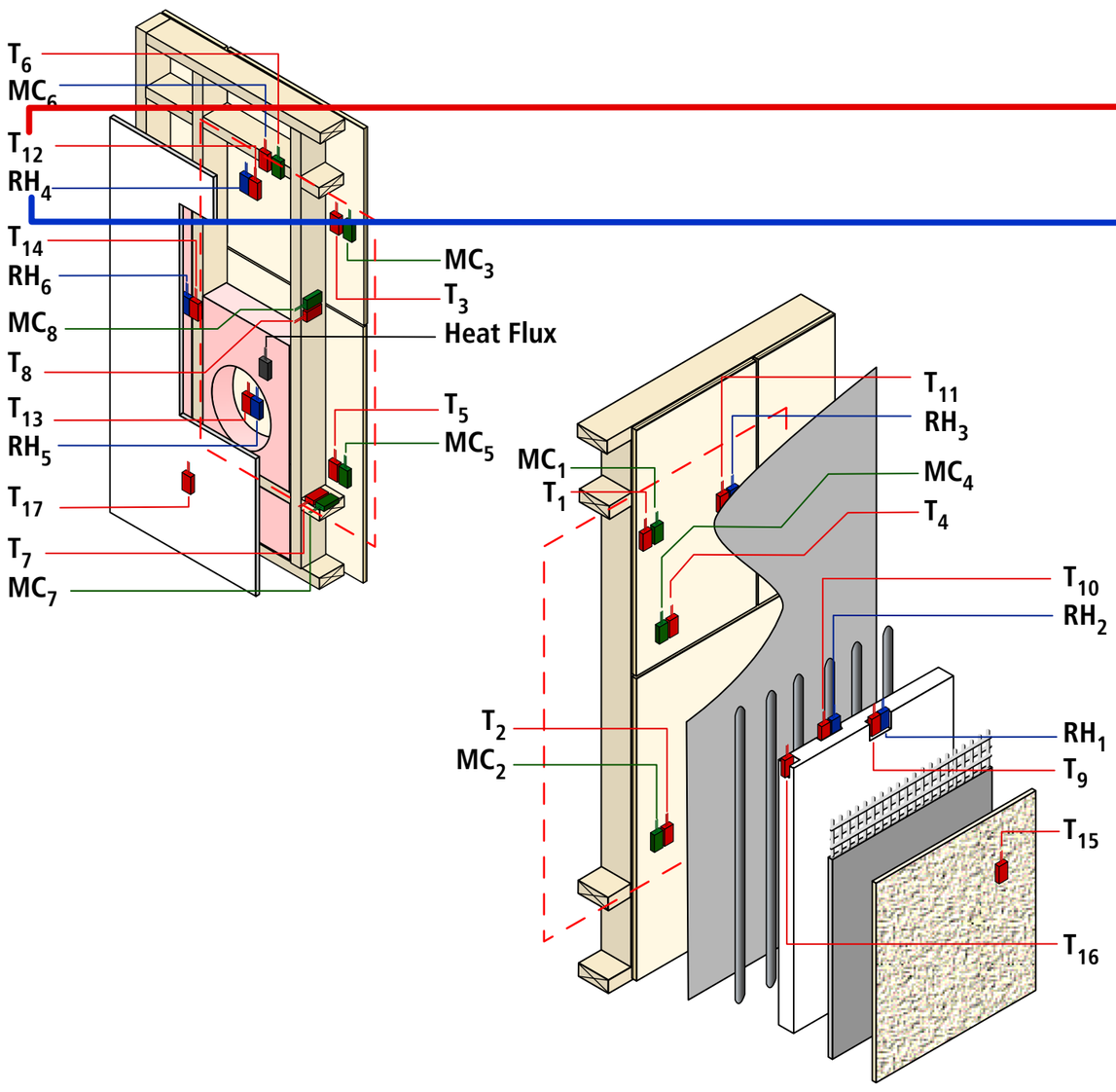
T_6
MC_6
T_{12}
RH_4
T_{14}
RH_6
MC_8
T_8
T_{13}
RH_5
T_{17}
T_7
MC_7
MC_3
T_3
Heat Flux
T_5
MC_5
MC_1
T_1
T_2
MC_2
T_{11}
RH_3
MC_4
T_4
T_{10}
RH_2
RH_1
T_9
T_{15}
T_{16}

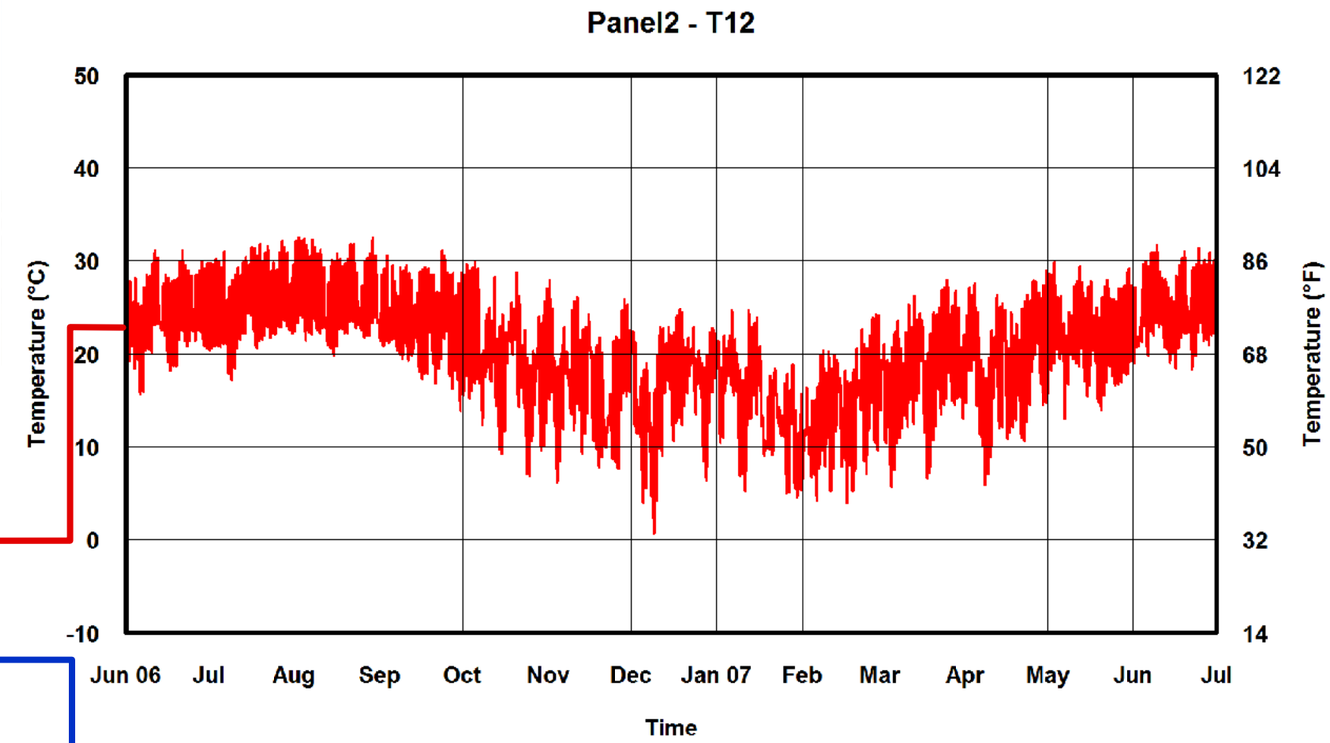
Panel2 - T12
Temperature (°C)
Temperature (°F)
50
40
30
20
10
0
-10
122
104
86
68
50
32
14
Jun 06
Jul
Aug
Sep
Oct
Nov
Dec
Jan 07
Feb
Mar
Apr
May
Jun
Jul
Time

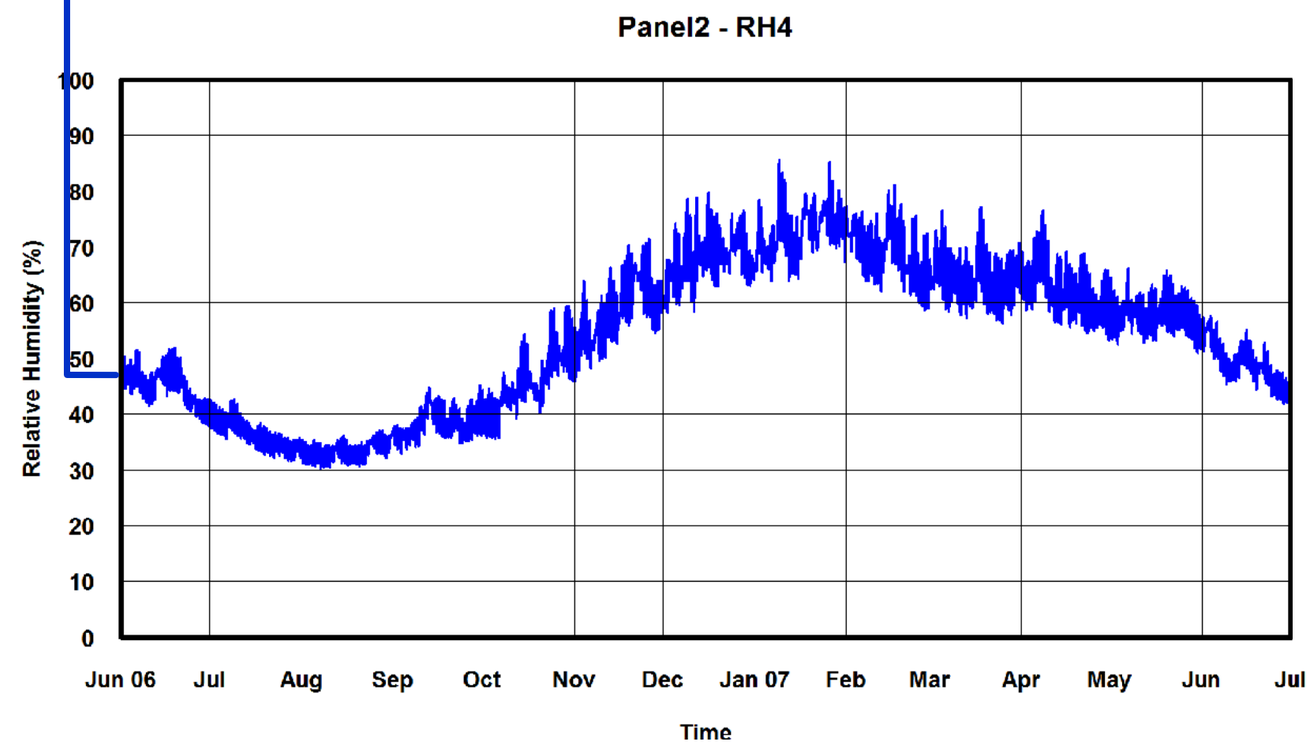
Panel2 - RH4
Relative Humidity (%)
100
90
80
70
60
50
40
30
20
10
0
Jun 06
Jul
Aug
Sep
Oct
Nov
Dec
Jan 07
Feb
Mar
Apr
May
Jun
Jul
Time

Panel 2

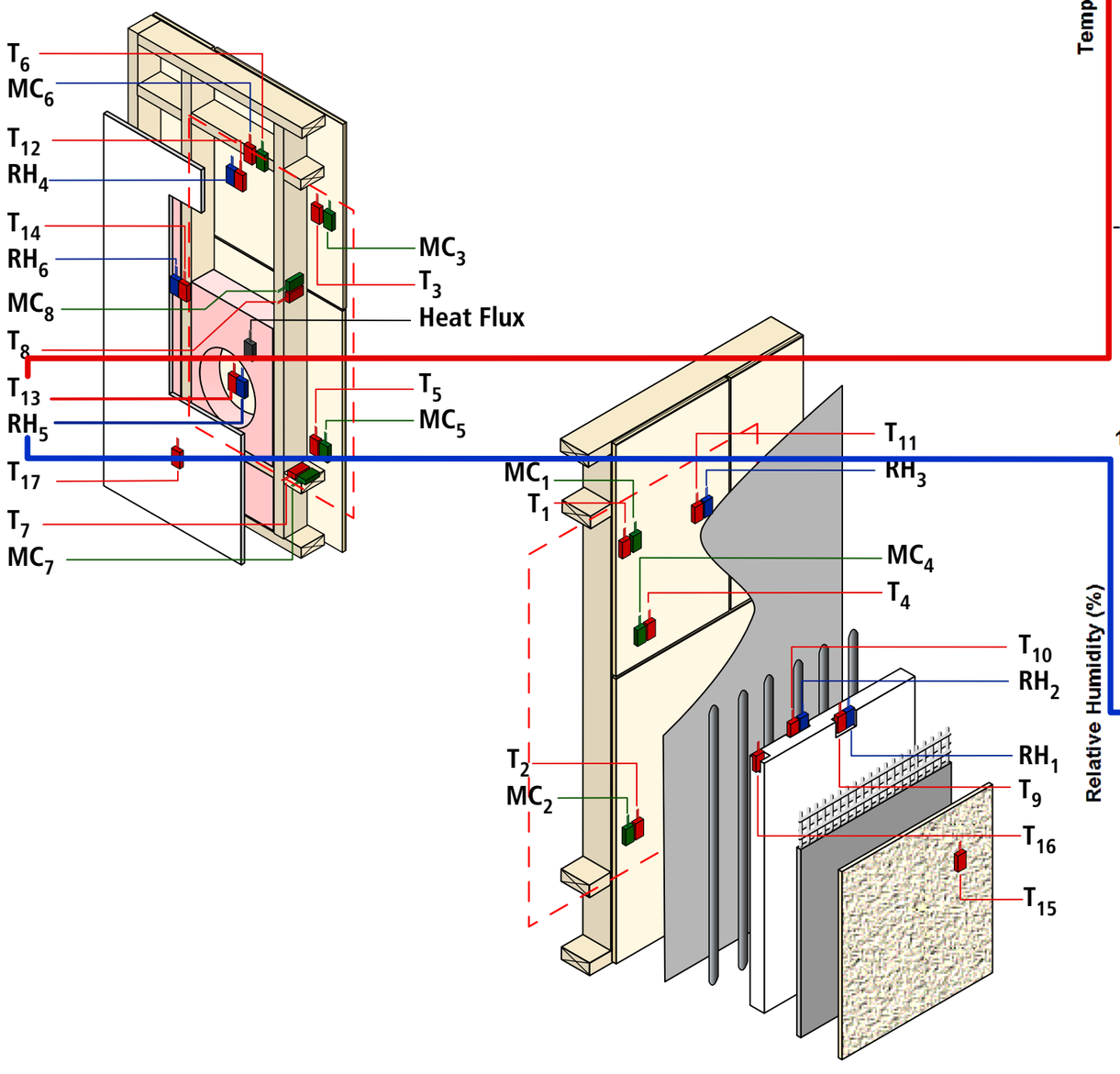
T_6
MC_6
T_{12}
RH_4
T_{14}
RH_6
MC_8
T_8
T_{13}
RH_5
T_{17}
T_7
MC_7
MC_3
T_3
Heat Flux
T_5
MC_5
MC_1
T_1
T_{11}
RH_3
MC_4
T_4
T_{10}
RH_2
RH_1
T_9
T_{16}
T_{15}
T_2
MC_2

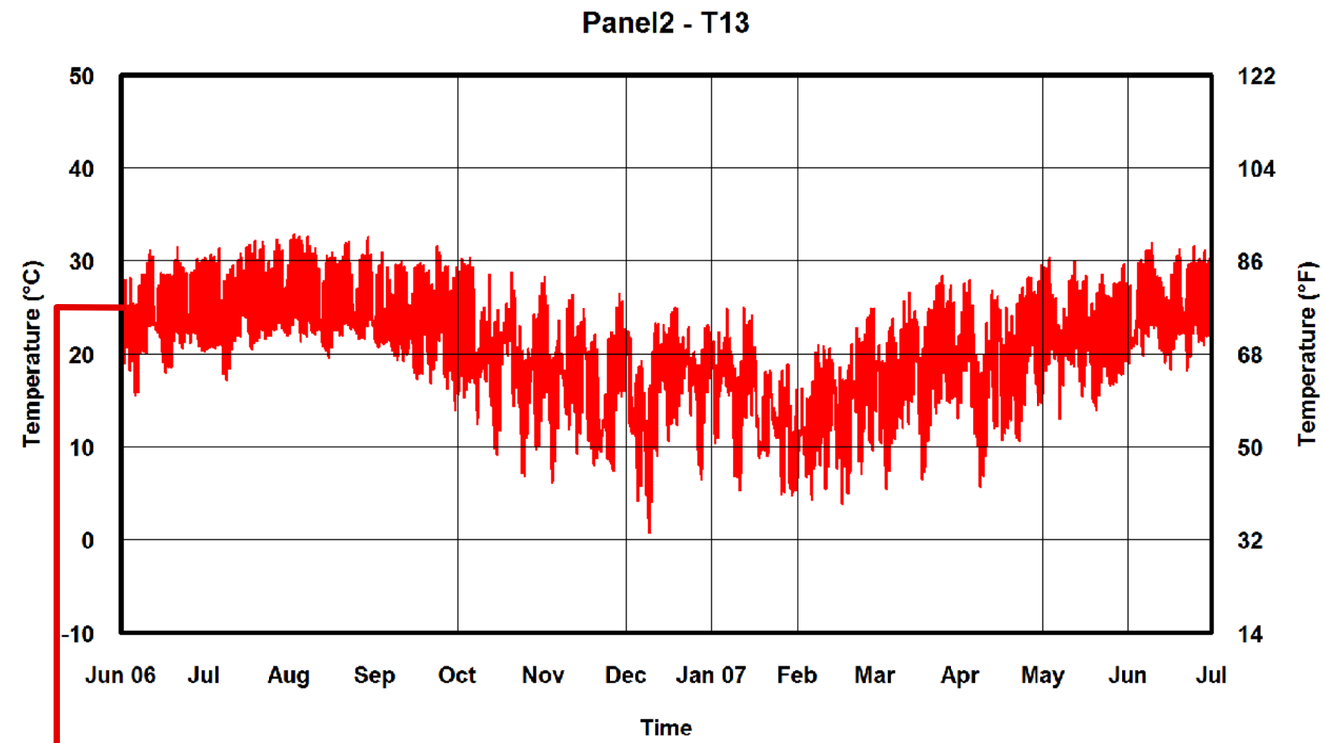
Panel2 - T13
Temperature (°C)
50
40
30
20
10
0
-10
Temperature (°F)
122
104
86
68
50
32
14
Jun 06
Jul
Aug
Sep
Oct
Nov
Dec
Jan 07
Feb
Mar
Apr
May
Jun
Jul
Time

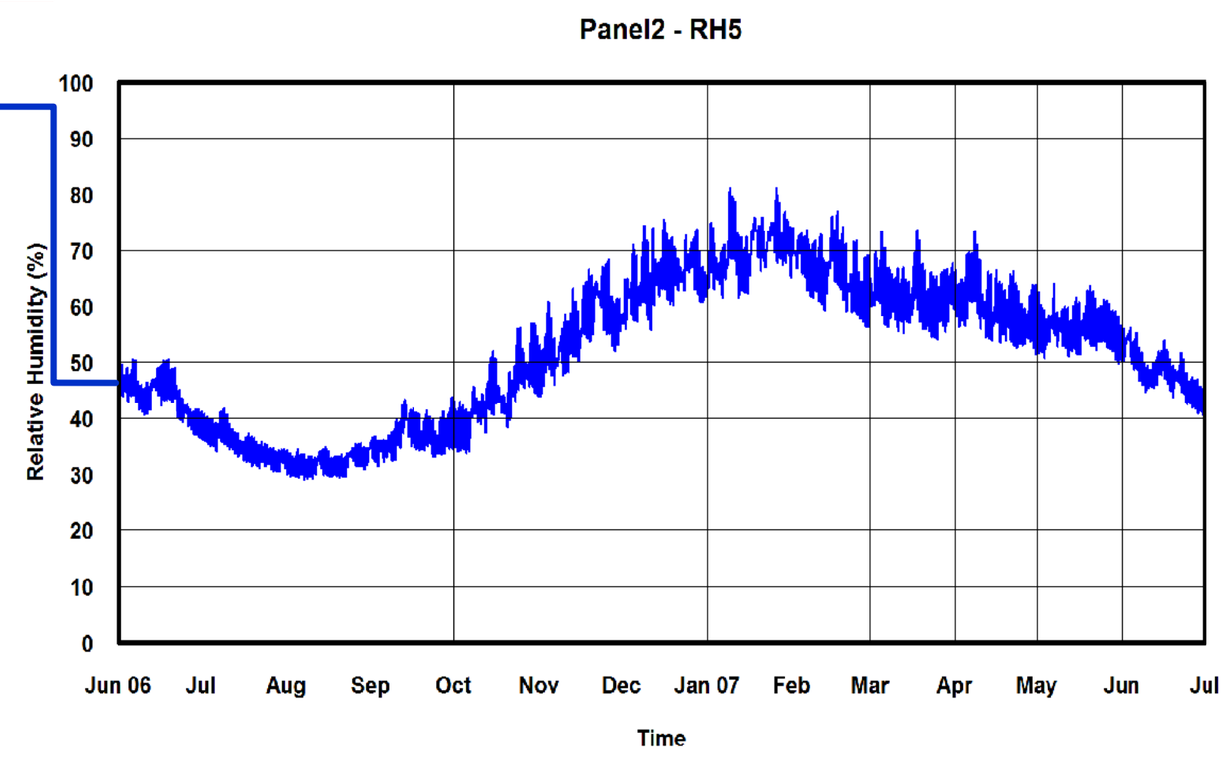
Panel2 - RH5
Relative Humidity (%)
100
90
80
70
60
50
40
30
20
10
0
Jun 06
Jul
Aug
Sep
Oct
Nov
Dec
Jan 07
Feb
Mar
Apr
May
Jun
Jul
Time

Panel 2

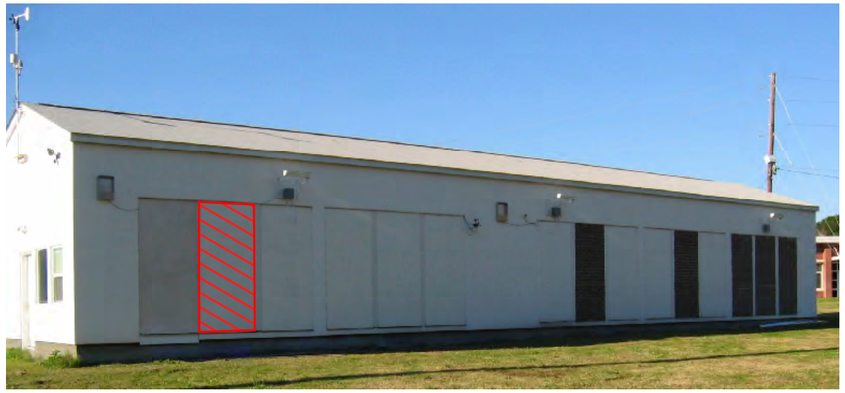

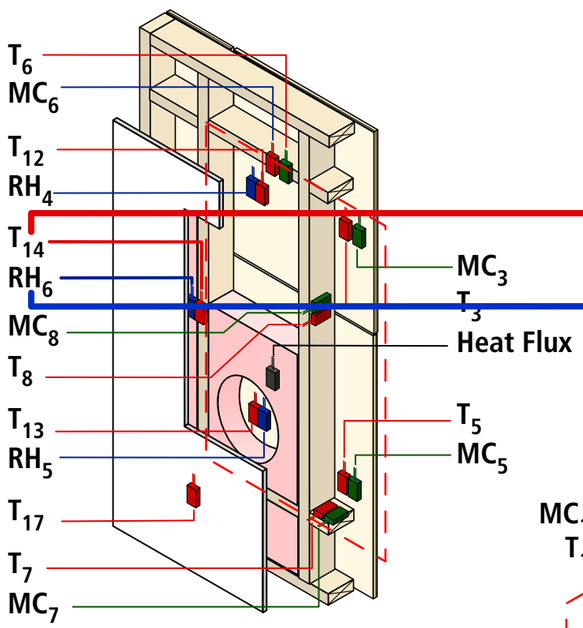
T_6
MC_6
T_{12}
RH_4
T_{14}
RH_6
MC_8
T_8
T_{13}
RH_5
T_{17}
T_7
MC_7
MC_3
T_3
Heat Flux
T_5
MC_5

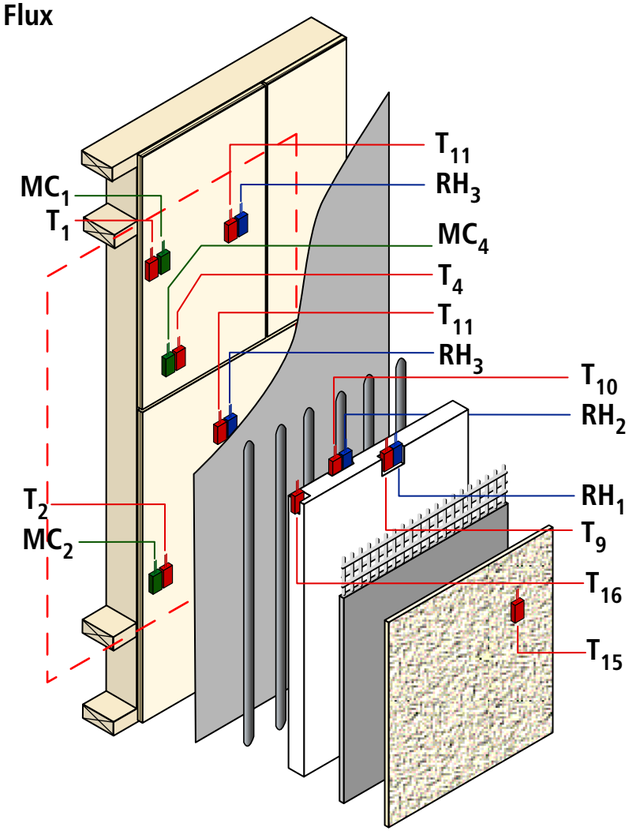
MC_1
T_1
T_2
MC_2
T_{11}
RH_3
MC_4
T_4
T_{11}
RH_3
T_{10}
RH_2
RH_1
T_9
T_{16}
T_{15}

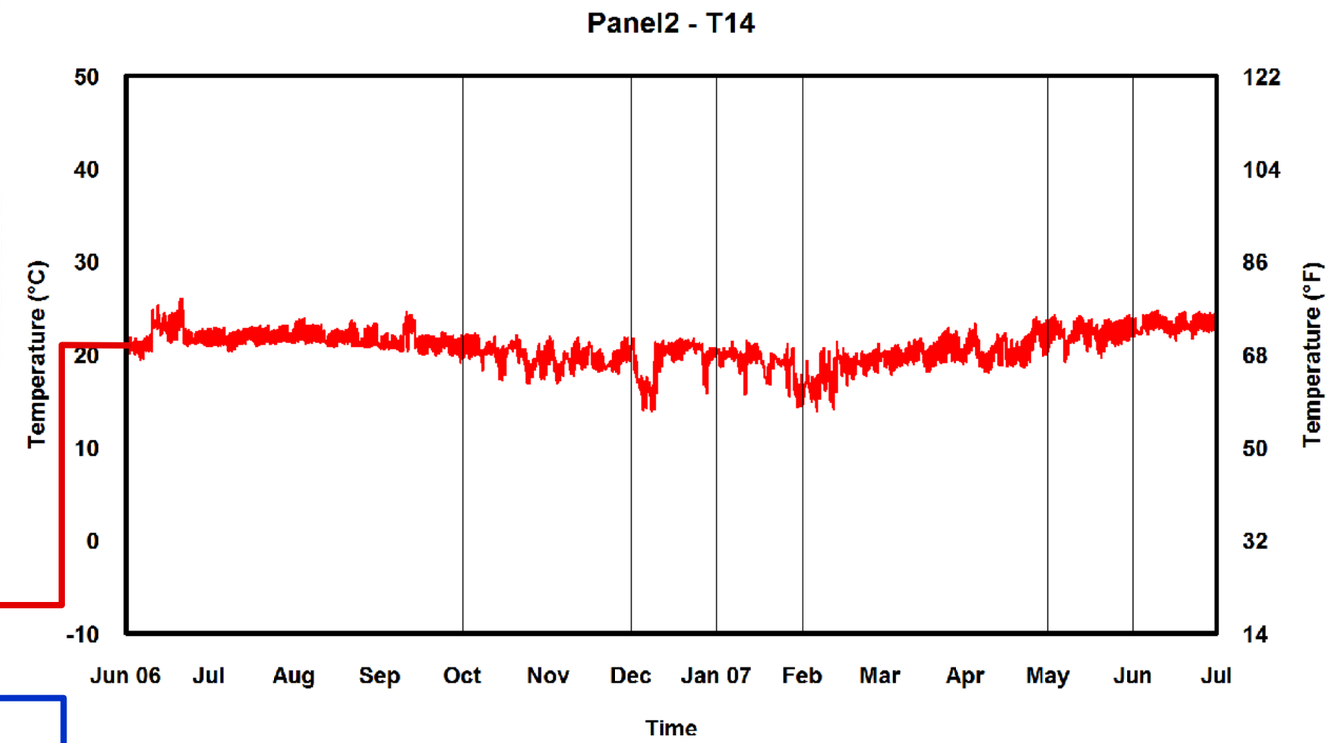
Panel2 - T14
Temperature (°C)
50
40
30
20
10
0
-10
Temperature (°F)
122
104
86
68
50
32
14
Jun 06
Jul
Aug
Sep
Oct
Nov
Dec
Jan 07
Feb
Mar
Apr
May
Jun
Jul
Time

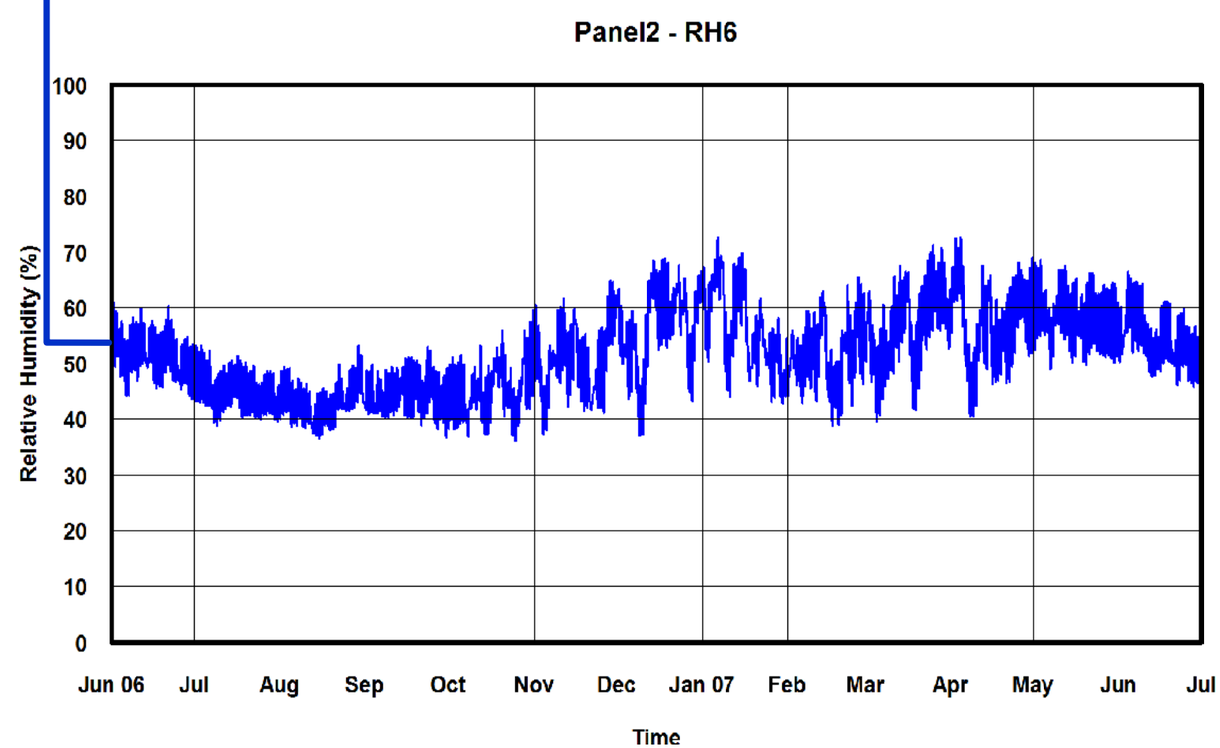
Panel2 - RH6
Relative Humidity (%)
100
90
80
70
60
50
40
30
20
10
0
Jun 06
Jul
Aug
Sep
Oct
Nov
Dec
Jan 07
Feb
Mar
Apr
May
Jun
Jul
Time

Panel 2

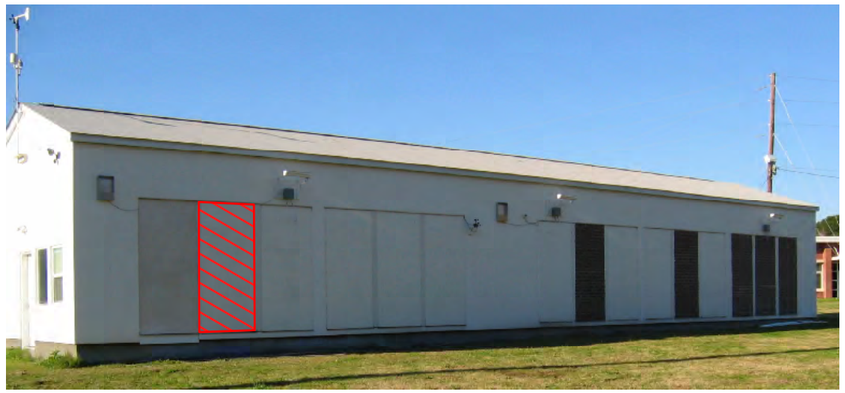

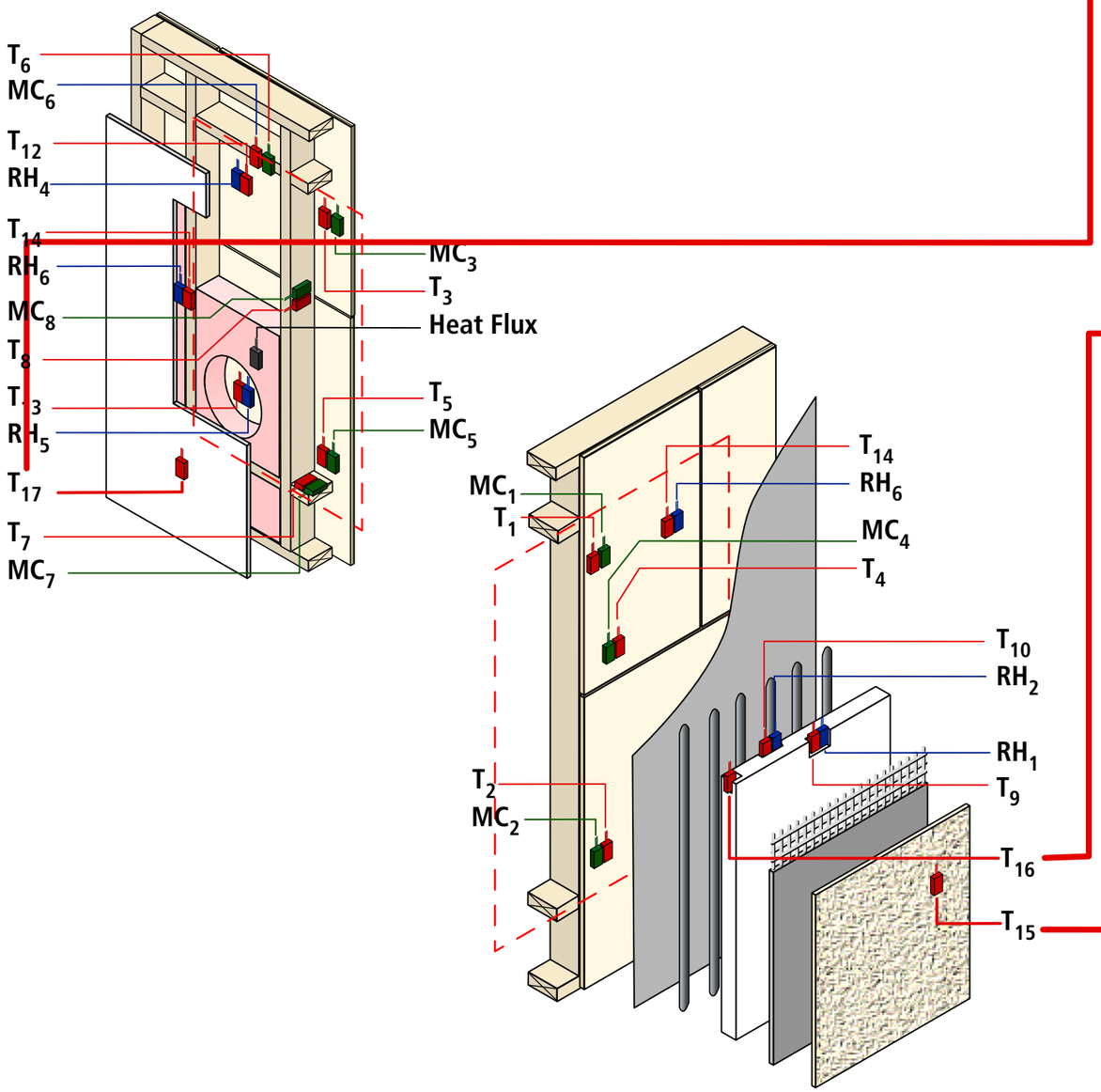
T_6
MC_6
T_{12}
RH_4
T_{14}
RH_6
MC_8
T_8
T_3
RH_5
T_{17}
T_7
MC_7
MC_3
T_3
Heat Flux
T_5
MC_5
MC_1
T_1
T_{14}
RH_6
MC_4
T_4
T_{10}
RH_2
RH_1
T_9
T_2
MC_2
T_{16}
T_{15}

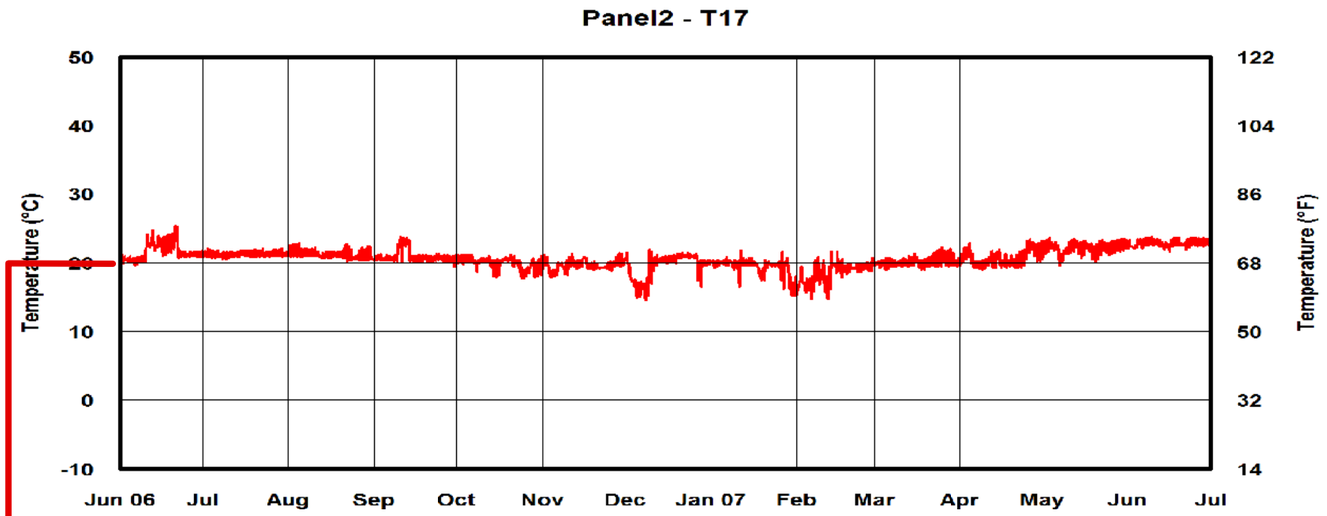
Panel2 - T17
Temperature (°C)
Temperature (°F)
50
40
30
20
10
0
-10
122
104
86
68
50
32
14
Jun 06
Jul
Aug
Sep
Oct
Nov
Dec
Jan 07
Feb
Mar
Apr
May
Jun
Jul

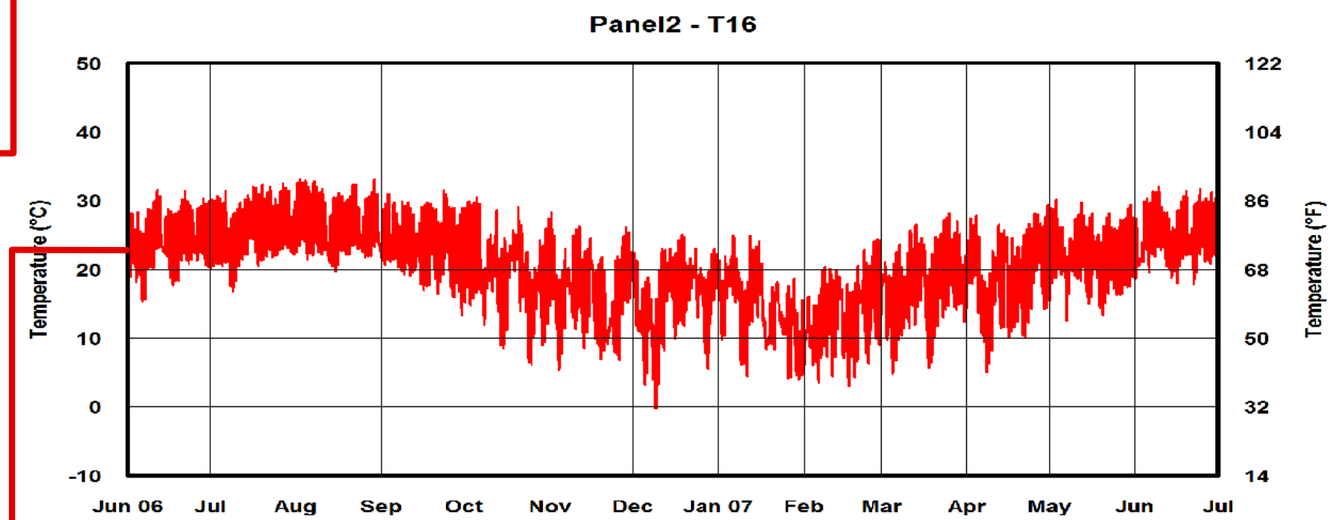
Panel2 - T16
Temperature (°C)
Temperature (°F)
50
40
30
20
10
0
-10
122
104
86
68
50
32
14
Jun 06
Jul
Aug
Sep
Oct
Nov
Dec
Jan 07
Feb
Mar
Apr
May
Jun
Jul

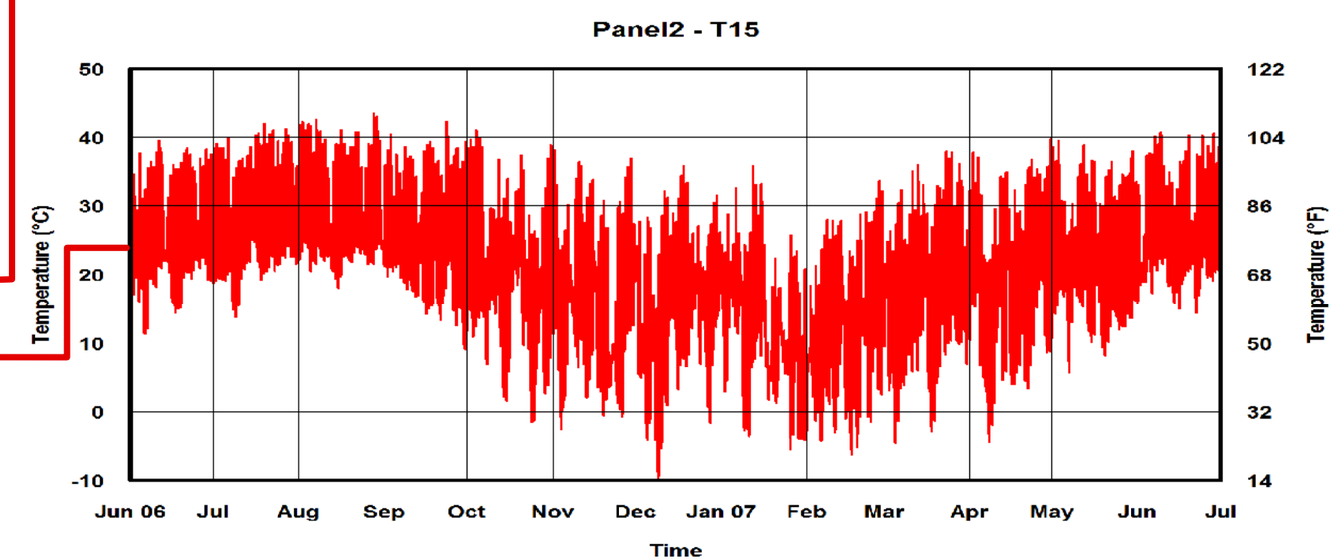
Panel2 - T15
Temperature (°C)
Temperature (°F)
50
40
30
20
10
0
-10
122
104
86
68
50
32
14
Jun 06
Jul
Aug
Sep
Oct
Nov
Dec
Jan 07
Feb
Mar
Apr
May
Jun
Jul
Time

Panel 3

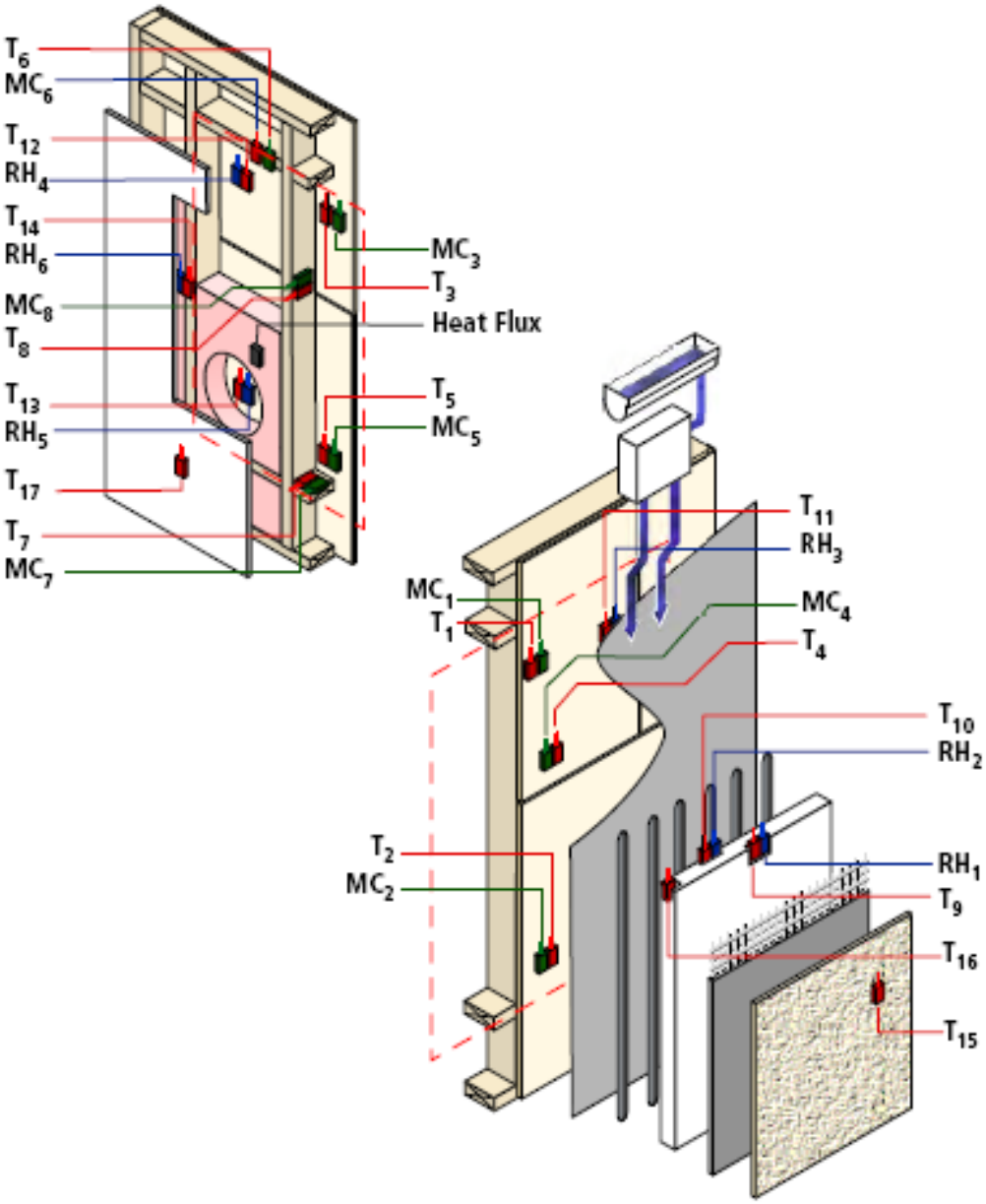
T_6
MC_6
T_{12}
RH_4
T_{14}
RH_6
MC_8
T_8
T_{13}
RH_5
T_{17}
T_7
MC_7
MC_3
T_3
Heat Flux
T_5
MC_5
T_{11}
RH_3
MC_1
T_1
MC_4
T_4
T_{10}
RH_2
T_2
MC_2
RH_1
T_9
T_{16}
T_{15}

Panel 3

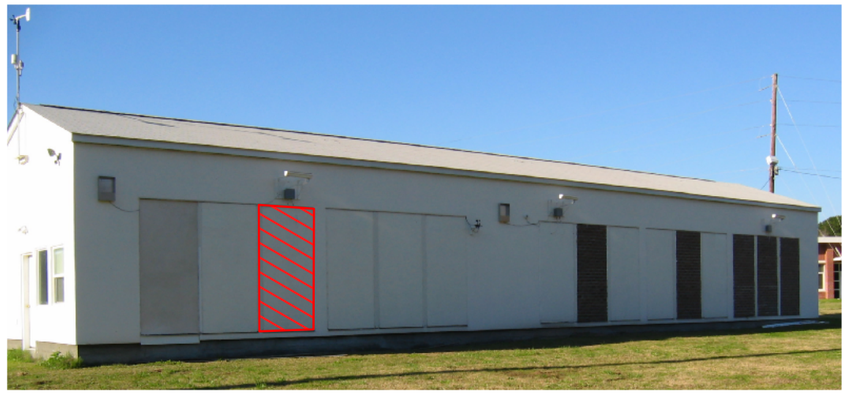

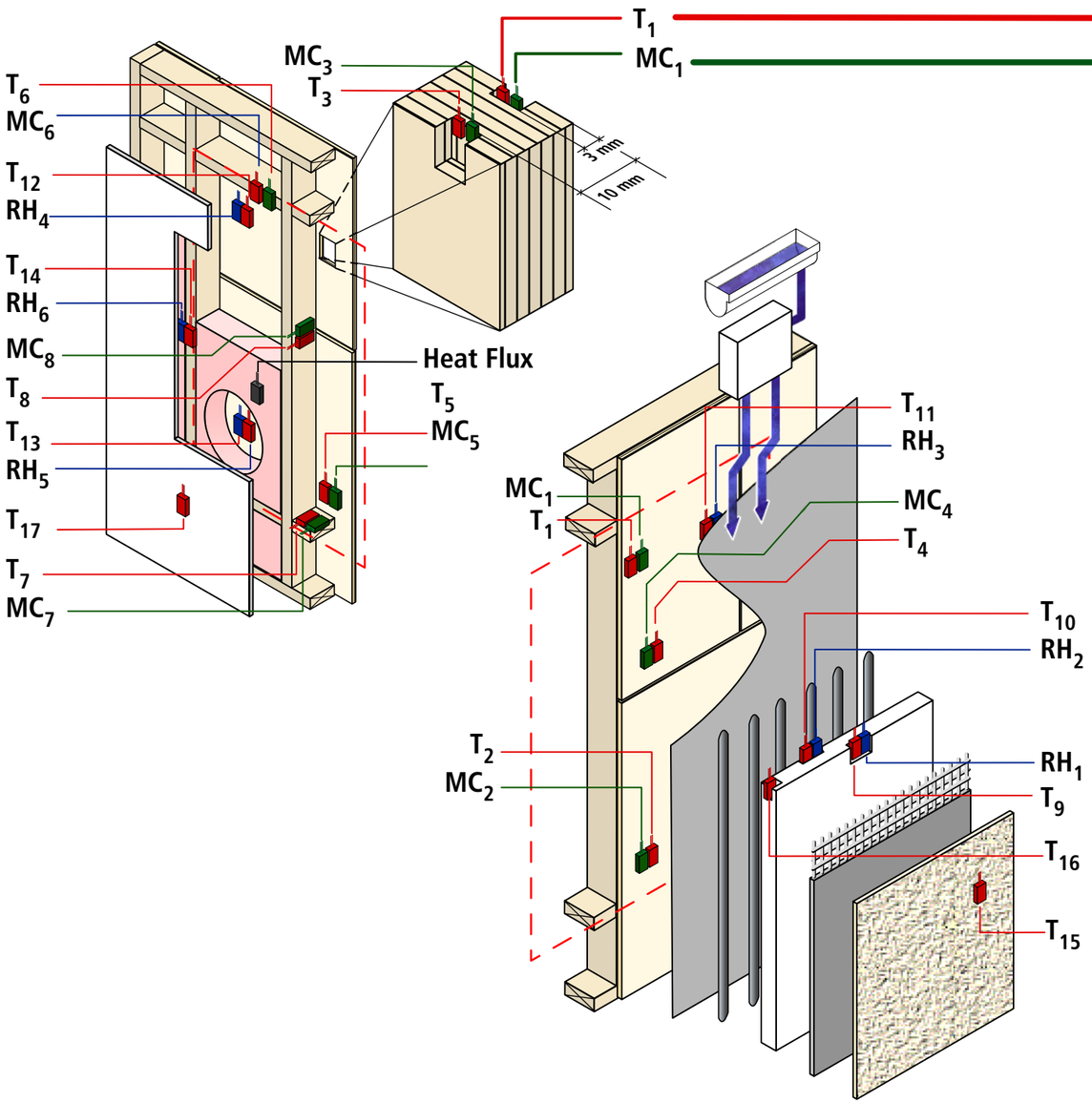
T_1
MC_1
MC_3
T_3
T_6
MC_6
T_{12}
RH_4
T_{14}
RH_6
MC_8
T_8
T_{13}
RH_5
T_{17}
T_7
MC_7
3 mm
10 mm
Heat Flux
T_5
MC_5
T_{11}
RH_3
MC_4
T_4
MC_1
T_1
T_{10}
RH_2
T_2
MC_2
RH_1
T_9
T_{16}
T_{15}

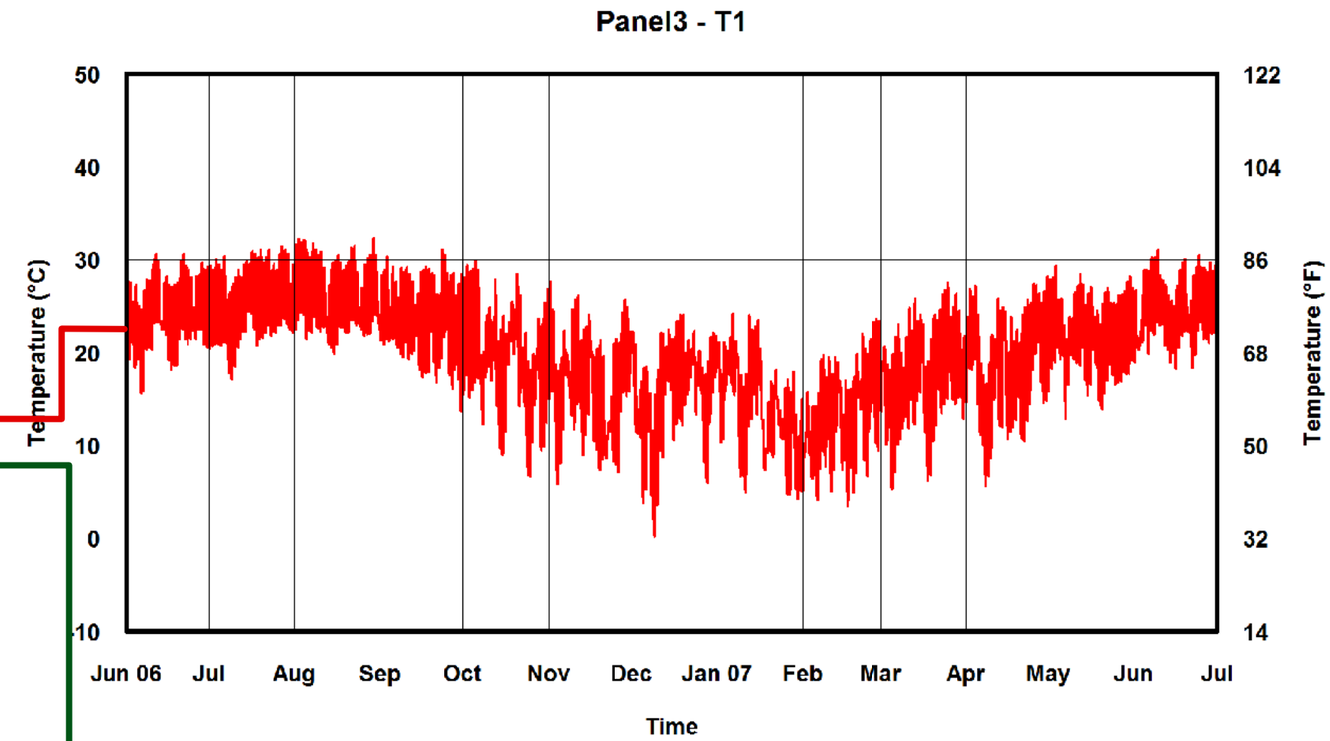
Panel3 - T1
Temperature (°C)
Temperature (°F)
50
40
30
20
10
0
-10
122
104
86
68
50
32
14
Jun 06
Jul
Aug
Sep
Oct
Nov
Dec
Jan 07
Feb
Mar
Apr
May
Jun
Jul
Time

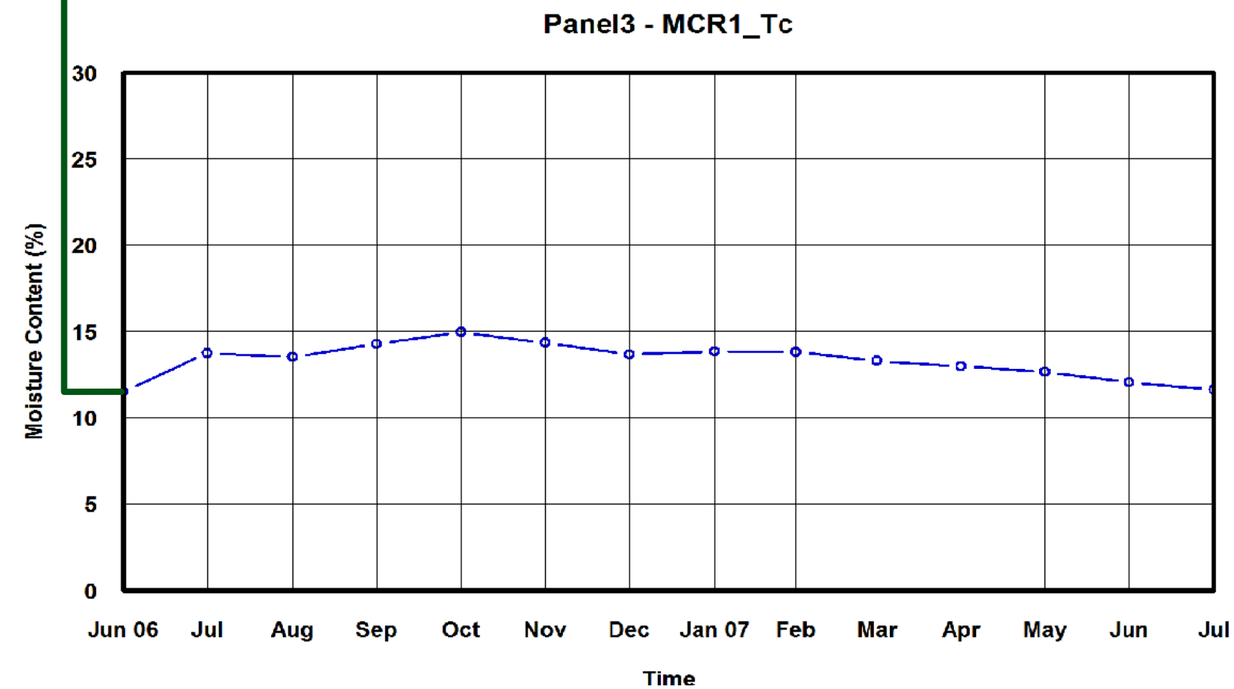
Panel3 - MCR1_Tc
Moisture Content (%)
30
25
20
15
10
5
0
Jun 06
Jul
Aug
Sep
Oct
Nov
Dec
Jan 07
Feb
Mar
Apr
May
Jun
Jul
Time

Panel 3

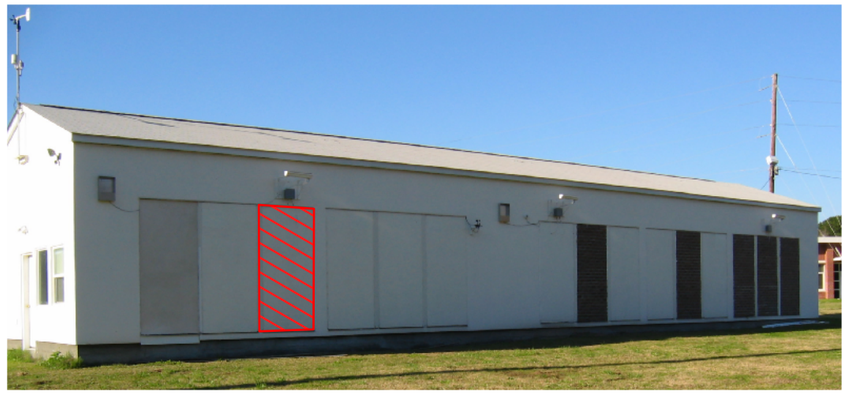

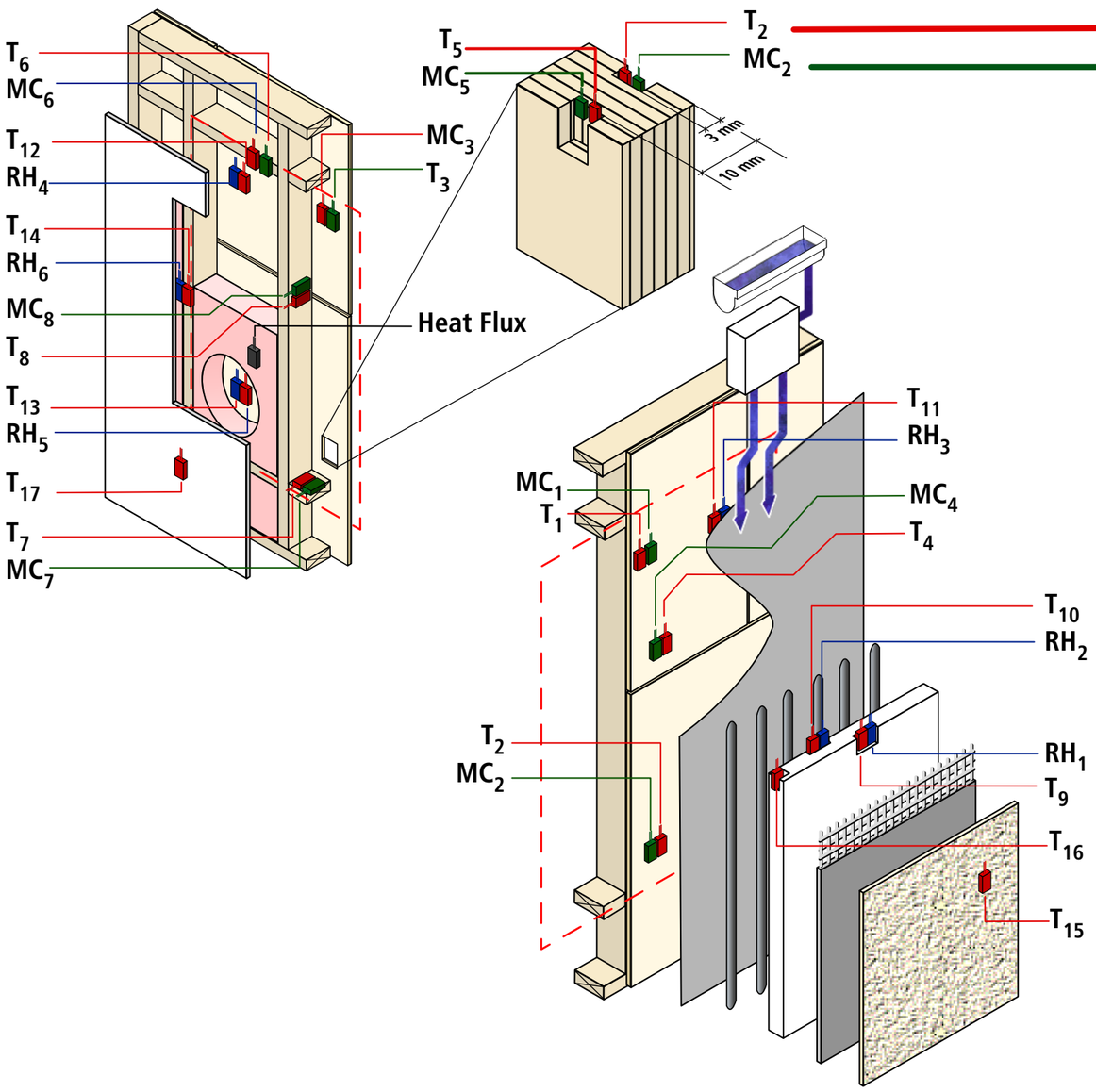
T_6
MC_6
T_{12}
RH_4
T_{14}
RH_6
MC_8
T_8
T_{13}
RH_5
T_{17}
T_7
MC_7
T_5
MC_5
T_2
MC_2
MC_3
T_3
3 mm
10 mm
Heat Flux
T_{11}
RH_3
MC_1
T_1
MC_4
T_4
T_{10}
RH_2
T_2
MC_2
RH_1
T_9
T_{16}
T_{15}

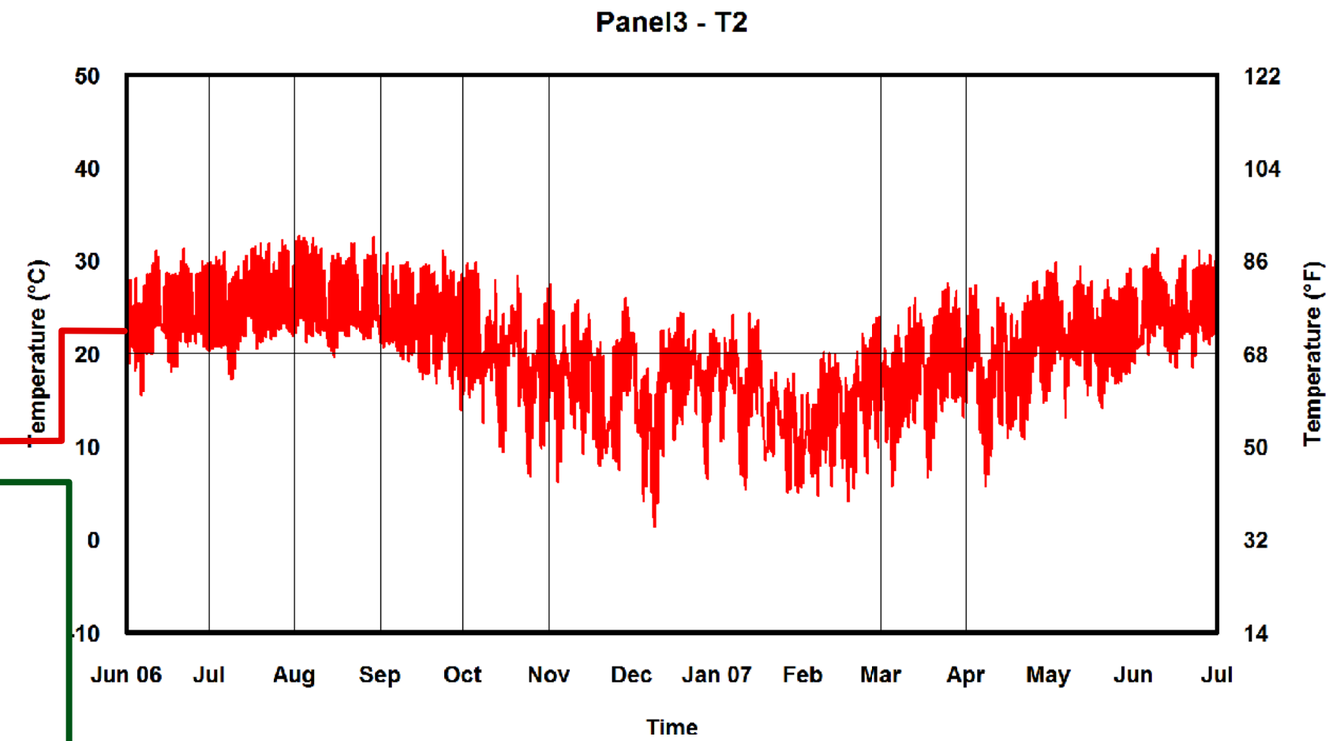
Panel3 - T2
Temperature (°C)
Temperature (°F)
50
40
30
20
10
0
-10
122
104
86
68
50
32
14
Jun 06
Jul
Aug
Sep
Oct
Nov
Dec
Jan 07
Feb
Mar
Apr
May
Jun
Jul
Time

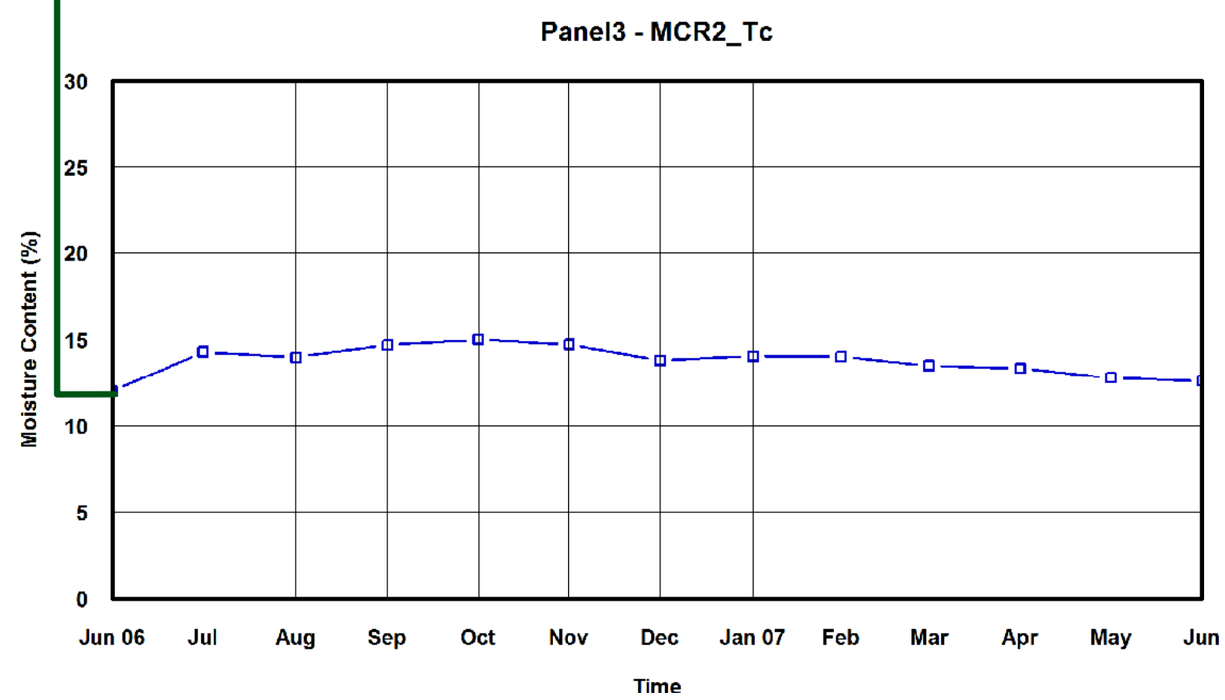
Panel3 - MCR2_Tc
Moisture Content (%)
30
25
20
15
10
5
0
Jun 06
Jul
Aug
Sep
Oct
Nov
Dec
Jan 07
Feb
Mar
Apr
May
Jun
Time

Panel 3

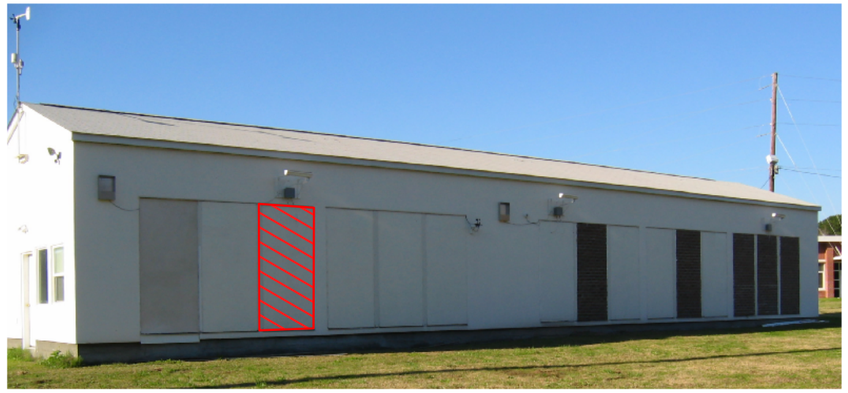

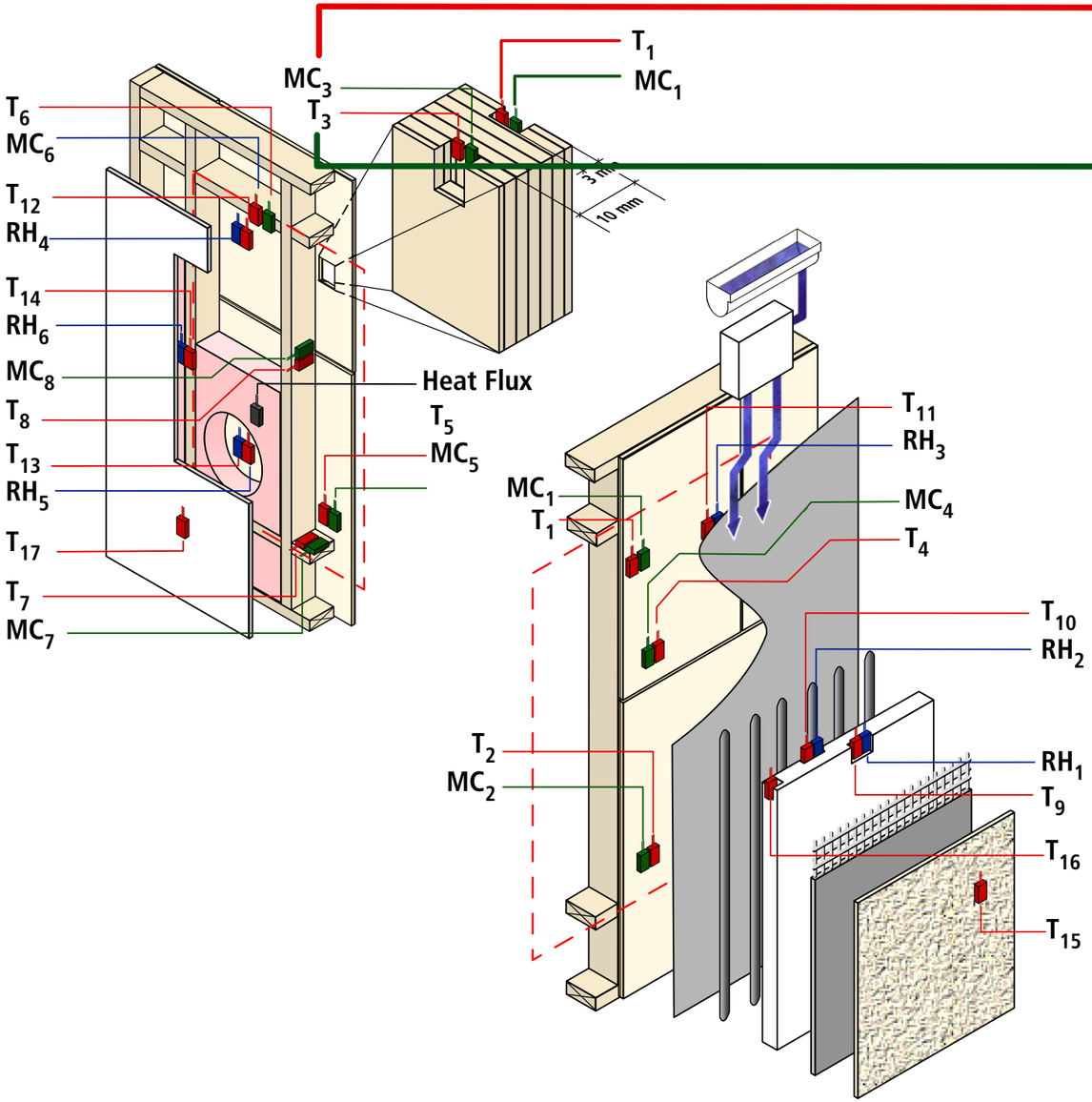
T_6
MC_6
T_{12}
RH_4
T_{14}
RH_6
MC_8
T_8
T_{13}
RH_5
T_{17}
T_7
MC_7
MC_3
T_3
T_1
MC_1
3 mm
10 mm
Heat Flux
T_5
MC_5
MC_1
T_1
T_{11}
RH_3
MC_4
T_4
T_{10}
RH_2
T_2
MC_2
RH_1
T_9
T_{16}
T_{15}

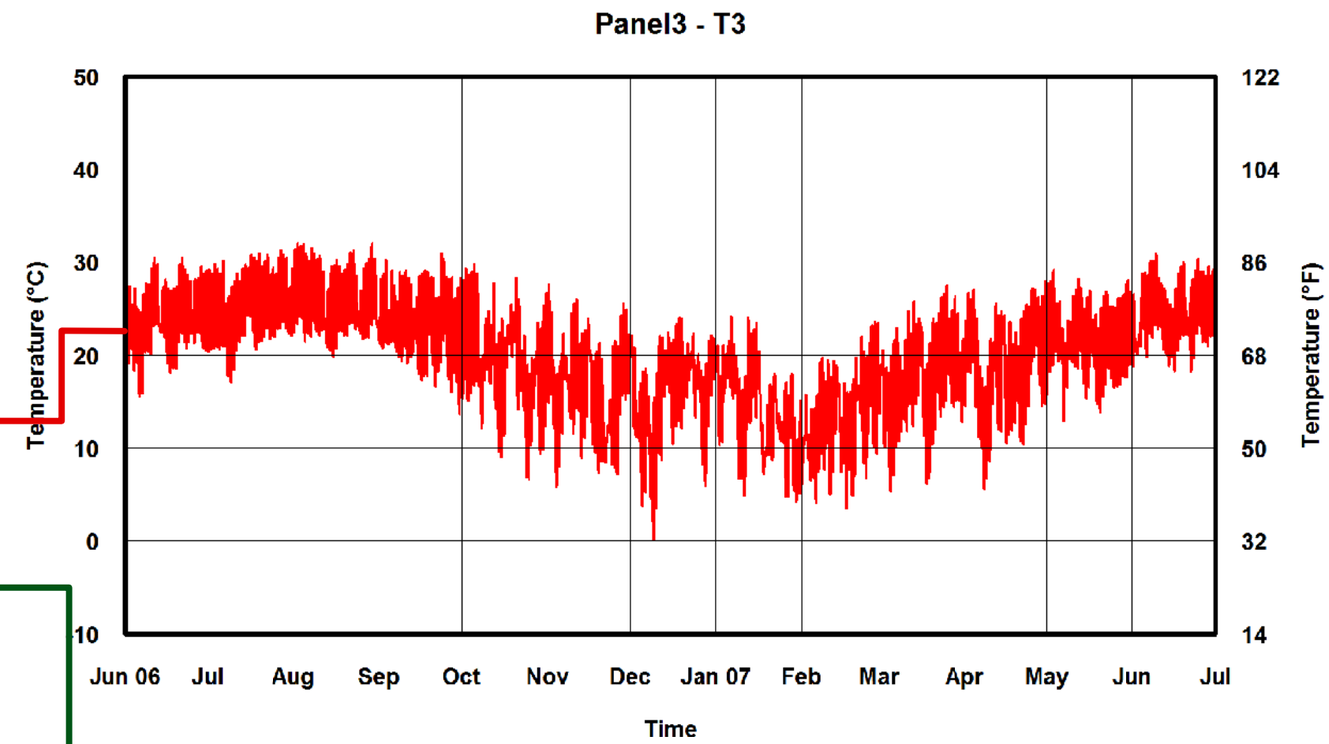
Panel3 - T3
Temperature (°C)
Temperature (°F)
50
40
30
20
10
0
-10
122
104
86
68
50
32
14
Jun 06
Jul
Aug
Sep
Oct
Nov
Dec
Jan 07
Feb
Mar
Apr
May
Jun
Jul
Time

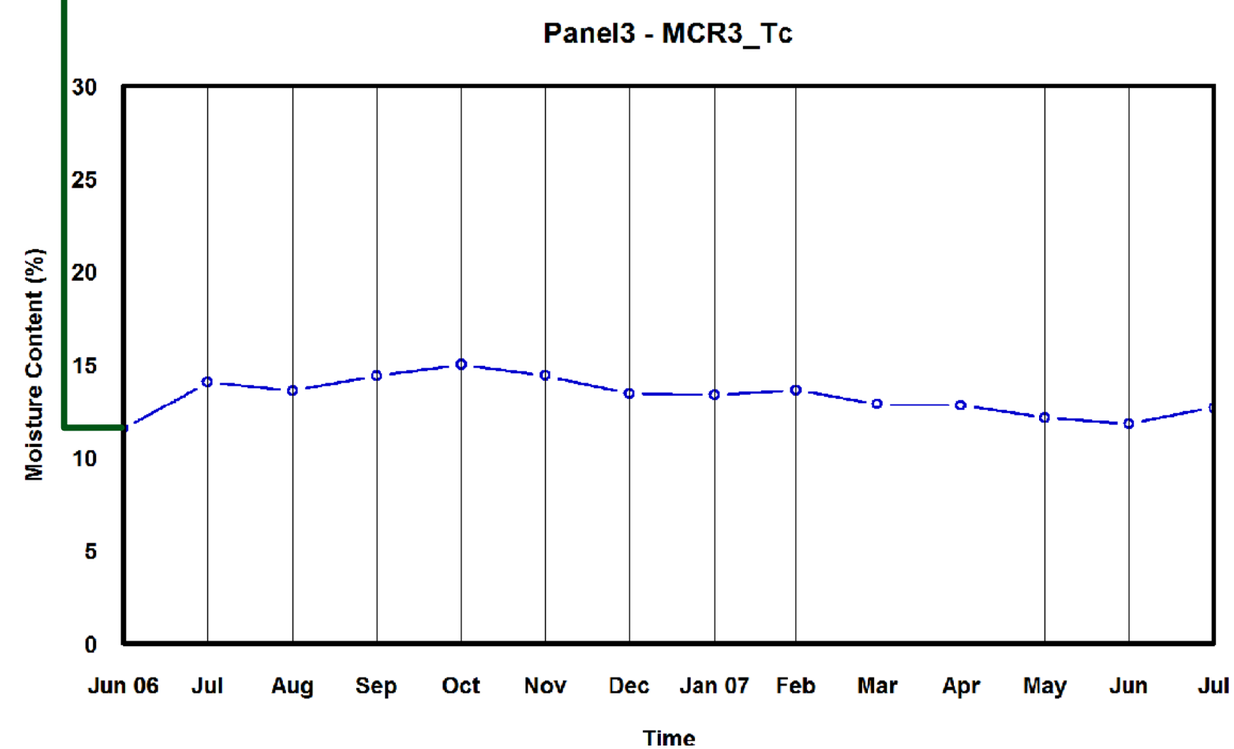
Panel3 - MCR3_Tc
Moisture Content (%)
30
25
20
15
10
5
0
Jun 06
Jul
Aug
Sep
Oct
Nov
Dec
Jan 07
Feb
Mar
Apr
May
Jun
Jul
Time

Panel 3

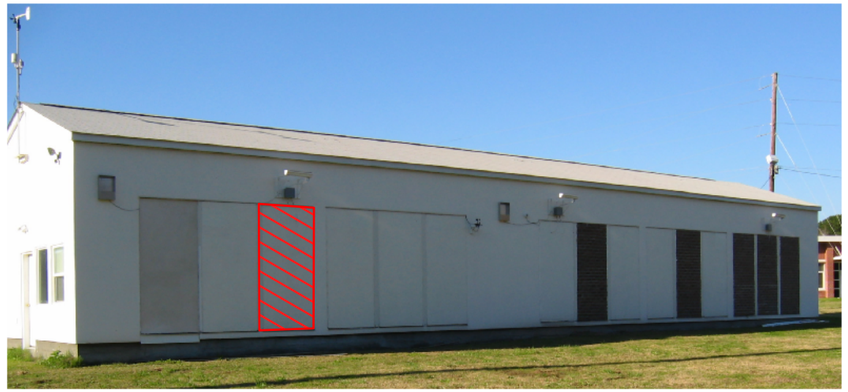

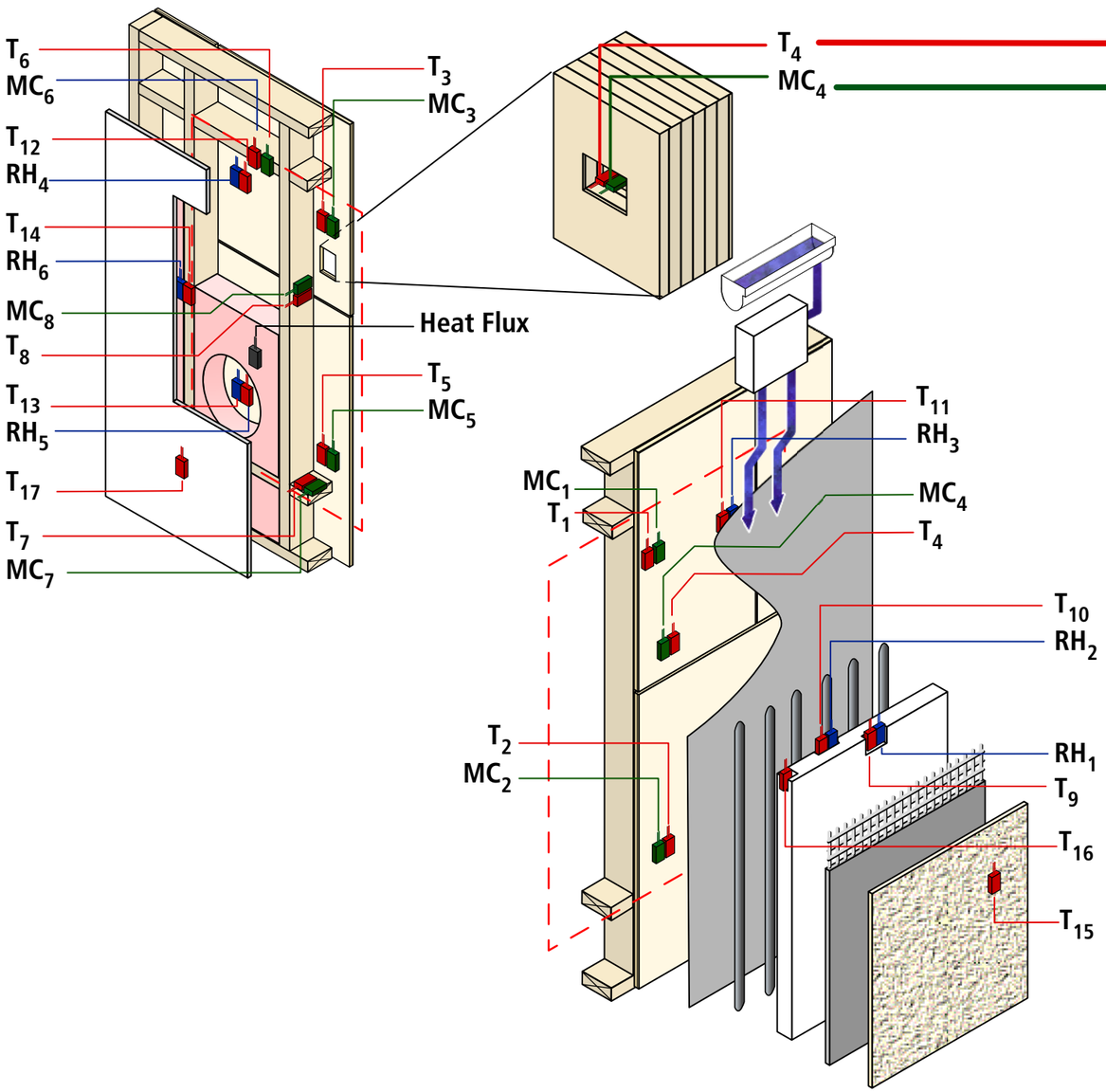
T_6
MC_6
T_{12}
RH_4
T_{14}
RH_6
MC_8
T_8
T_{13}
RH_5
T_{17}
T_7
MC_7
T_3
MC_3
Heat Flux
T_5
MC_5
T_4
MC_4
T_{11}
RH_3
MC_1
T_1
MC_4
T_4
T_{10}
RH_2
T_2
MC_2
RH_1
T_9
T_{16}
T_{15}

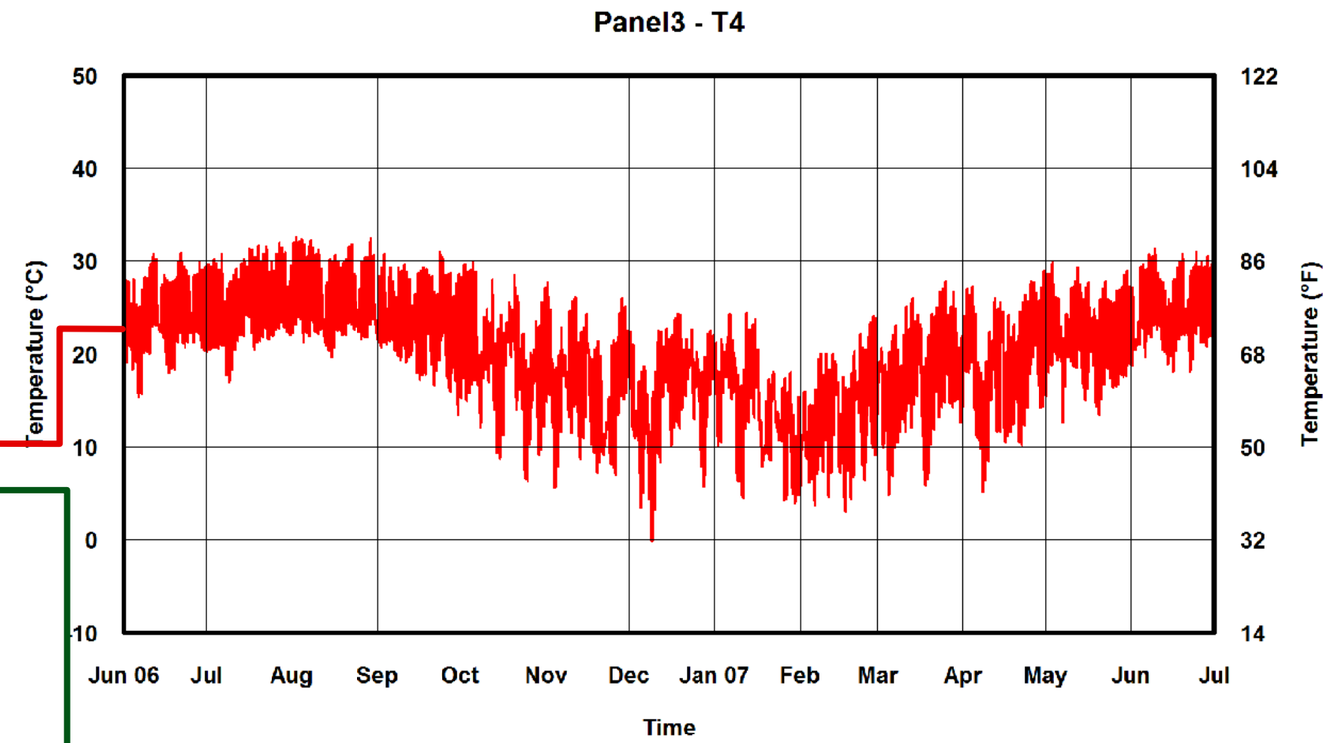
Panel3 - T4
Temperature (°C)
Temperature (°F)
50
40
30
20
10
0
-10
122
104
86
68
50
32
14
Jun 06
Jul
Aug
Sep
Oct
Nov
Dec
Jan 07
Feb
Mar
Apr
May
Jun
Jul
Time

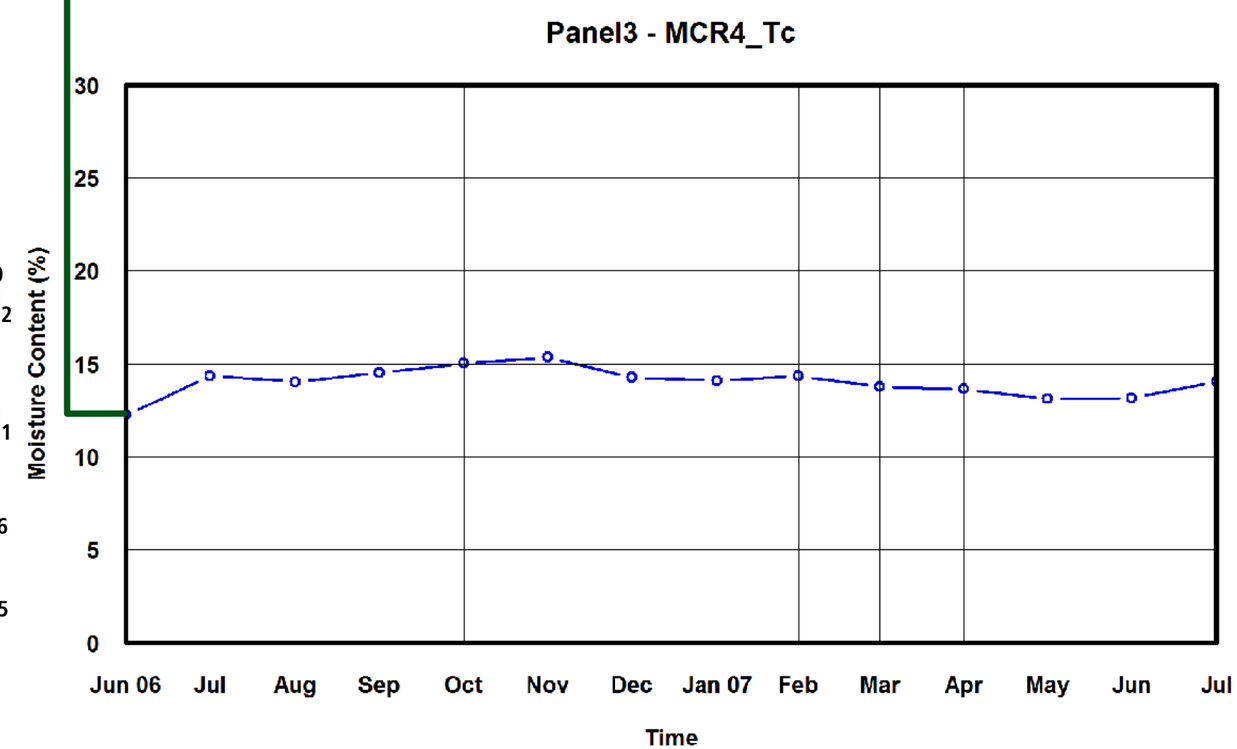
Panel3 - MCR4_Tc
Moisture Content (%)
30
25
20
15
10
5
0
Jun 06
Jul
Aug
Sep
Oct
Nov
Dec
Jan 07
Feb
Mar
Apr
May
Jun
Jul
Time

Panel 3

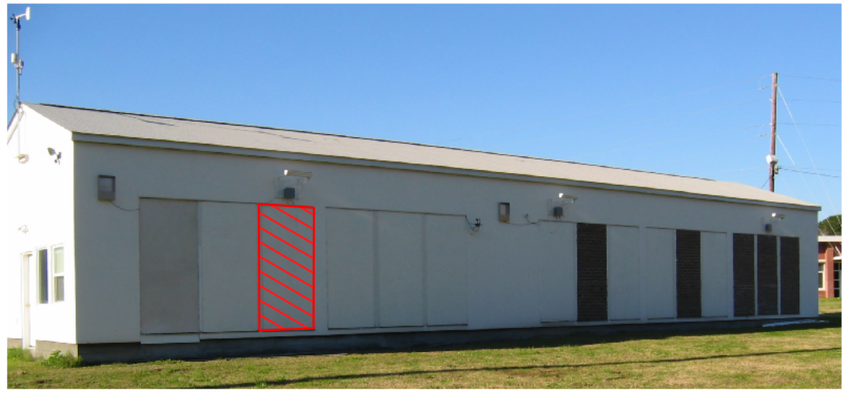

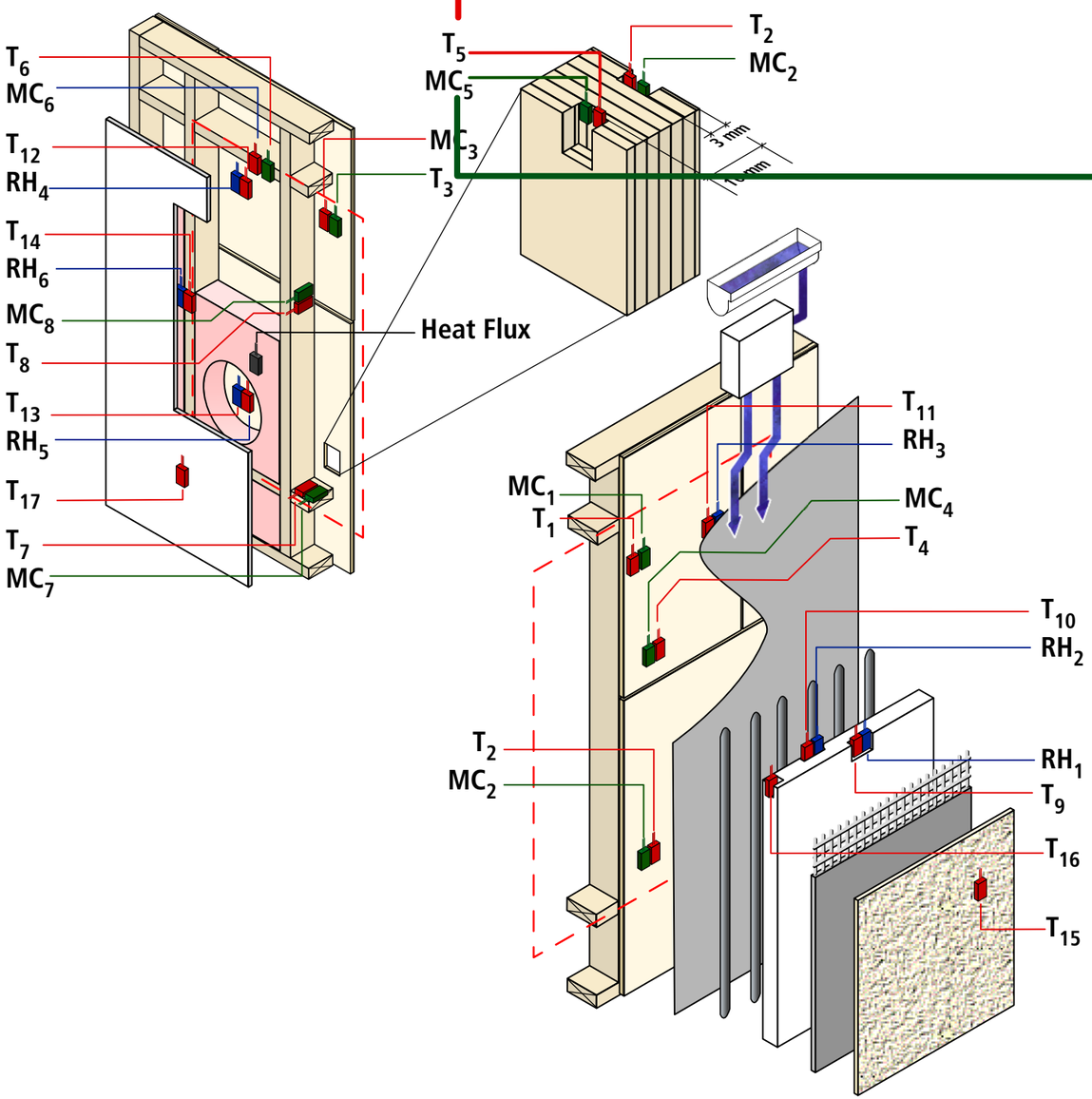
T_6
MC_6
T_{12}
RH_4
T_{14}
RH_6
MC_8
T_8
T_{13}
RH_5
T_{17}
T_7
MC_7
T_5
MC_5
MC_3
T_3
T_2
MC_2
3 mm
76mm
Heat Flux
T_{11}
RH_3
MC_1
T_1
MC_4
T_4
T_{10}
RH_2
T_2
MC_2
RH_1
T_9
T_{16}
T_{15}

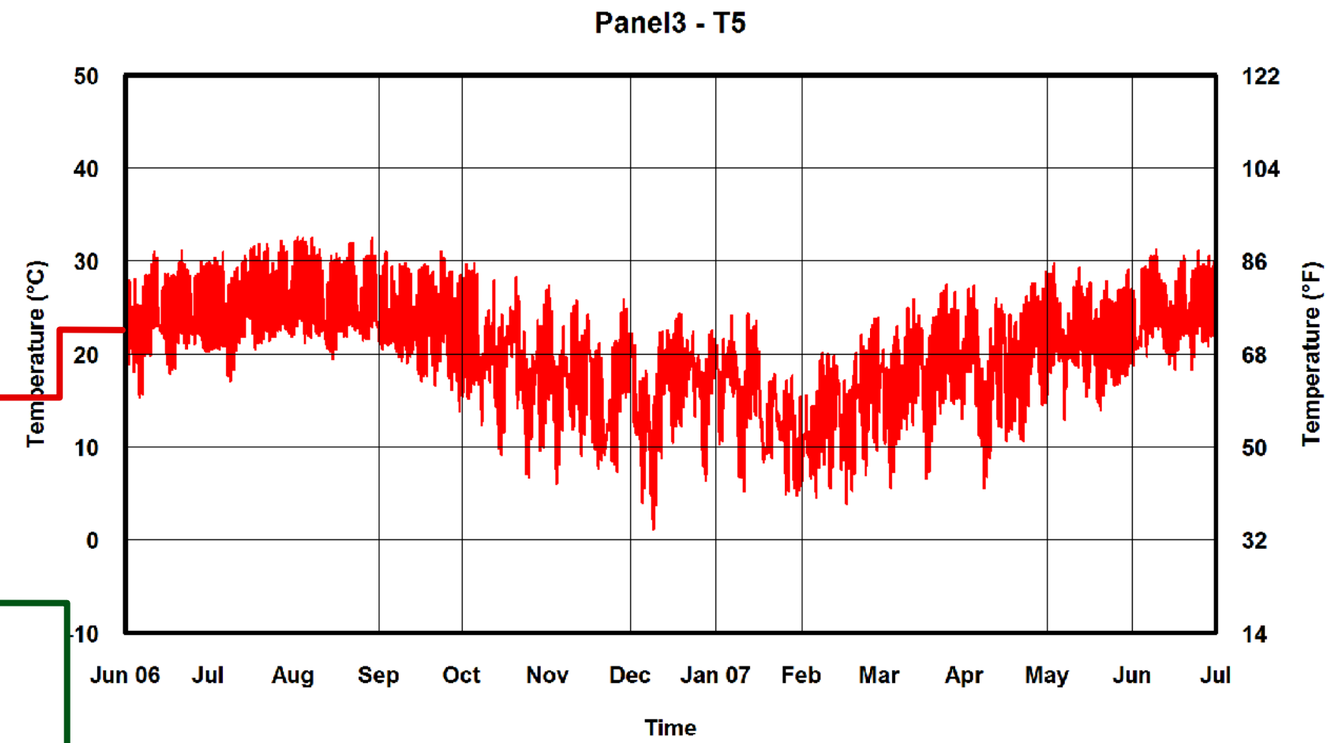
Panel3 - T5
Temperature (°C)
Temperature (°F)
50
40
30
20
10
0
-10
122
104
86
68
50
32
14
Jun 06
Jul
Aug
Sep
Oct
Nov
Dec
Jan 07
Feb
Mar
Apr
May
Jun
Jul
Time

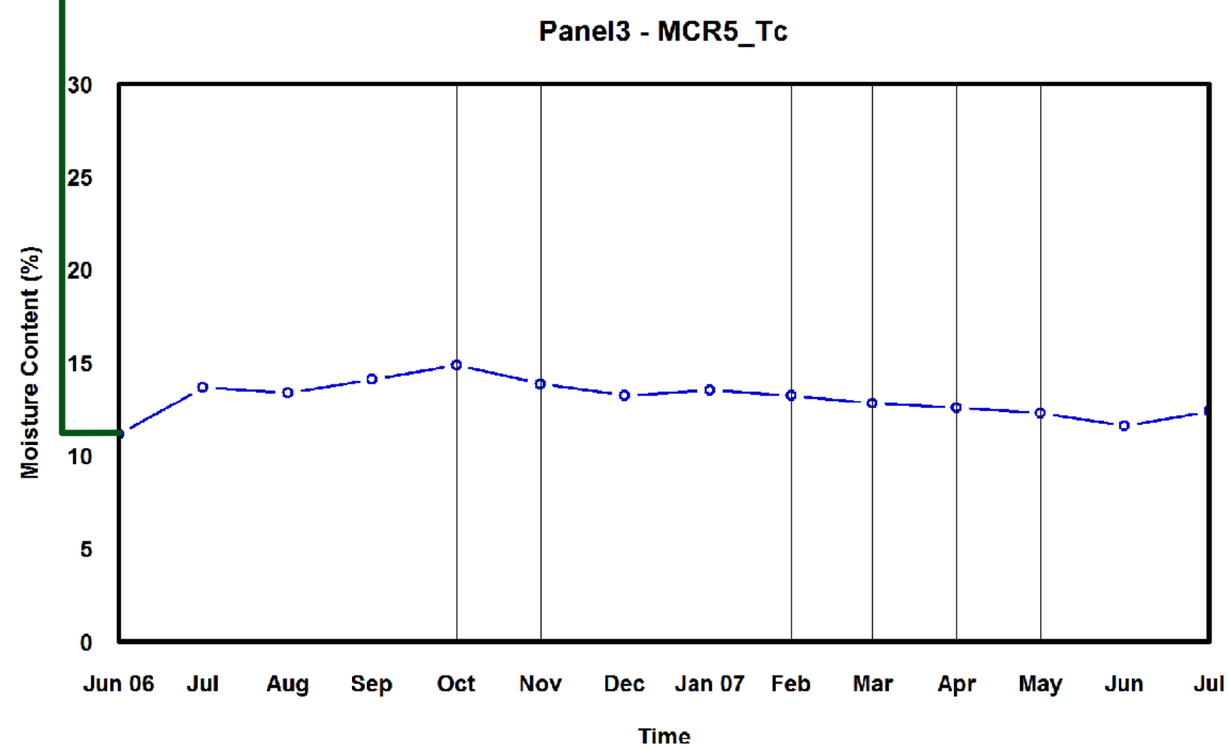
Panel3 - MCR5_Tc
Moisture Content (%)
30
25
20
15
10
5
0
Jun 06
Jul
Aug
Sep
Oct
Nov
Dec
Jan 07
Feb
Mar
Apr
May
Jun
Jul
Time

Panel 3

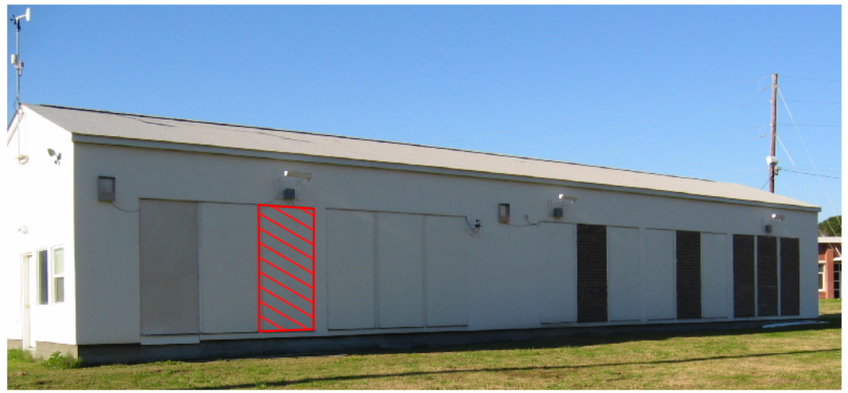

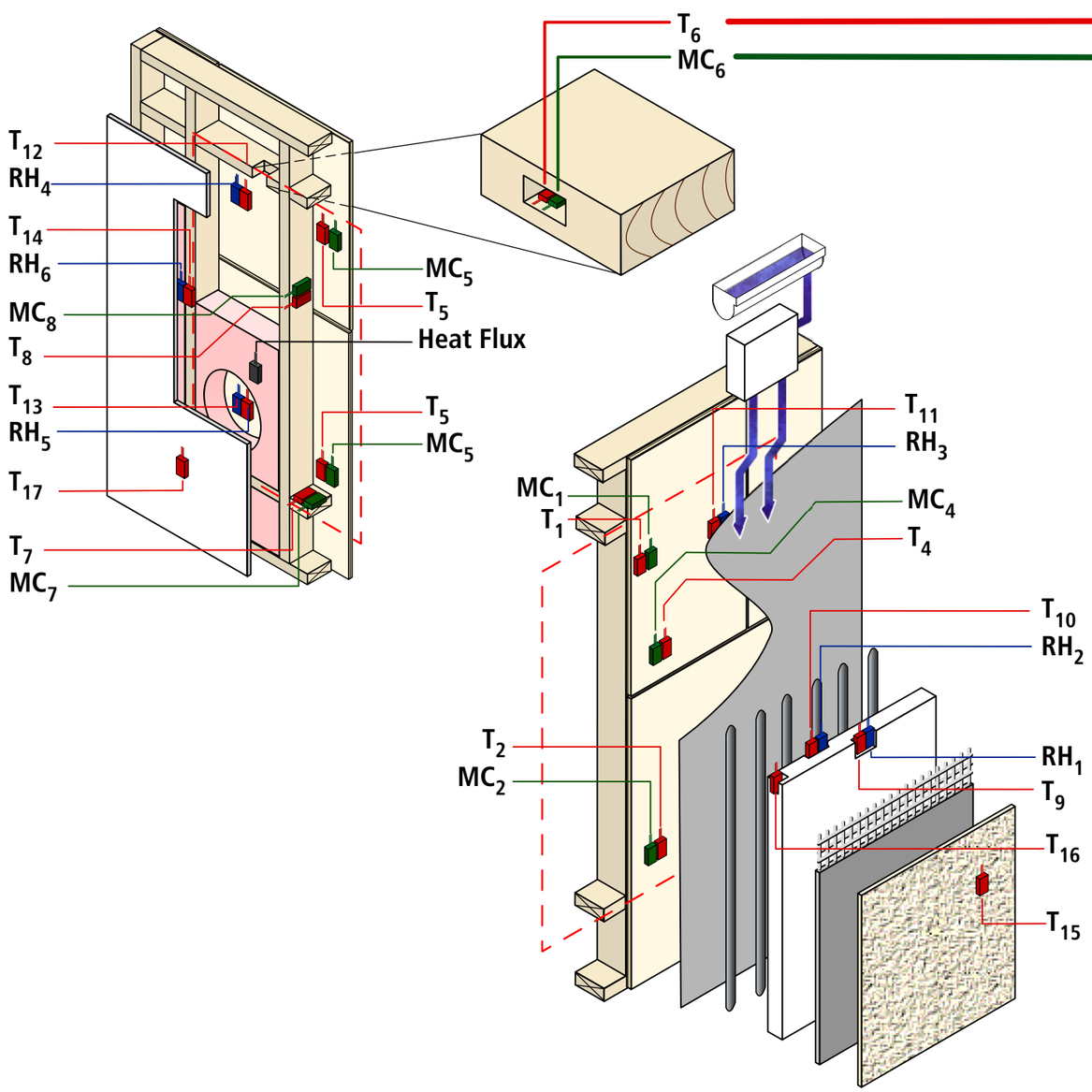
T_6
MC_6
T_{12}
RH_4
T_{14}
RH_6
MC_8
T_8
T_{13}
RH_5
T_{17}
T_7
MC_7
MC_5
T_5
Heat Flux
T_5
MC_5
T_{11}
RH_3
MC_1
T_1
MC_4
T_4
T_{10}
RH_2
T_2
MC_2
RH_1
T_9
T_{16}
T_{15}

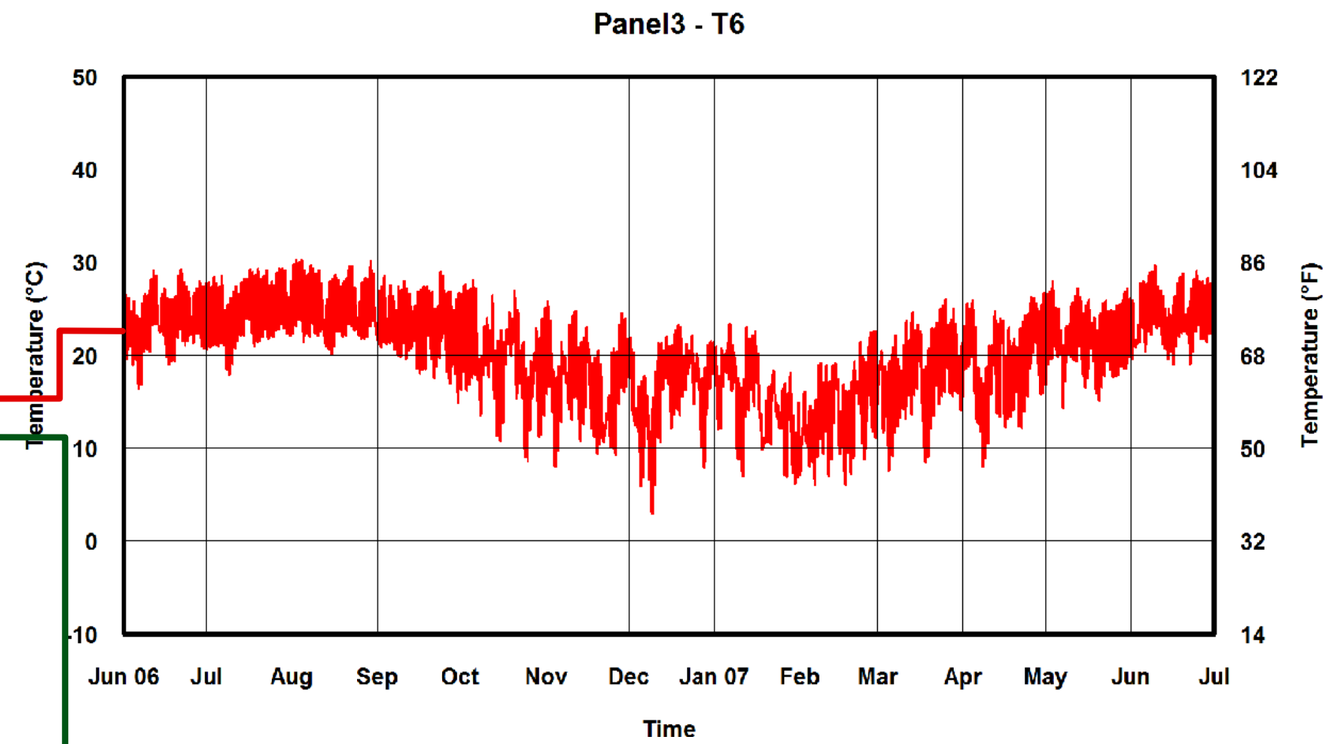
Panel3 - T6
Temperature (°C)
50
40
30
20
10
0
-10
Temperature (°F)
122
104
86
68
50
32
14
Jun 06
Jul
Aug
Sep
Oct
Nov
Dec
Jan 07
Feb
Mar
Apr
May
Jun
Jul
Time

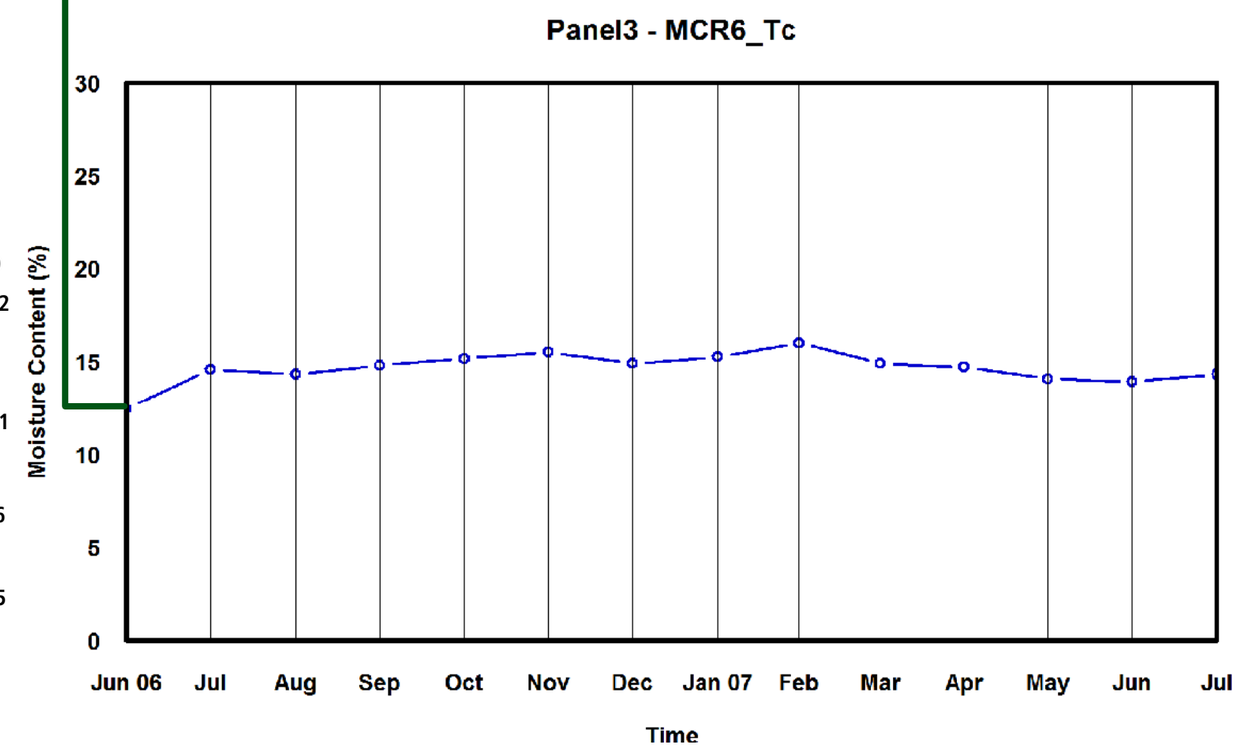
Panel3 - MCR6_Tc
Moisture Content (%)
30
25
20
15
10
5
0
Jun 06
Jul
Aug
Sep
Oct
Nov
Dec
Jan 07
Feb
Mar
Apr
May
Jun
Jul
Time

Panel 3

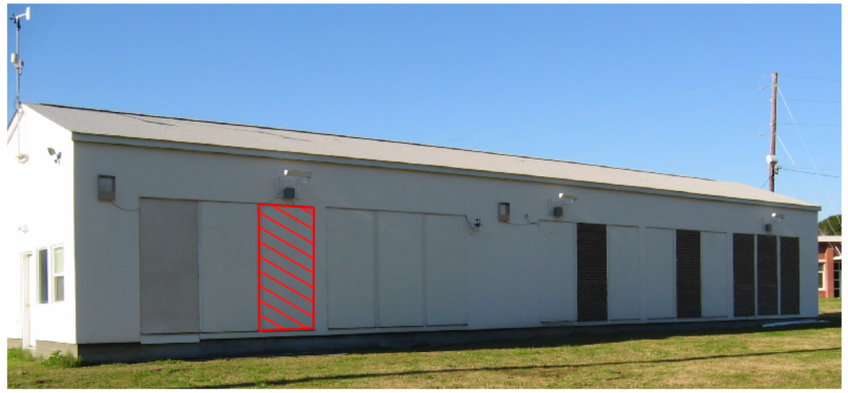

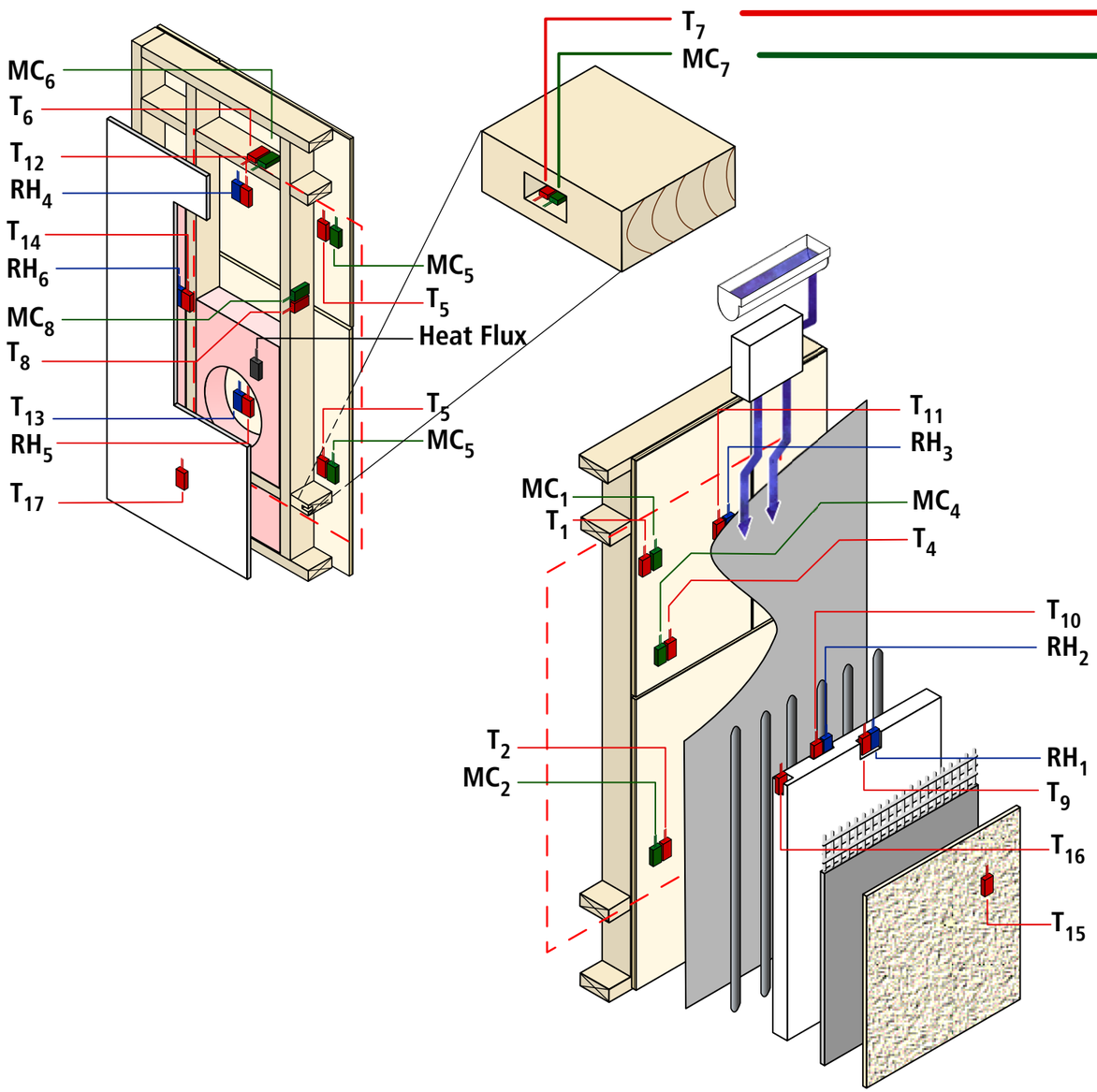
MC_6
T_6
T_{12}
RH_4
T_{14}
RH_6
MC_8
T_8
T_{13}
RH_5
T_{17}
T_7
MC_7
MC_5
T_5
Heat Flux
T_5
MC_5
T_{11}
RH_3
MC_1
T_1
MC_4
T_4
T_{10}
RH_2
T_2
MC_2
RH_1
T_9
T_{16}
T_{15}

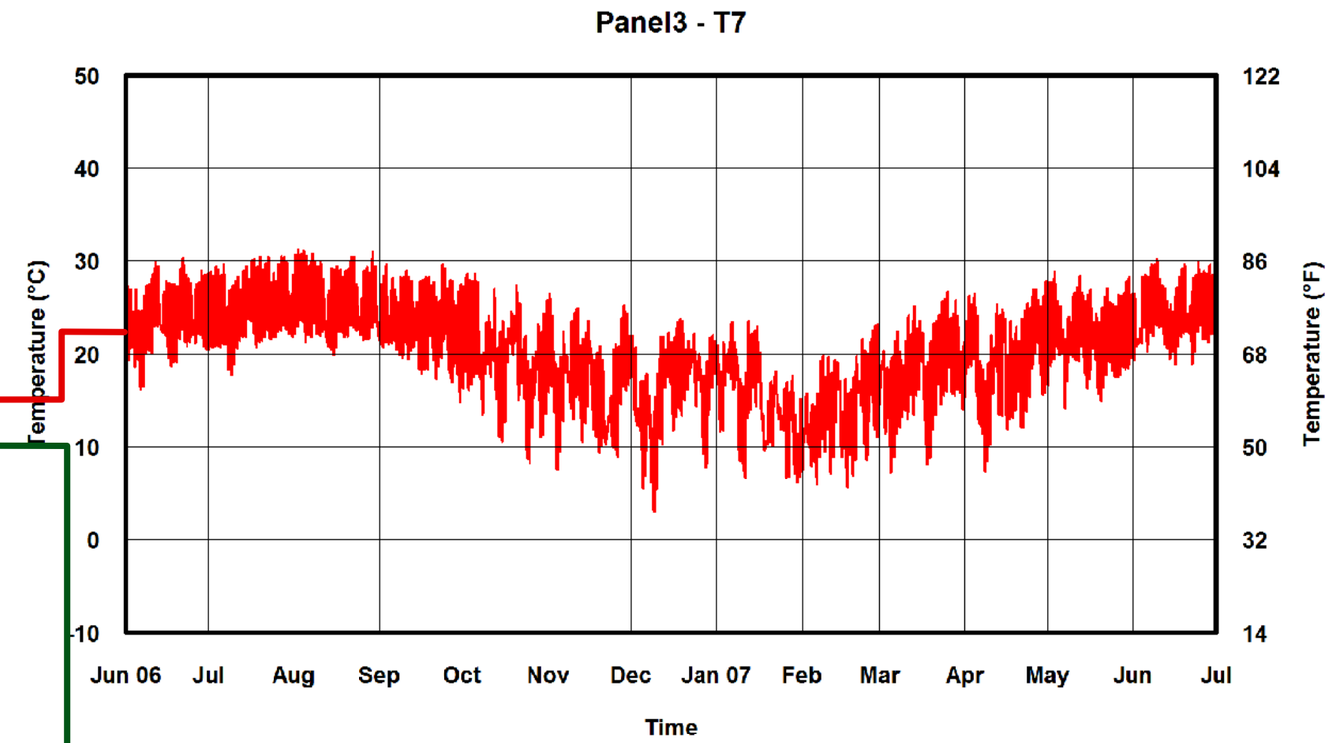
Panel3 - T7
Temperature (°C)
50
40
30
20
10
0
-10
Temperature (°F)
122
104
86
68
50
32
14
Jun 06
Jul
Aug
Sep
Oct
Nov
Dec
Jan 07
Feb
Mar
Apr
May
Jun
Jul
Time

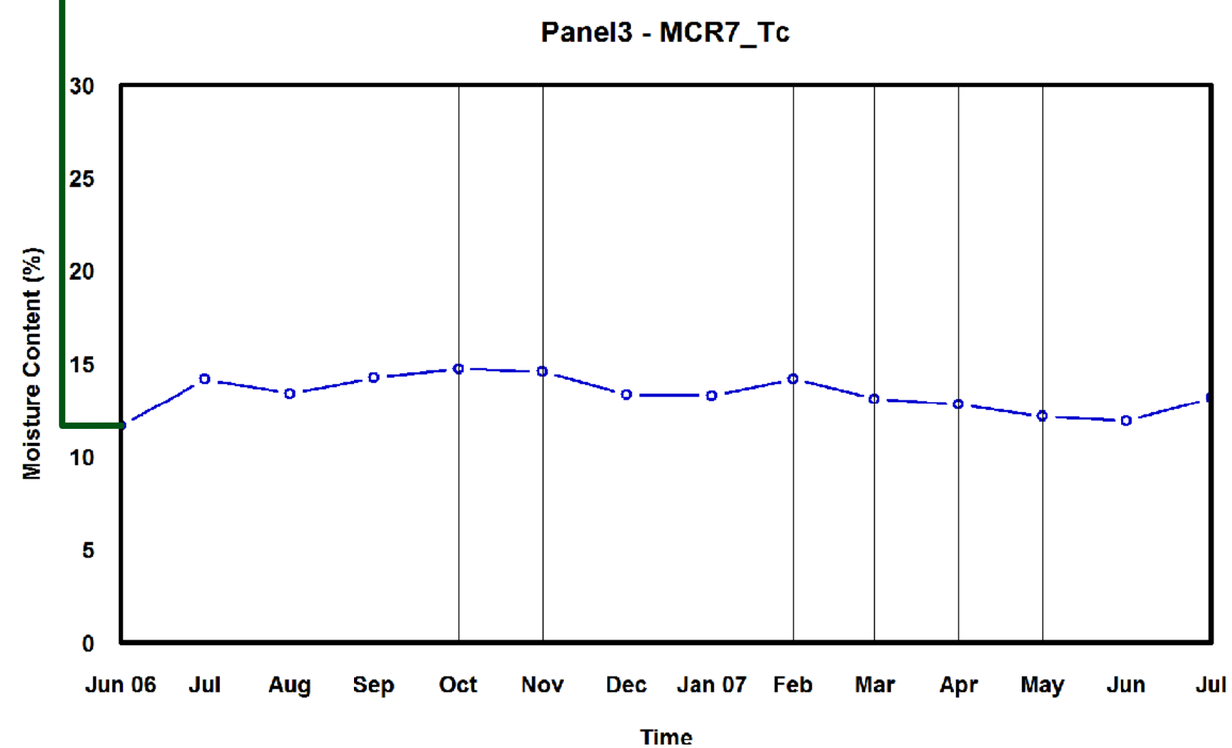
Panel3 - MCR7_Tc
Moisture Content (%)
30
25
20
15
10
5
0
Jun 06
Jul
Aug
Sep
Oct
Nov
Dec
Jan 07
Feb
Mar
Apr
May
Jun
Jul
Time

Panel 3

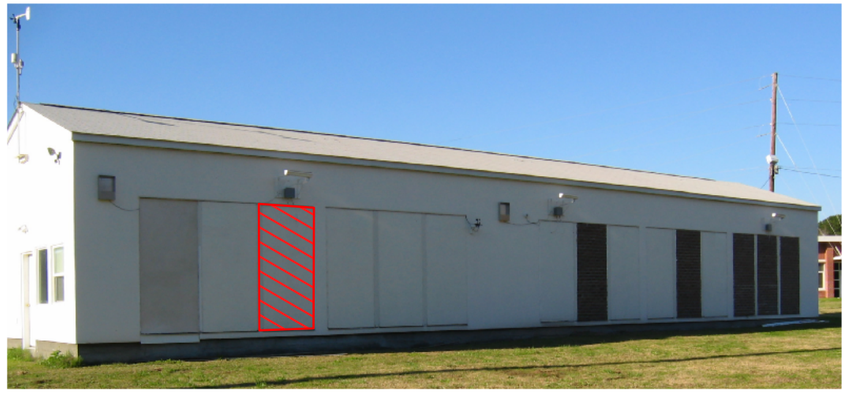

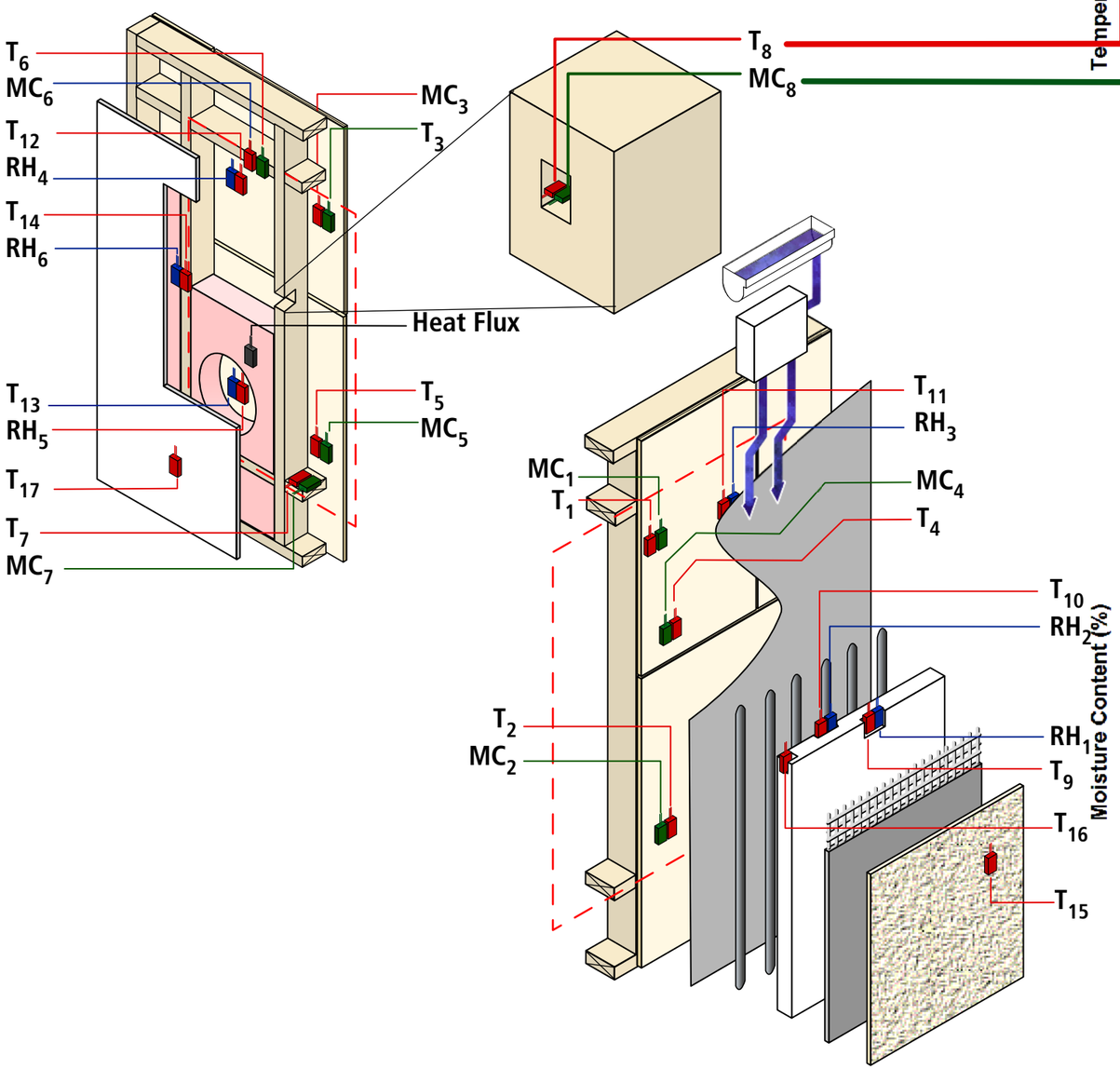
T_6
MC_6
T_{12}
RH_4
T_{14}
RH_6
MC_3
T_3
Heat Flux
T_{13}
RH_5
T_{17}
T_7
MC_7
T_5
MC_5
T_8
MC_8
T_{11}
RH_3
MC_1
T_1
MC_4
T_4
T_{10}
RH_2
T_2
MC_2
RH_1
T_9
T_{16}
T_{15}

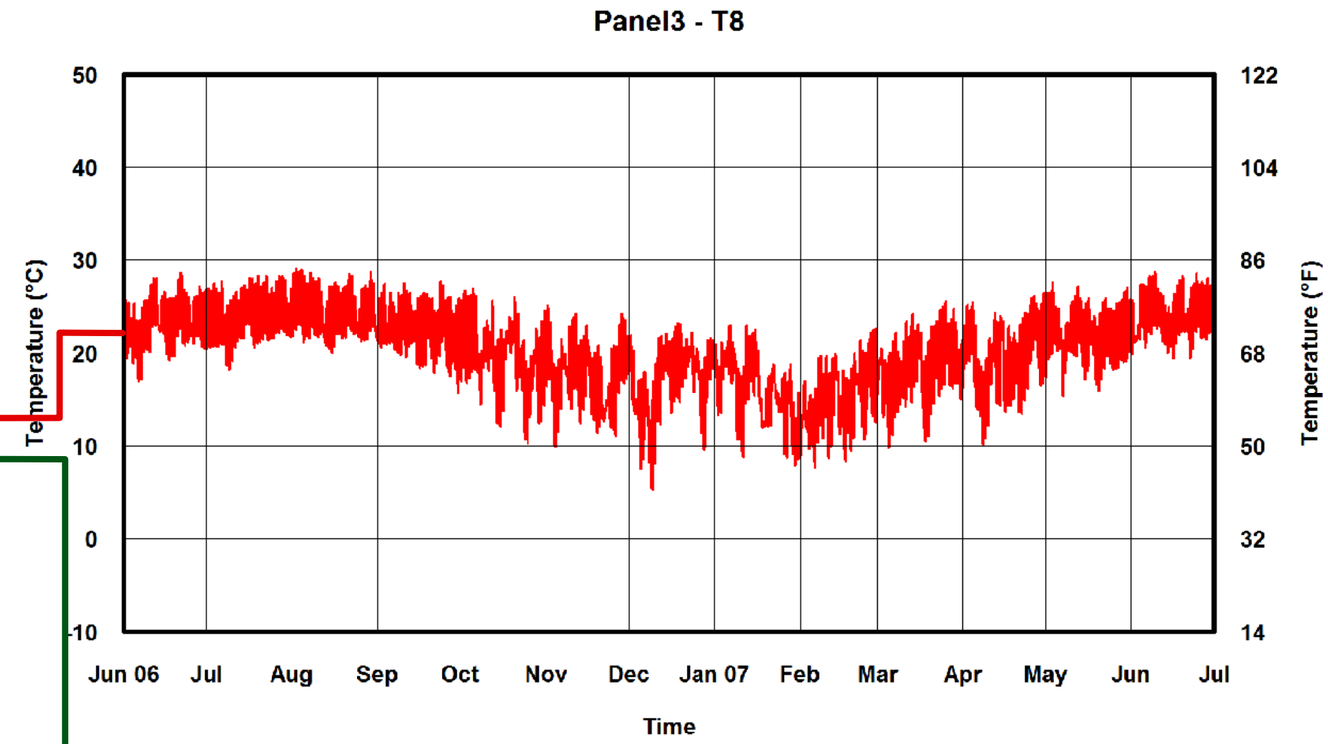
Panel3 - T8
Temperature (°C)
50
40
30
20
10
0
-10
Temperature (°F)
122
104
86
68
50
32
14
Jun 06
Jul
Aug
Sep
Oct
Nov
Dec
Jan 07
Feb
Mar
Apr
May
Jun
Jul
Time

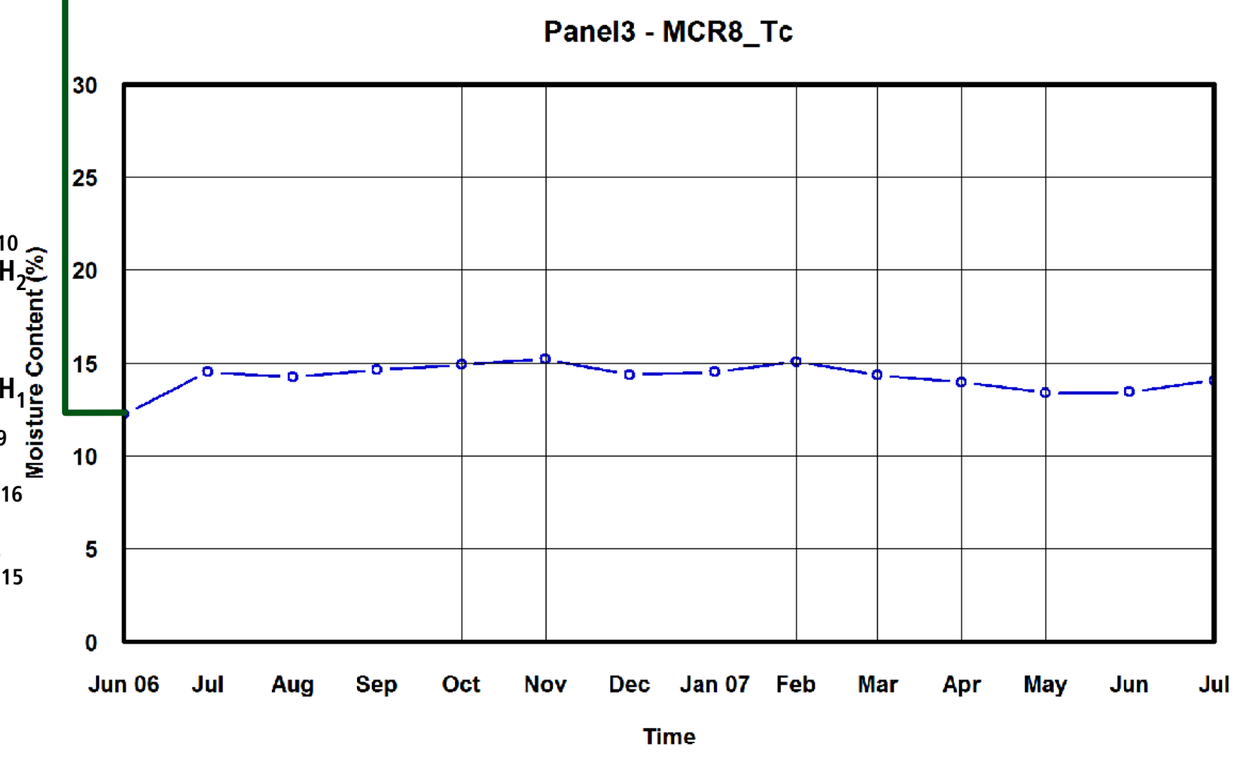
Panel3 - MCR8_Tc
Moisture Content (%)
30
25
20
15
10
5
0
Jun 06
Jul
Aug
Sep
Oct
Nov
Dec
Jan 07
Feb
Mar
Apr
May
Jun
Jul
Time

Panel 3

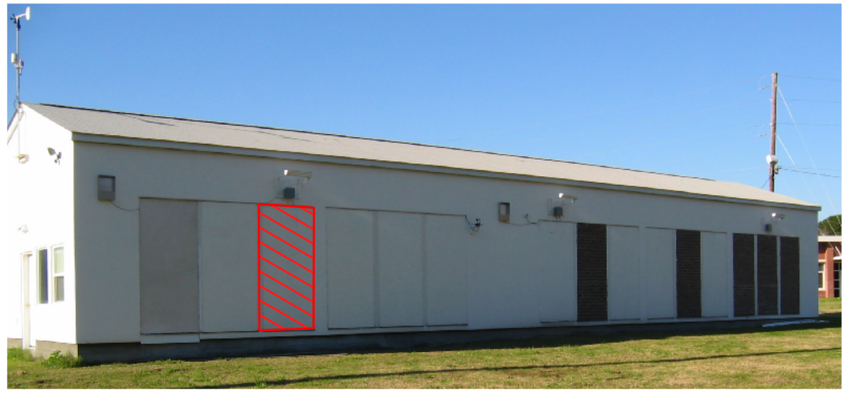

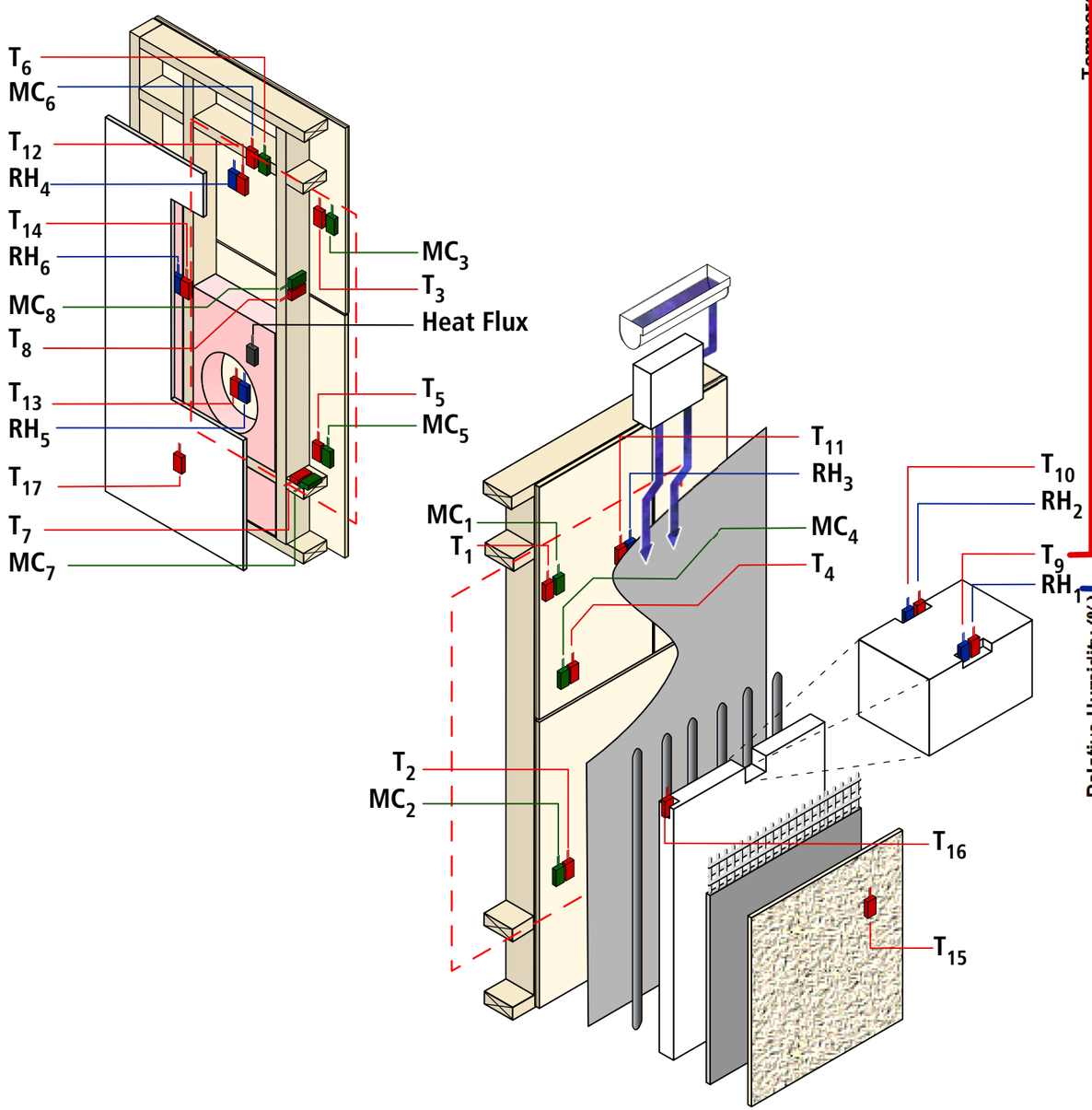
T_6
MC_6
T_{12}
RH_4
T_{14}
RH_6
MC_8
T_8
T_{13}
RH_5
T_{17}
T_7
MC_7
MC_3
T_3
Heat Flux
T_5
MC_5
T_{11}
RH_3
MC_1
T_1
MC_4
T_4
T_{10}
RH_2
T_9
RH_1
T_2
MC_2
T_{16}
T_{15}

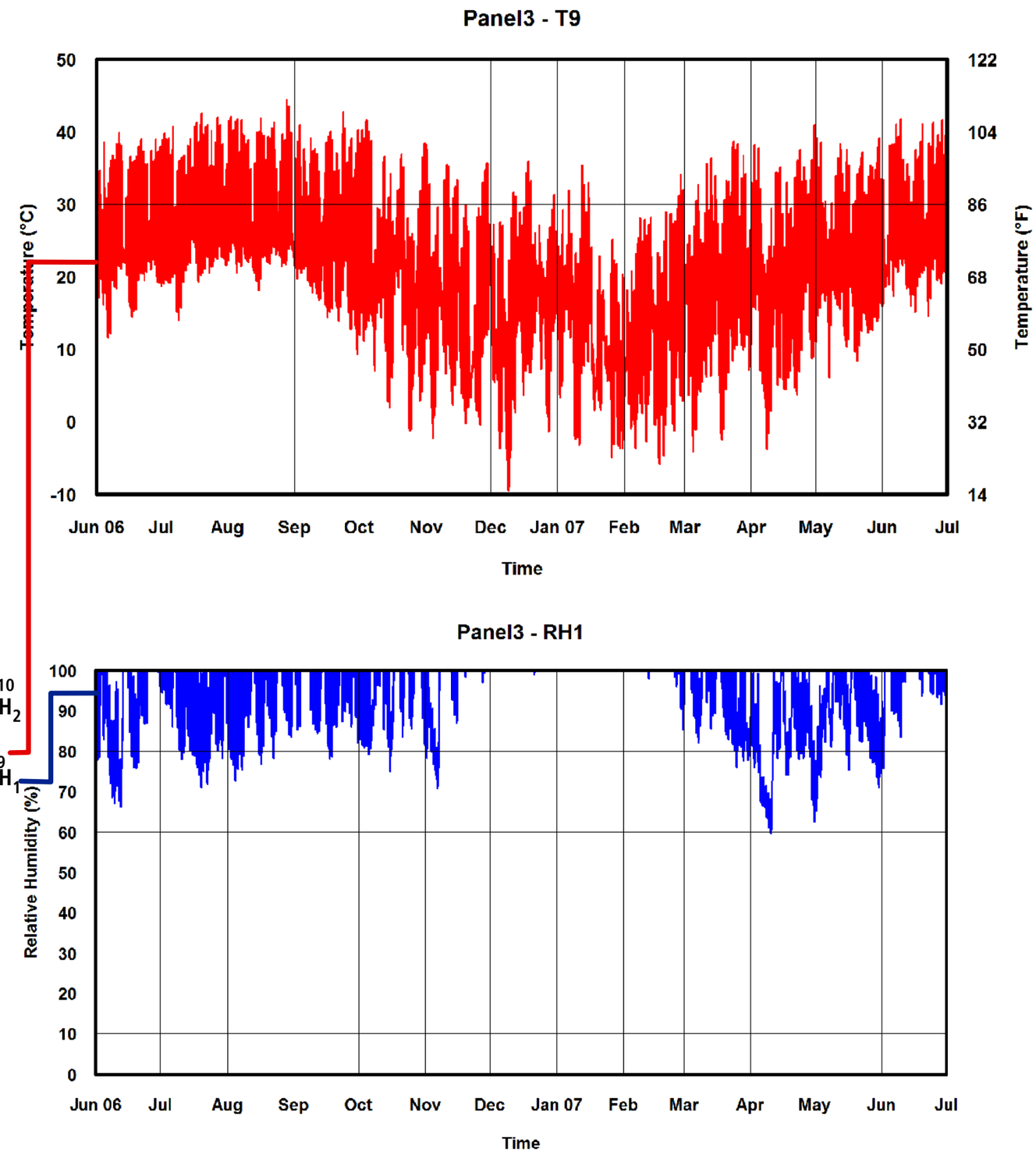
Panel3 - T9
Temperature (°C)
Temperature (°F)
50
40
30
20
10
0
-10
122
104
86
68
50
32
14
Jun 06
Jul
Aug
Sep
Oct
Nov
Dec
Jan 07
Feb
Mar
Apr
May
Jun
Jul
Time
Panel3 - RH1
Relative Humidity (%)
100
90
80
70
60
50
40
30
20
10
0
Jun 06
Jul
Aug
Sep
Oct
Nov
Dec
Jan 07
Feb
Mar
Apr
May
Jun
Jul
Time

Panel 3

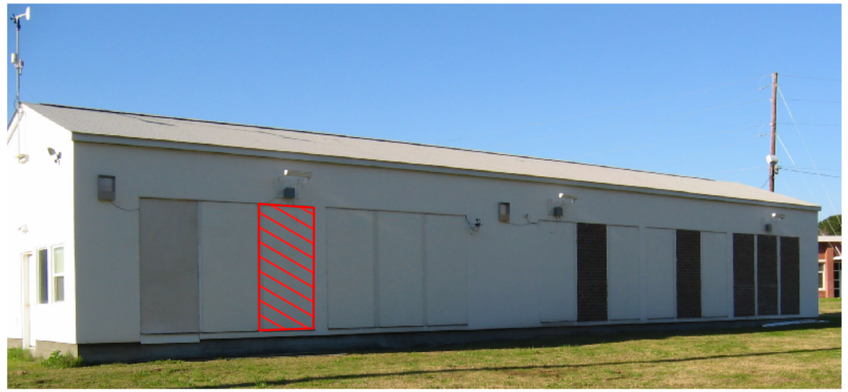

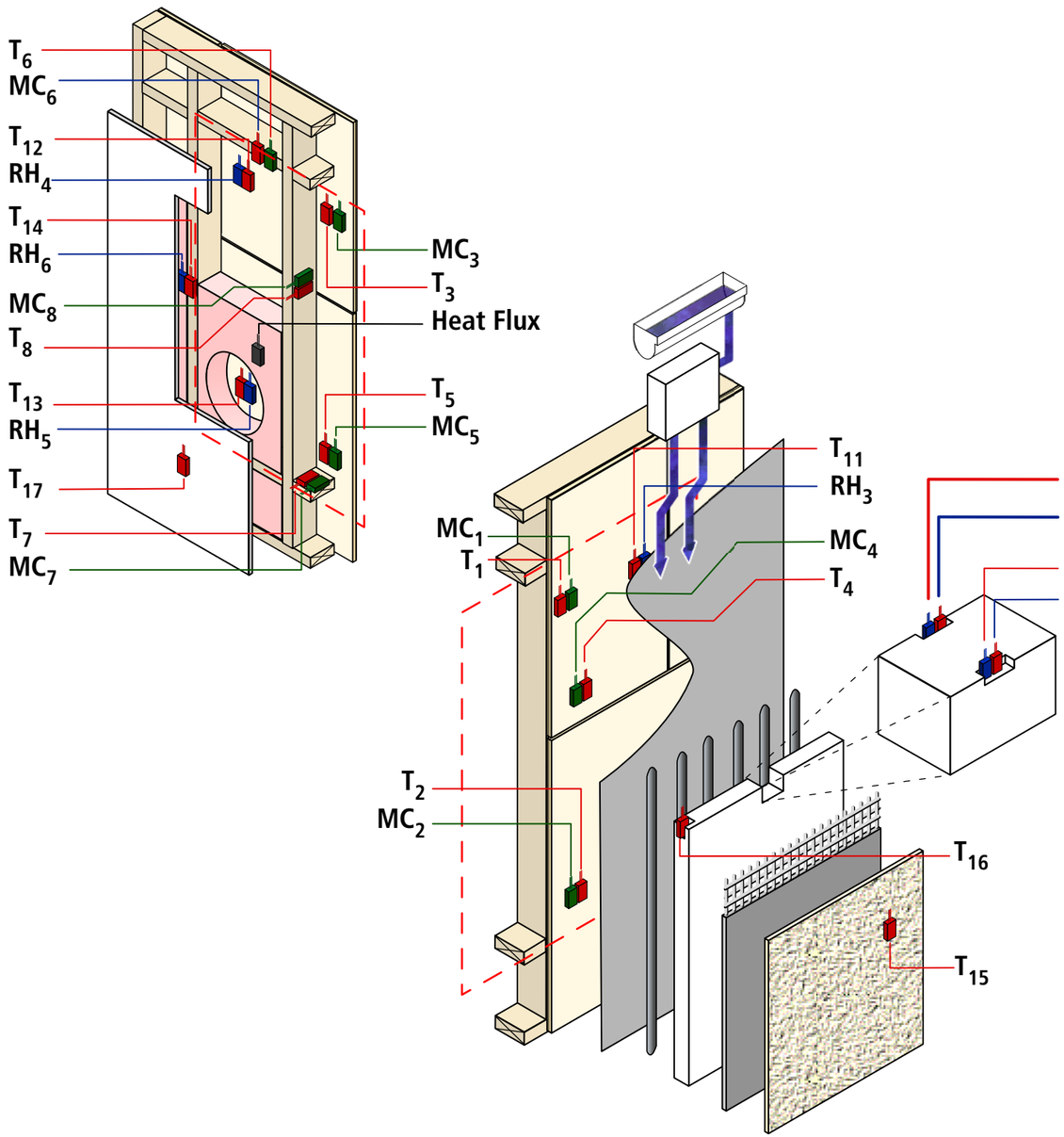
T_6
MC_6
T_{12}
RH_4
T_{14}
RH_6
MC_8
T_8
T_{13}
RH_5
T_{17}
T_7
MC_7
MC_3
T_3
Heat Flux
T_5
MC_5
T_{11}
RH_3
MC_1
T_1
MC_4
T_4
T_{10}
RH_2
T_9
RH_1
T_2
MC_2
T_{16}
T_{15}

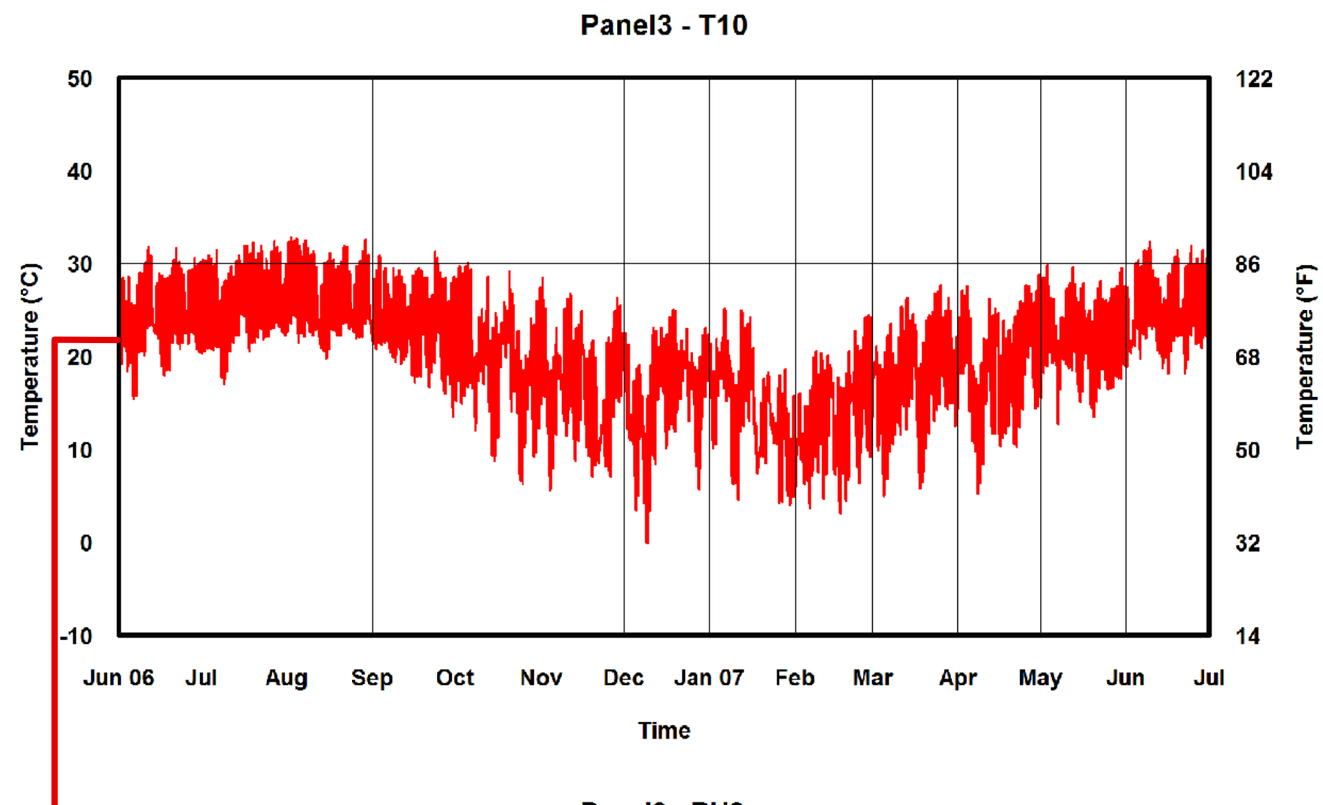
Panel3 - T10
Temperature (°C)
50
40
30
20
10
0
-10
Temperature (°F)
122
104
86
68
50
32
14
Jun 06
Jul
Aug
Sep
Oct
Nov
Dec
Jan 07
Feb
Mar
Apr
May
Jun
Jul
Time

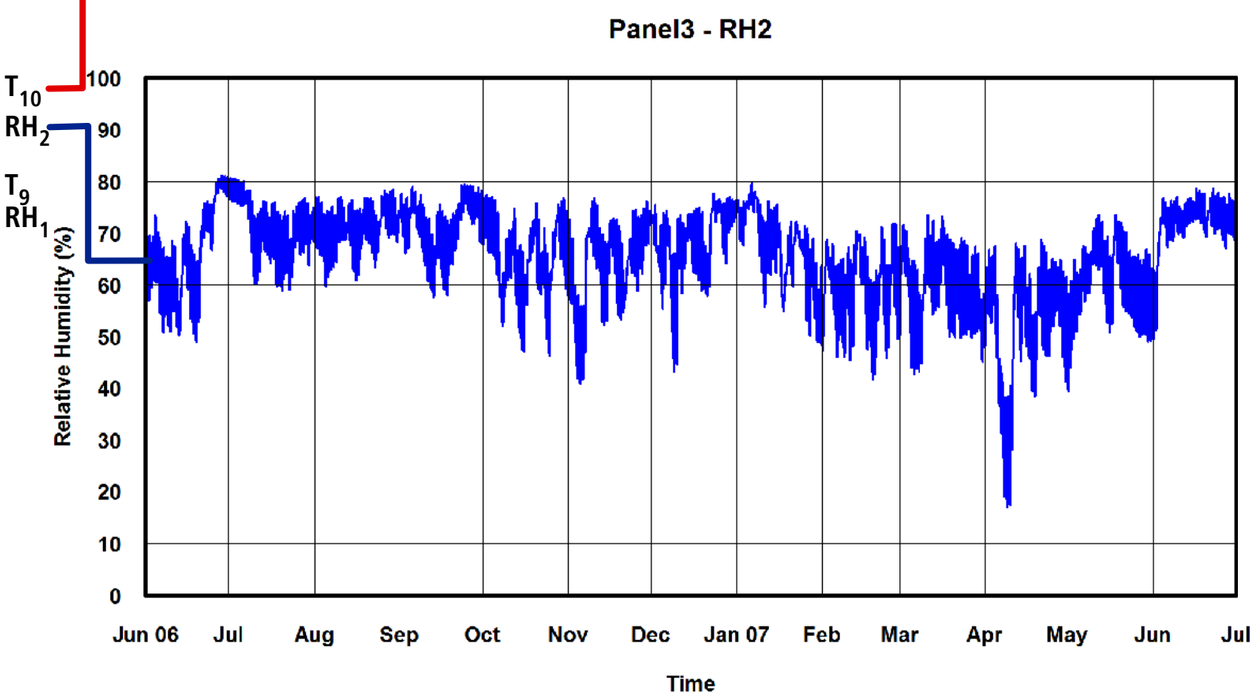
Panel3 - RH2
Relative Humidity (%)
100
90
80
70
60
50
40
30
20
10
0
Jun 06
Jul
Aug
Sep
Oct
Nov
Dec
Jan 07
Feb
Mar
Apr
May
Jun
Jul
Time

Panel 3

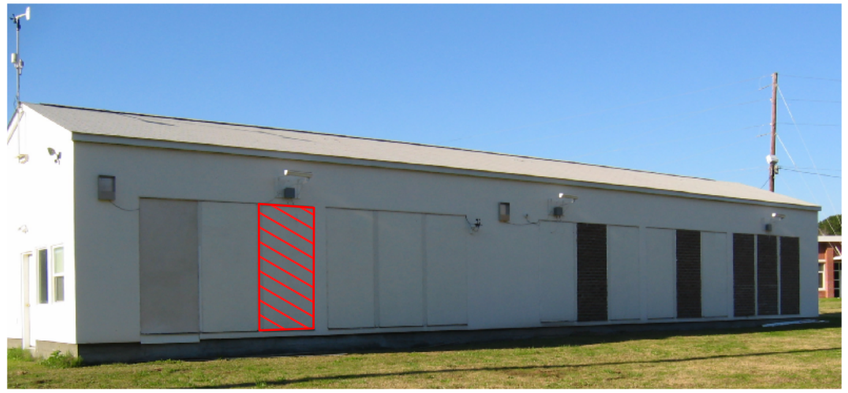

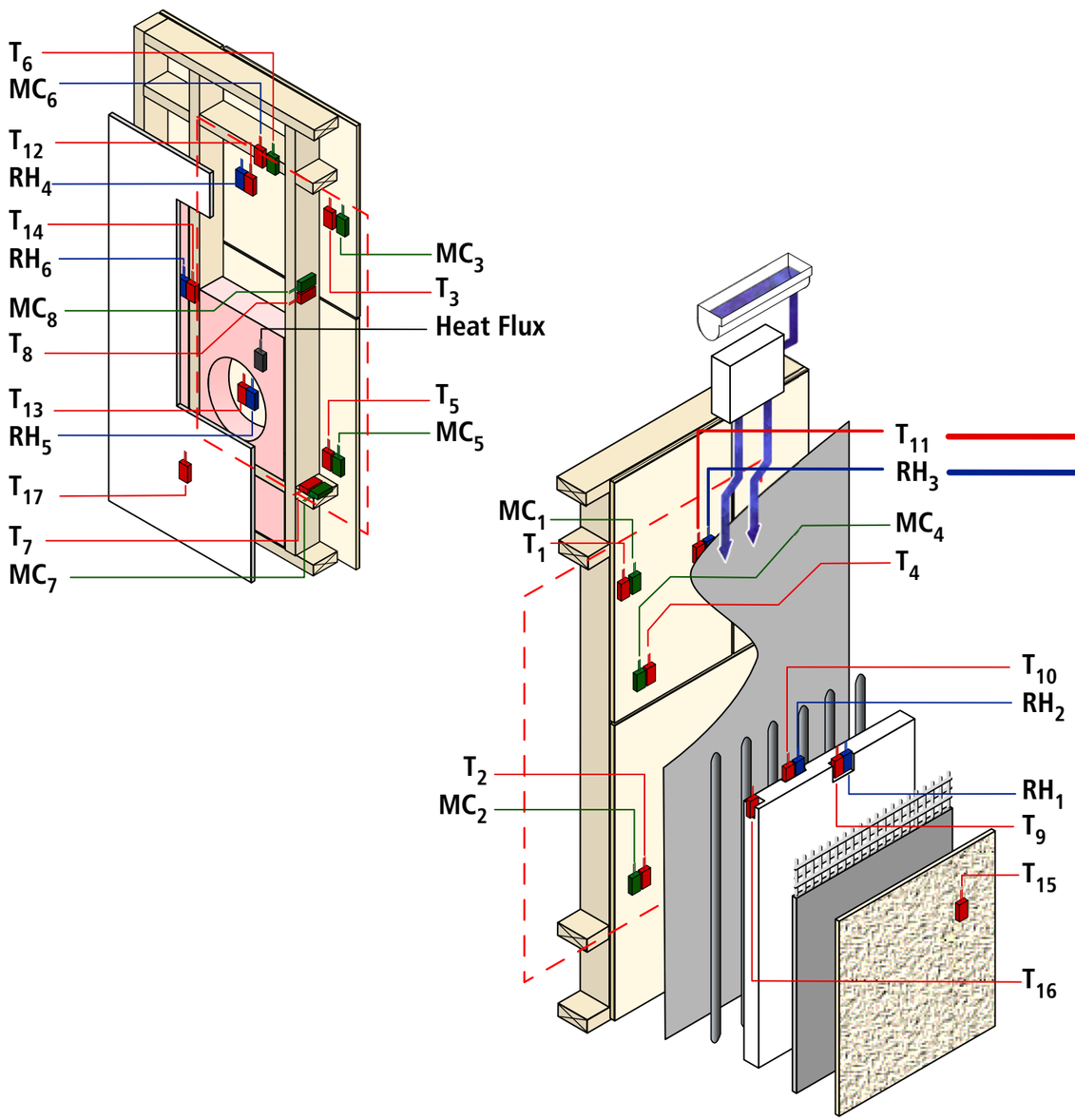
T_6
MC_6
T_{12}
RH_4
T_{14}
RH_6
MC_8
T_8
T_{13}
RH_5
T_{17}
T_7
MC_7
MC_3
T_3
Heat Flux
T_5
MC_5
T_{11}
RH_3
MC_1
T_1
MC_4
T_4
T_{10}
RH_2
T_2
MC_2
RH_1
T_9
T_{15}
T_{16}

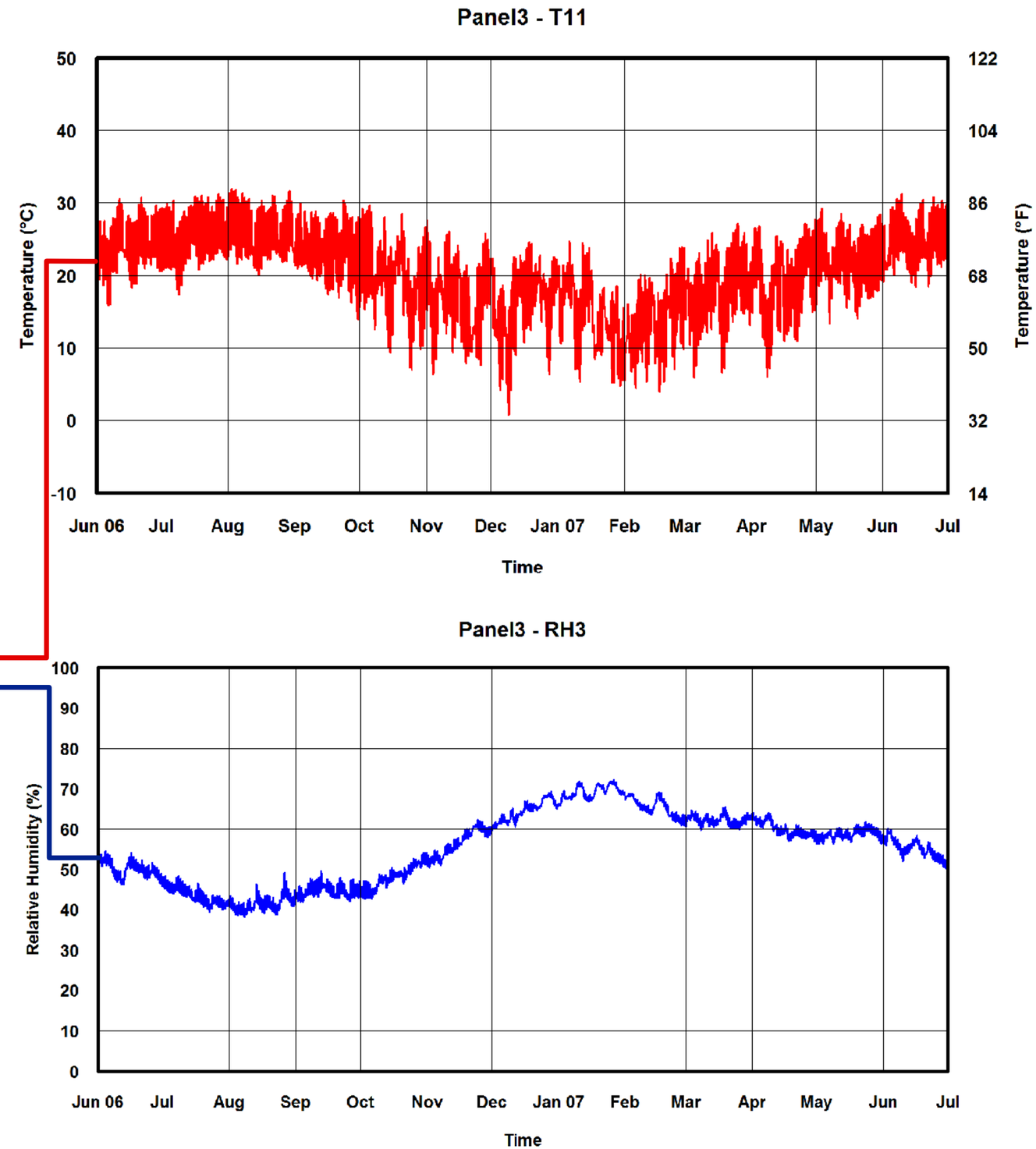
Panel3 - T11
Temperature (°C)
50
40
30
20
10
0
-10
Temperature (°F)
122
104
86
68
50
32
14
Jun 06
Jul
Aug
Sep
Oct
Nov
Dec
Jan 07
Feb
Mar
Apr
May
Jun
Jul
Time
Panel3 - RH3
Relative Humidity (%)
100
90
80
70
60
50
40
30
20
10
0
Jun 06
Jul
Aug
Sep
Oct
Nov
Dec
Jan 07
Feb
Mar
Apr
May
Jun
Jul
Time

Panel 3

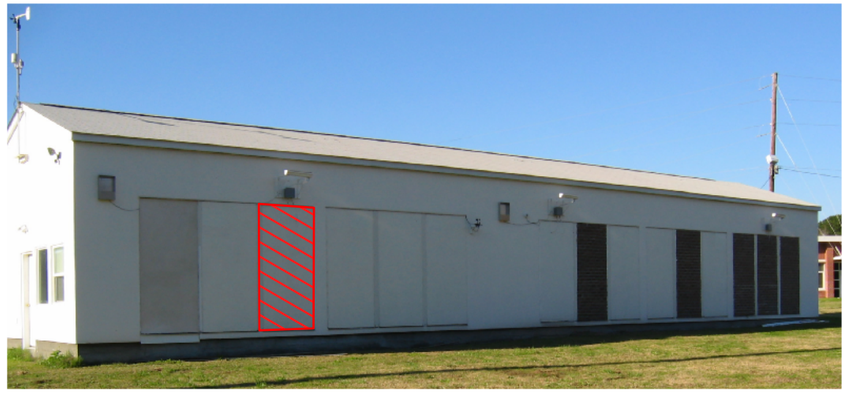

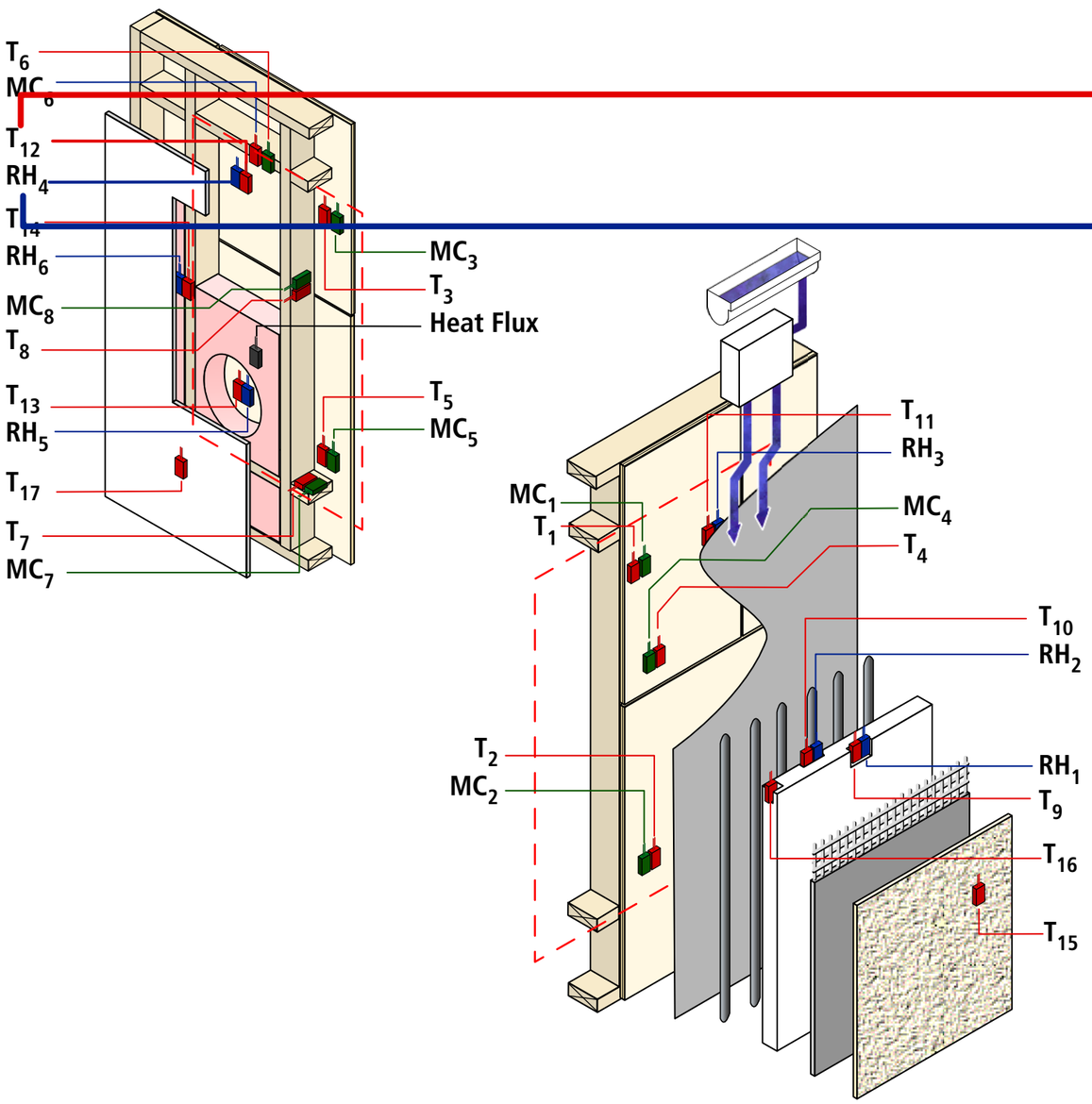
T_6
MC_6
T_{12}
RH_4
T_{14}
RH_6
MC_8
T_8
T_{13}
RH_5
T_{17}
T_7
MC_7
MC_3
T_3
Heat Flux
T_5
MC_5
T_{11}
RH_3
MC_1
T_1
MC_4
T_4
T_{10}
RH_2
T_2
MC_2
RH_1
T_9
T_{16}
T_{15}

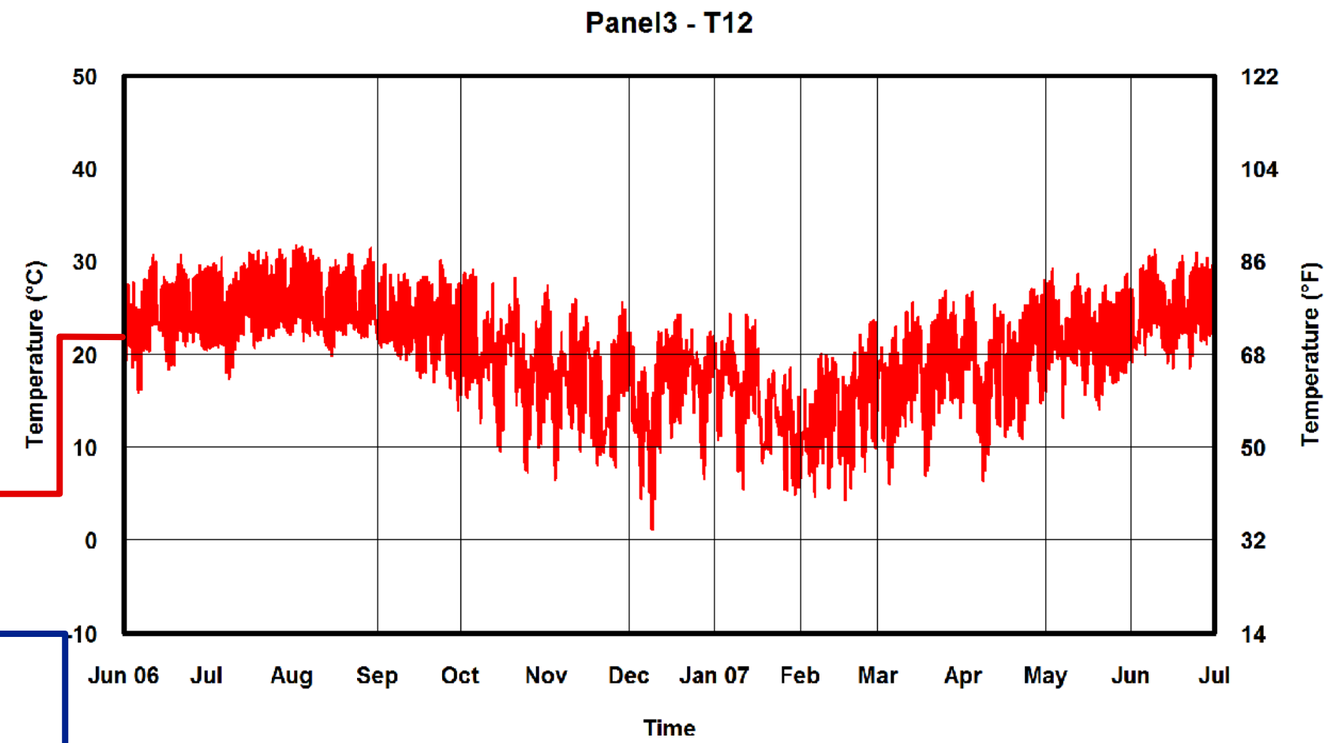
Panel3 - T12
Temperature (°C)
50
40
30
20
10
0
-10
Temperature (°F)
122
104
86
68
50
32
14
Jun 06
Jul
Aug
Sep
Oct
Nov
Dec
Jan 07
Feb
Mar
Apr
May
Jun
Jul
Time

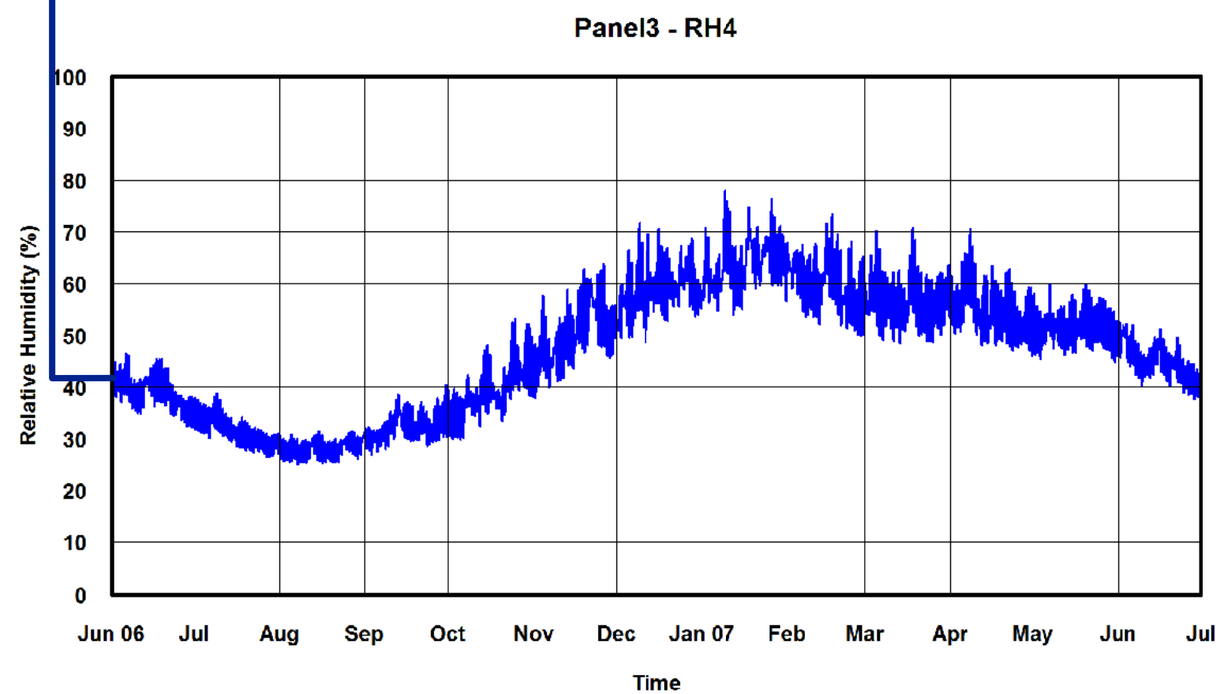
Panel3 - RH4
Relative Humidity (%)
100
90
80
70
60
50
40
30
20
10
0
Jun 06
Jul
Aug
Sep
Oct
Nov
Dec
Jan 07
Feb
Mar
Apr
May
Jun
Jul
Time

Panel 3

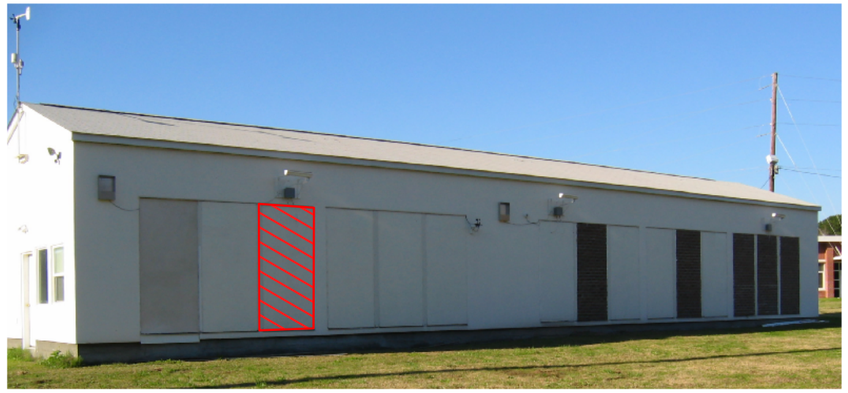

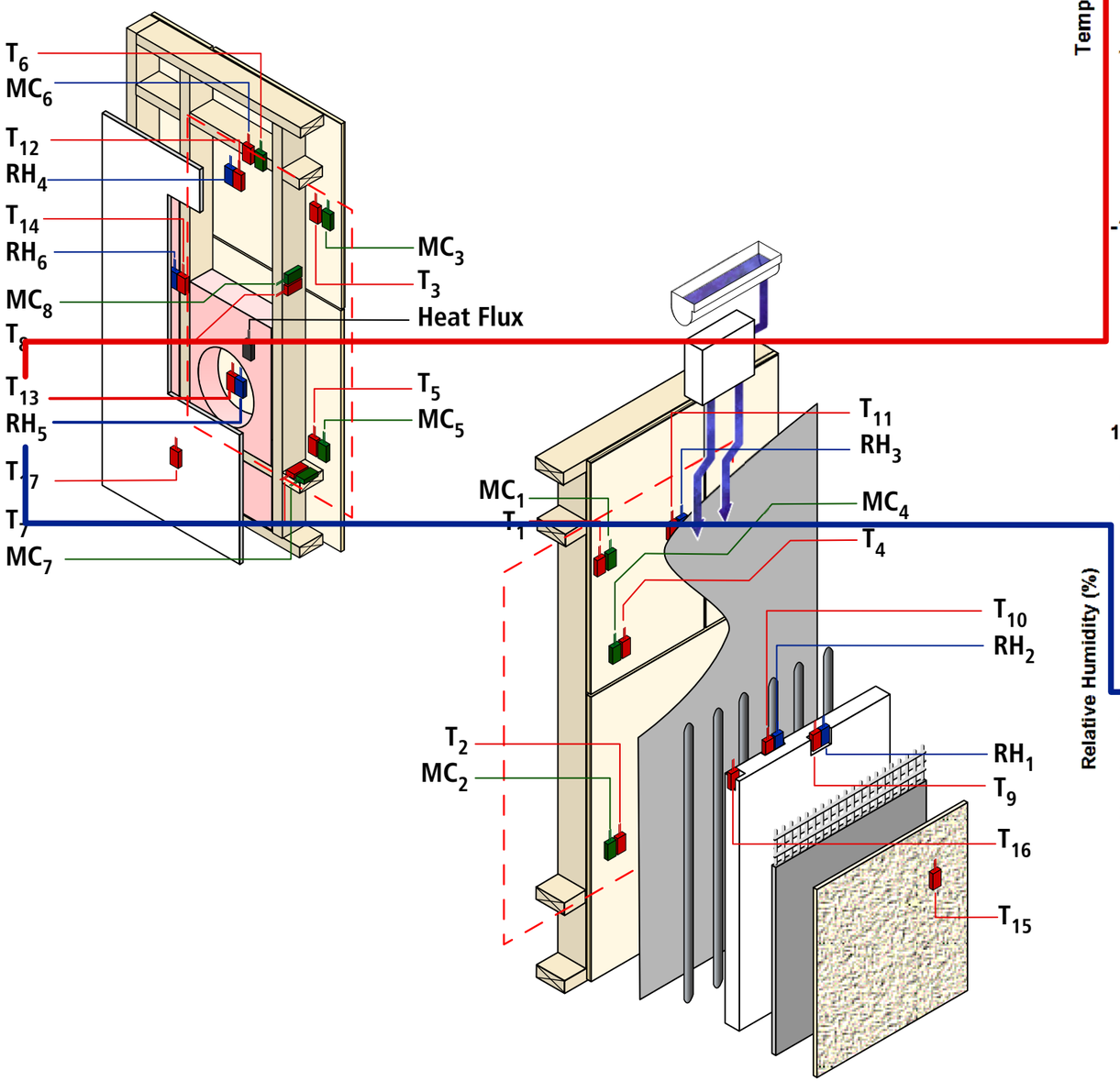
T_6
MC_6
T_{12}
RH_4
T_{14}
RH_6
MC_8
T_8
T_{13}
RH_5
T_7
T_1
MC_7
MC_3
T_3
Heat Flux
T_5
MC_5
MC_1
T_1
T_{11}
RH_3
MC_4
T_4
T_{10}
RH_2
T_2
MC_2
RH_1
T_9
T_{16}
T_{15}

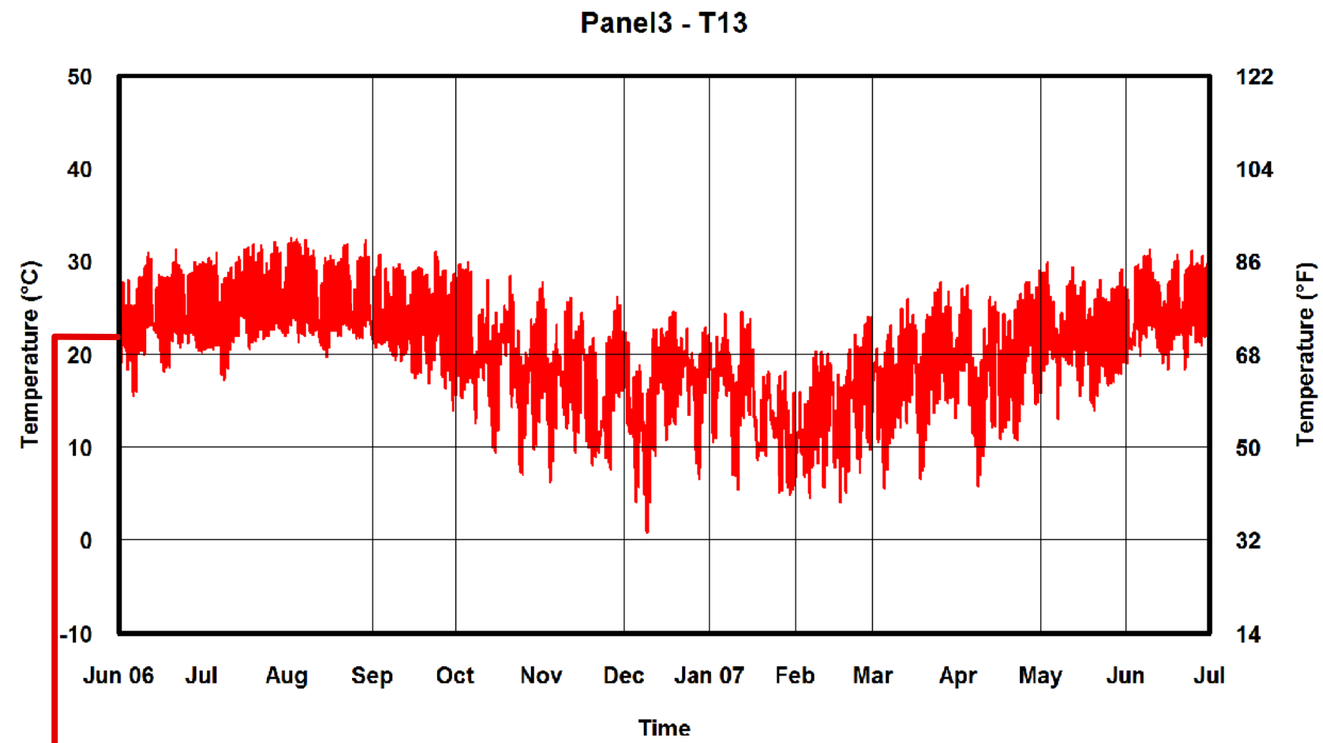
Panel3 - T13
Temperature (°C)
50
40
30
20
10
0
-10
Temperature (°F)
122
104
86
68
50
32
14
Jun 06
Jul
Aug
Sep
Oct
Nov
Dec
Jan 07
Feb
Mar
Apr
May
Jun
Jul
Time

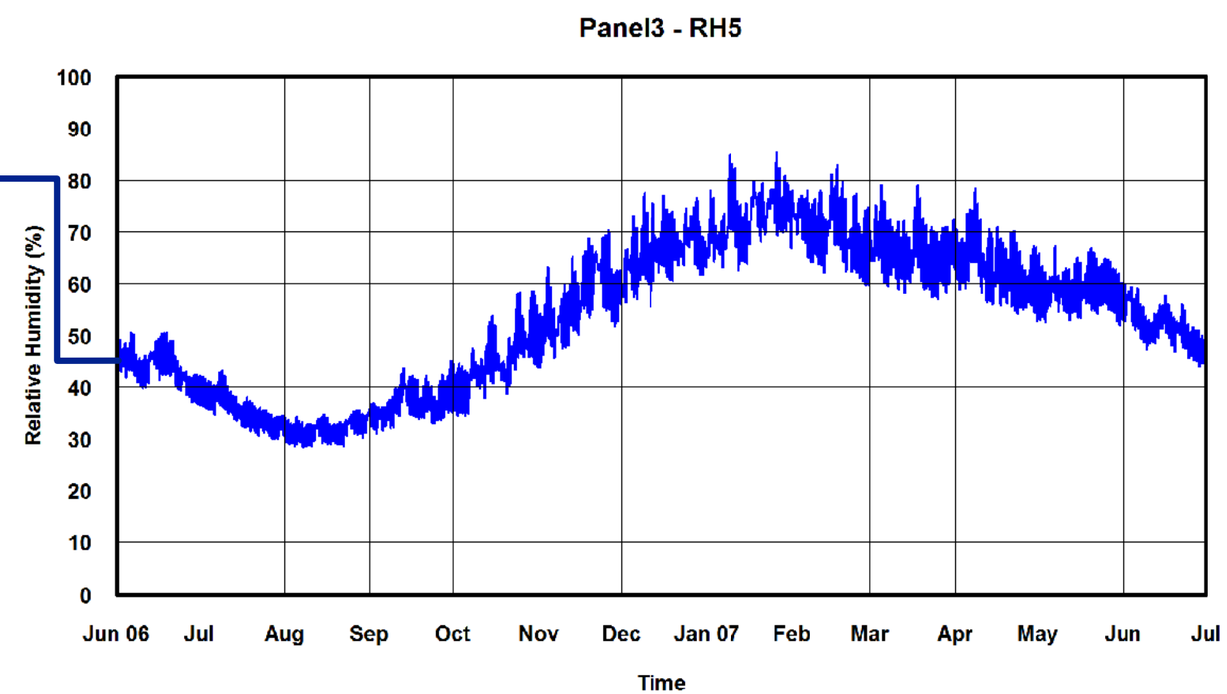
Panel3 - RH5
Relative Humidity (%)
100
90
80
70
60
50
40
30
20
10
0
Jun 06
Jul
Aug
Sep
Oct
Nov
Dec
Jan 07
Feb
Mar
Apr
May
Jun
Jul
Time

Panel 3

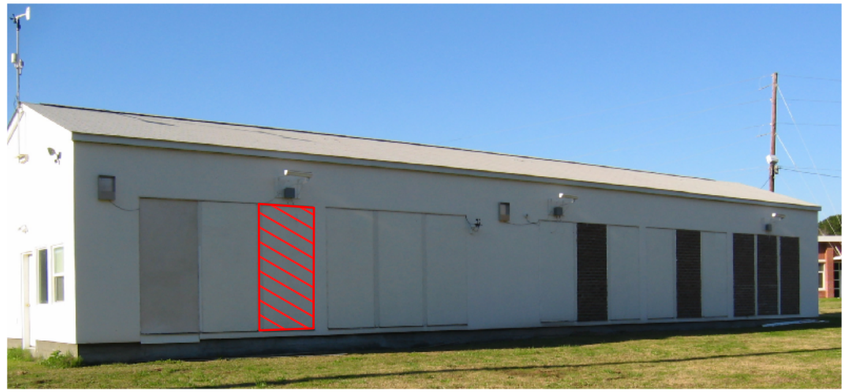

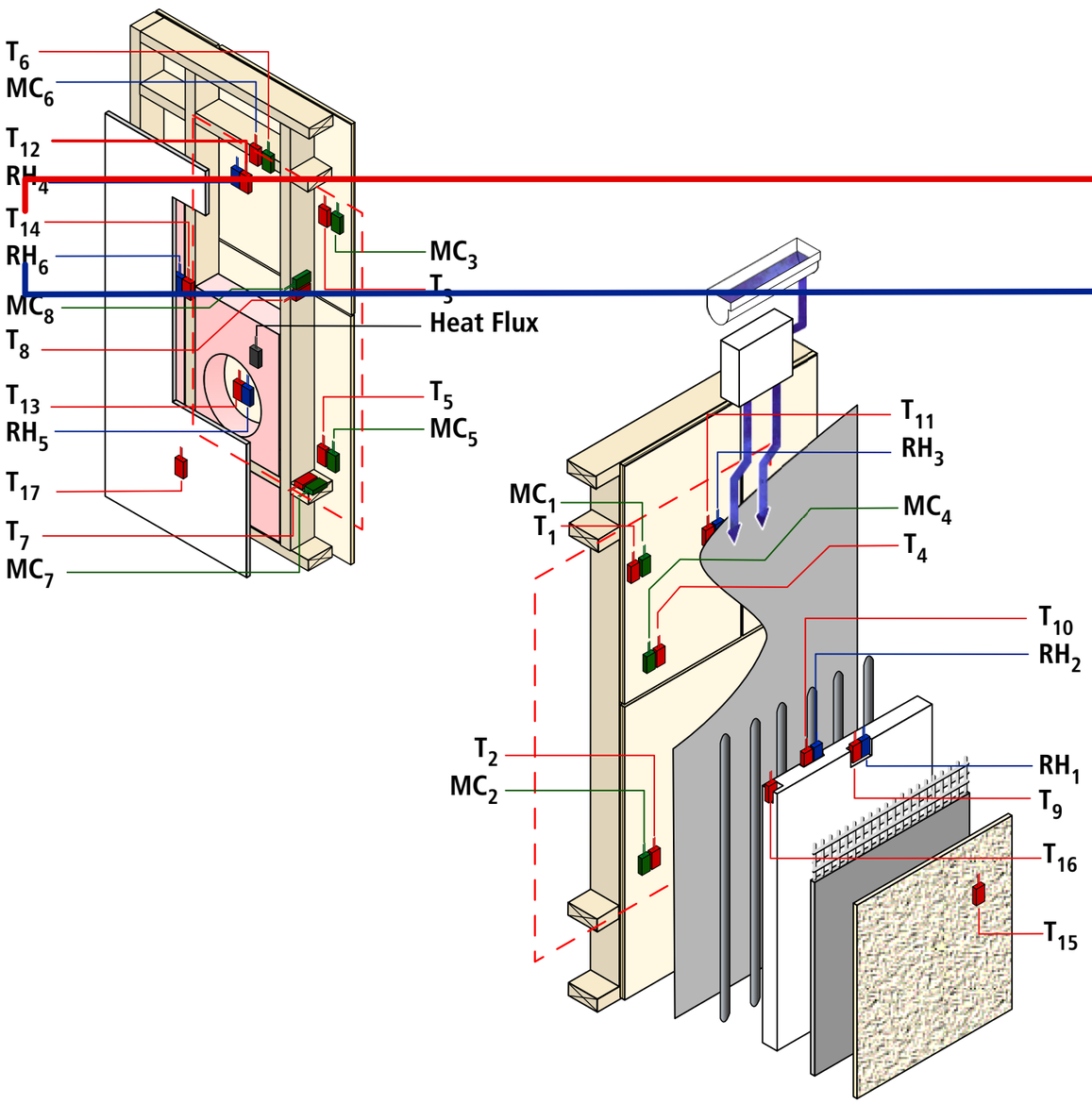
T_6
MC_6
T_{12}
RH_4
T_{14}
RH_6
MC_8
T_8
T_{13}
RH_5
T_{17}
T_7
MC_7
MC_3
T_3
Heat Flux
T_5
MC_5
T_{11}
RH_3
MC_1
T_1
MC_4
T_4
T_{10}
RH_2
T_2
MC_2
RH_1
T_9
T_{16}
T_{15}

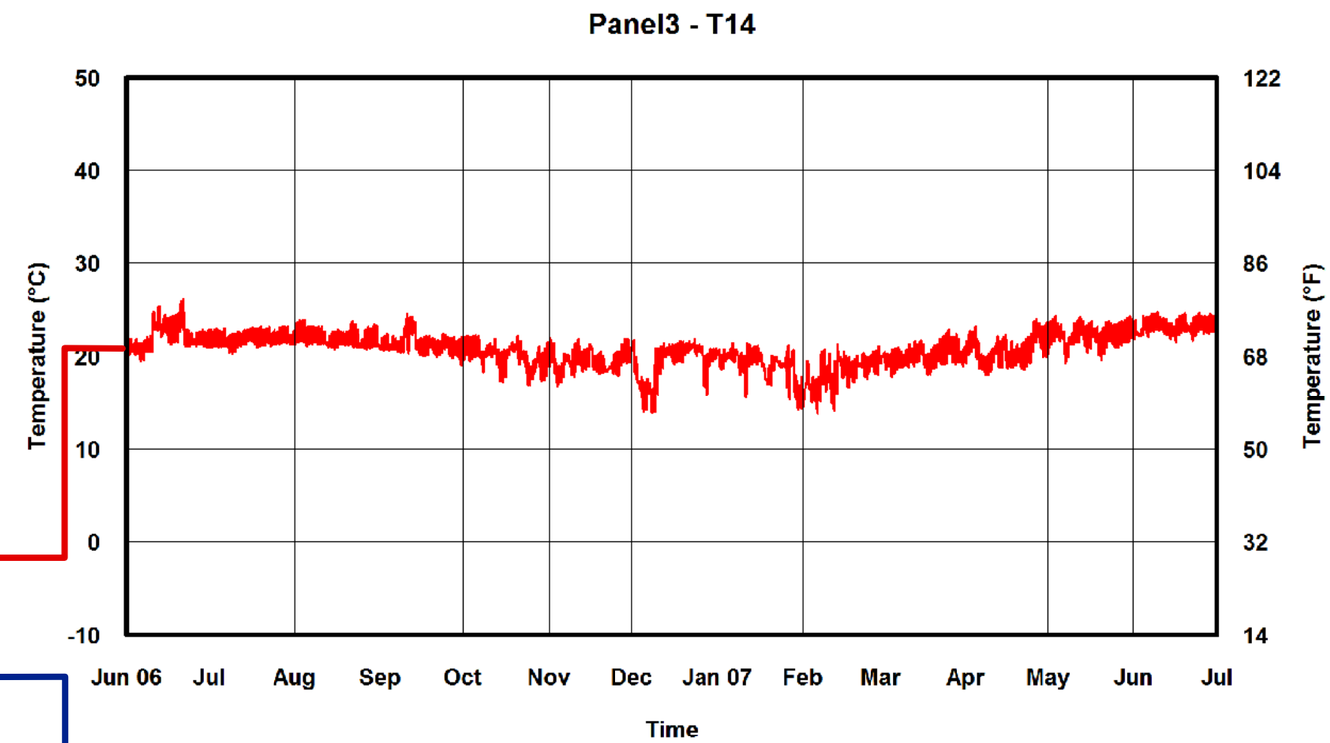
Panel3 - T14
Temperature (°C)
Temperature (°F)
50
40
30
20
10
0
-10
122
104
86
68
50
32
14
Jun 06
Jul
Aug
Sep
Oct
Nov
Dec
Jan 07
Feb
Mar
Apr
May
Jun
Jul
Time

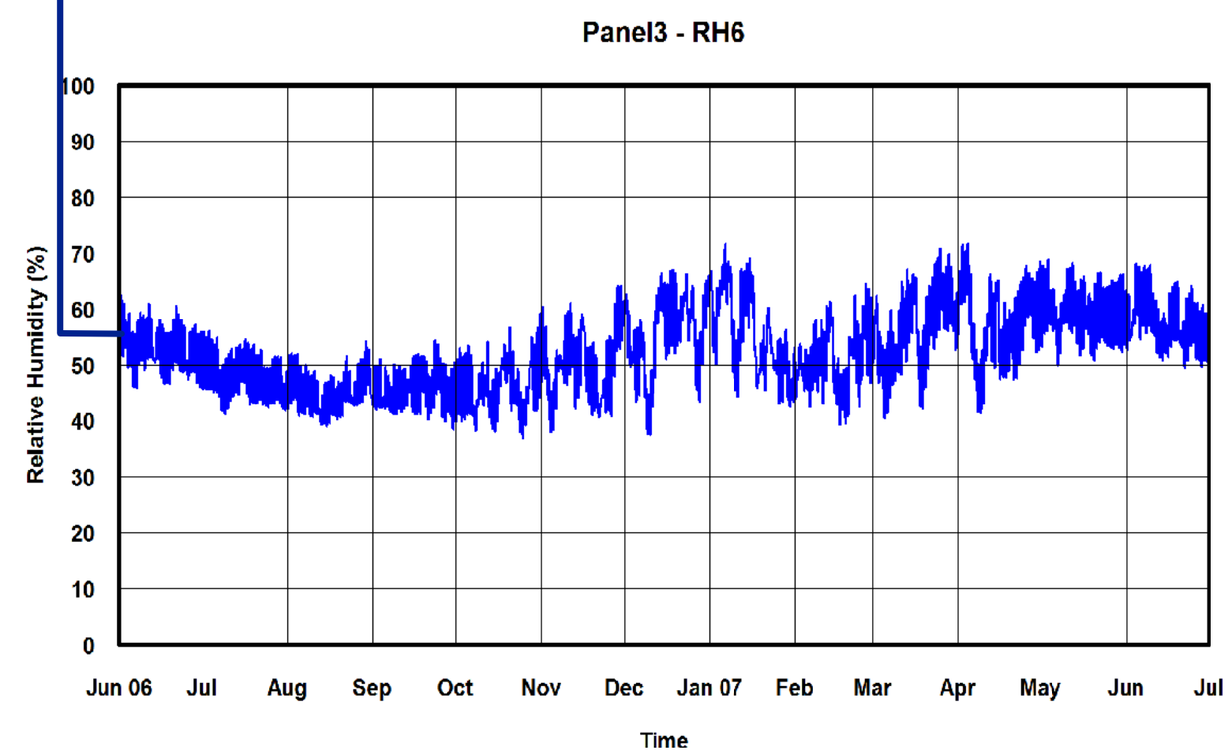
Panel3 - RH6
Relative Humidity (%)
100
90
80
70
60
50
40
30
20
10
0
Jun 06
Jul
Aug
Sep
Oct
Nov
Dec
Jan 07
Feb
Mar
Apr
May
Jun
Jul
Time

Panel 3

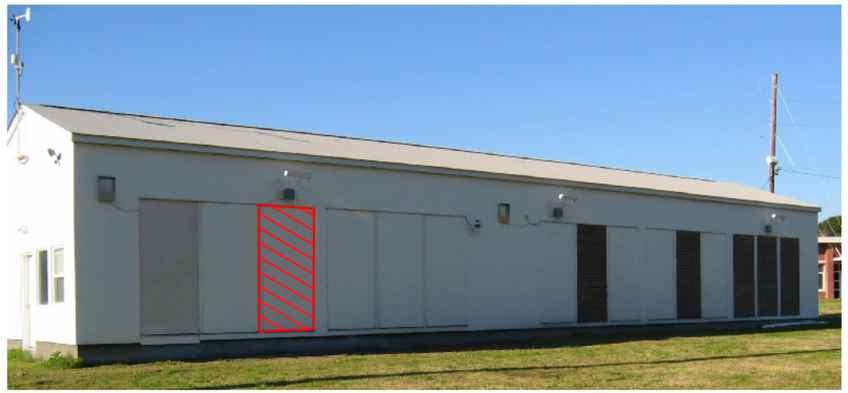

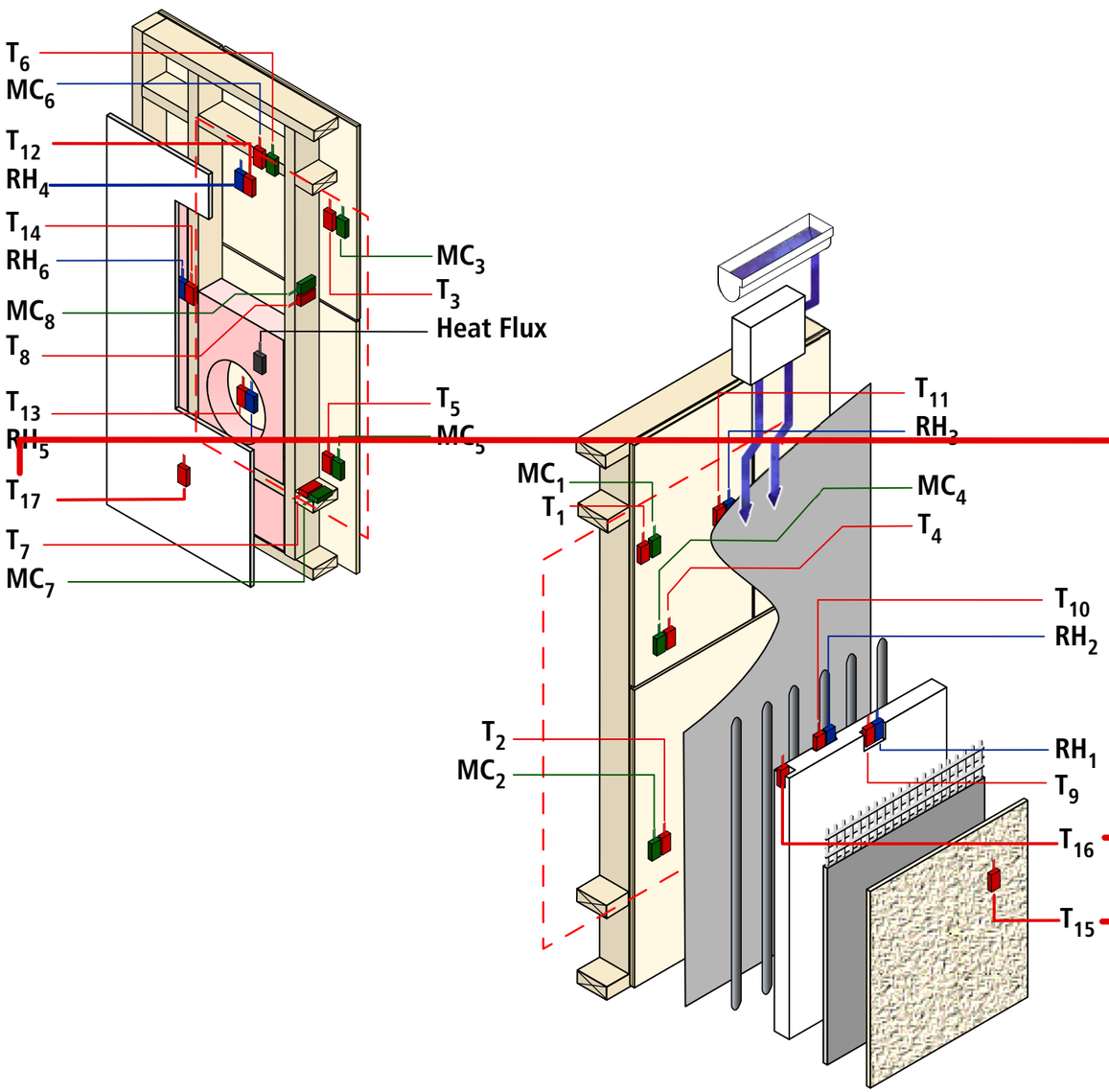
T_6
MC_6
T_{12}
RH_4
T_{14}
RH_6
MC_8
T_8
T_{13}
RH_5
T_{17}
T_7
MC_7
MC_3
T_3
Heat Flux
T_5
MC_5
MC_1
T_1
T_{11}
RH_3
MC_4
T_4
T_{10}
RH_2
T_2
MC_2
RH_1
T_9
T_{16}
T_{15}

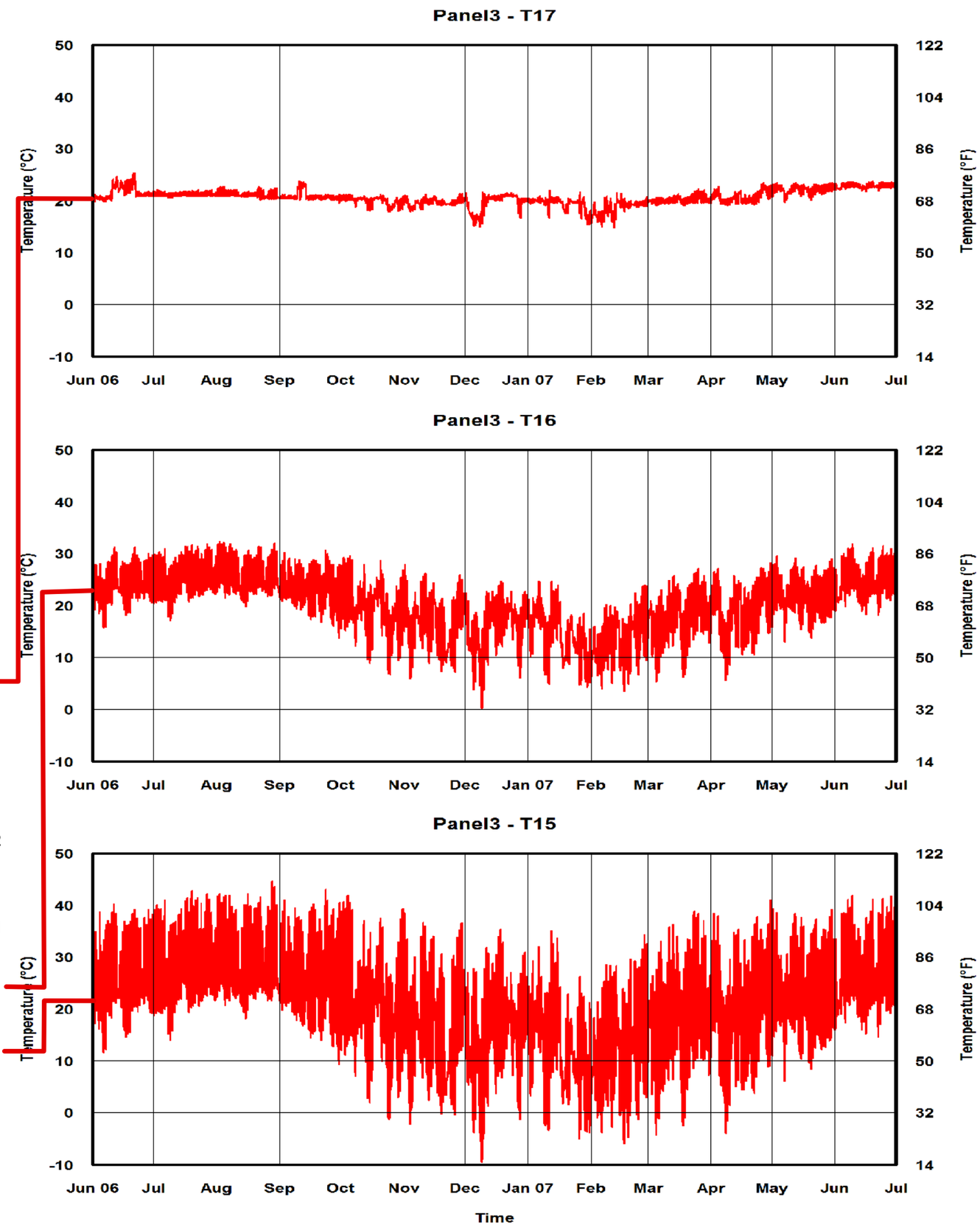
Panel3 - T17
Panel3 - T16
Panel3 - T15
Temperature (°C)
Temperature (°F)
50
40
30
20
10
0
-10
122
104
86
68
50
32
14
Jun 06
Jul
Aug
Sep
Oct
Nov
Dec
Jan 07
Feb
Mar
Apr
May
Jun
Jul
Time

Panel 3

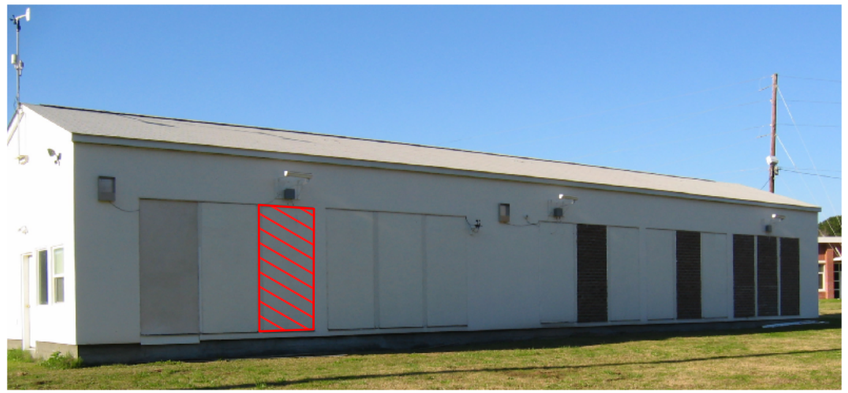

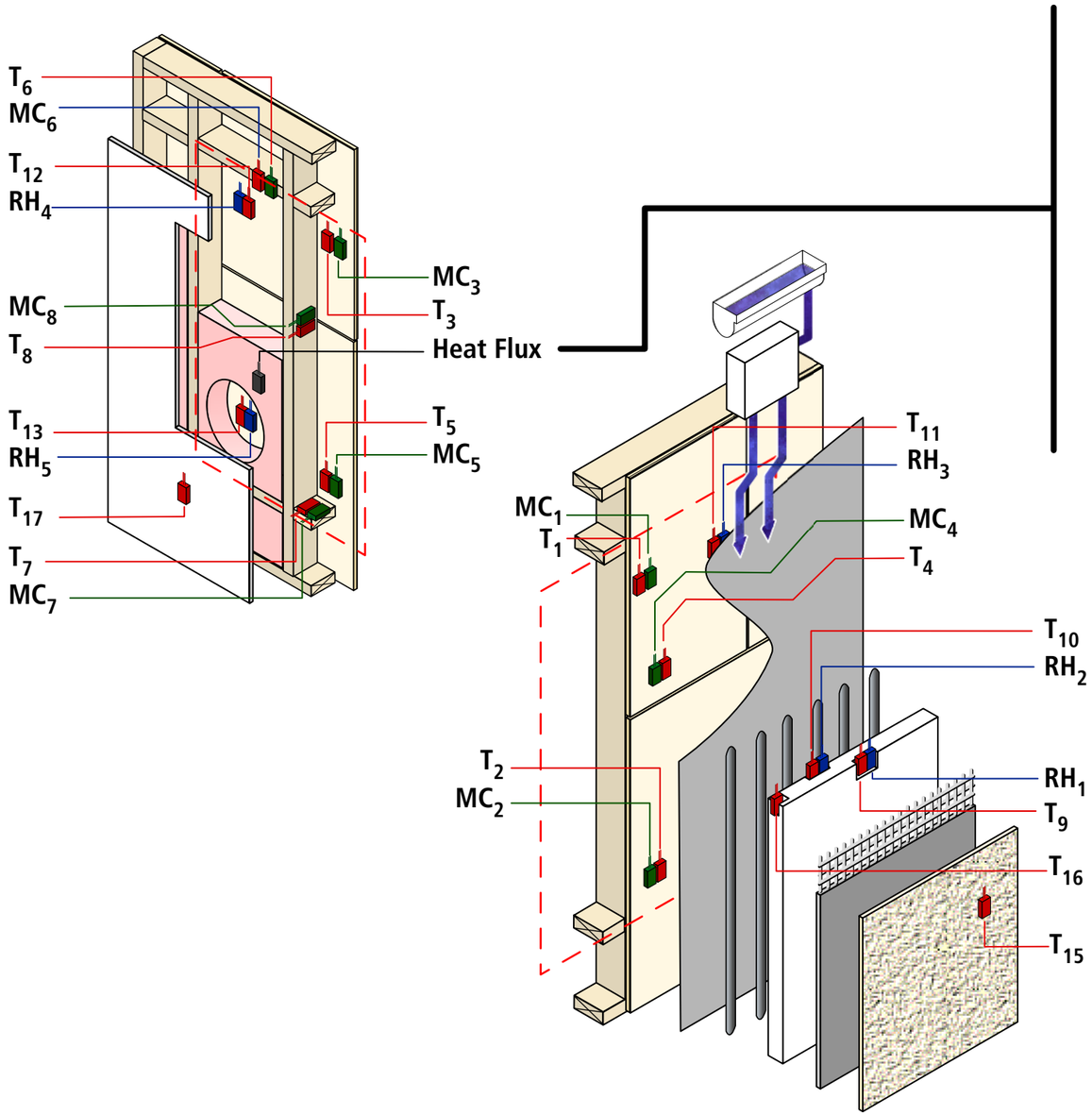
T_6
MC_6
T_{12}
RH_4
MC_8
T_8
T_{13}
RH_5
T_{17}
T_7
MC_7
MC_3
T_3
Heat Flux
T_5
MC_5
T_{11}
RH_3
MC_1
T_1
MC_4
T_4
T_{10}
RH_2
T_2
MC_2
RH_1
T_9
T_{16}
T_{15}

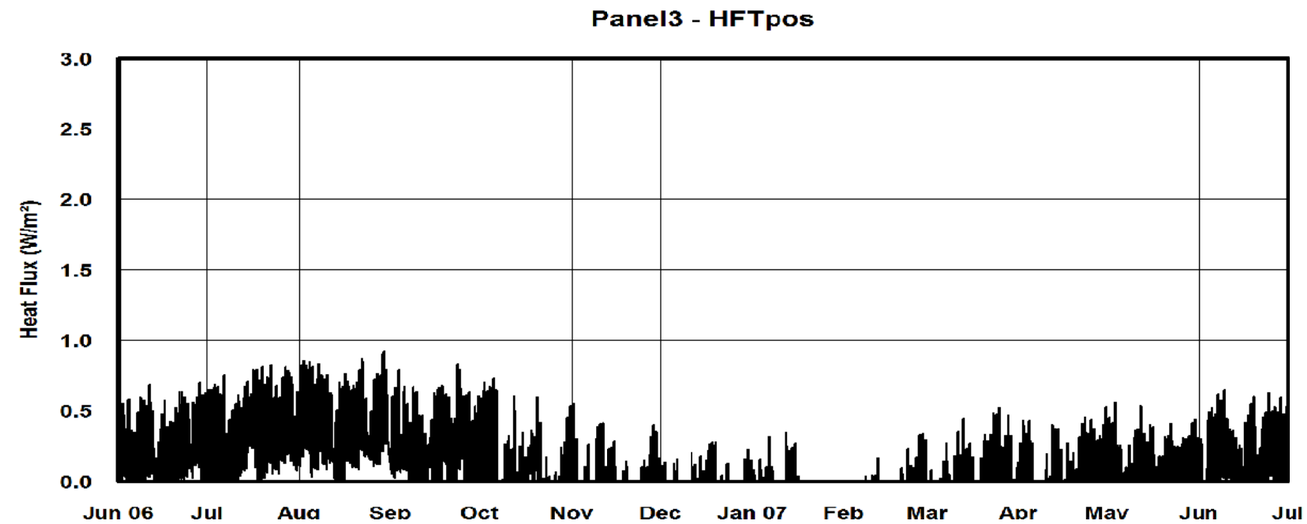
Panel3 - HFTpos
Heat Flux (W/m²)
3.0
2.5
2.0
1.5
1.0
0.5
0.0
Jun 06
Jul
Aug
Sep
Oct
Nov
Dec
Jan 07
Feb
Mar
Apr
May
Jun
Jul

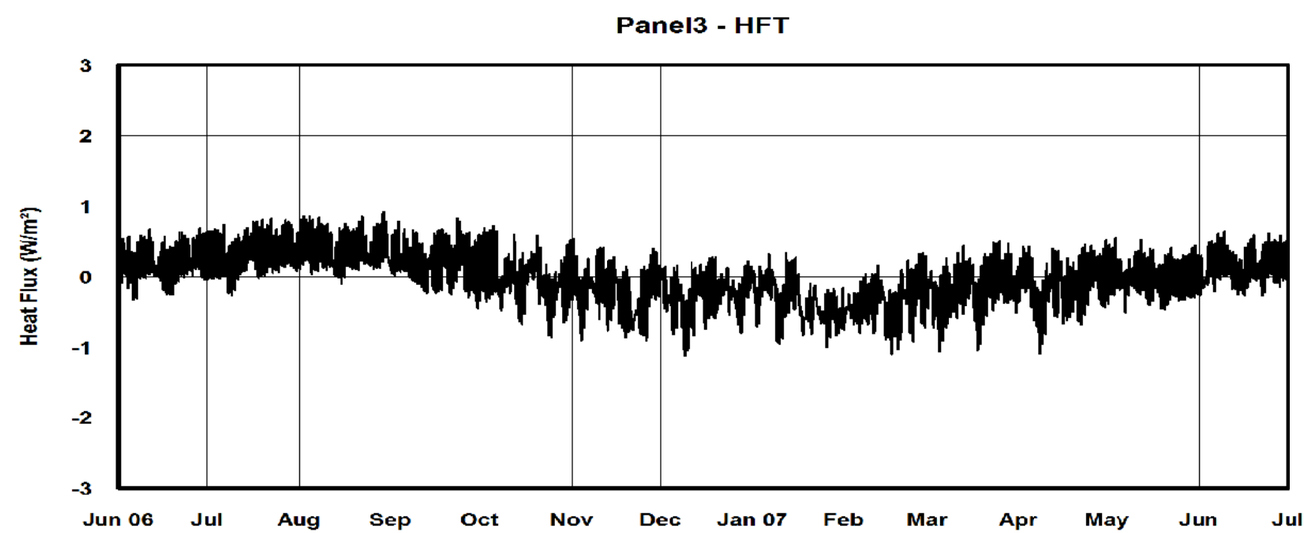
Panel3 - HFT
Heat Flux (W/m²)
3
2
1
0
-1
-2
-3
Jun 06
Jul
Aug
Sep
Oct
Nov
Dec
Jan 07
Feb
Mar
Apr
May
Jun
Jul

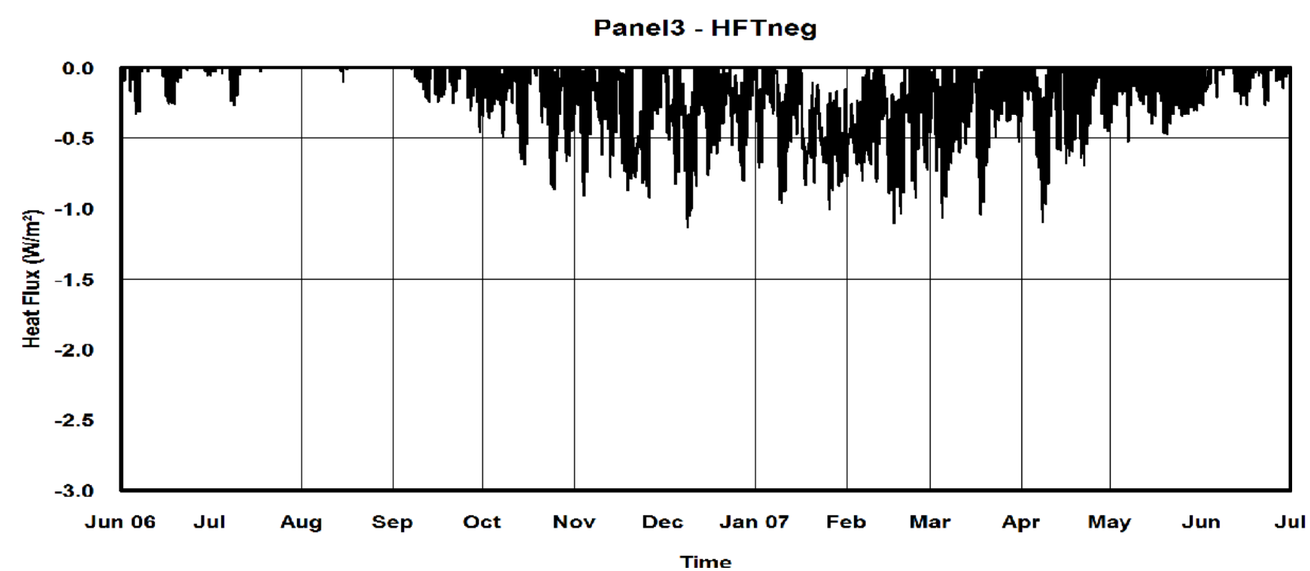
Panel3 - HFTneg
Heat Flux (W/m²)
0.0
-0.5
-1.0
-1.5
-2.0
-2.5
-3.0
Jun 06
Jul
Aug
Sep
Oct
Nov
Dec
Jan 07
Feb
Mar
Apr
May
Jun
Jul
Time

Panel 4

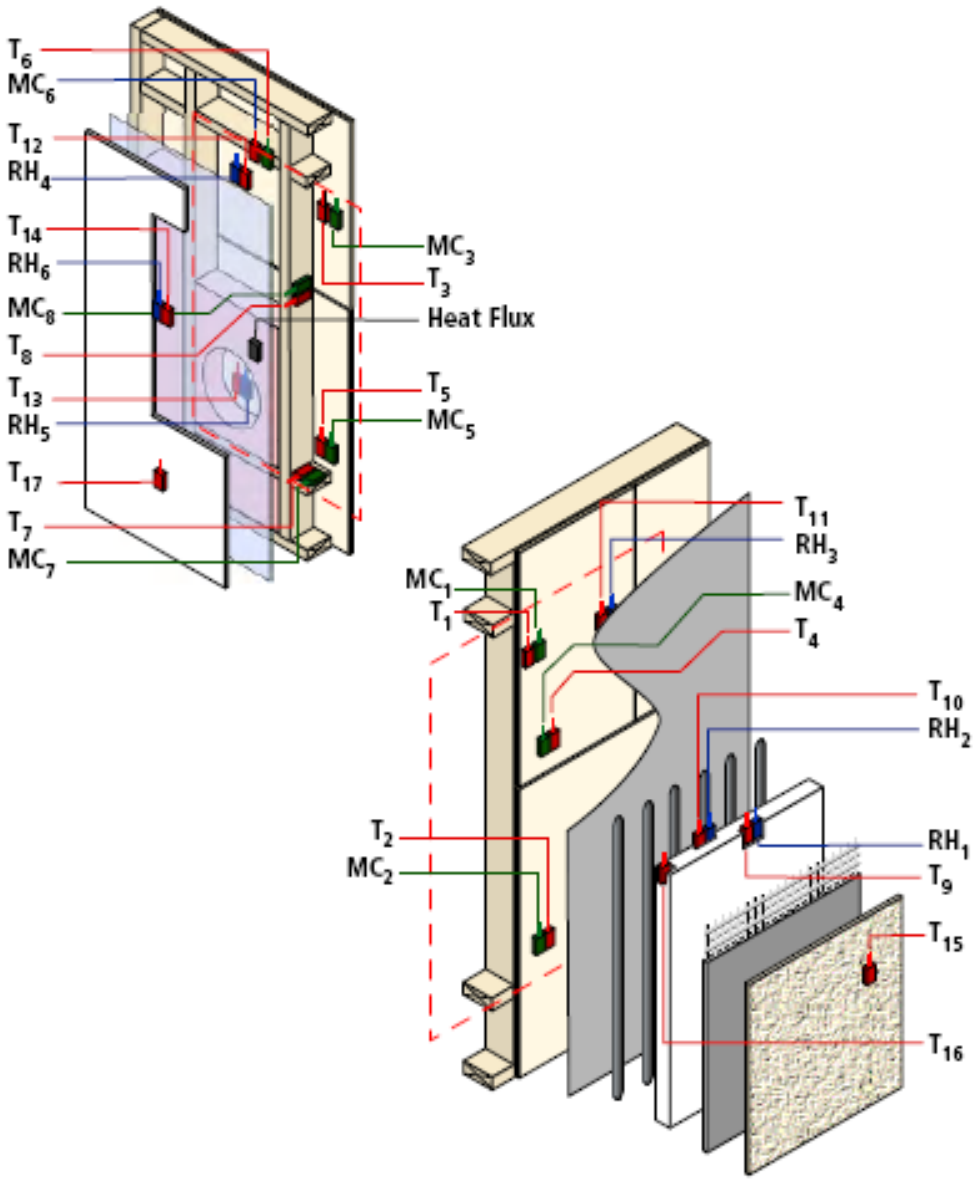
T_6
MC_6
T_{12}
RH_4
T_{14}
RH_6
MC_8
T_8
T_{13}
RH_5
T_{17}
T_7
MC_7
MC_3
T_3
Heat Flux
T_5
MC_5
T_{11}
RH_3
MC_1
T_1
MC_4
T_4
T_{10}
RH_2
T_2
MC_2
RH_1
T_9
T_{15}
T_{16}

Panel 4

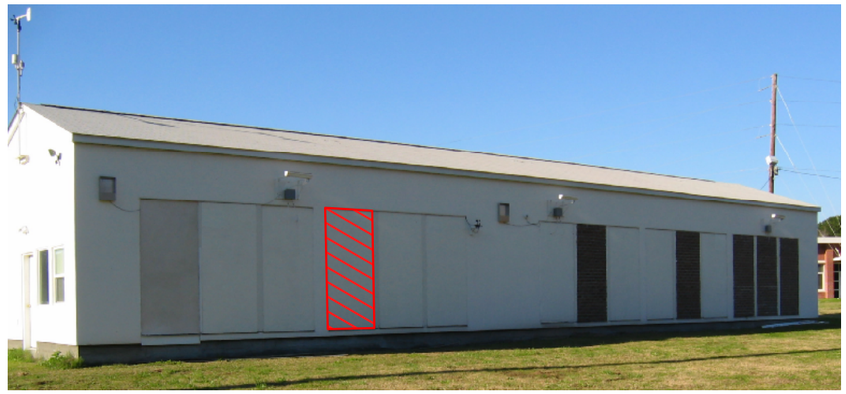

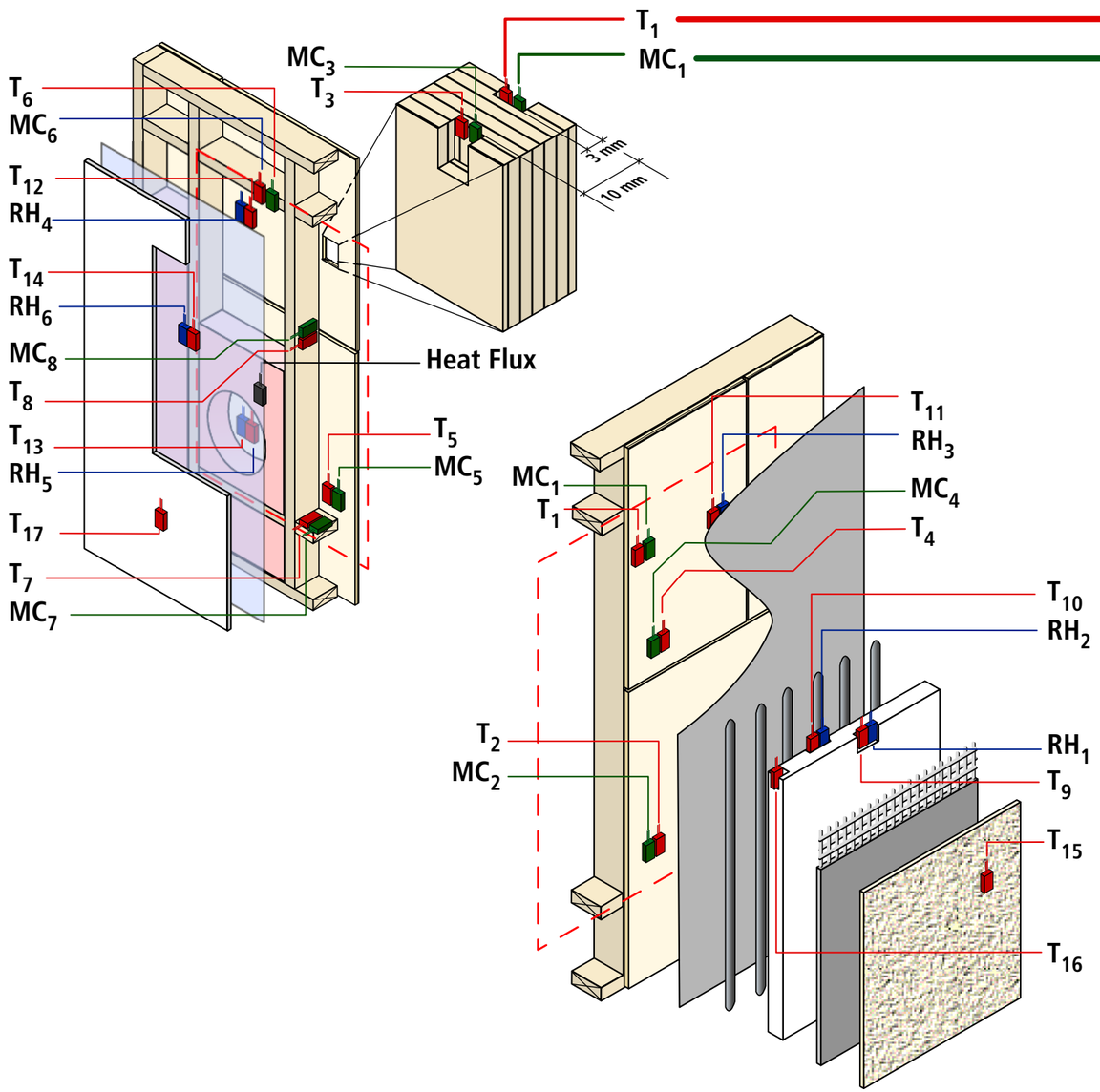
T1
MC1
MC3
T3
T6
MC6
T12
RH4
T14
RH6
MC8
T8
T13
RH5
T17
T7
MC7
3 mm
10 mm
Heat Flux
T5
MC5
T11
RH3
MC4
T4
T10
RH2
RH1
T9
T15
T16
T2
MC2

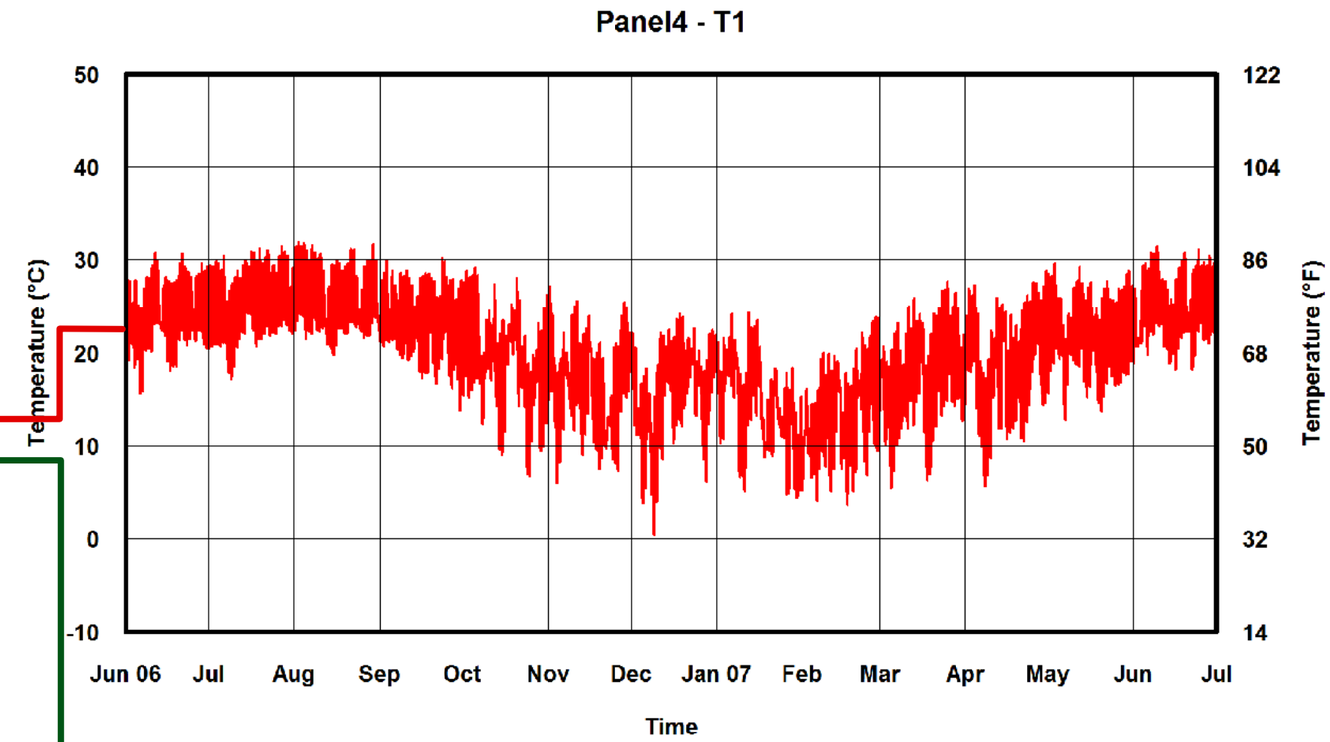
Panel4 - T1
Temperature (°C)
Temperature (°F)
50
40
30
20
10
0
-10
122
104
86
68
50
32
14
Jun 06
Jul
Aug
Sep
Oct
Nov
Dec
Jan 07
Feb
Mar
Apr
May
Jun
Jul
Time

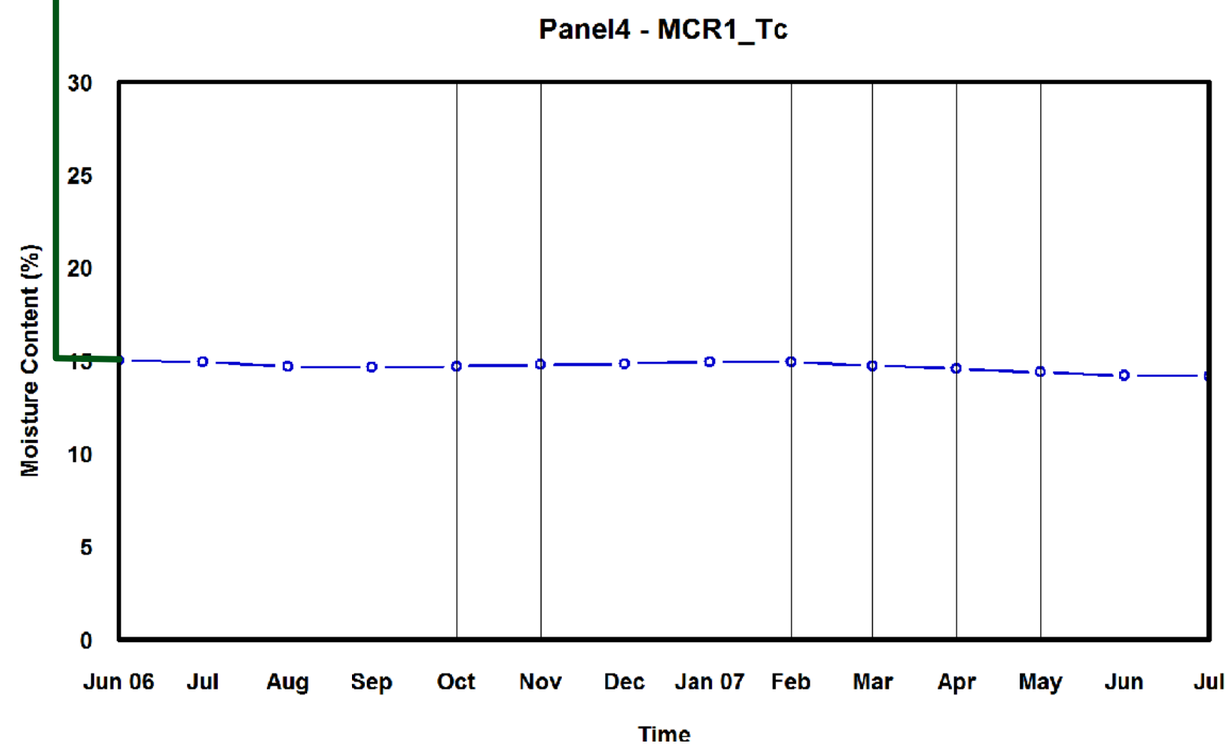
Panel4 - MCR1_Tc
Moisture Content (%)
30
25
20
15
10
5
0
Jun 06
Jul
Aug
Sep
Oct
Nov
Dec
Jan 07
Feb
Mar
Apr
May
Jun
Jul
Time

Panel 4

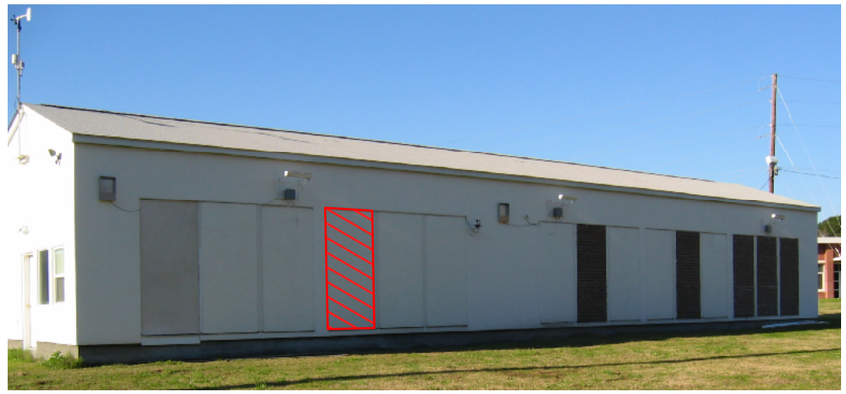

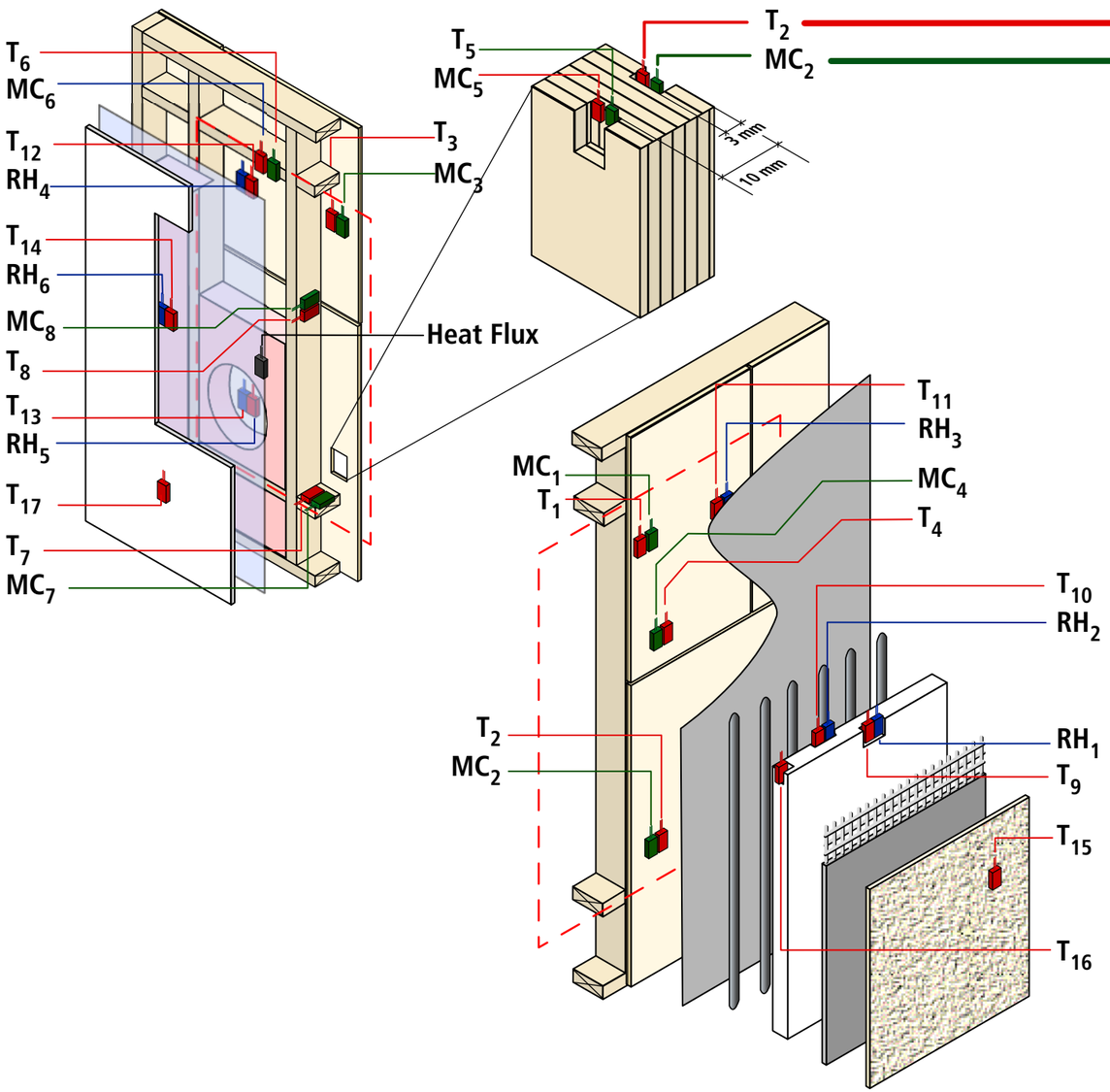
T6
MC6
T12
RH4
T14
RH6
MC8
T8
T13
RH5
T17
T7
MC7
T5
MC5
T2
MC2
T3
MC3
3 mm
10 mm
Heat Flux
MC1
T1
T11
RH3
MC4
T4
T10
RH2
T2
MC2
RH1
T9
T15
T16

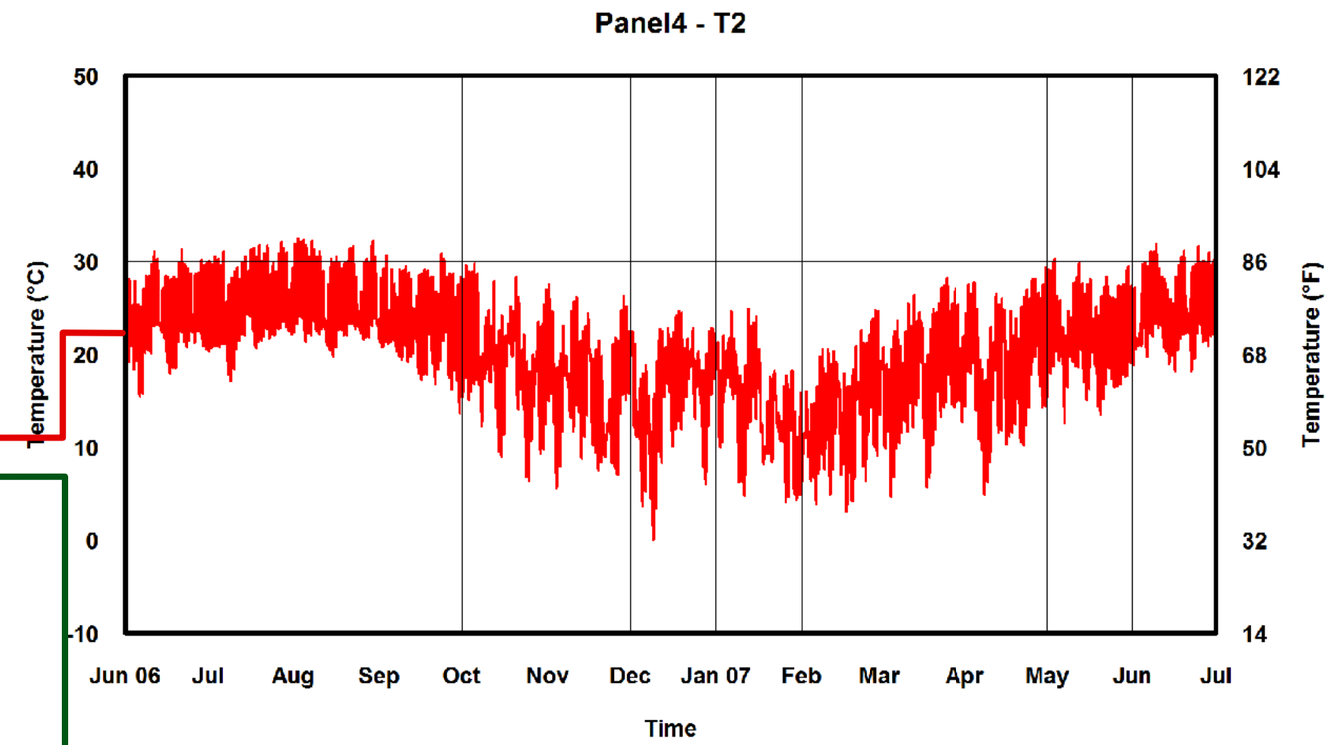
Panel4 - T2
Temperature (°C)
Temperature (°F)
50
40
30
20
10
0
-10
122
104
86
68
50
32
14
Jun 06
Jul
Aug
Sep
Oct
Nov
Dec
Jan 07
Feb
Mar
Apr
May
Jun
Jul
Time

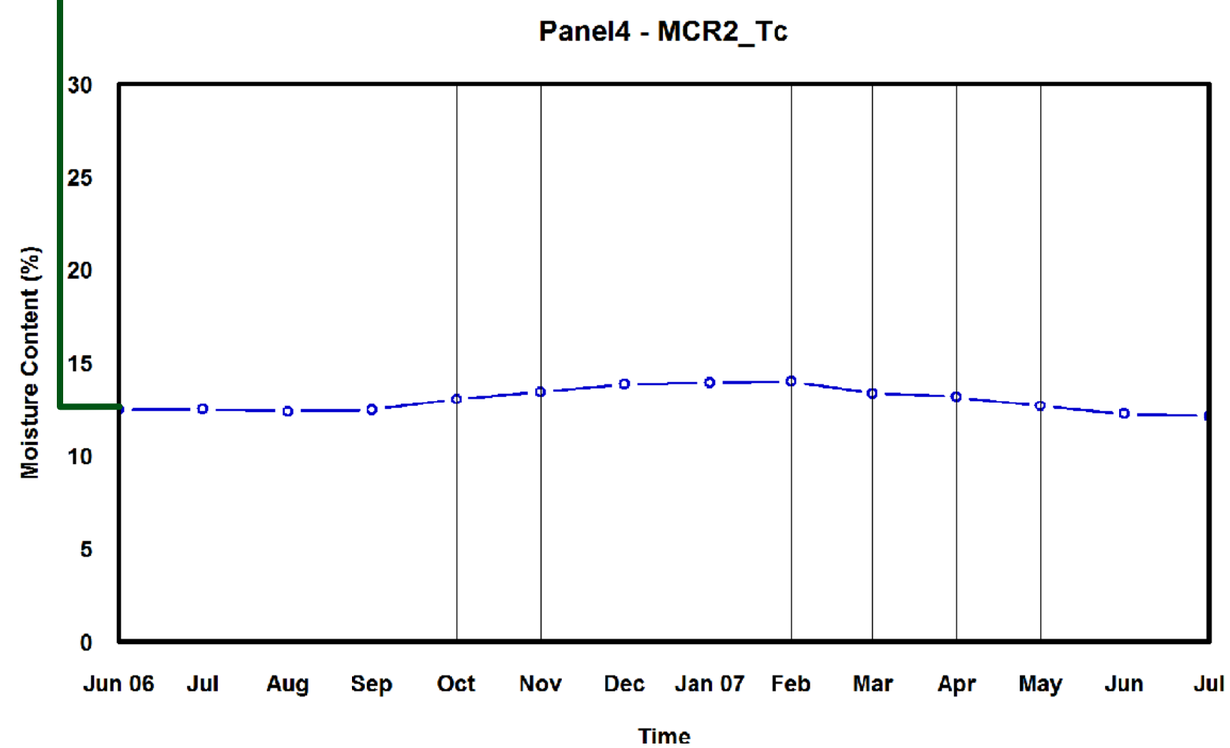
Panel4 - MCR2_Tc
Moisture Content (%)
30
25
20
15
10
5
0
Jun 06
Jul
Aug
Sep
Oct
Nov
Dec
Jan 07
Feb
Mar
Apr
May
Jun
Jul
Time

Panel 4

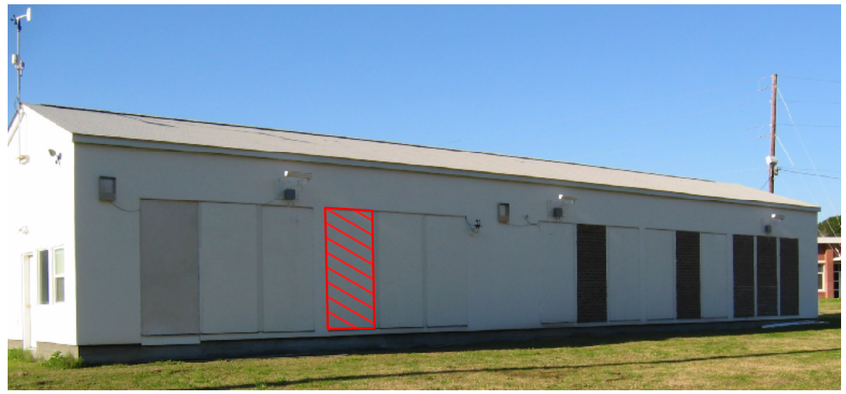

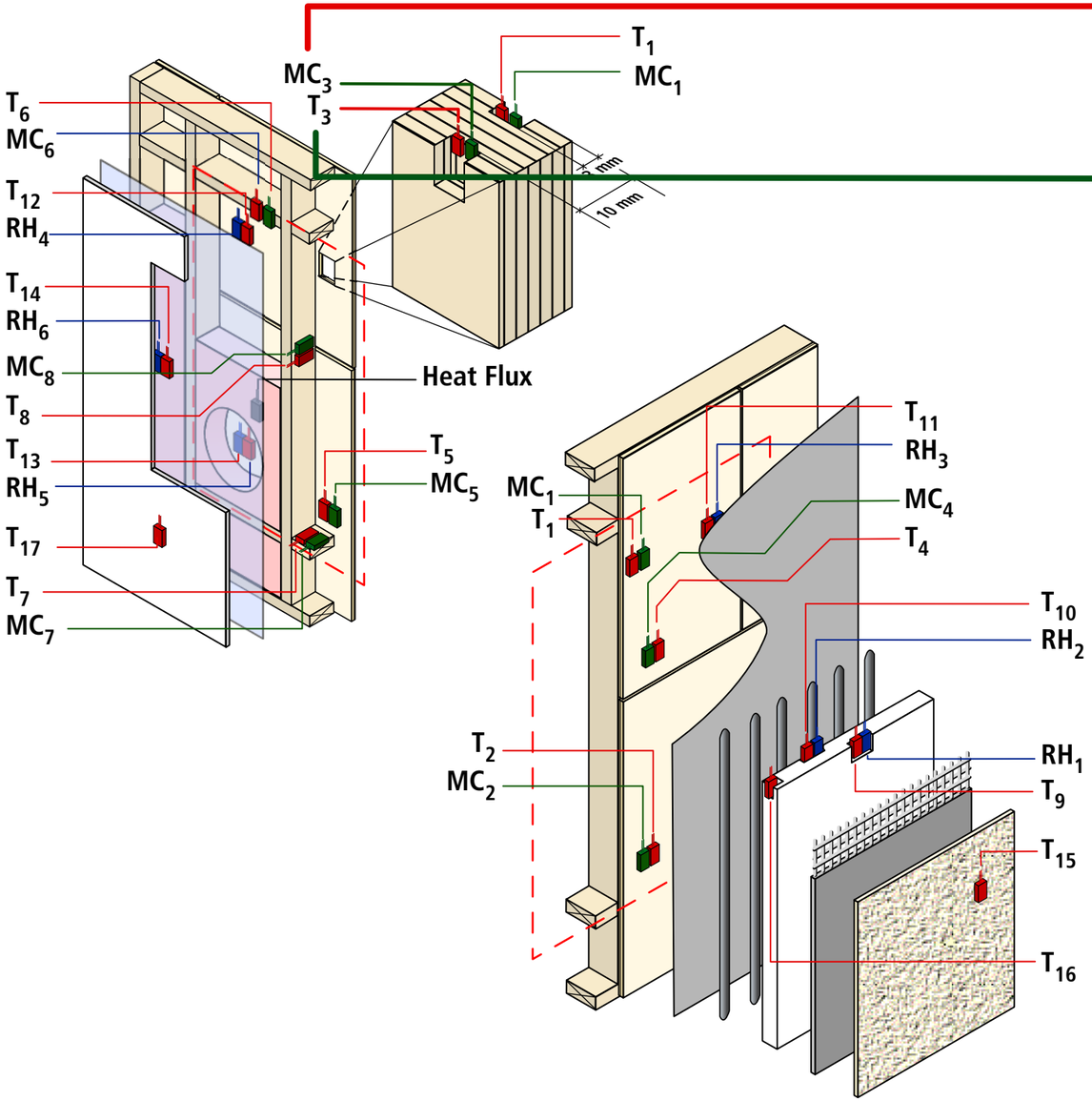
T_6
MC_6
T_{12}
RH_4
T_{14}
RH_6
MC_8
T_8
T_{13}
RH_5
T_{17}
T_7
MC_7
MC_3
T_3
T_1
MC_1
3 mm
10 mm
Heat Flux
T_5
MC_5
MC_1
T_1
T_{11}
RH_3
MC_4
T_4
T_{10}
RH_2
T_2
MC_2
RH_1
T_9
T_{15}
T_{16}

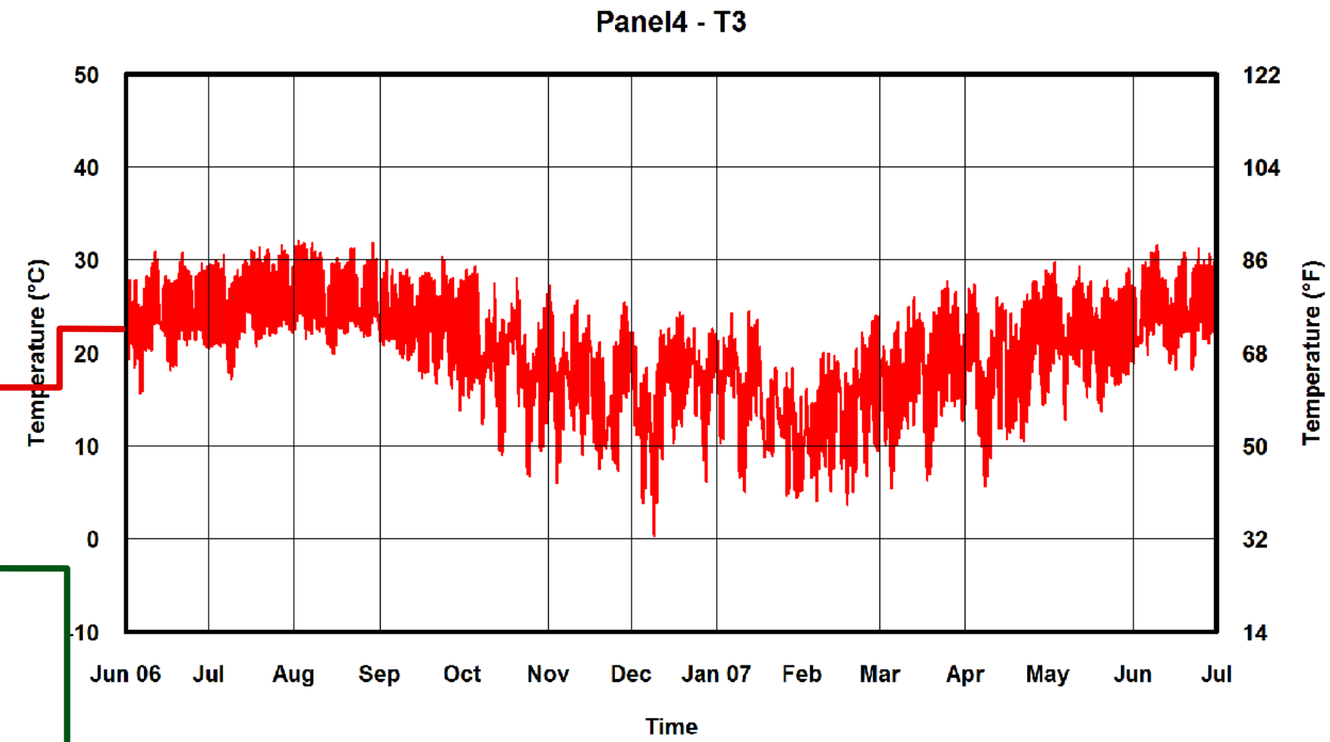
Panel4 - T3
Temperature (°C)
50
40
30
20
10
0
-10
Temperature (°F)
122
104
86
68
50
32
14
Jun 06
Jul
Aug
Sep
Oct
Nov
Dec
Jan 07
Feb
Mar
Apr
May
Jun
Jul
Time

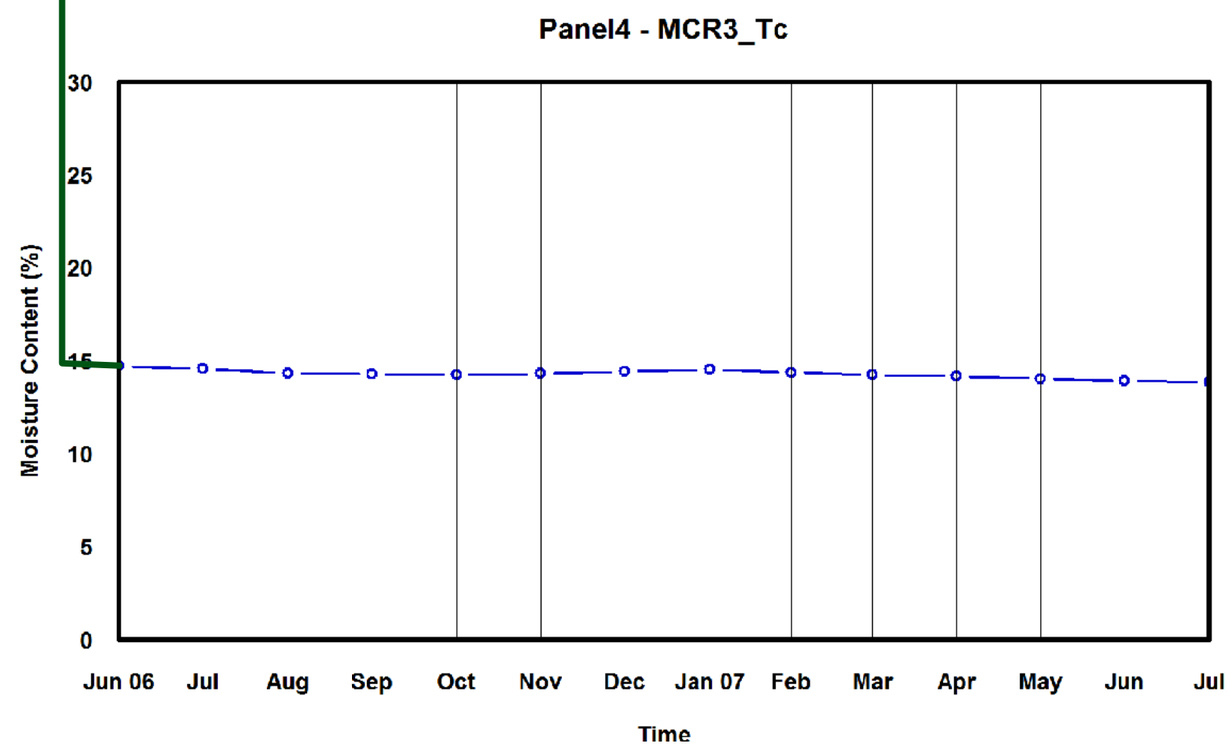
Panel4 - MCR3_Tc
Moisture Content (%)
30
25
20
15
10
5
0
Jun 06
Jul
Aug
Sep
Oct
Nov
Dec
Jan 07
Feb
Mar
Apr
May
Jun
Jul
Time

Panel 4

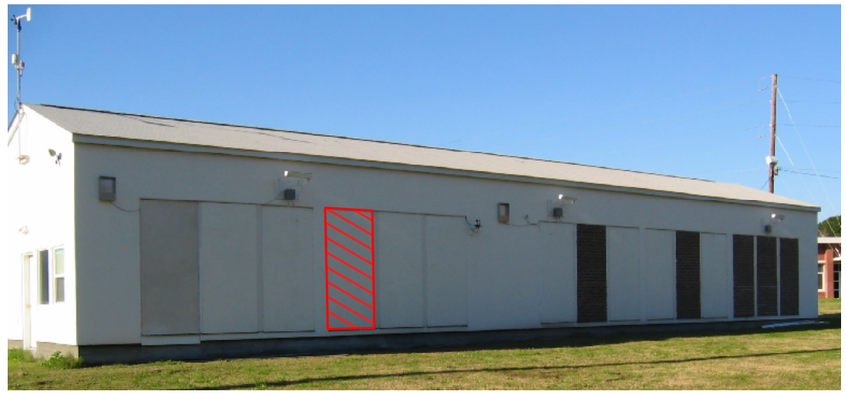

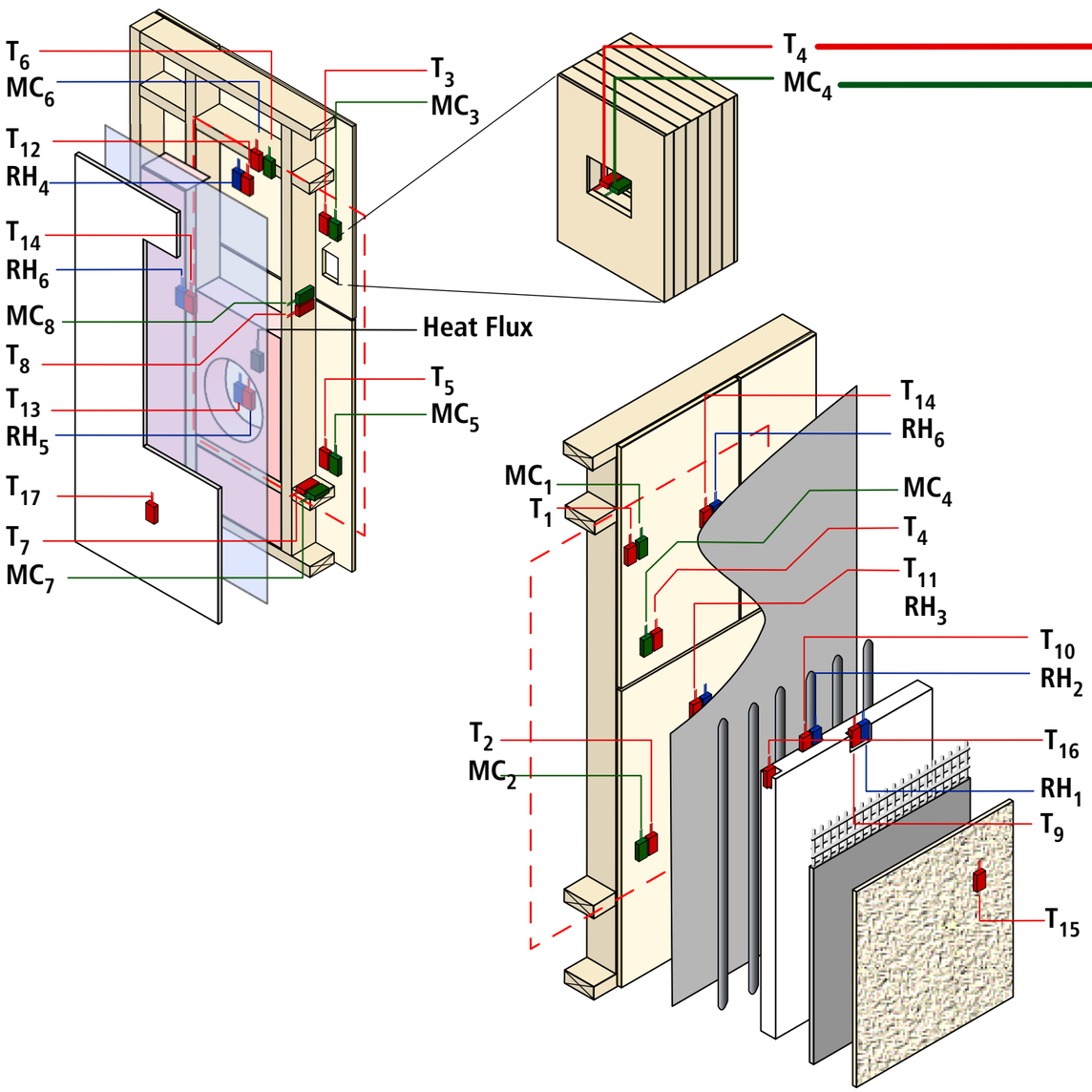
T_6
MC_6
T_{12}
RH_4
T_{14}
RH_6
MC_8
T_8
T_{13}
RH_5
T_{17}
T_7
MC_7
T_3
MC_3
Heat Flux
T_5
MC_5
T_4
MC_4
T_{14}
RH_6
MC_1
T_1
MC_4
T_4
T_{11}
RH_3
T_{10}
RH_2
T_2
MC_2
T_{16}
RH_1
T_9
T_{15}

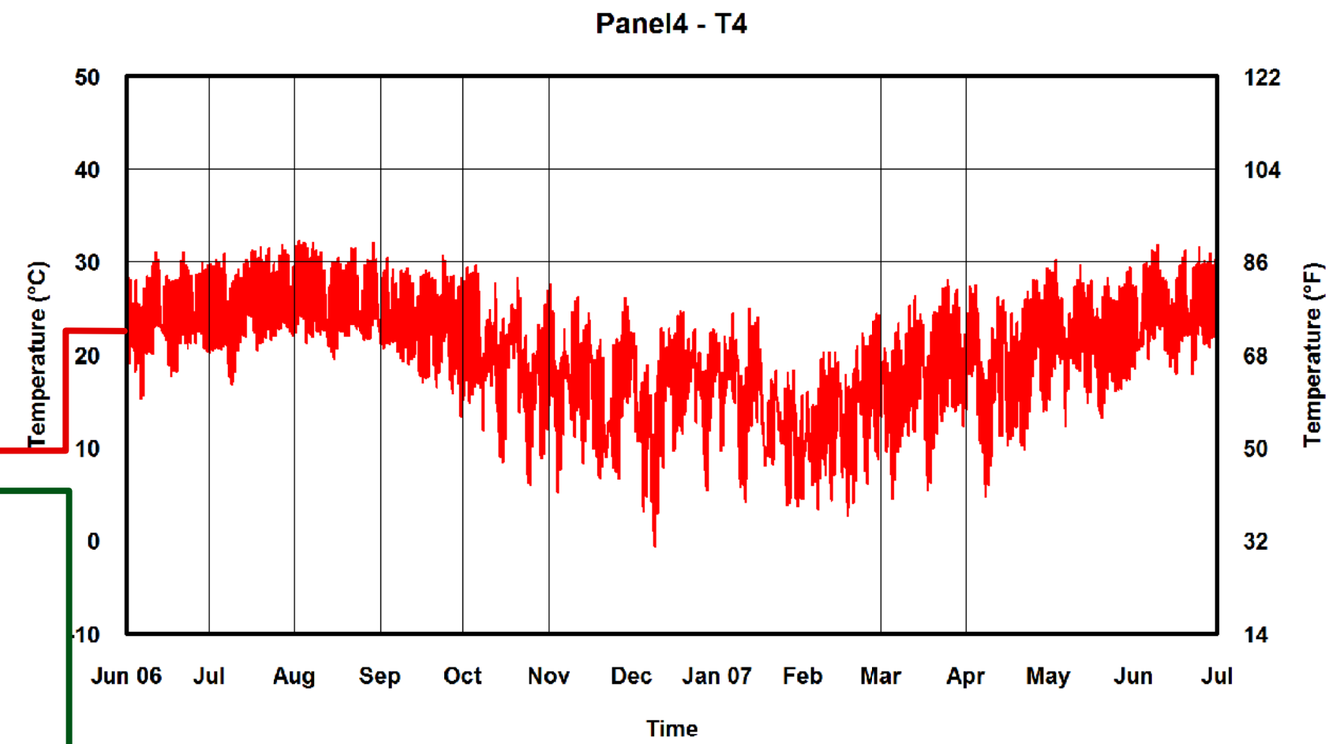
Panel4 - T4
Temperature (°C)
50
40
30
20
10
0
-10
Temperature (°F)
122
104
86
68
50
32
14
Jun 06
Jul
Aug
Sep
Oct
Nov
Dec
Jan 07
Feb
Mar
Apr
May
Jun
Jul
Time

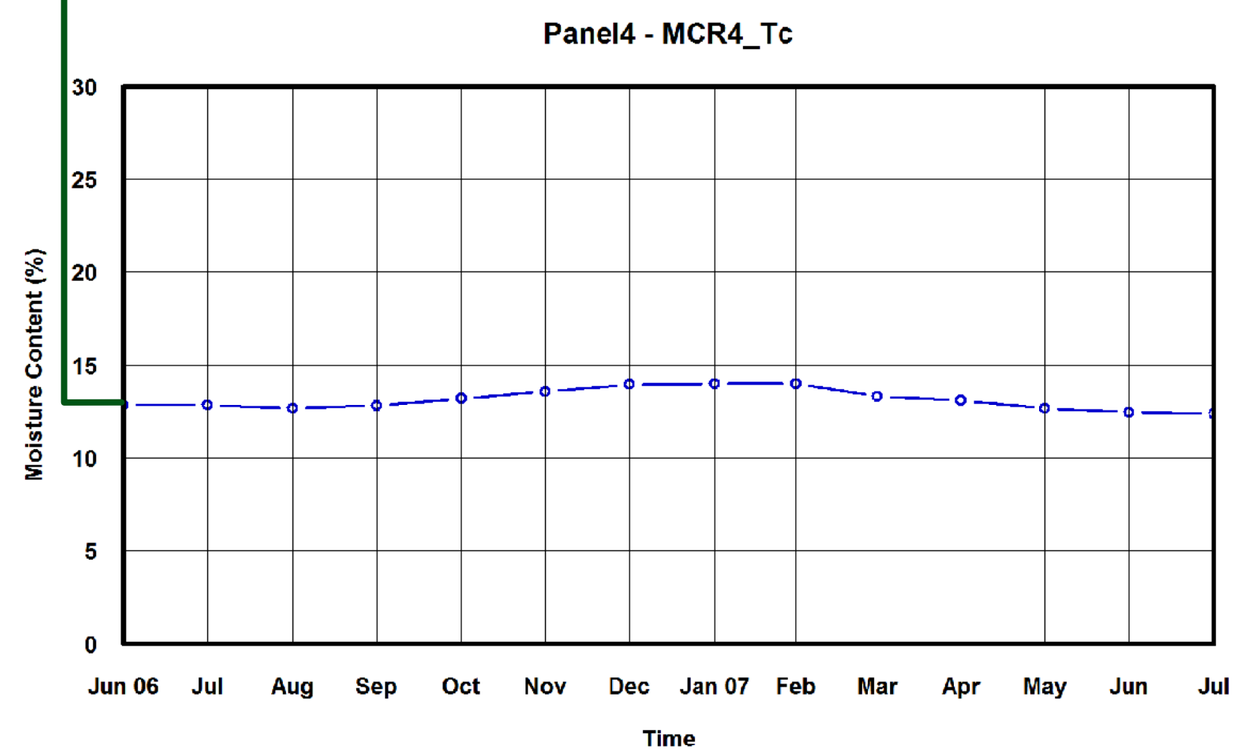
Panel4 - MCR4_Tc
Moisture Content (%)
30
25
20
15
10
5
0
Jun 06
Jul
Aug
Sep
Oct
Nov
Dec
Jan 07
Feb
Mar
Apr
May
Jun
Jul
Time

Panel 4

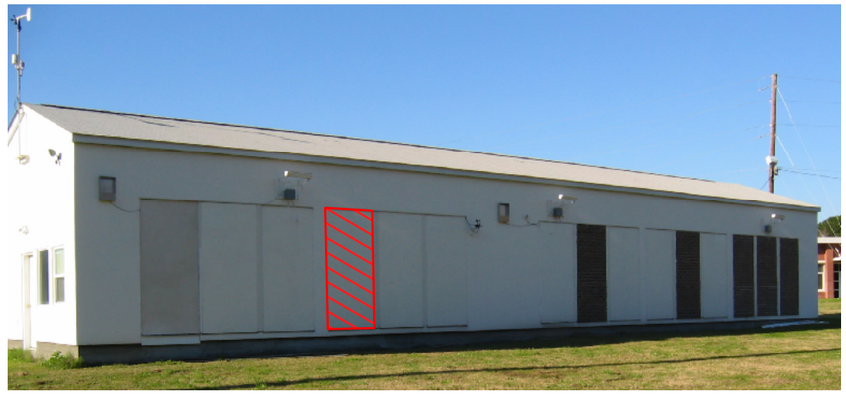

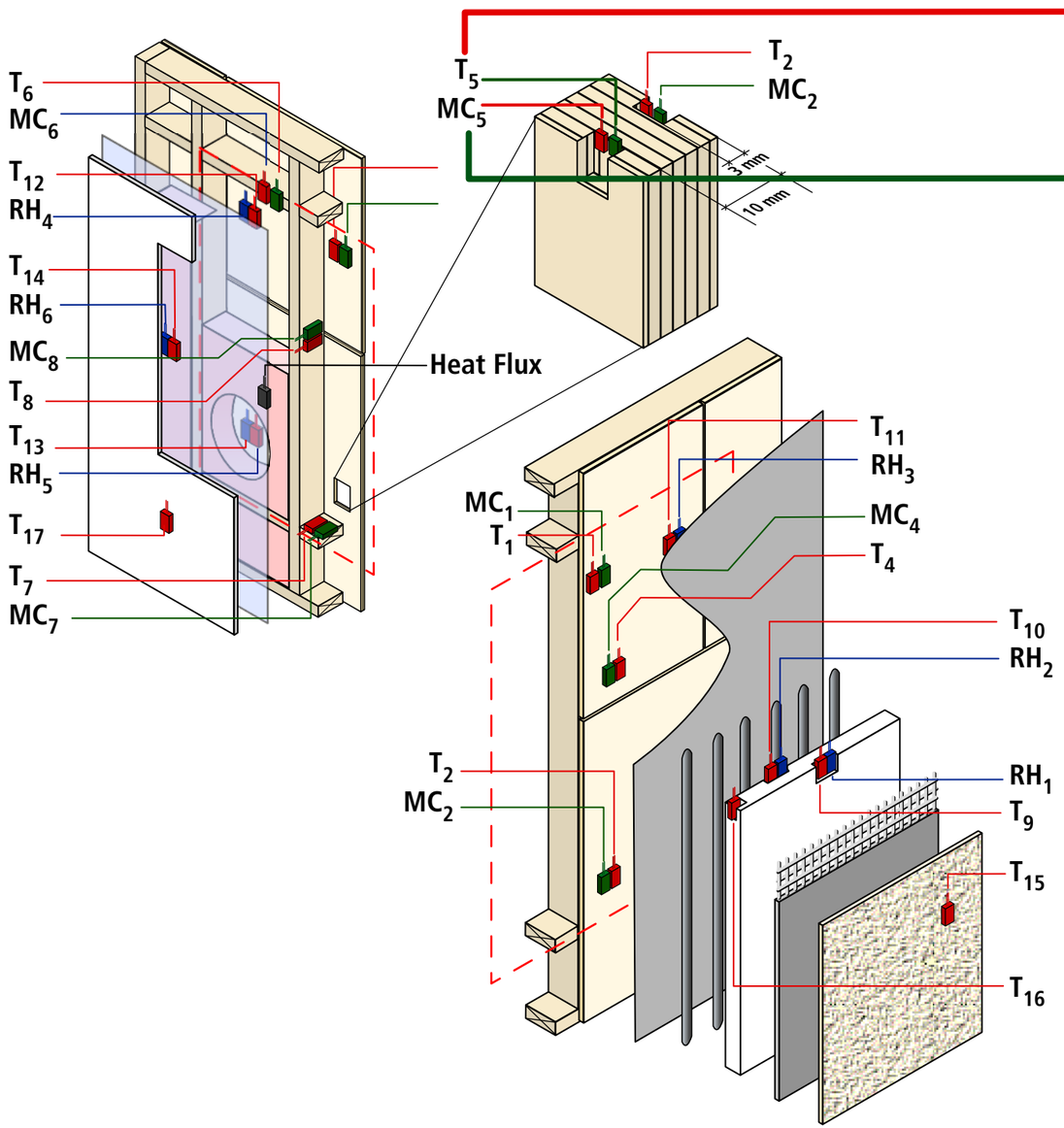
T_6
MC_6
T_{12}
RH_4
T_{14}
RH_6
MC_8
T_8
T_{13}
RH_5
T_{17}
T_7
MC_7
Heat Flux
T_5
MC_5
T_2
MC_2
3 mm
10 mm
T_{11}
RH_3
MC_4
T_4
MC_1
T_1
T_{10}
RH_2
T_2
MC_2
RH_1
T_9
T_{15}
T_{16}

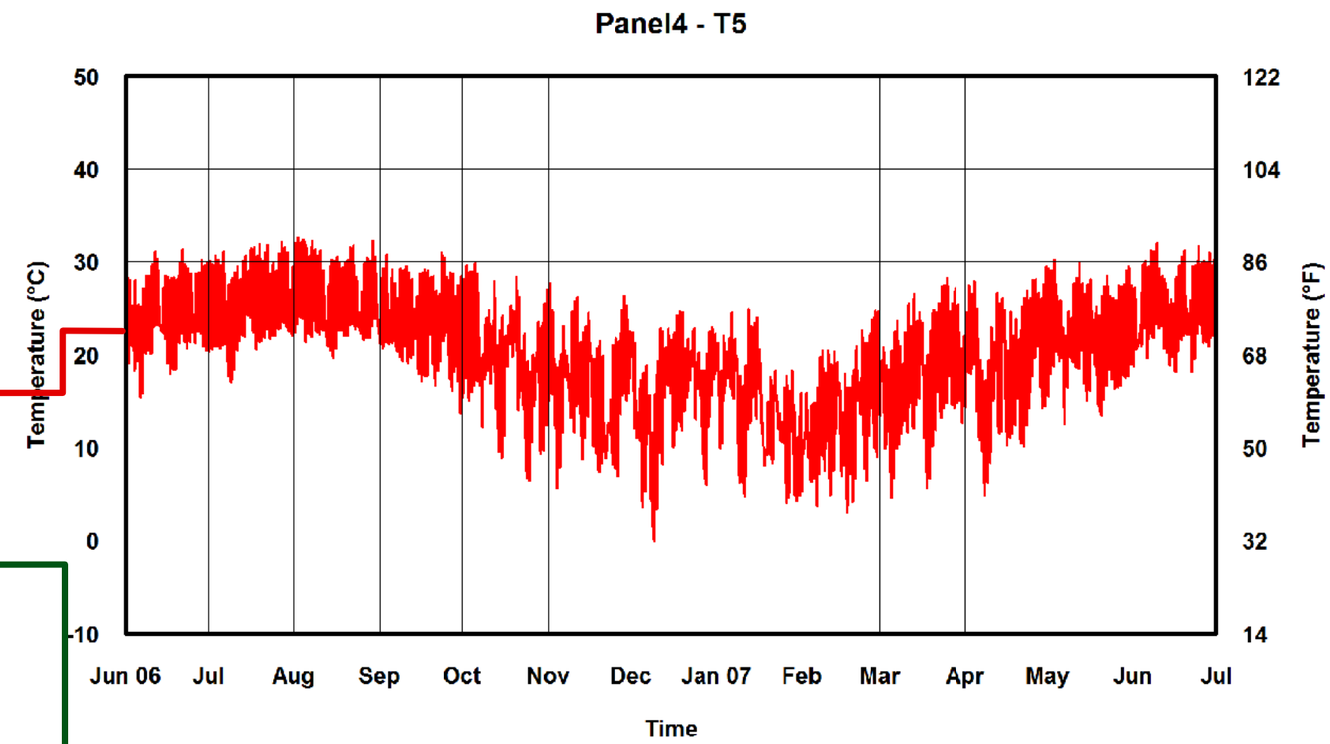
Panel4 - T5
Temperature (°C)
Temperature (°F)
50
40
30
20
10
0
-10
122
104
86
68
50
32
14
Jun 06
Jul
Aug
Sep
Oct
Nov
Dec
Jan 07
Feb
Mar
Apr
May
Jun
Jul
Time

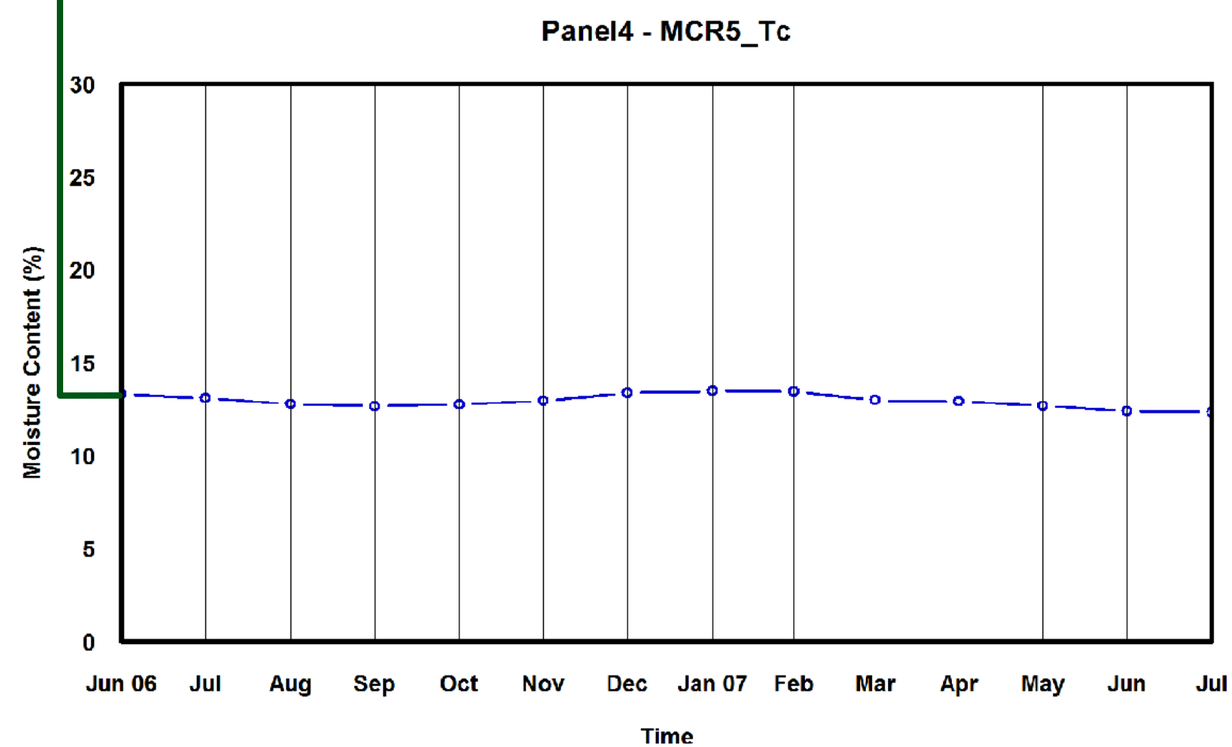
Panel4 - MCR5_Tc
Moisture Content (%)
30
25
20
15
10
5
0
Jun 06
Jul
Aug
Sep
Oct
Nov
Dec
Jan 07
Feb
Mar
Apr
May
Jun
Jul
Time

Panel 4

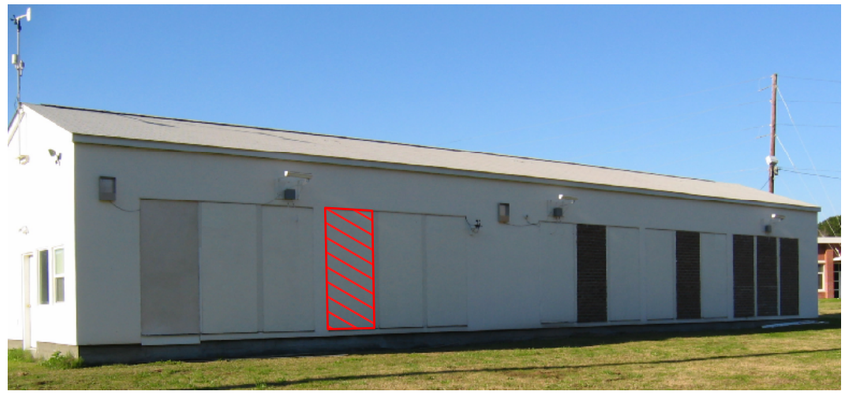

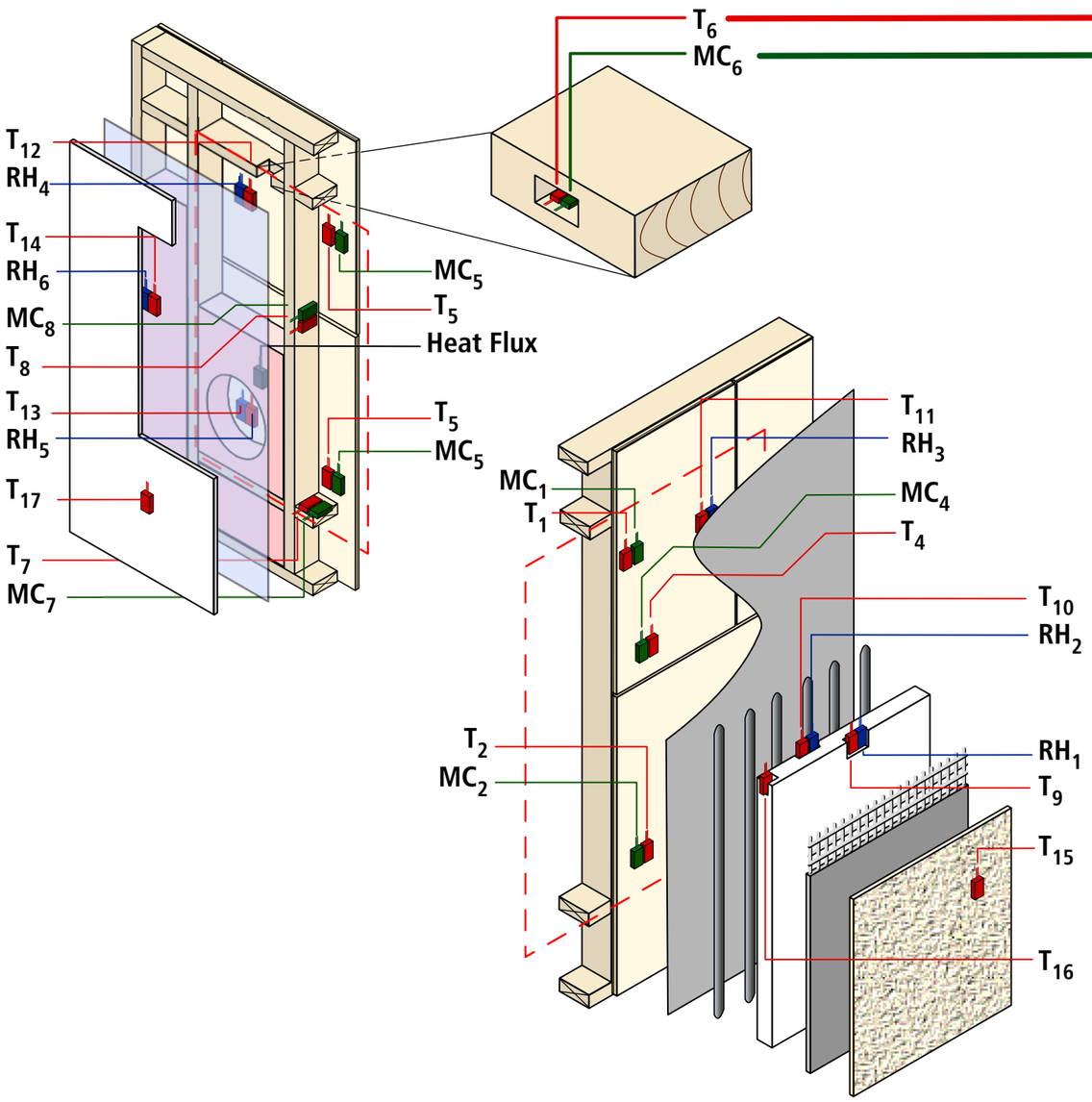
T_6
MC_6
T_{12}
RH_4
T_{14}
RH_6
MC_8
T_8
T_{13}
RH_5
T_{17}
T_7
MC_7
MC_5
T_5
Heat Flux
T_5
MC_5
T_{11}
RH_3
MC_4
T_4
MC_1
T_1
T_{10}
RH_2
T_2
MC_2
RH_1
T_9
T_{15}
T_{16}

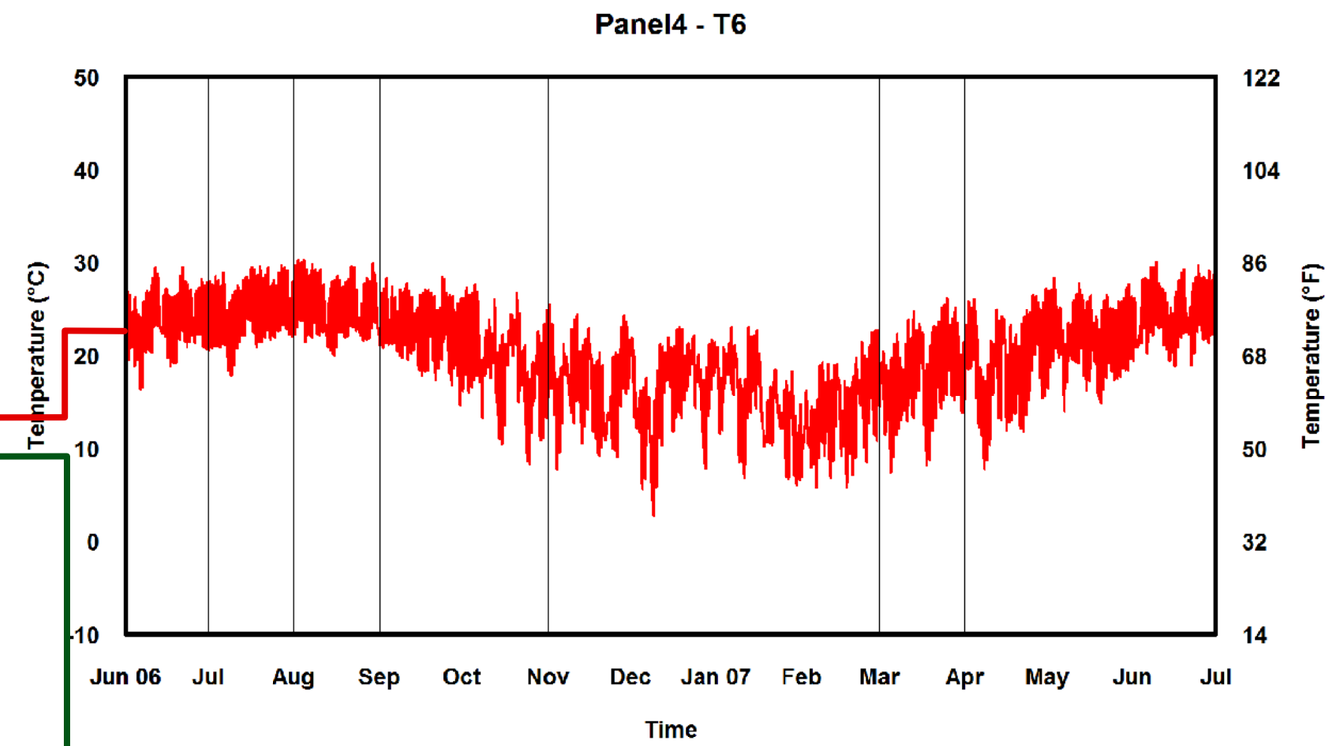
Panel4 - T6
Temperature (°C)
50
40
30
20
10
0
-10
Temperature (°F)
122
104
86
68
50
32
14
Jun 06
Jul
Aug
Sep
Oct
Nov
Dec
Jan 07
Feb
Mar
Apr
May
Jun
Jul
Time

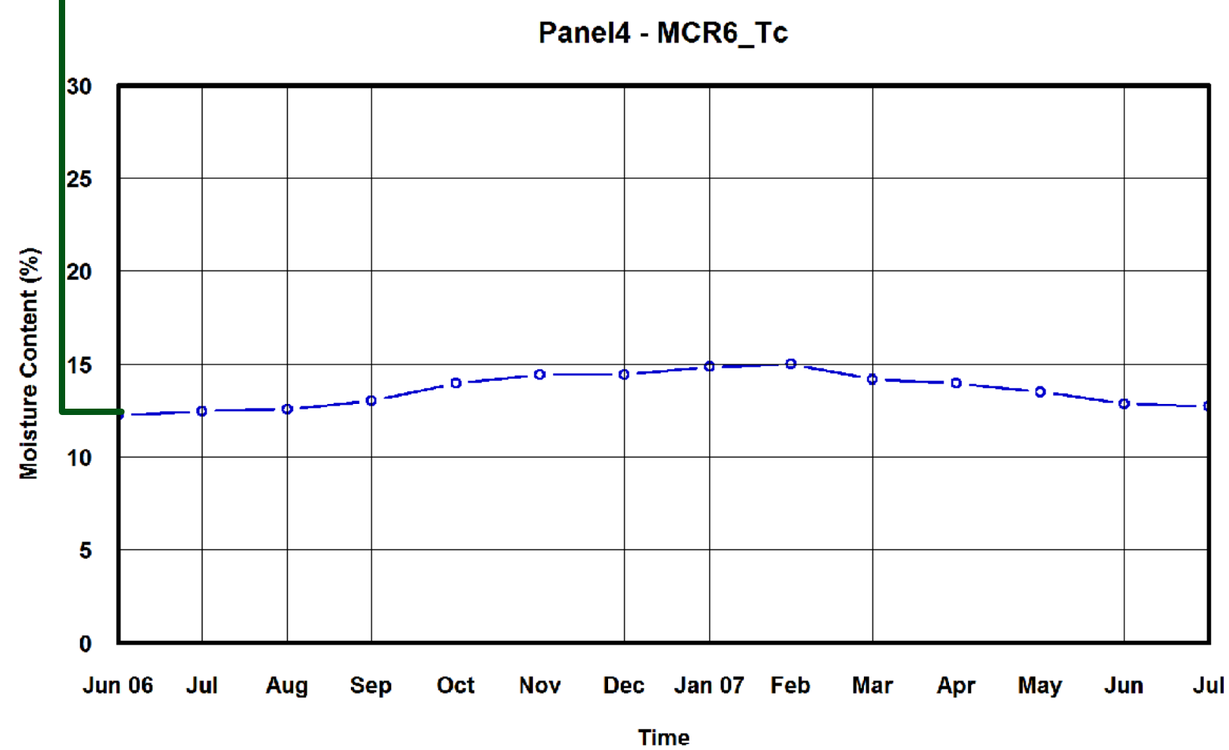
Panel4 - MCR6_Tc
Moisture Content (%)
30
25
20
15
10
5
0
Jun 06
Jul
Aug
Sep
Oct
Nov
Dec
Jan 07
Feb
Mar
Apr
May
Jun
Jul
Time

Panel 4

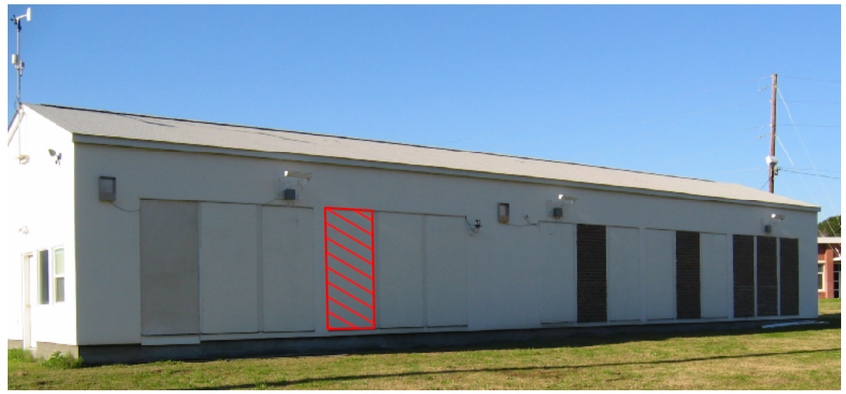

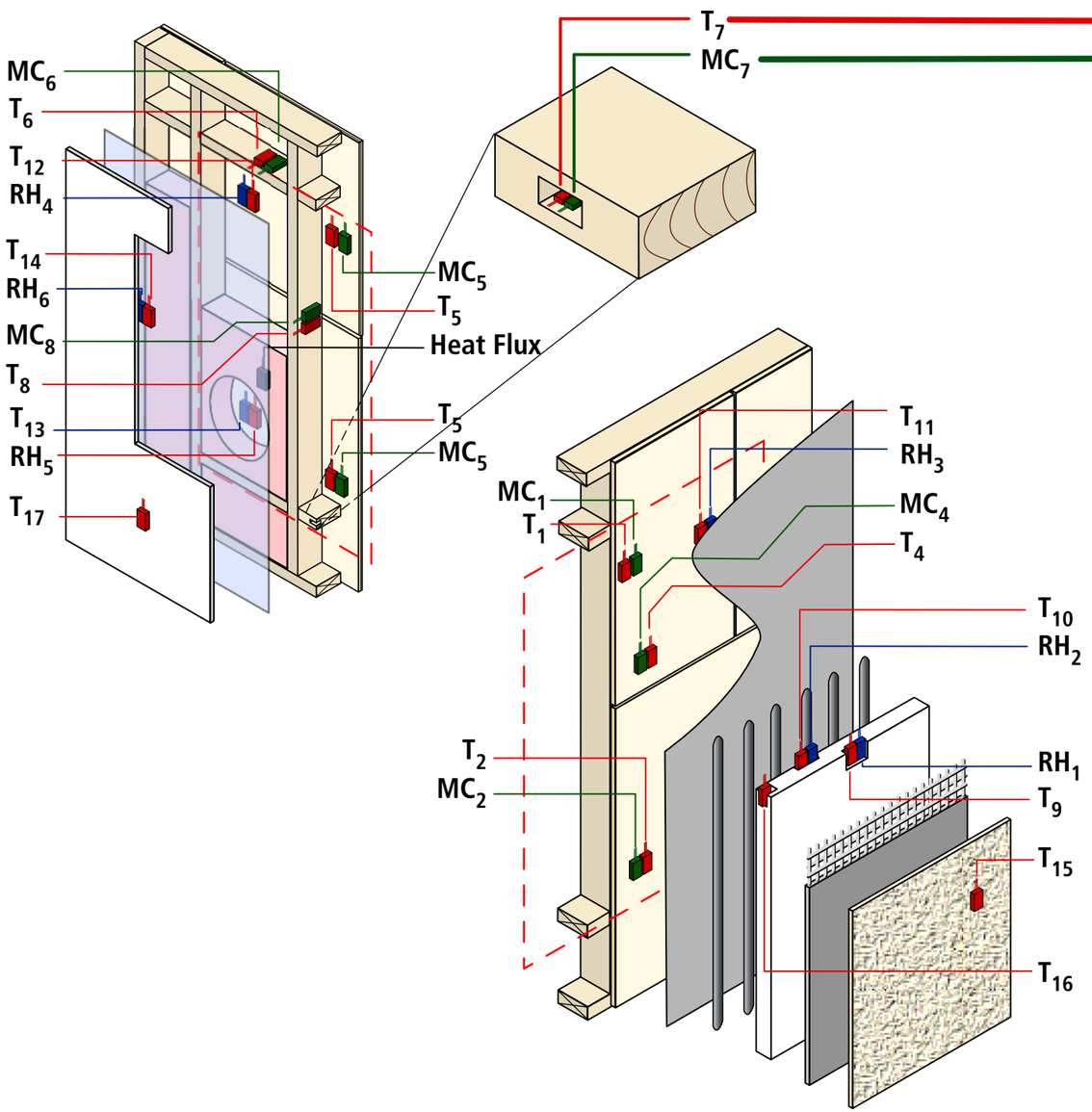
MC6
T6
T12
RH4
T14
RH6
MC8
T8
T13
RH5
T17
T7
MC7
MC5
T5
Heat Flux
T5
MC5
MC1
T1
T11
RH3
MC4
T4
T10
RH2
T2
MC2
RH1
T9
T15
T16

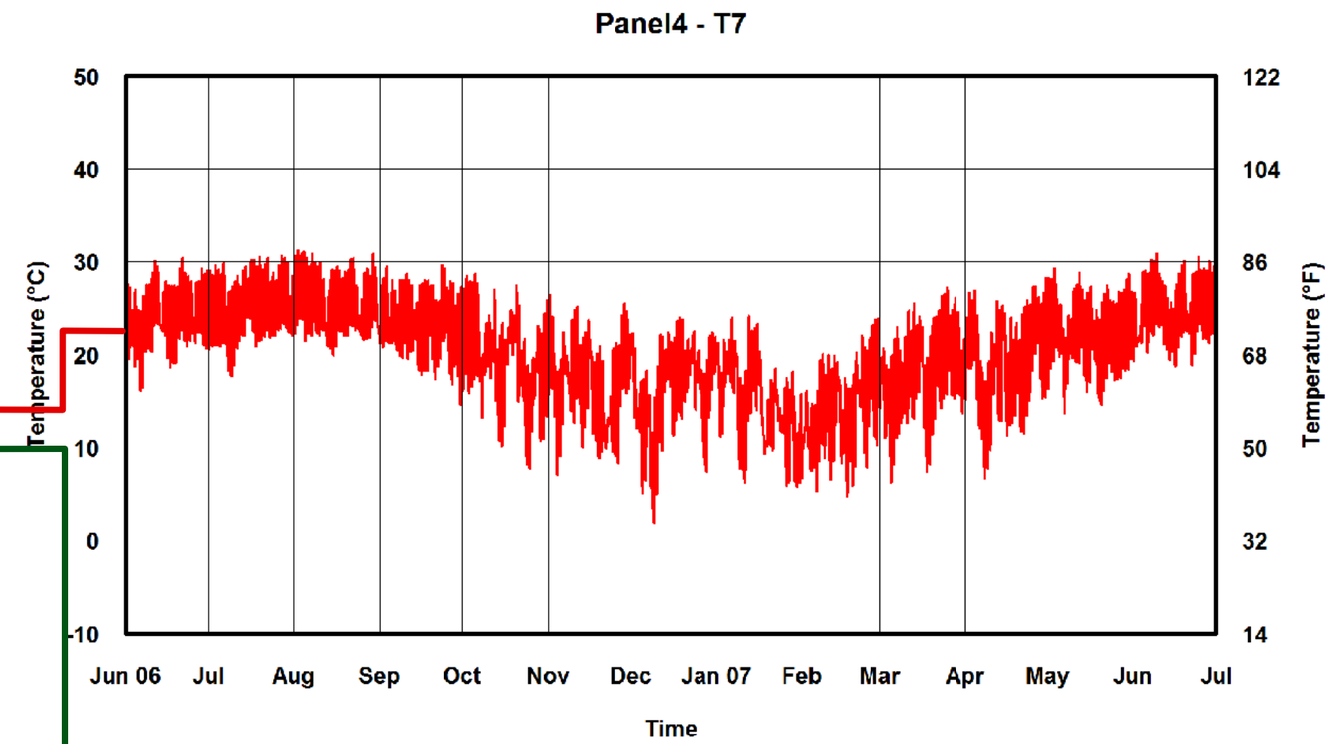
Panel4 - T7
Temperature (°C)
Temperature (°F)
50
40
30
20
10
0
-10
122
104
86
68
50
32
14
Jun 06
Jul
Aug
Sep
Oct
Nov
Dec
Jan 07
Feb
Mar
Apr
May
Jun
Jul
Time

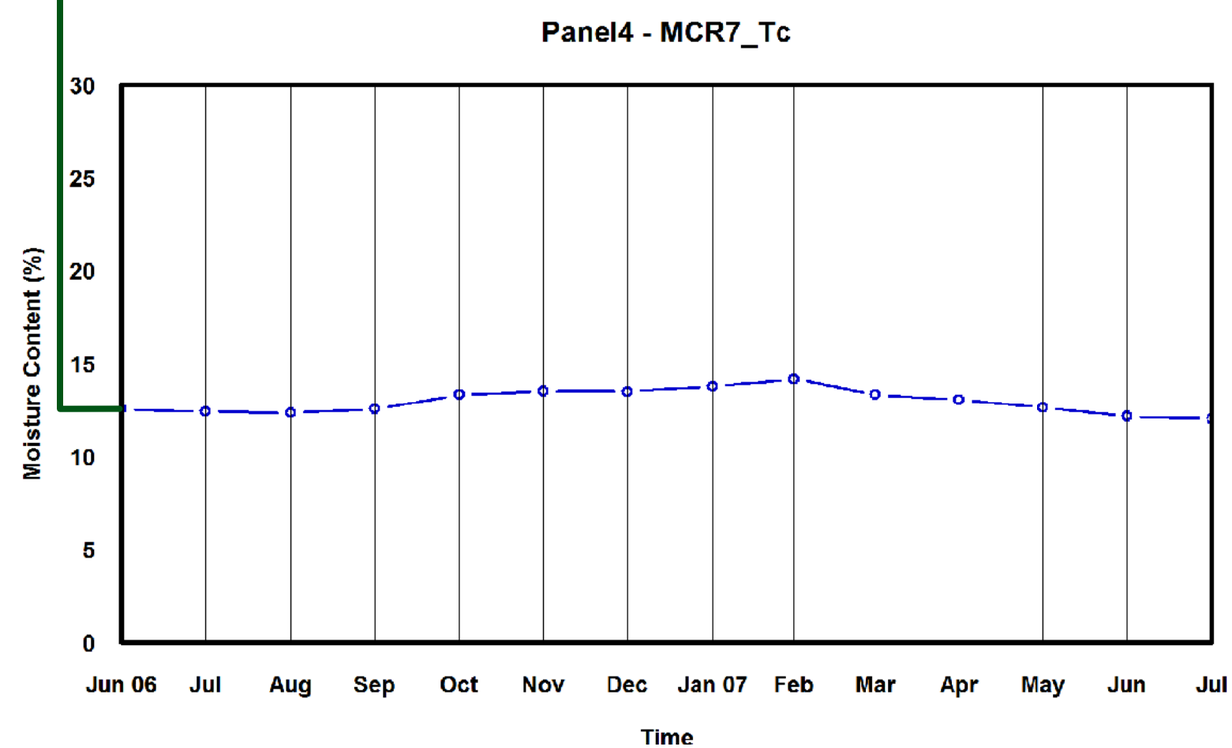
Panel4 - MCR7_Tc
Moisture Content (%)
30
25
20
15
10
5
0
Jun 06
Jul
Aug
Sep
Oct
Nov
Dec
Jan 07
Feb
Mar
Apr
May
Jun
Jul
Time

Panel 4

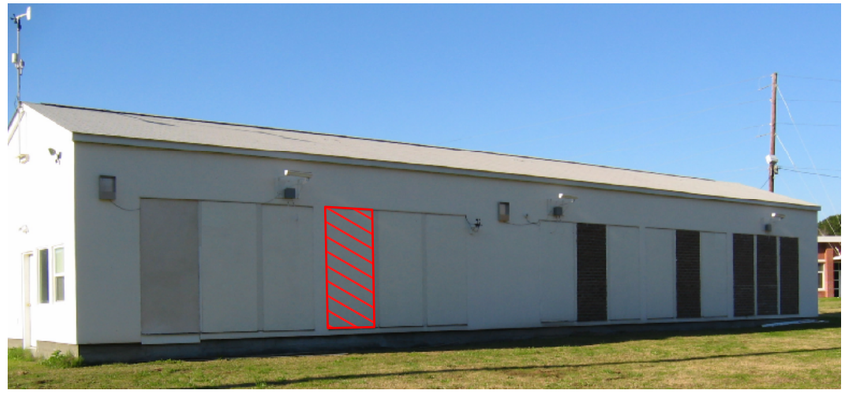

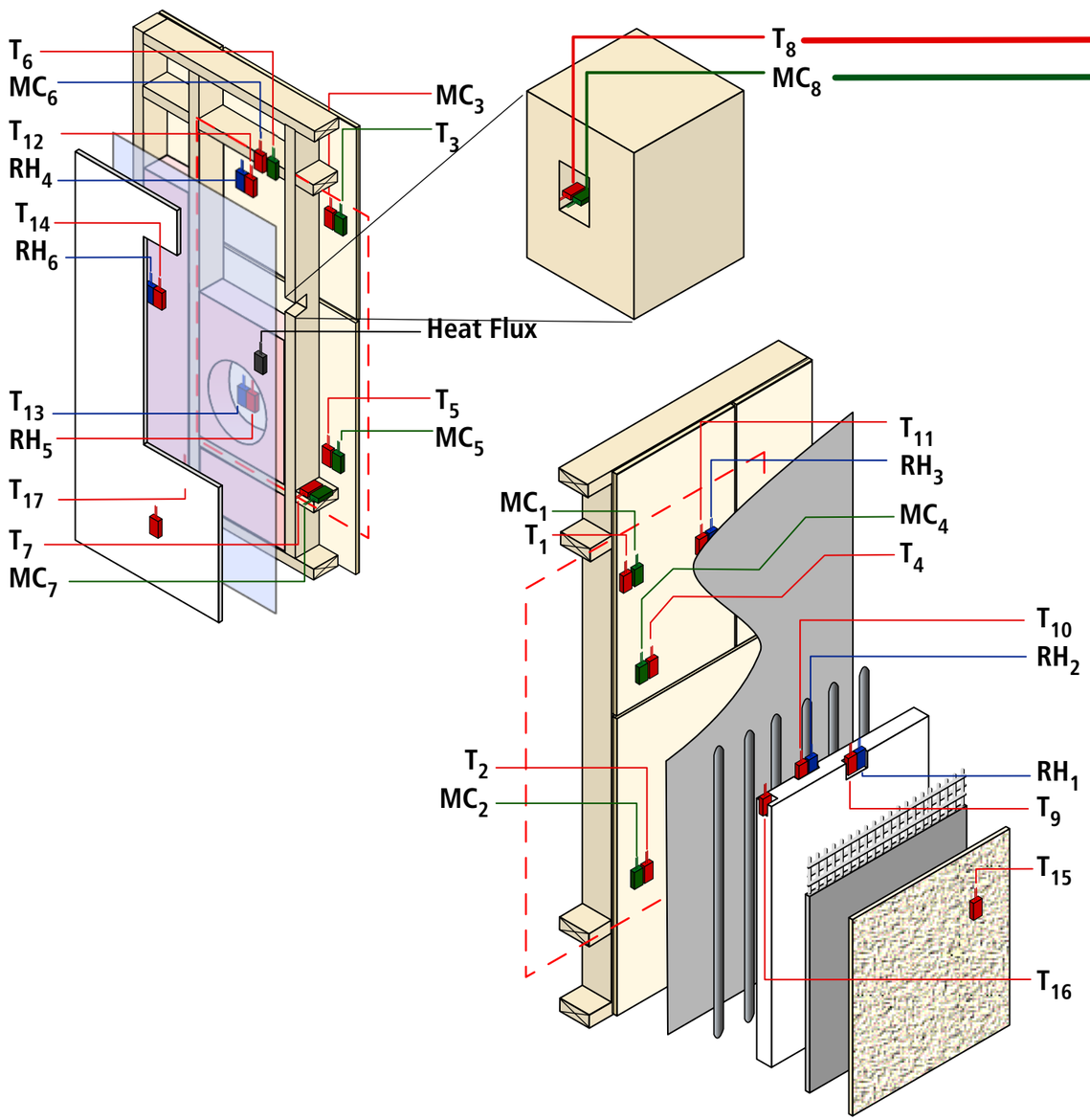
T_6
MC_6
T_{12}
RH_4
T_{14}
RH_6
T_{13}
RH_5
T_{17}
T_7
MC_7
MC_3
T_3
Heat Flux
T_5
MC_5
T_8
MC_8
T_{11}
RH_3
MC_1
T_1
MC_4
T_4
T_{10}
RH_2
T_2
MC_2
RH_1
T_9
T_{15}
T_{16}

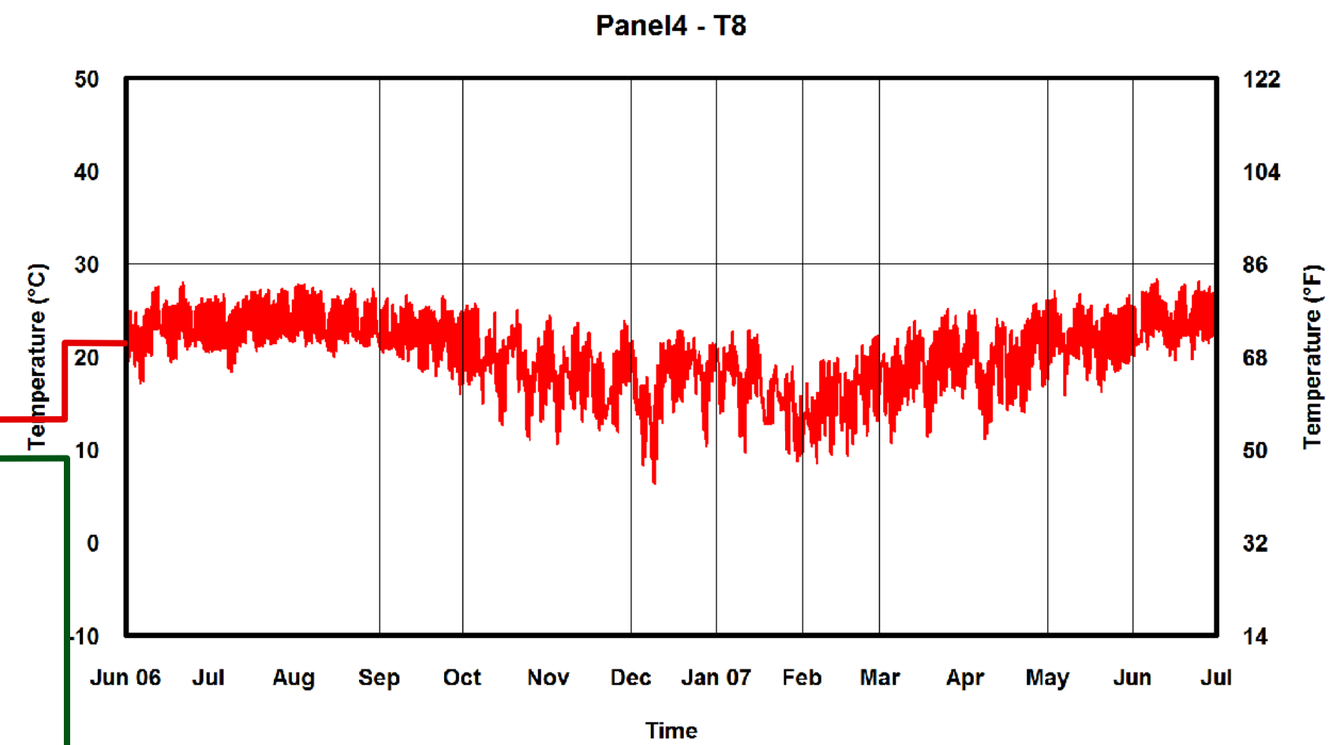
Panel4 - T8
Temperature (°C)
50
40
30
20
10
0
-10
Temperature (°F)
122
104
86
68
50
32
14
Jun 06
Jul
Aug
Sep
Oct
Nov
Dec
Jan 07
Feb
Mar
Apr
May
Jun
Jul
Time

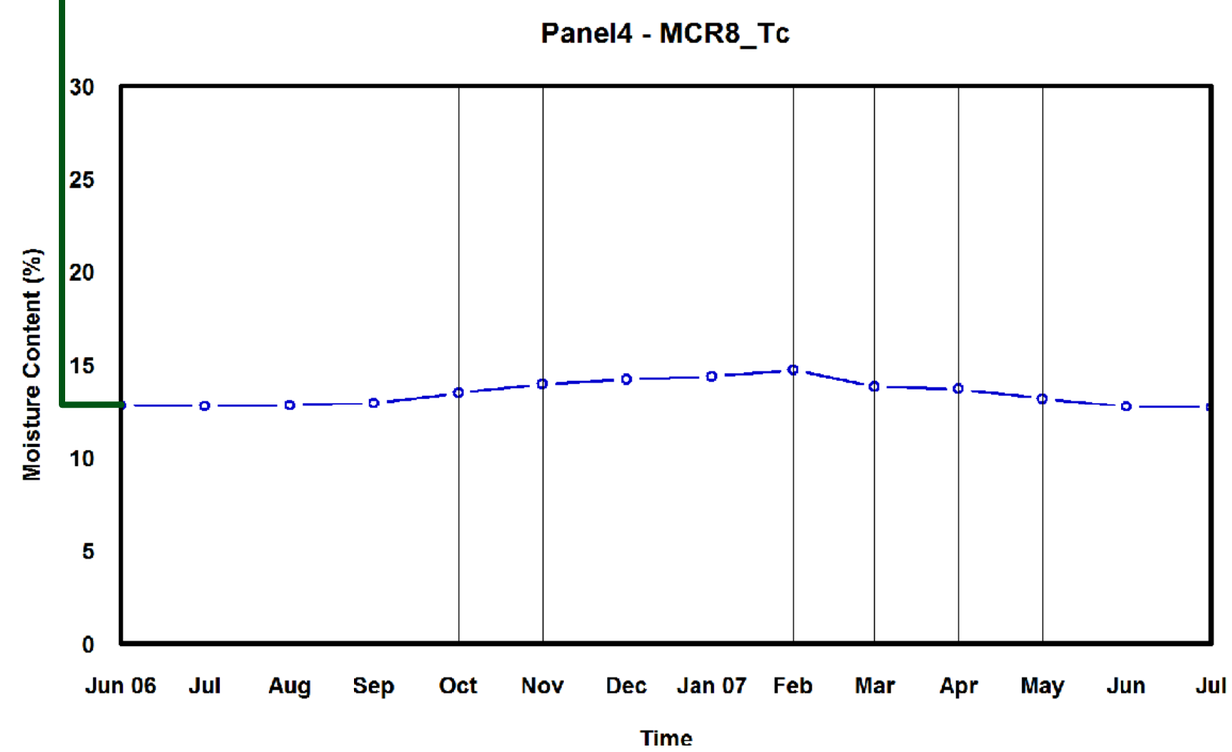
Panel4 - MCR8_Tc
Moisture Content (%)
30
25
20
15
10
5
0
Jun 06
Jul
Aug
Sep
Oct
Nov
Dec
Jan 07
Feb
Mar
Apr
May
Jun
Jul
Time

Panel 4

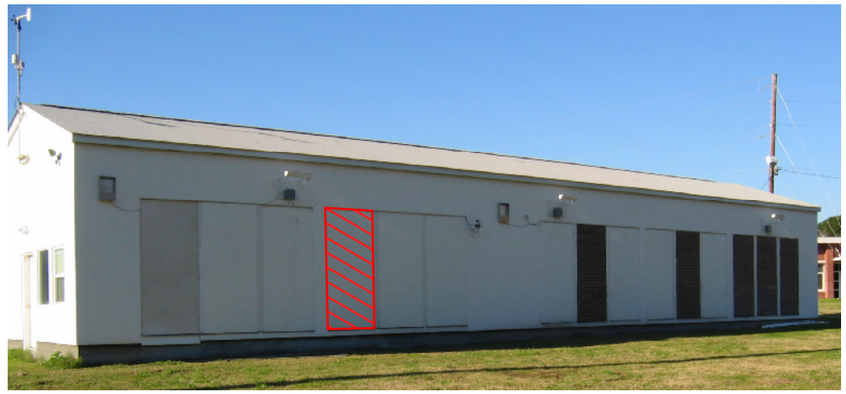

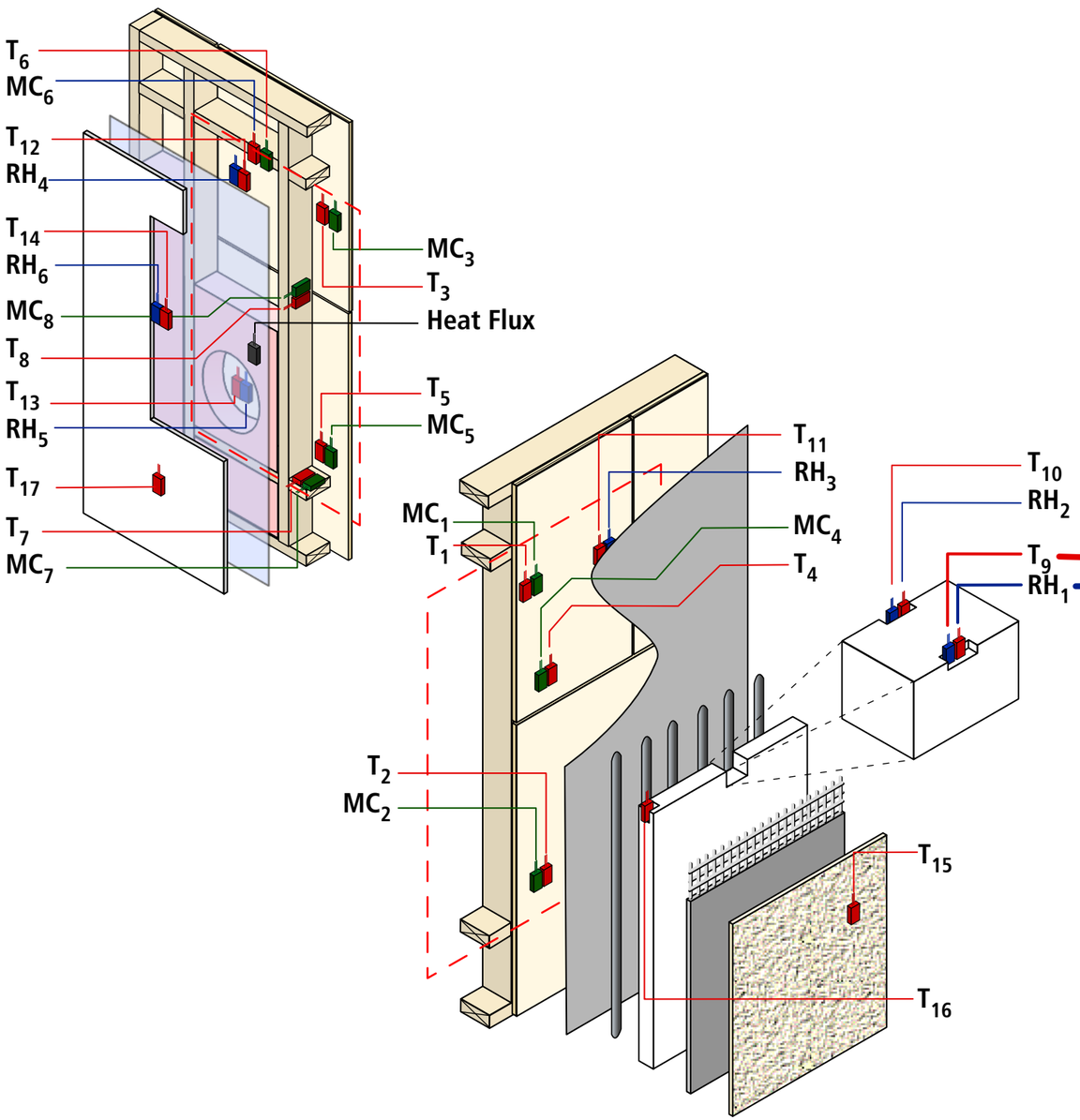
T_6
MC_6
T_{12}
RH_4
T_{14}
RH_6
MC_8
T_8
T_{13}
RH_5
T_{17}
T_7
MC_7
MC_3
T_3
Heat Flux
T_5
MC_5
T_{11}
RH_3
MC_1
T_1
MC_4
T_4
T_{10}
RH_2
T_9
RH_1
T_2
MC_2
T_{15}
T_{16}

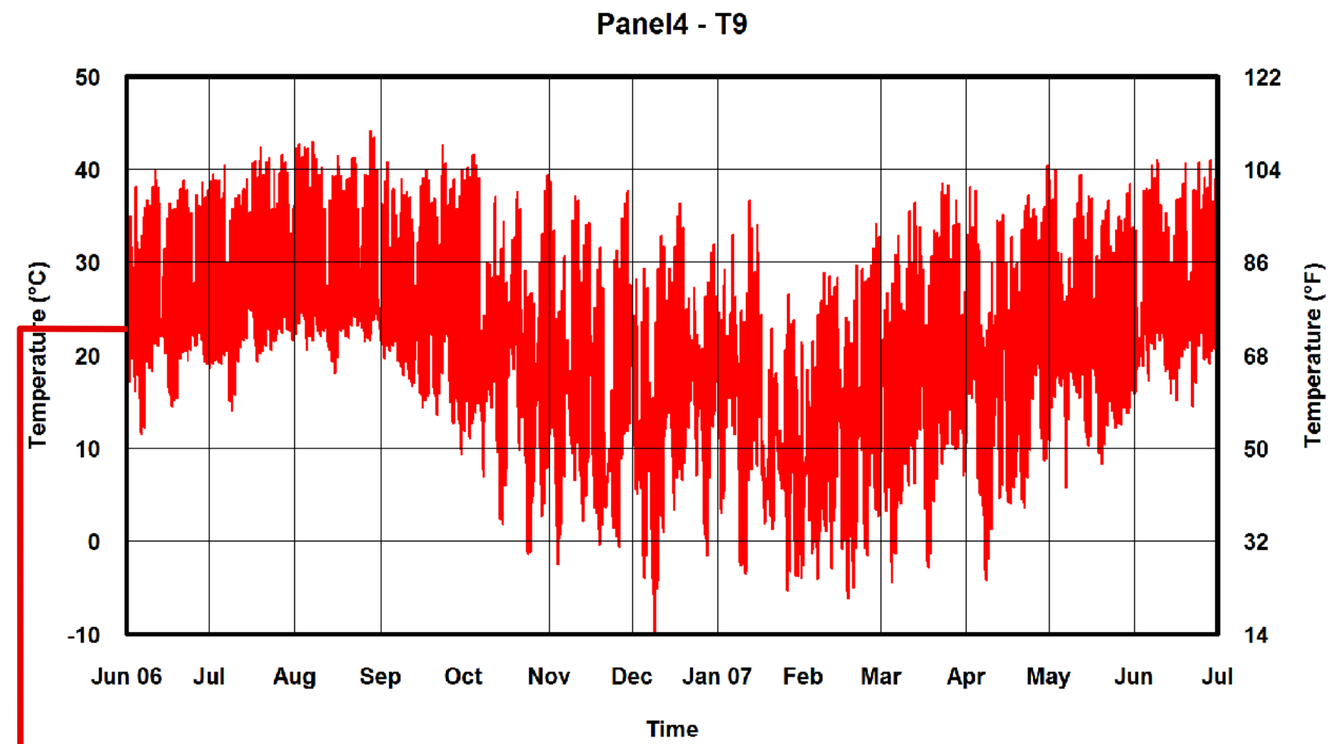
Panel4 - T9
Temperature (°C)
50
40
30
20
10
0
-10
Temperature (°F)
122
104
86
68
50
32
14
Jun 06
Jul
Aug
Sep
Oct
Nov
Dec
Jan 07
Feb
Mar
Apr
May
Jun
Jul
Time

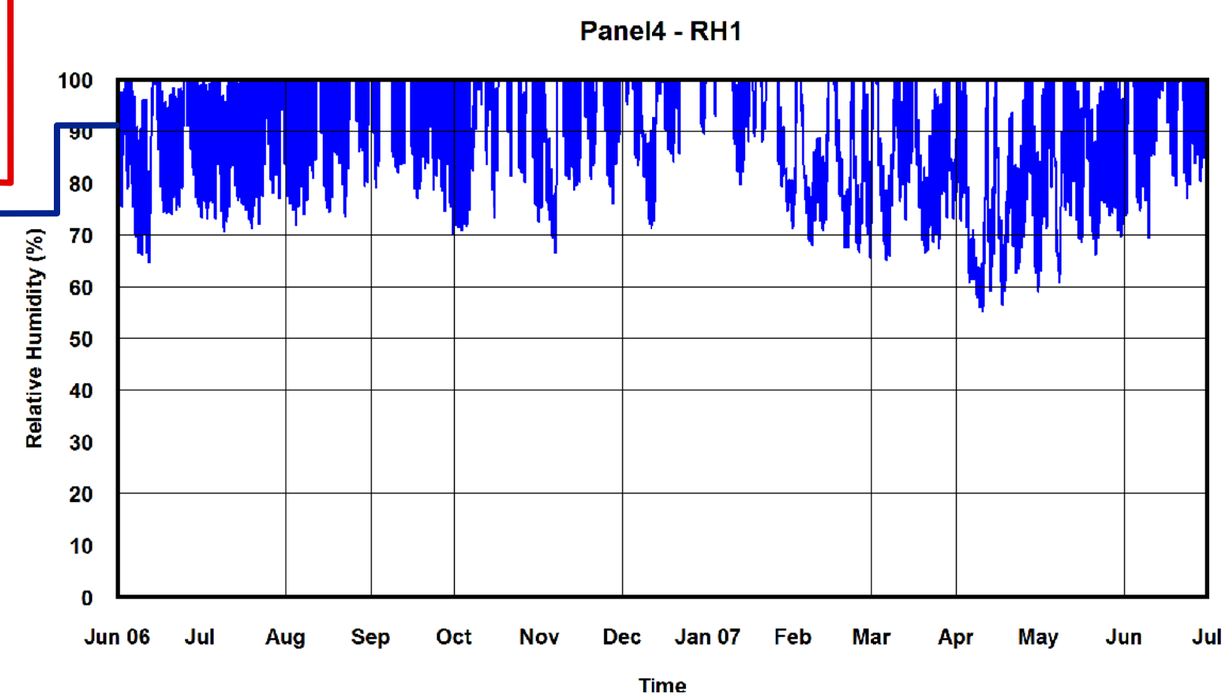
Panel4 - RH1
Relative Humidity (%)
100
90
80
70
60
50
40
30
20
10
0
Jun 06
Jul
Aug
Sep
Oct
Nov
Dec
Jan 07
Feb
Mar
Apr
May
Jun
Jul
Time

Panel 4

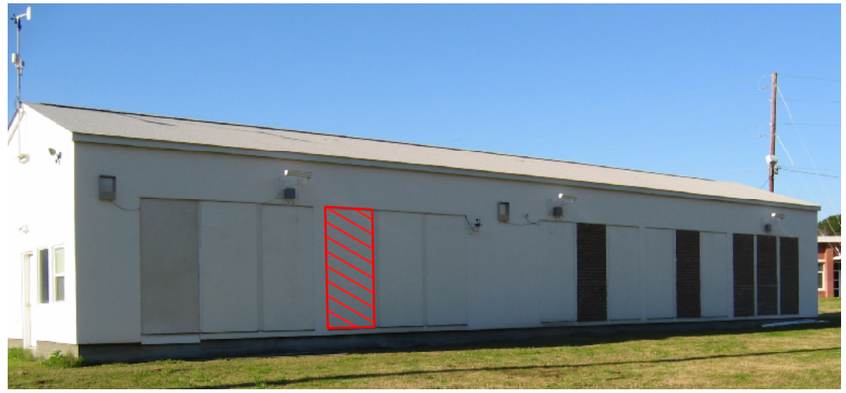

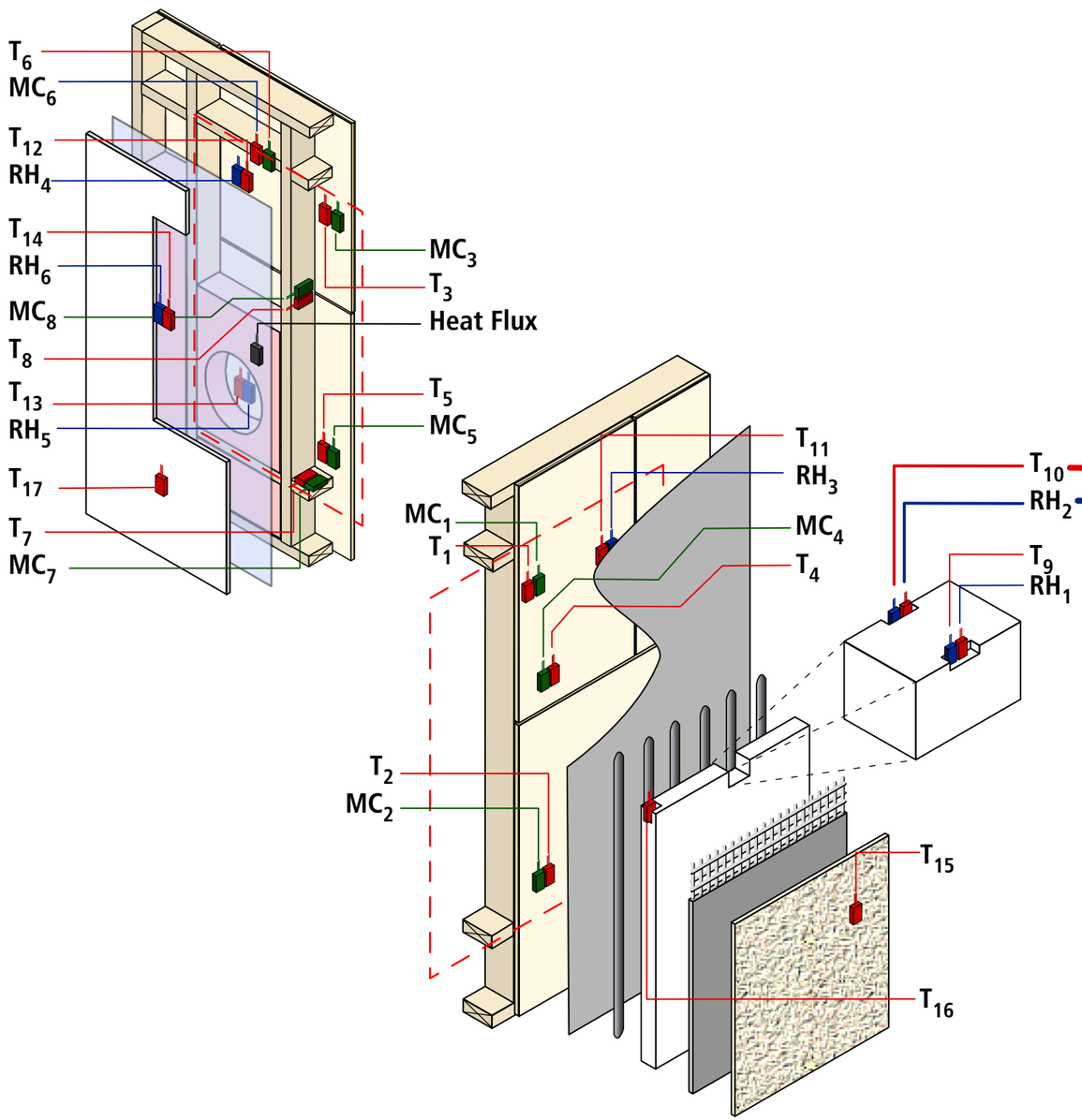
T_6
MC_6
T_{12}
RH_4
T_{14}
RH_6
MC_8
T_8
T_{13}
RH_5
T_{17}
T_7
MC_7
MC_3
T_3
Heat Flux
T_5
MC_5
T_{11}
RH_3
MC_1
T_1
MC_4
T_4
T_{10}
RH_2
T_9
RH_1
T_2
MC_2
T_{15}
T_{16}

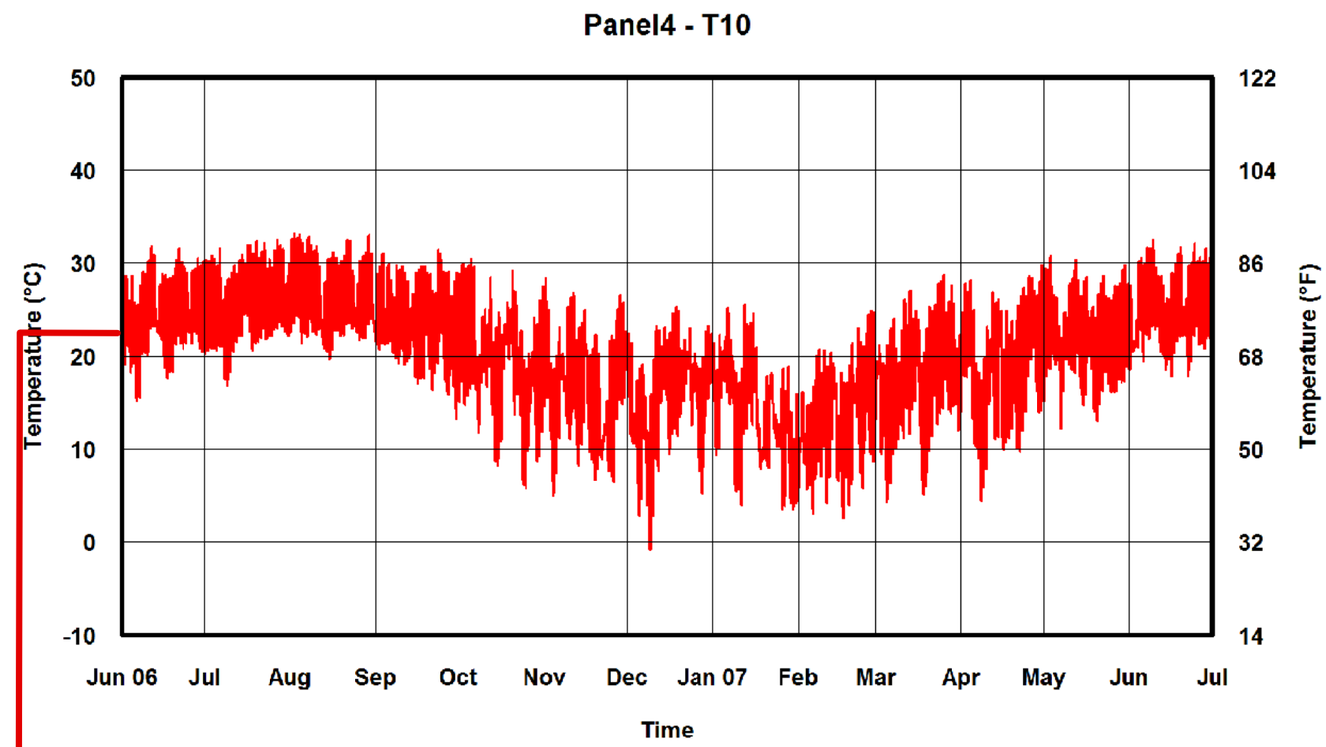
Panel4 - T10
Temperature (°C)
Temperature (°F)
50
40
30
20
10
0
-10
122
104
86
68
50
32
14
Jun 06
Jul
Aug
Sep
Oct
Nov
Dec
Jan 07
Feb
Mar
Apr
May
Jun
Jul
Time

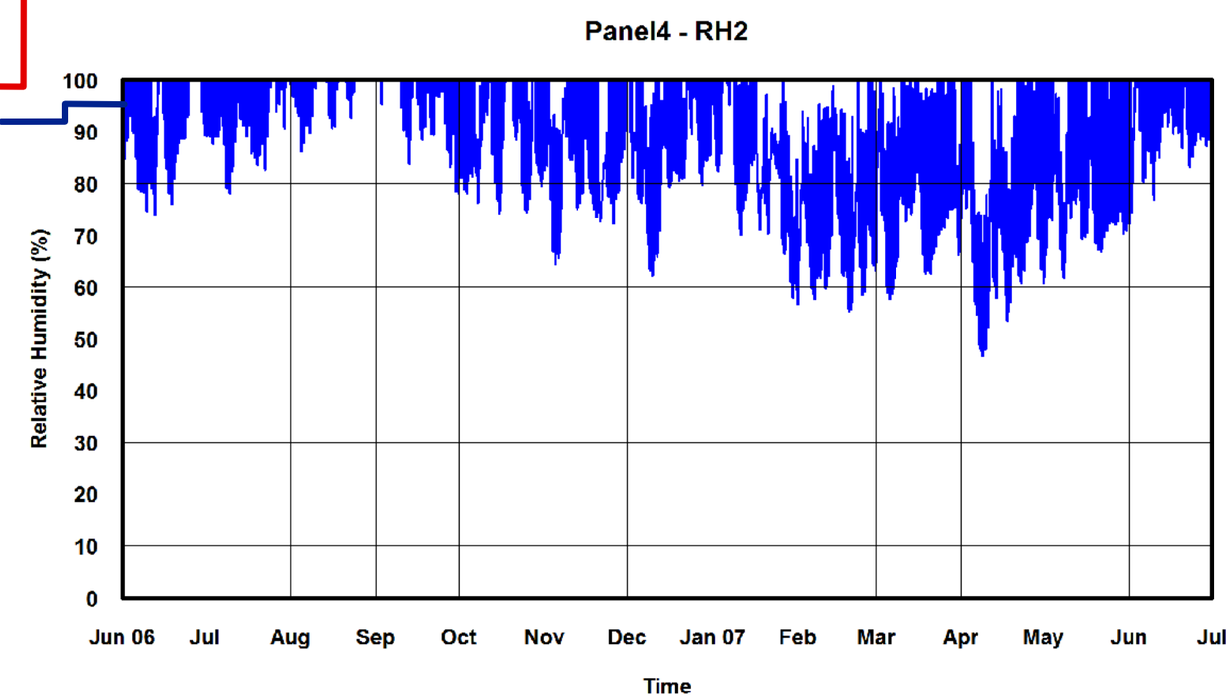
Panel4 - RH2
Relative Humidity (%)
100
90
80
70
60
50
40
30
20
10
0
Jun 06
Jul
Aug
Sep
Oct
Nov
Dec
Jan 07
Feb
Mar
Apr
May
Jun
Jul
Time

Panel 4

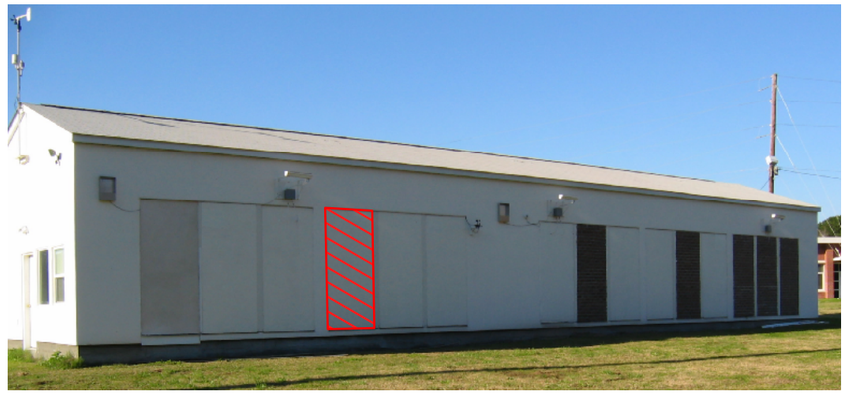

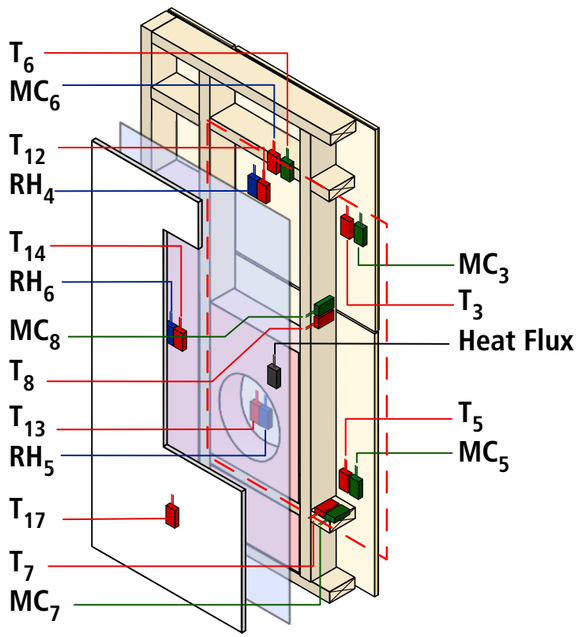
T_6
MC_6
T_{12}
RH_4
T_{14}
RH_6
MC_8
T_8
T_{13}
RH_5
T_{17}
T_7
MC_7
MC_3
T_3
Heat Flux
T_5
MC_5

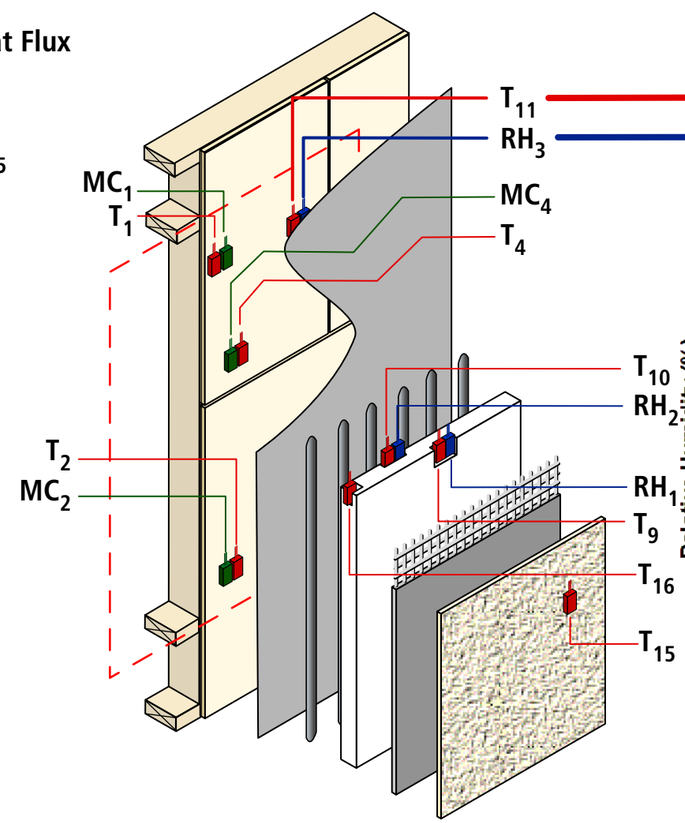
T_{11}
RH_3
MC_1
T_1
MC_4
T_4
T_{10}
RH_2
T_2
MC_2
RH_1
T_9
T_{16}
T_{15}

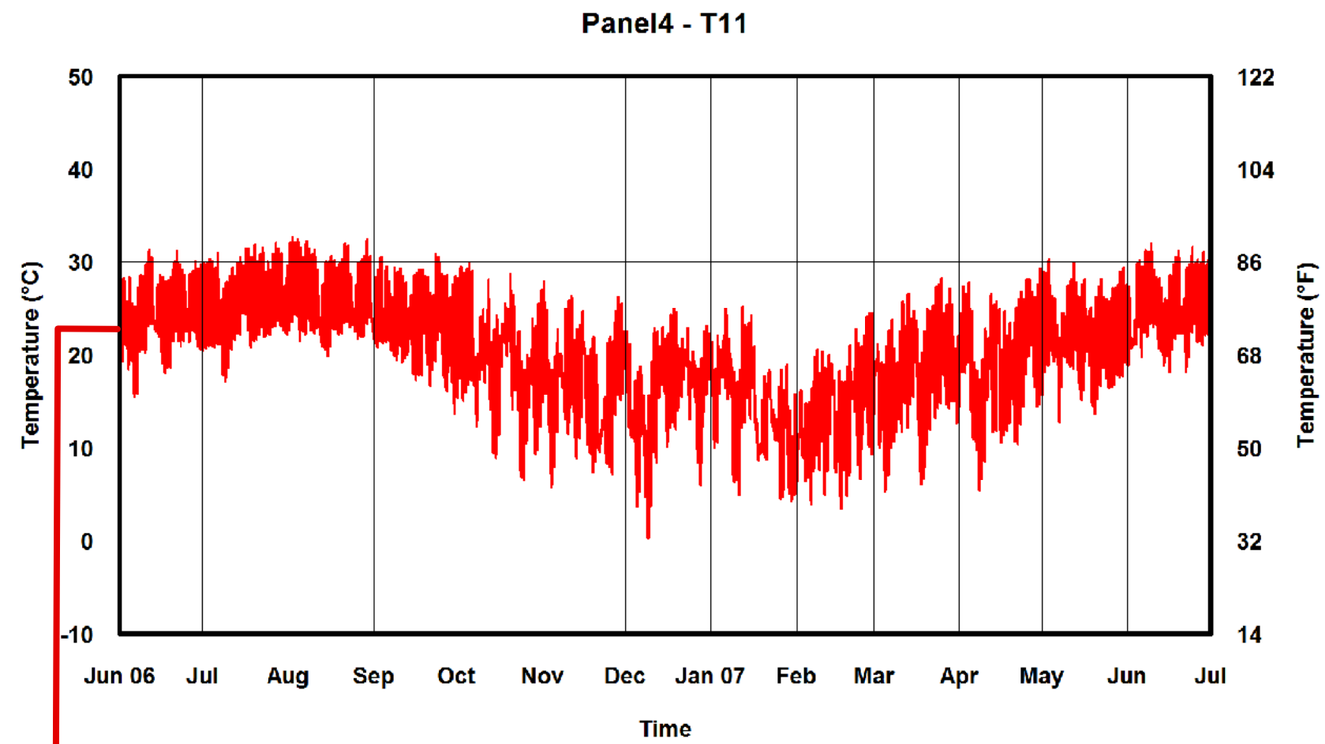
Panel4 - T11
Temperature (°C)
50
40
30
20
10
0
-10
Temperature (°F)
122
104
86
68
50
32
14
Jun 06
Jul
Aug
Sep
Oct
Nov
Dec
Jan 07
Feb
Mar
Apr
May
Jun
Jul
Time

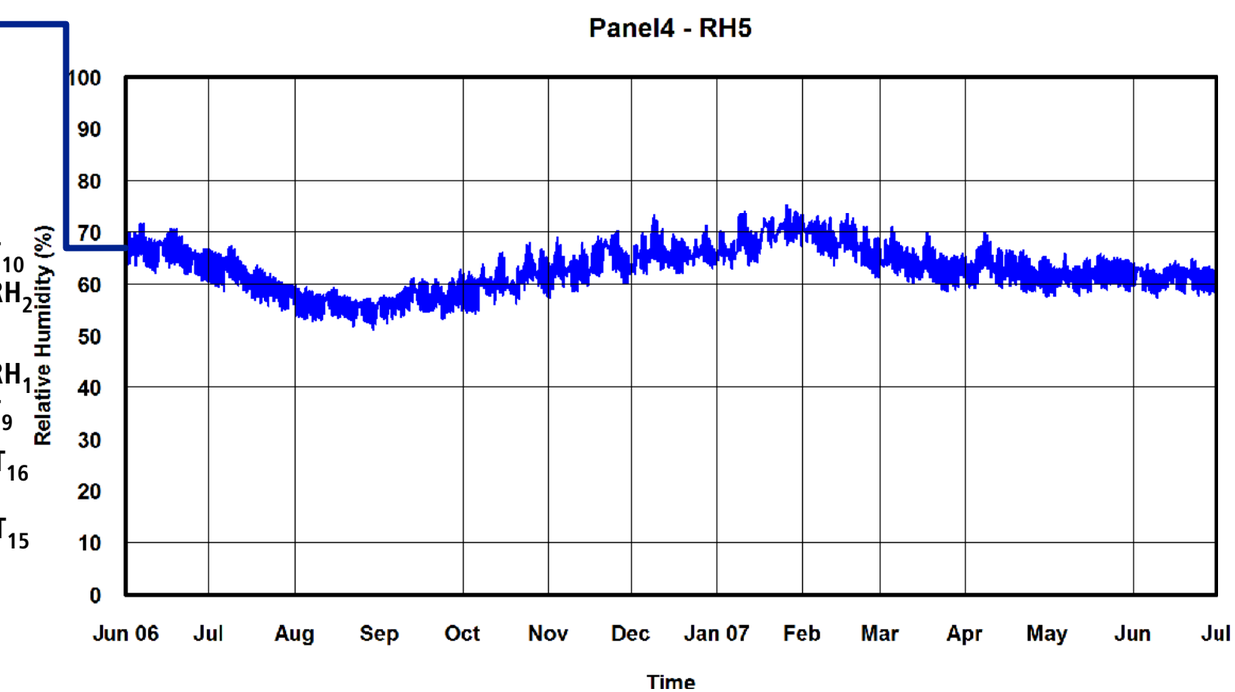
Panel4 - RH5
Relative Humidity (%)
100
90
80
70
60
50
40
30
20
10
0
Jun 06
Jul
Aug
Sep
Oct
Nov
Dec
Jan 07
Feb
Mar
Apr
May
Jun
Jul
Time

Panel 4

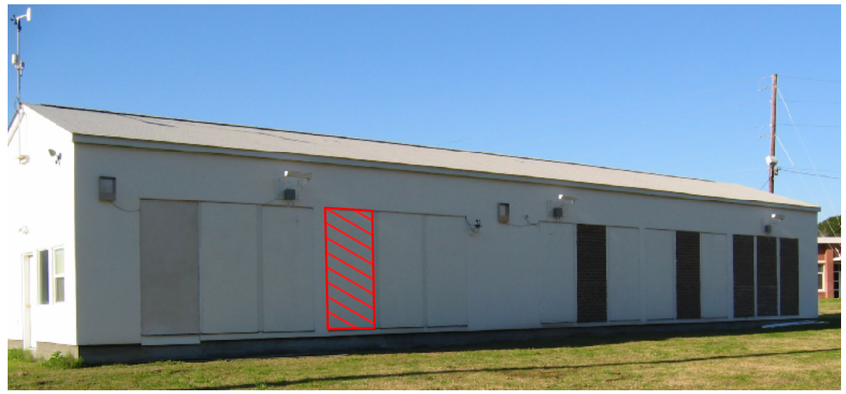

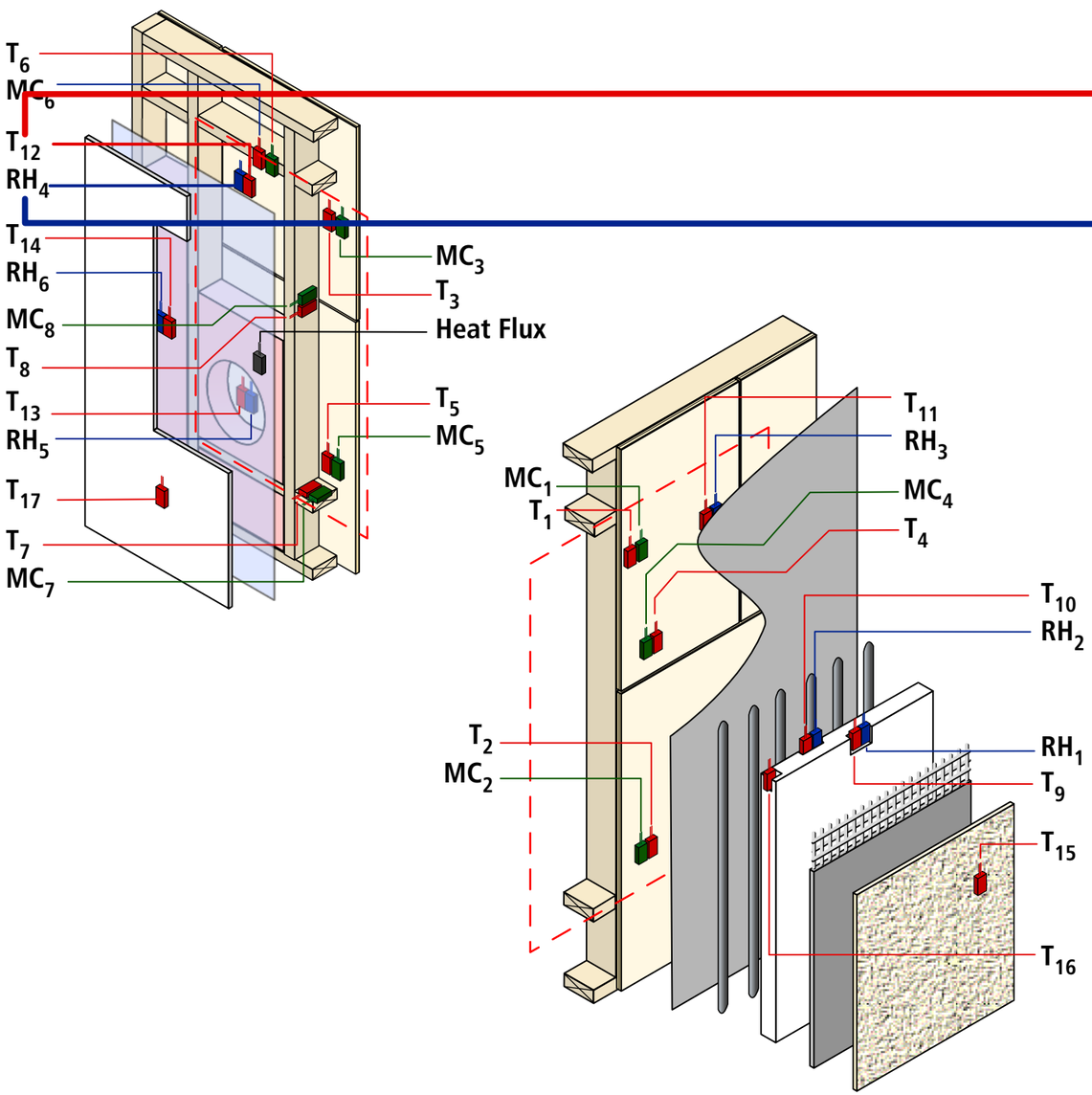
T_6
MC_6
T_{12}
RH_4
T_{14}
RH_6
MC_8
T_8
T_{13}
RH_5
T_{17}
T_7
MC_7
MC_3
T_3
Heat Flux
T_5
MC_5
MC_1
T_1
T_2
MC_2
T_{11}
RH_3
MC_4
T_4
T_{10}
RH_2
RH_1
T_9
T_{15}
T_{16}

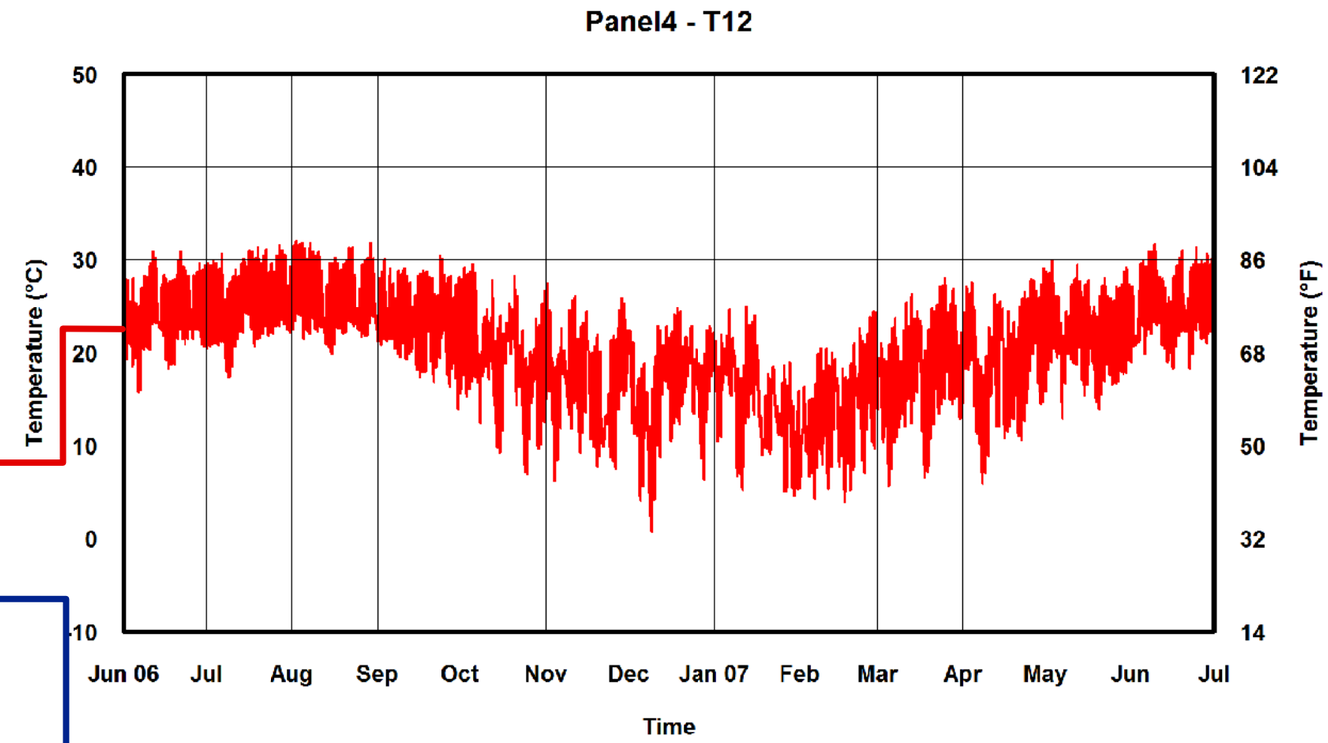
Panel4 - T12
Temperature (°C)
50
40
30
20
10
0
-10
Temperature (°F)
122
104
86
68
50
32
14
Jun 06
Jul
Aug
Sep
Oct
Nov
Dec
Jan 07
Feb
Mar
Apr
May
Jun
Jul
Time

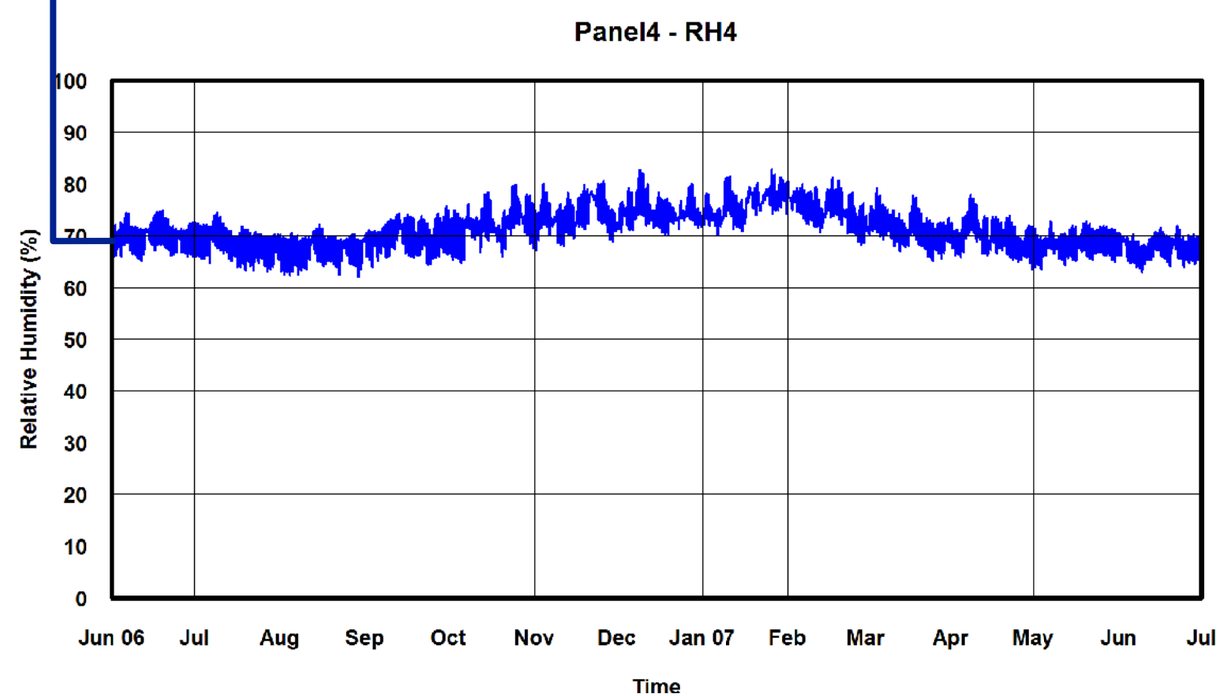
Panel4 - RH4
Relative Humidity (%)
100
90
80
70
60
50
40
30
20
10
0
Jun 06
Jul
Aug
Sep
Oct
Nov
Dec
Jan 07
Feb
Mar
Apr
May
Jun
Jul
Time

Panel 4

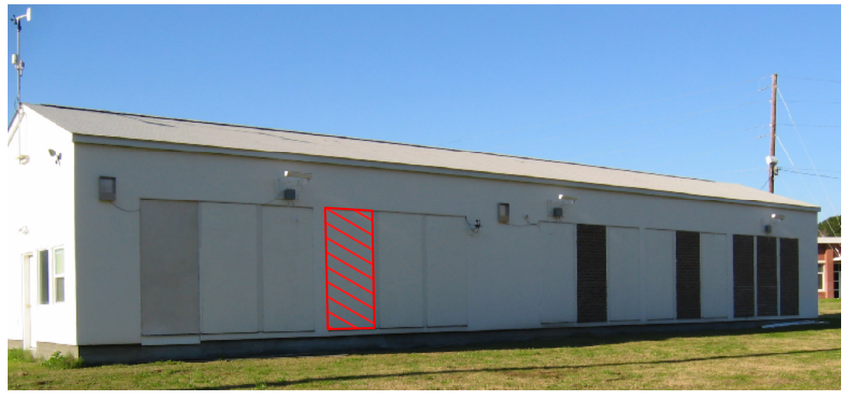

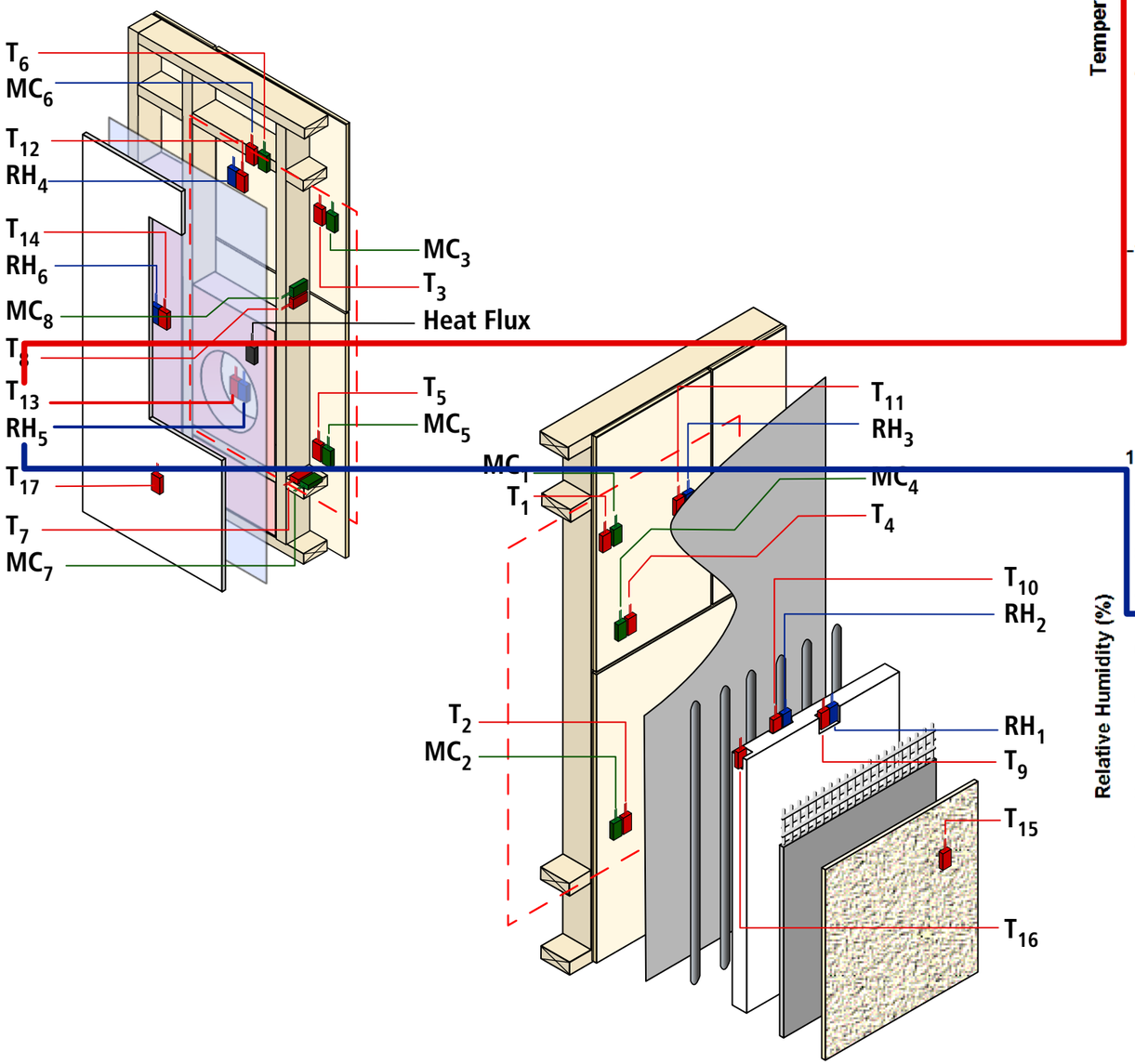
T6
MC6
T12
RH4
T14
RH6
MC8
T8
T13
RH5
T17
T7
MC7
MC3
T3
Heat Flux
T5
MC5
MC1
T1
T11
RH3
MC4
T4
T10
RH2
T2
MC2
RH1
T9
T15
T16

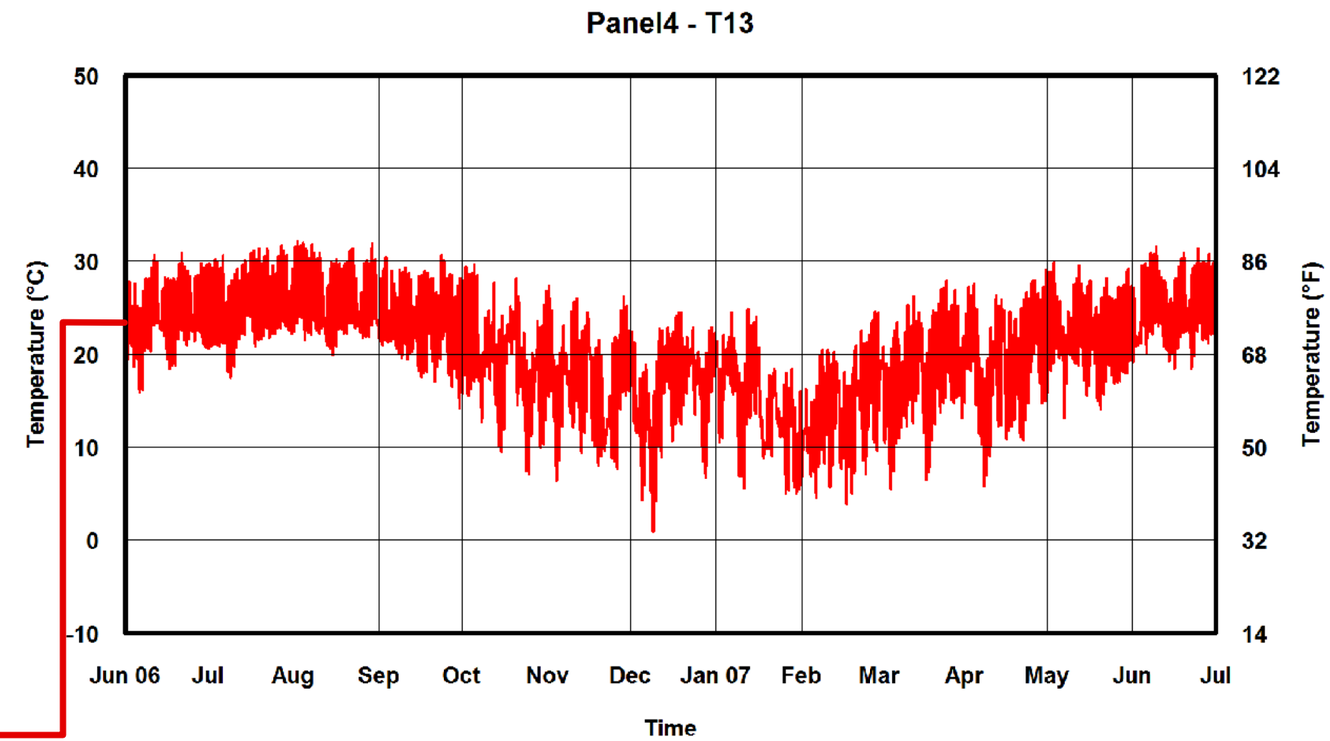
Panel4 - T13
Temperature (°C)
Temperature (°F)
50
40
30
20
10
0
-10
122
104
86
68
50
32
14
Jun 06
Jul
Aug
Sep
Oct
Nov
Dec
Jan 07
Feb
Mar
Apr
May
Jun
Jul
Time

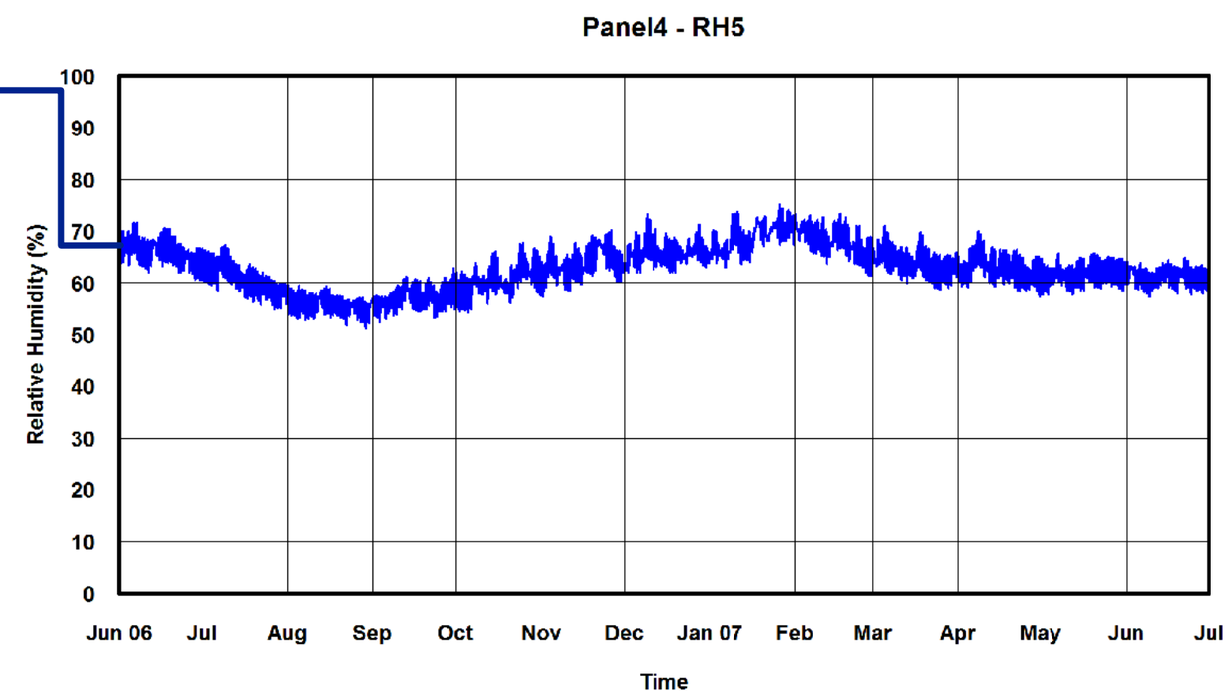
Panel4 - RH5
Relative Humidity (%)
100
90
80
70
60
50
40
30
20
10
0
Jun 06
Jul
Aug
Sep
Oct
Nov
Dec
Jan 07
Feb
Mar
Apr
May
Jun
Jul
Time

Panel 4

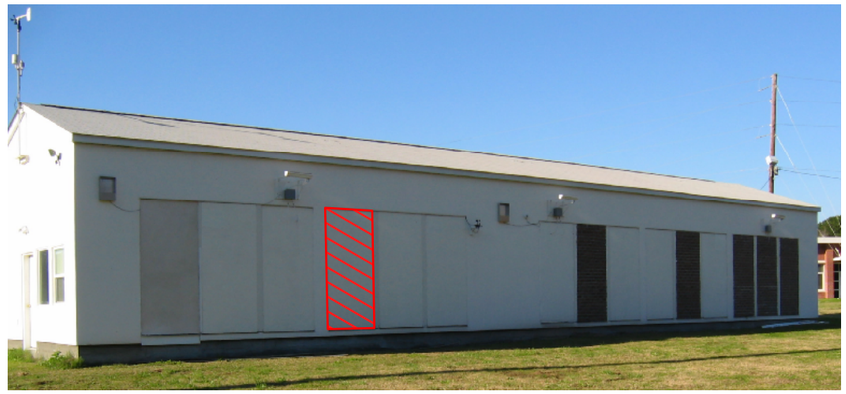

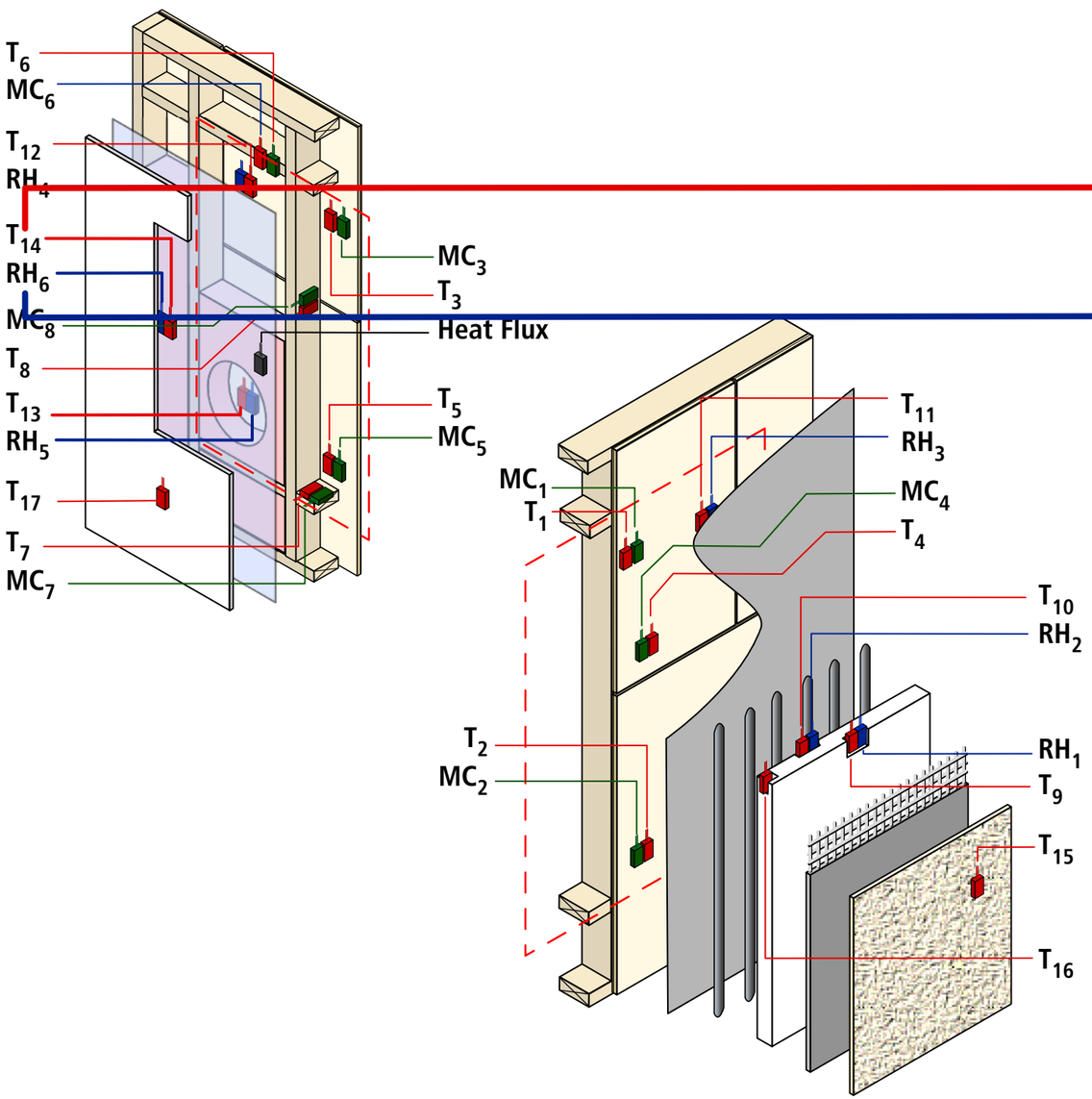
T_6
MC_6
T_{12}
RH_4
T_{14}
RH_6
MC_8
T_8
T_{13}
RH_5
T_{17}
T_7
MC_7
MC_3
T_3
Heat Flux
T_5
MC_5
MC_1
T_1
T_2
MC_2
T_{11}
RH_3
MC_4
T_4
T_{10}
RH_2
RH_1
T_9
T_{15}
T_{16}

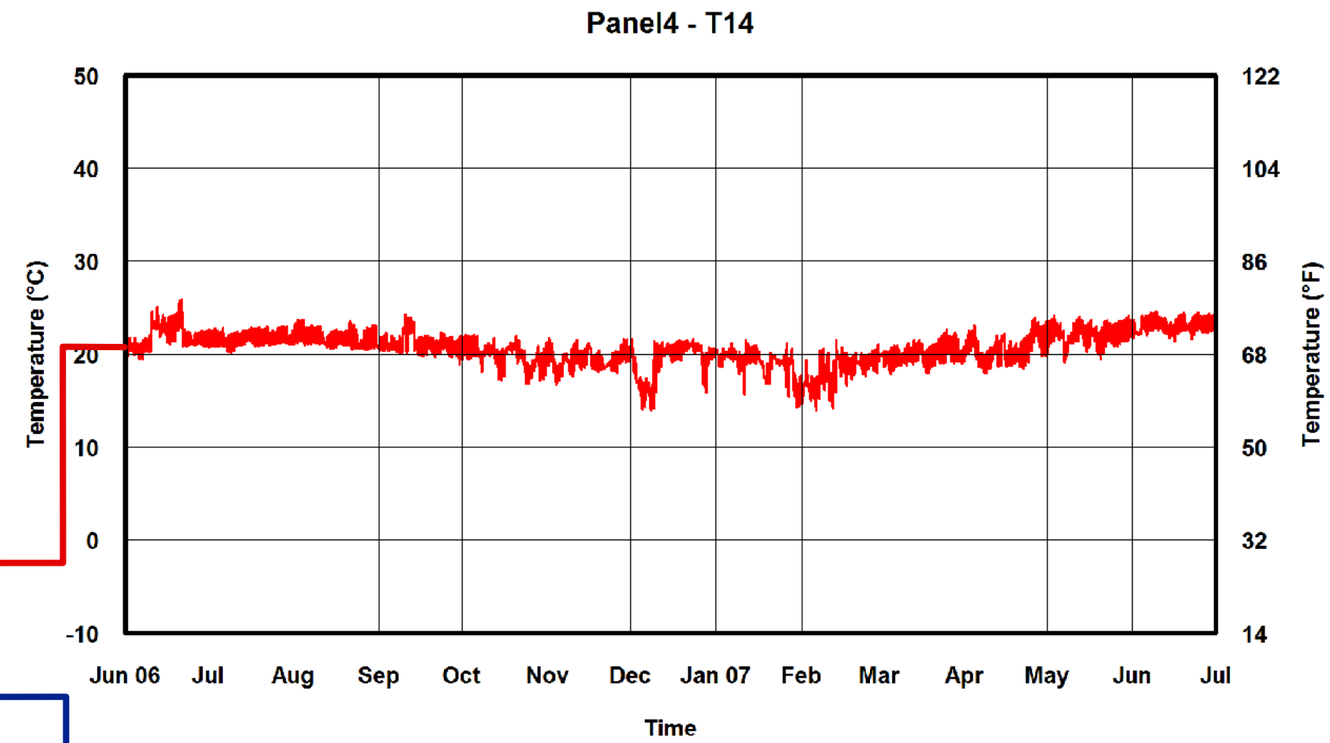
Panel4 - T14
Temperature (°C)
Temperature (°F)
50
40
30
20
10
0
-10
122
104
86
68
50
32
14
Jun 06
Jul
Aug
Sep
Oct
Nov
Dec
Jan 07
Feb
Mar
Apr
May
Jun
Jul
Time

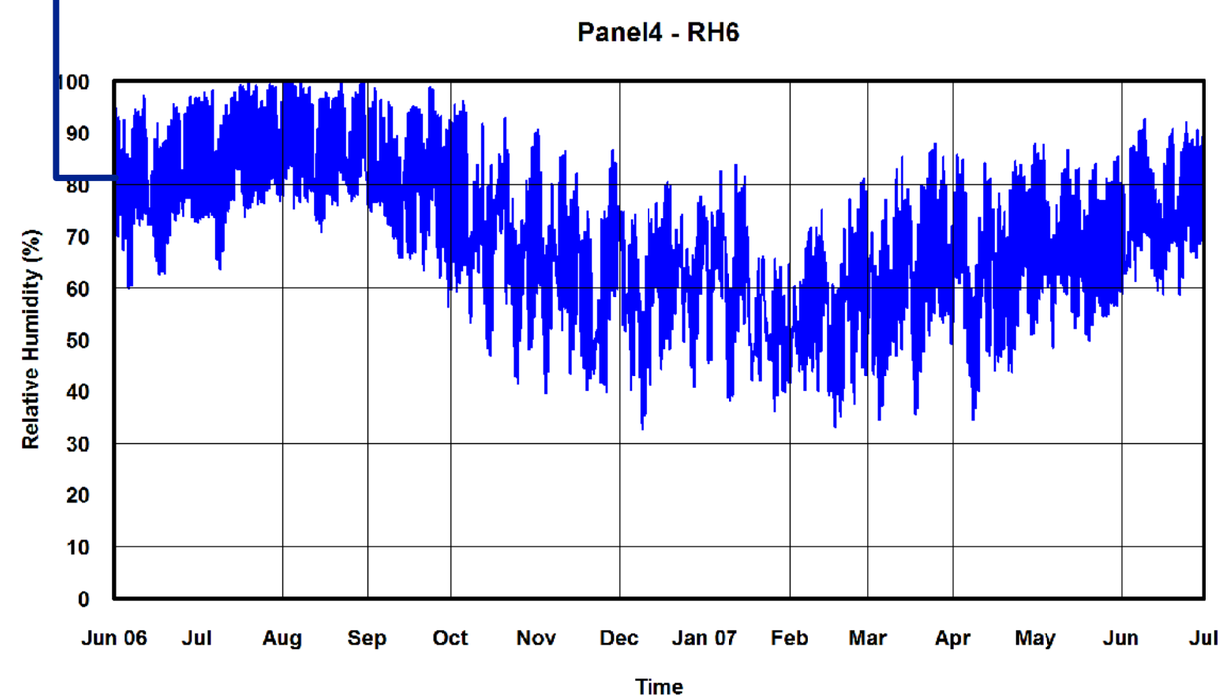
Panel4 - RH6
Relative Humidity (%)
100
90
80
70
60
50
40
30
20
10
0
Jun 06
Jul
Aug
Sep
Oct
Nov
Dec
Jan 07
Feb
Mar
Apr
May
Jun
Jul
Time

Panel 4

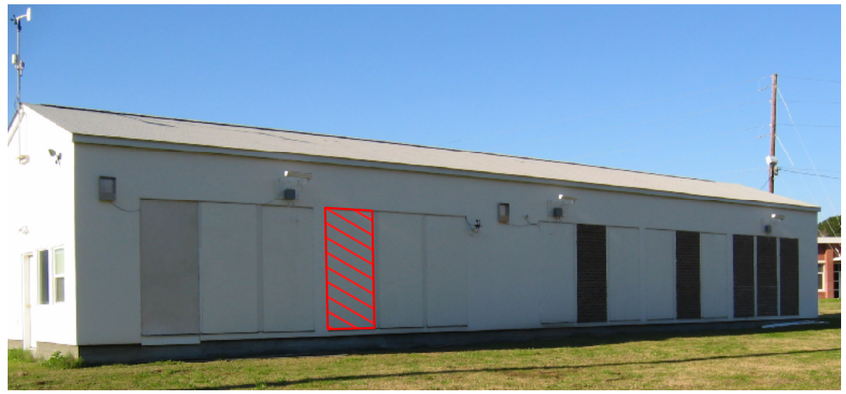

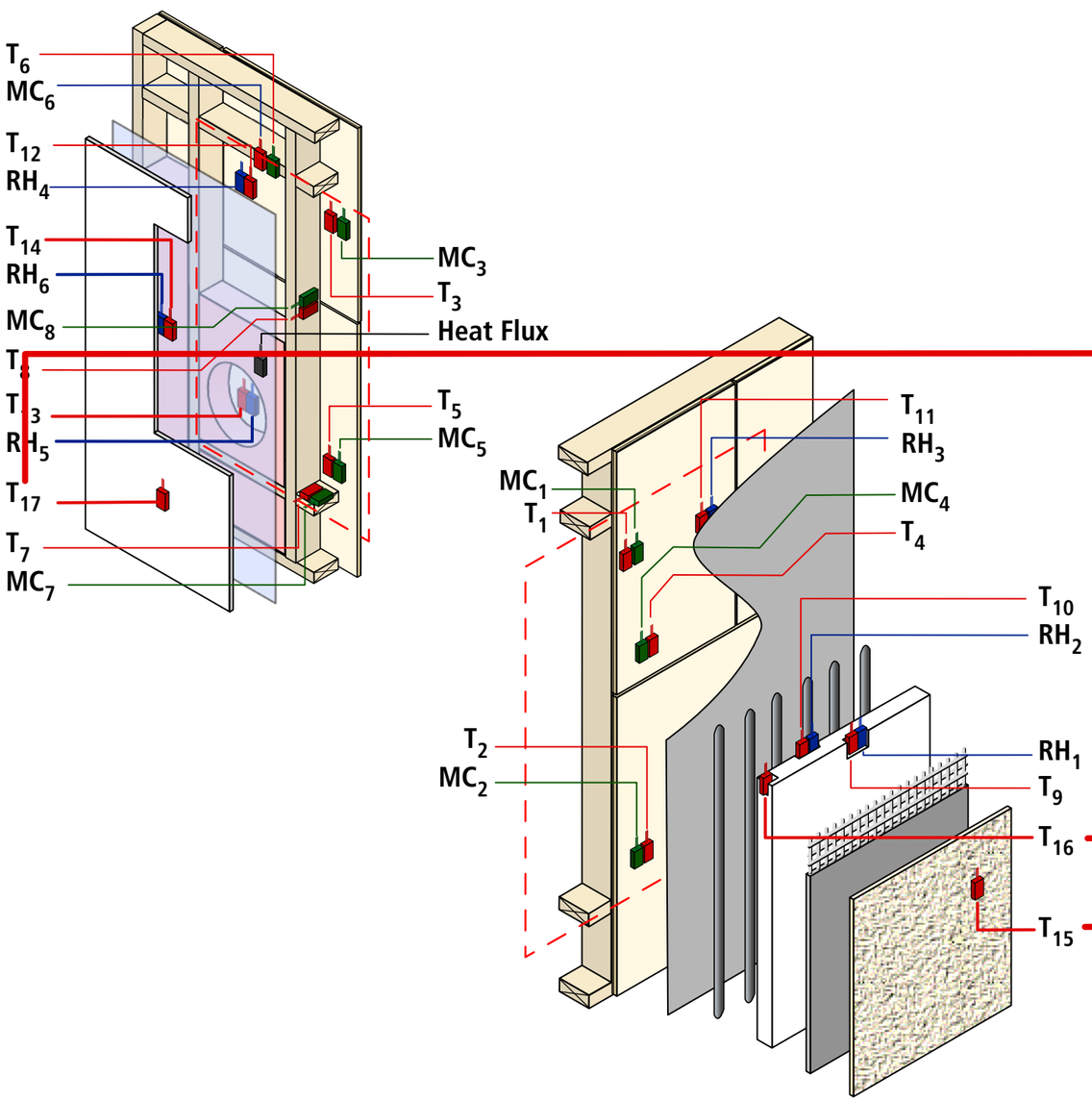
T6
MC6
T12
RH4
T14
RH6
MC8
T8
T13
RH5
T17
T7
MC7
MC3
T3
Heat Flux
T5
MC5
MC1
T1
T2
MC2
T11
RH3
MC4
T4
T10
RH2
RH1
T9
T16
T15

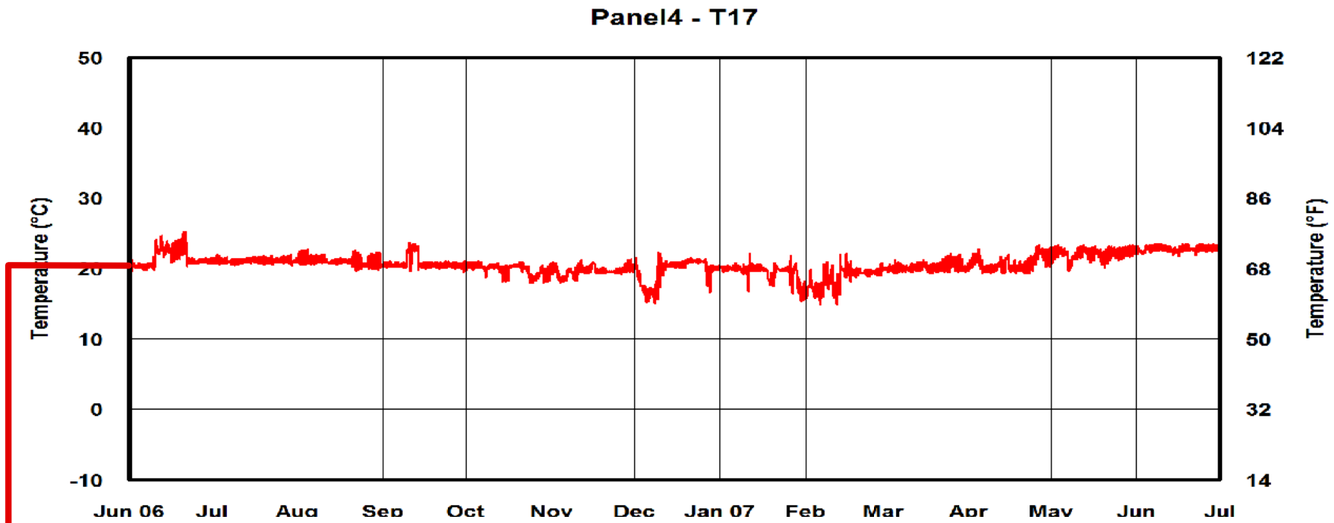
Panel4 - T17
Temperature (°C)
Temperature (°F)
50
40
30
20
10
0
-10
122
104
86
68
50
32
14
Jun 06
Jul
Aug
Sep
Oct
Nov
Dec
Jan 07
Feb
Mar
Apr
May
Jun
Jul

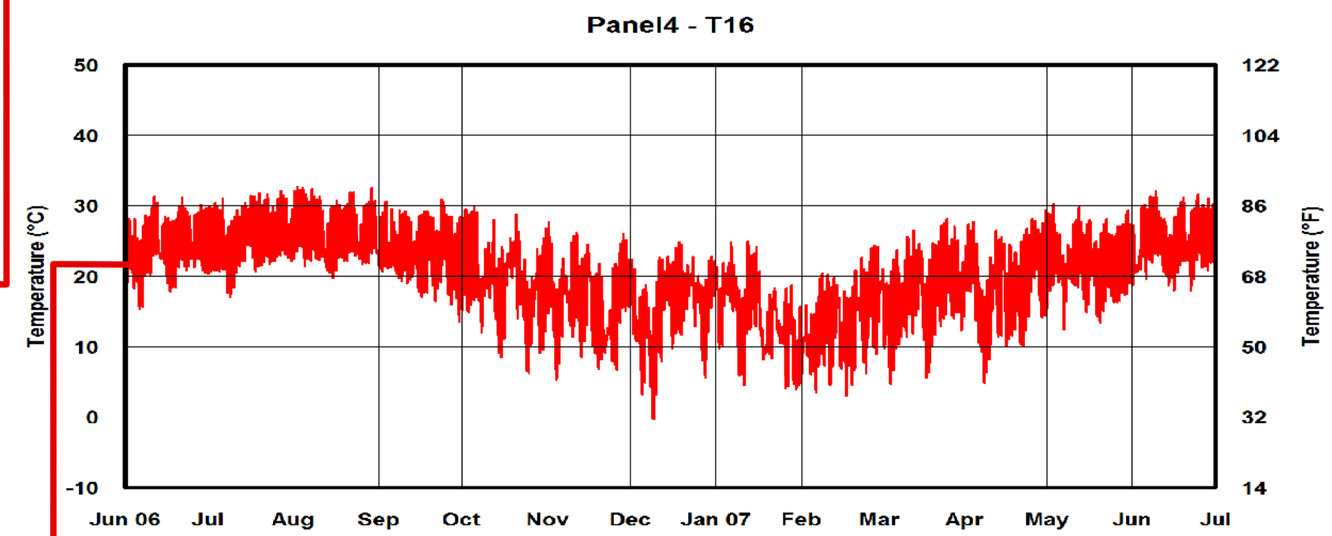
Panel4 - T16
Temperature (°C)
Temperature (°F)
50
40
30
20
10
0
-10
122
104
86
68
50
32
14
Jun 06
Jul
Aug
Sep
Oct
Nov
Dec
Jan 07
Feb
Mar
Apr
May
Jun
Jul

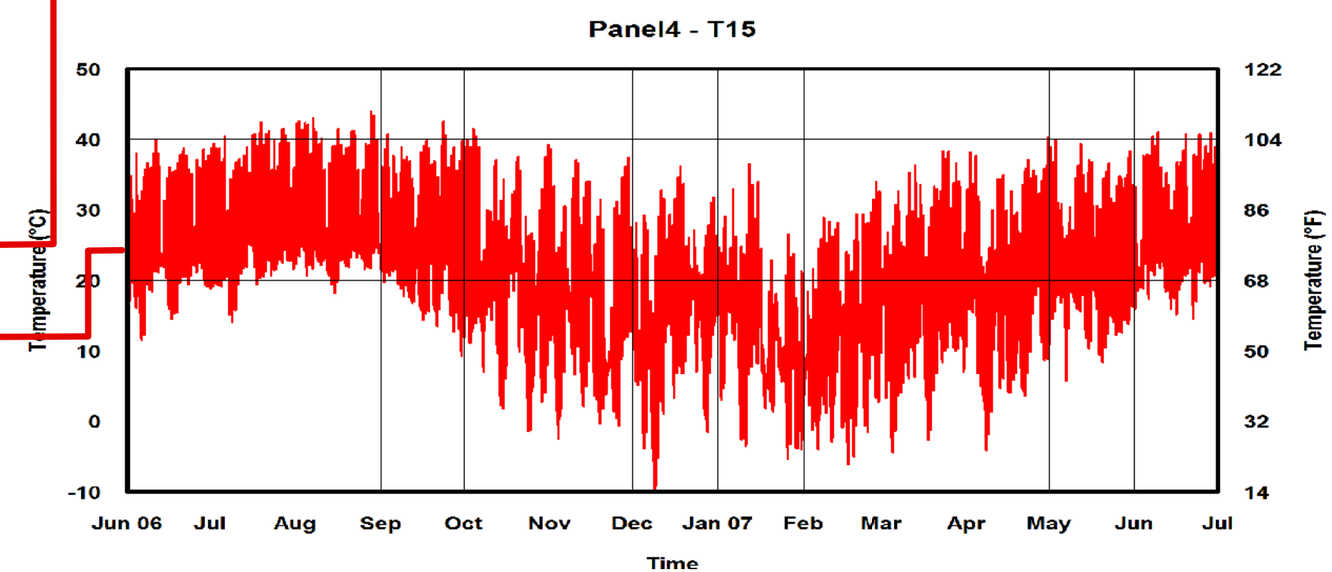
Panel4 - T15
Temperature (°C)
Temperature (°F)
50
40
30
20
10
0
-10
122
104
86
68
50
32
14
Jun 06
Jul
Aug
Sep
Oct
Nov
Dec
Jan 07
Feb
Mar
Apr
May
Jun
Jul
Time

Panel 5

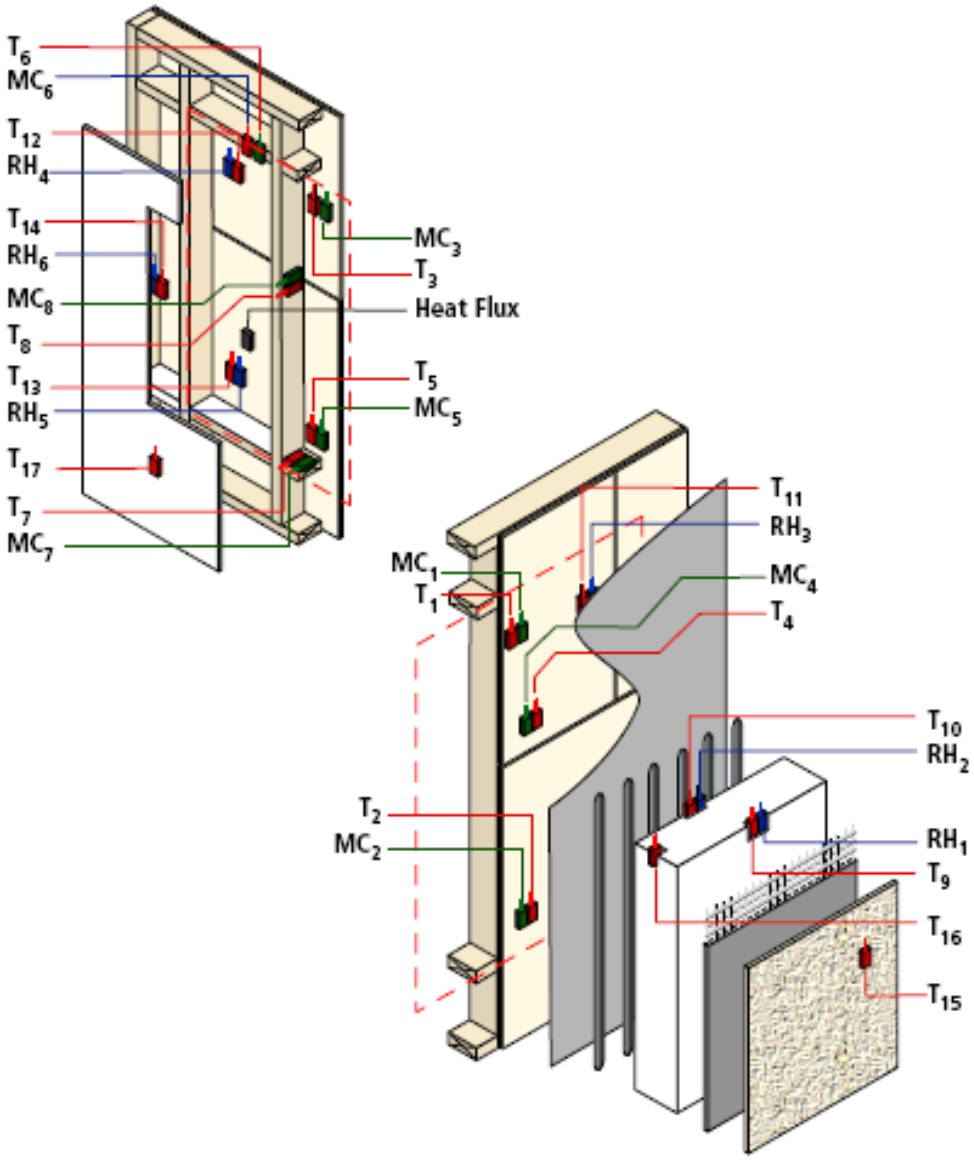
T_6
MC_6
T_{12}
RH_4
T_{14}
RH_6
MC_8
T_8
T_{13}
RH_5
T_{17}
T_7
MC_7
MC_3
T_3
Heat Flux
T_5
MC_5
T_{11}
RH_3
MC_1
T_1
MC_4
T_4
T_{10}
RH_2
T_2
MC_2
RH_1
T_9
T_{16}
T_{15}

Panel 5

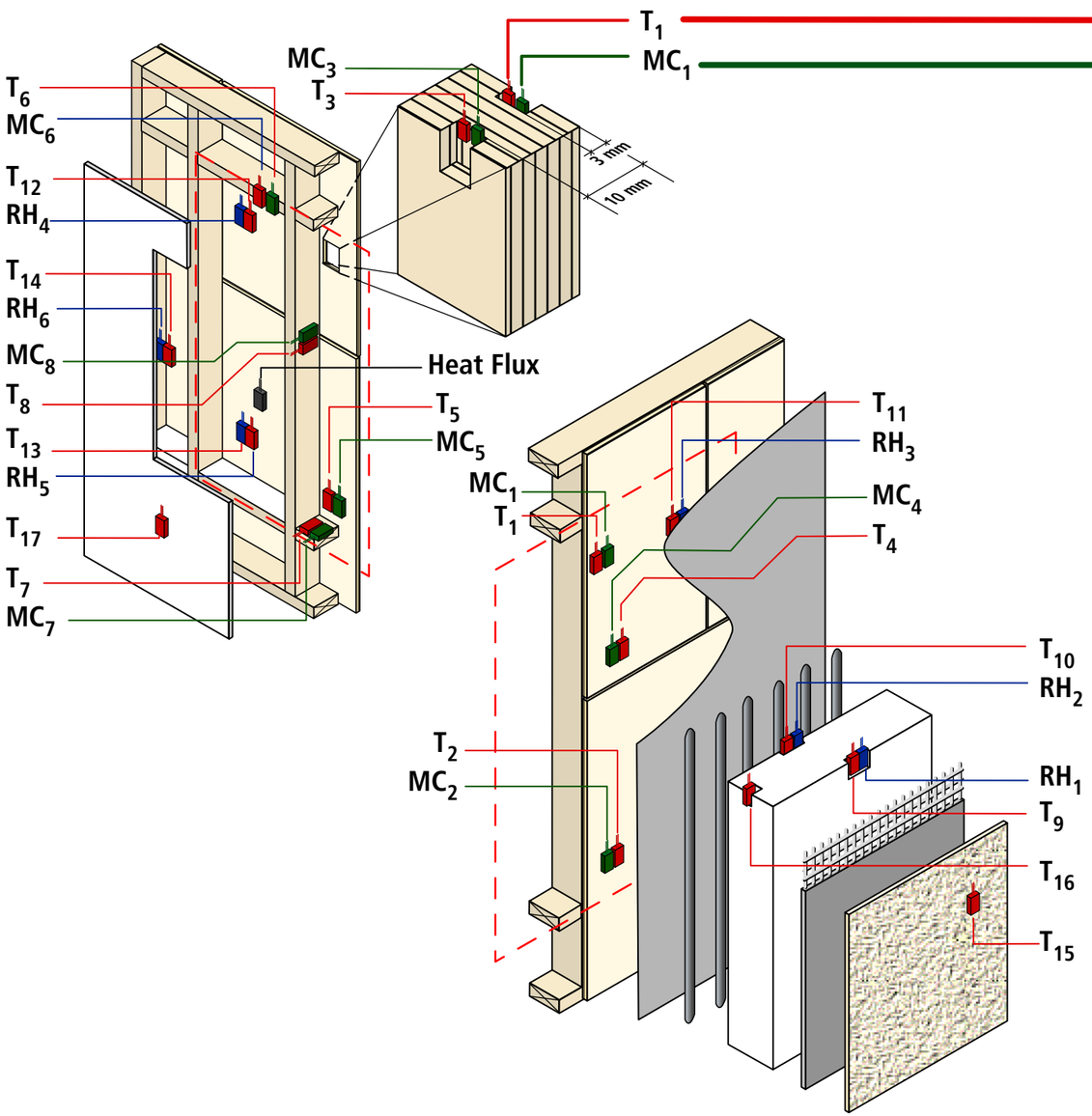
T1
MC1
MC3
T3
T6
MC6
T12
RH4
T14
RH6
MC8
T8
T13
RH5
T17
T7
MC7
3 mm
10 mm
Heat Flux
T5
MC5
MC1
T1
T11
RH3
MC4
T4
T10
RH2
T2
MC2
RH1
T9
T16
T15

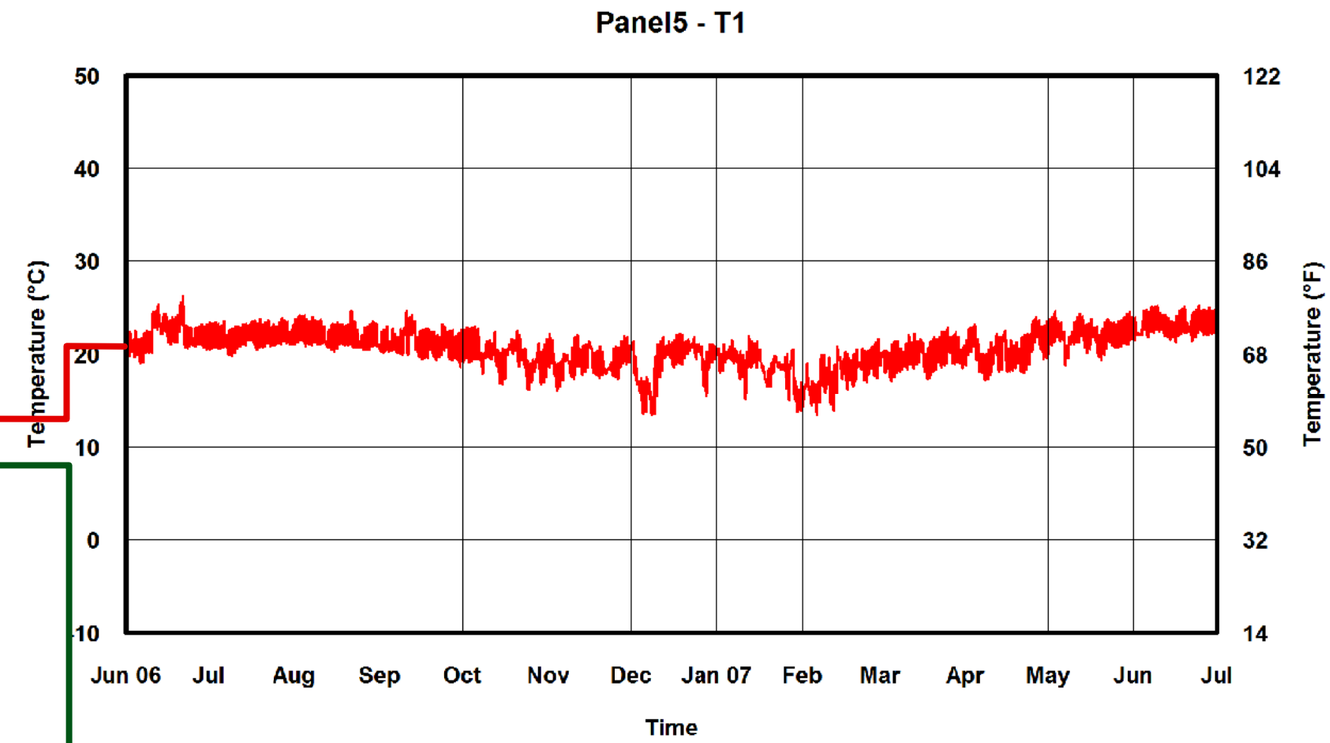
Panel5 - T1
Temperature (°C)
Temperature (°F)
50
40
30
20
10
0
-10
122
104
86
68
50
32
14
Jun 06
Jul
Aug
Sep
Oct
Nov
Dec
Jan 07
Feb
Mar
Apr
May
Jun
Jul
Time

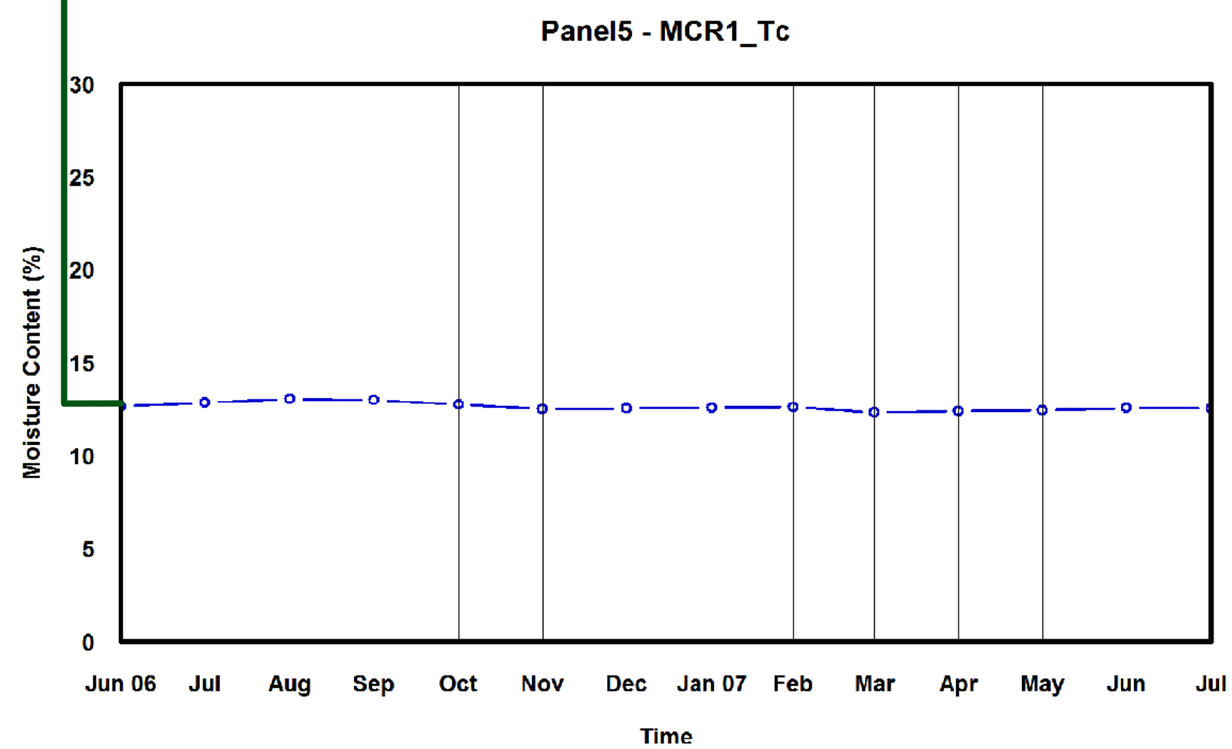
Panel5 - MCR1_Tc
Moisture Content (%)
30
25
20
15
10
5
0
Jun 06
Jul
Aug
Sep
Oct
Nov
Dec
Jan 07
Feb
Mar
Apr
May
Jun
Jul
Time

Panel 5

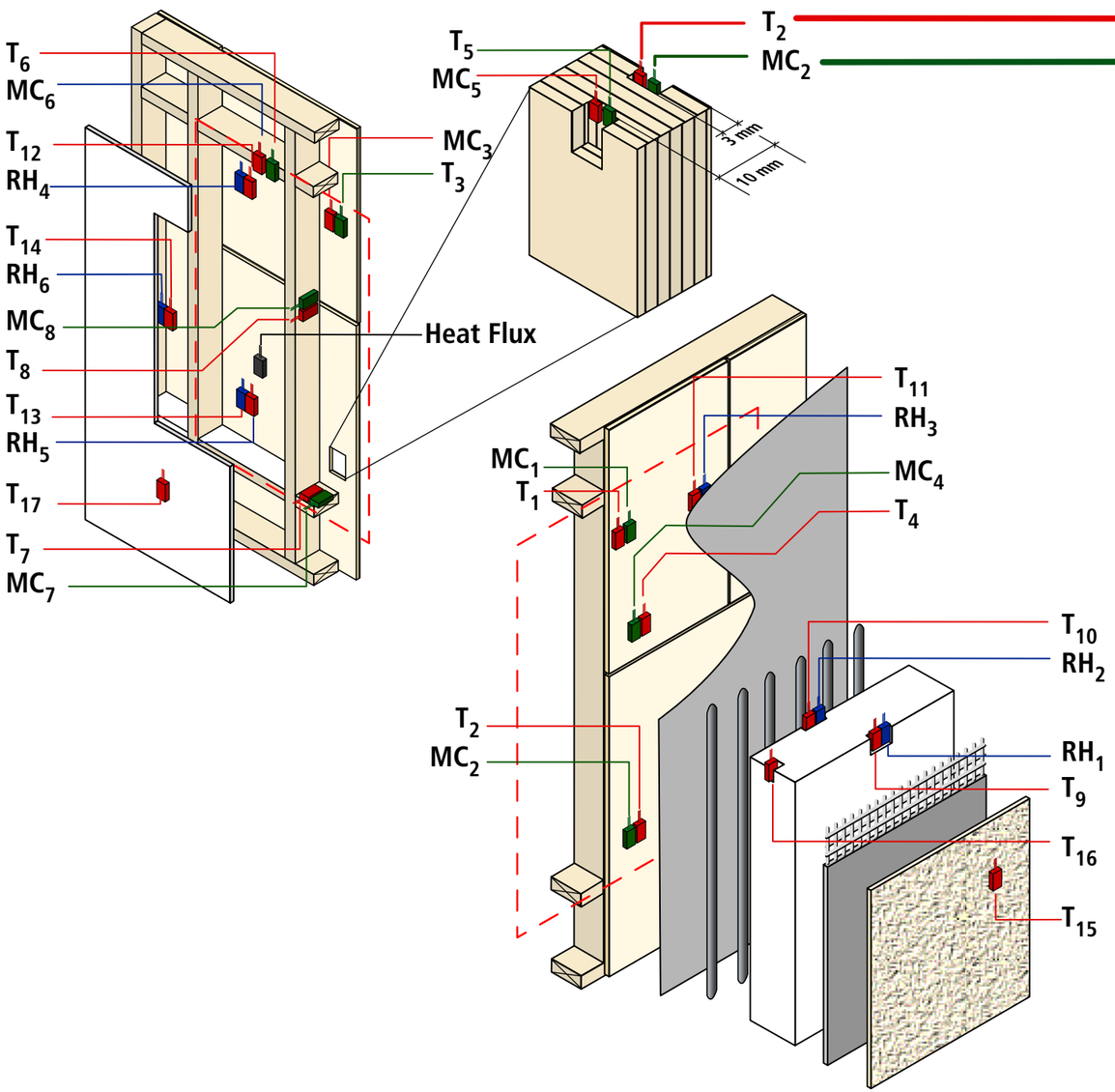
T6
MC6
T12
RH4
T14
RH6
MC8
T8
T13
RH5
T17
T7
MC7
T5
MC5
T2
MC2
MC3
T3
3 mm
10 mm
Heat Flux
T11
RH3
MC1
T1
MC4
T4
T10
RH2
T2
MC2
RH1
T9
T16
T15

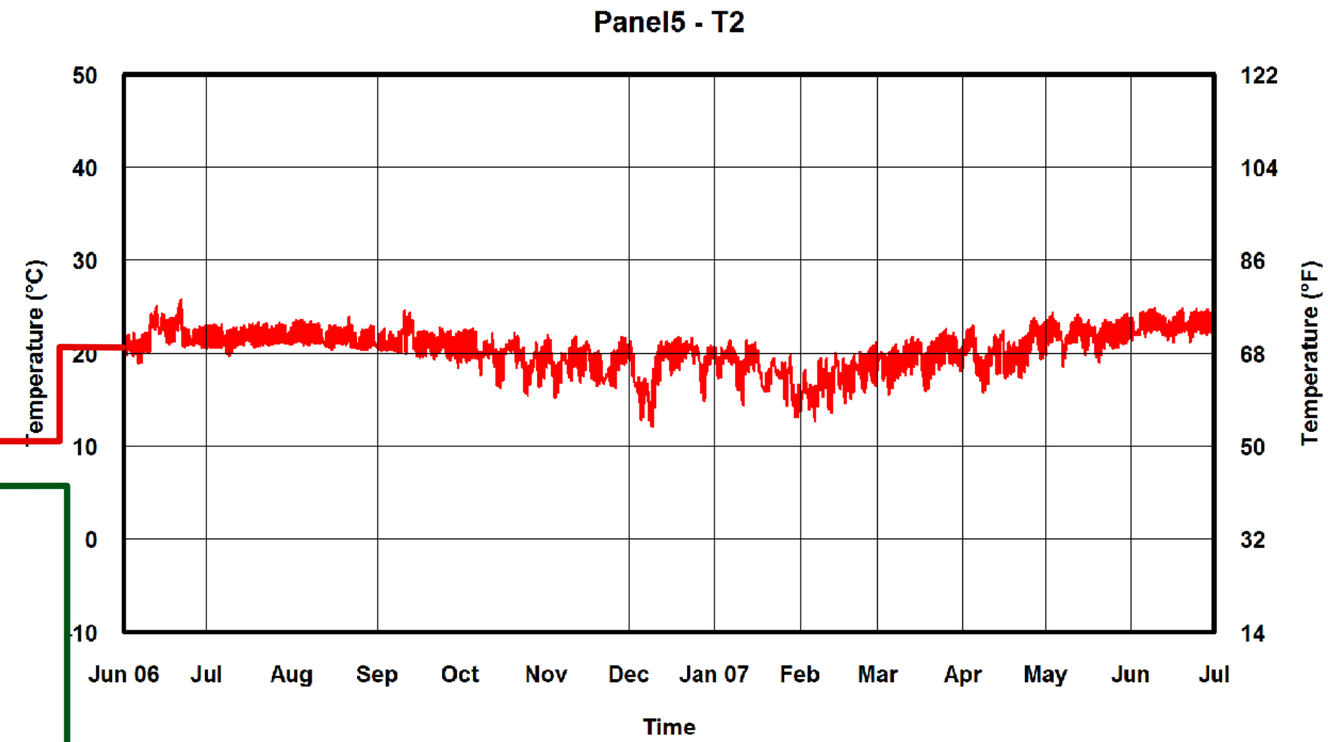
Panel5 - T2
Temperature (°C)
Temperature (°F)
50
40
30
20
10
0
-10
122
104
86
68
50
32
14
Jun 06
Jul
Aug
Sep
Oct
Nov
Dec
Jan 07
Feb
Mar
Apr
May
Jun
Jul
Time

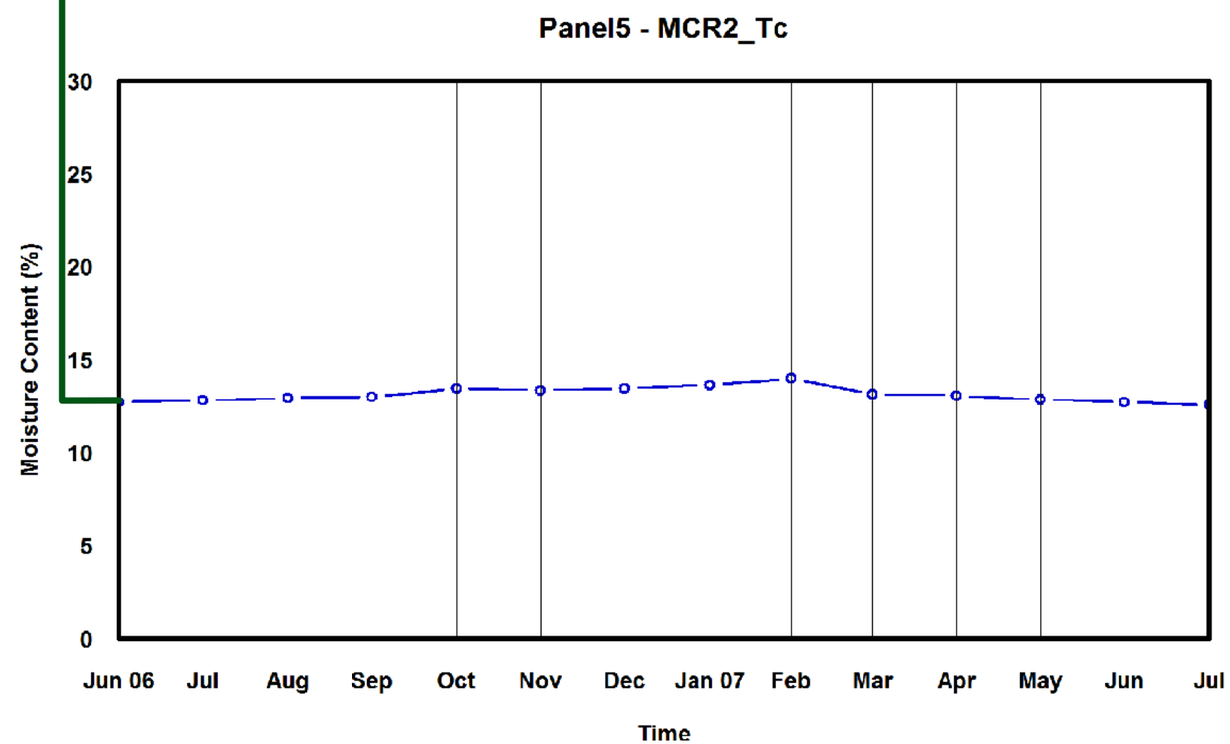
Panel5 - MCR2_Tc
Moisture Content (%)
30
25
20
15
10
5
0
Jun 06
Jul
Aug
Sep
Oct
Nov
Dec
Jan 07
Feb
Mar
Apr
May
Jun
Jul
Time

Panel 5

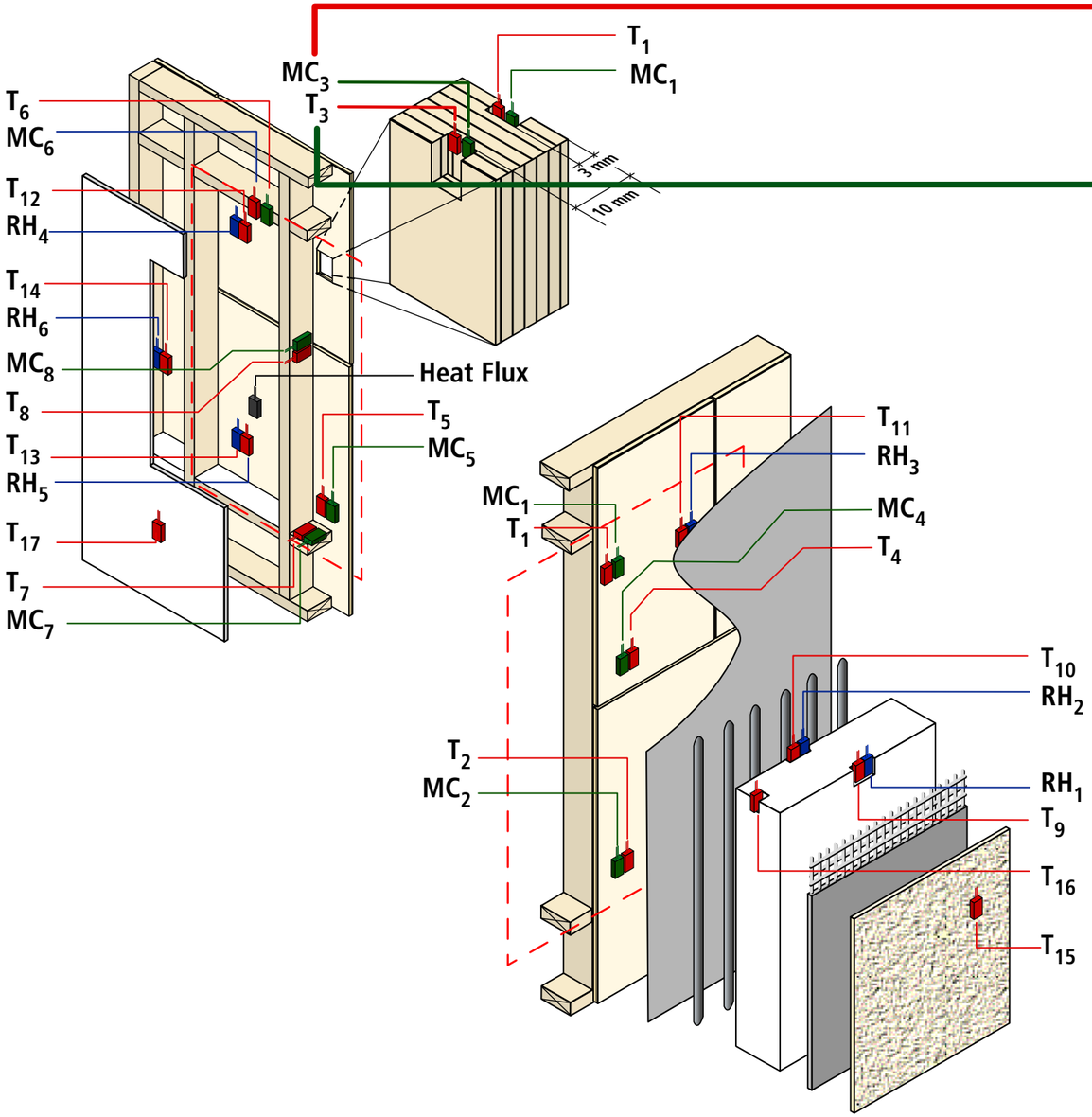
T_6
MC_6
T_{12}
RH_4
T_{14}
RH_6
MC_8
T_8
T_{13}
RH_5
T_{17}
T_7
MC_7
MC_3
T_3
T_1
MC_1
3 mm
10 mm
Heat Flux
T_5
MC_5
MC_1
T_1
T_{11}
RH_3
MC_4
T_4
T_{10}
RH_2
T_2
MC_2
RH_1
T_9
T_{16}
T_{15}

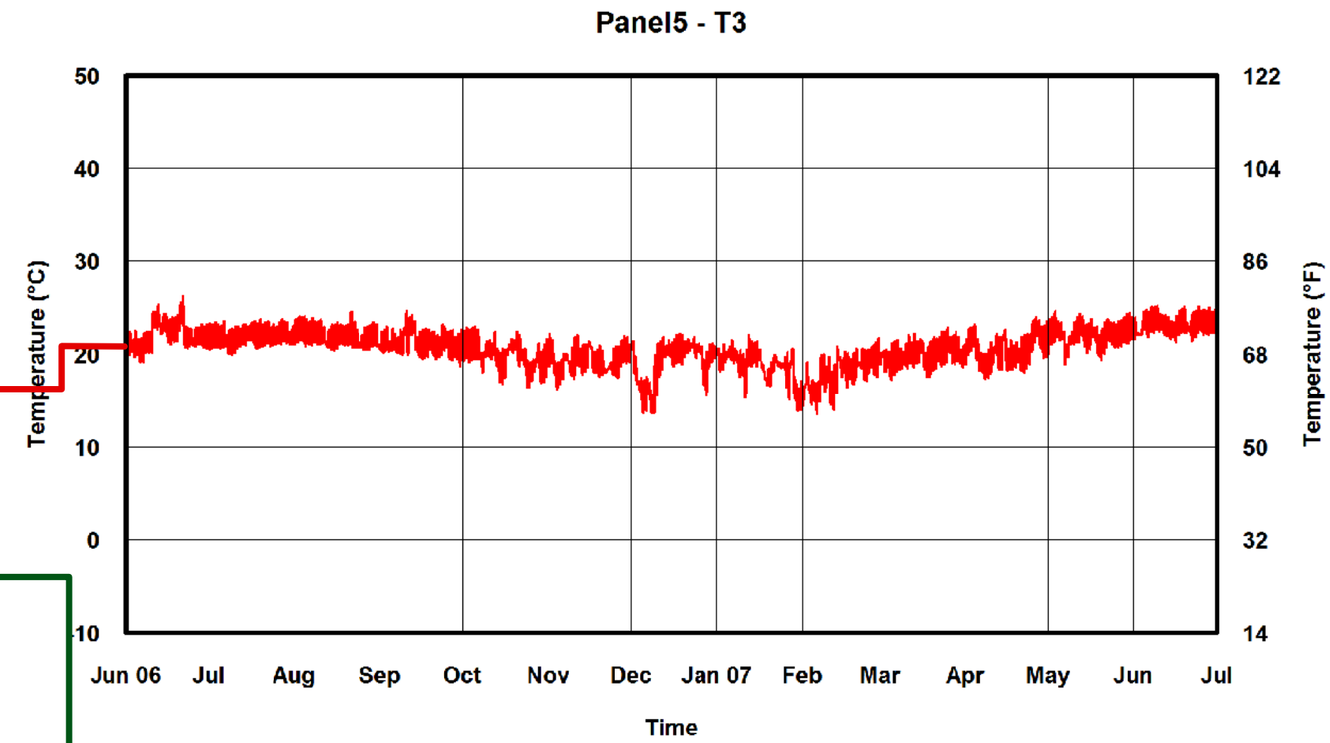
Panel5 - T3
Temperature (°C)
Temperature (°F)
50
40
30
20
10
0
-10
122
104
86
68
50
32
14
Jun 06
Jul
Aug
Sep
Oct
Nov
Dec
Jan 07
Feb
Mar
Apr
May
Jun
Jul
Time

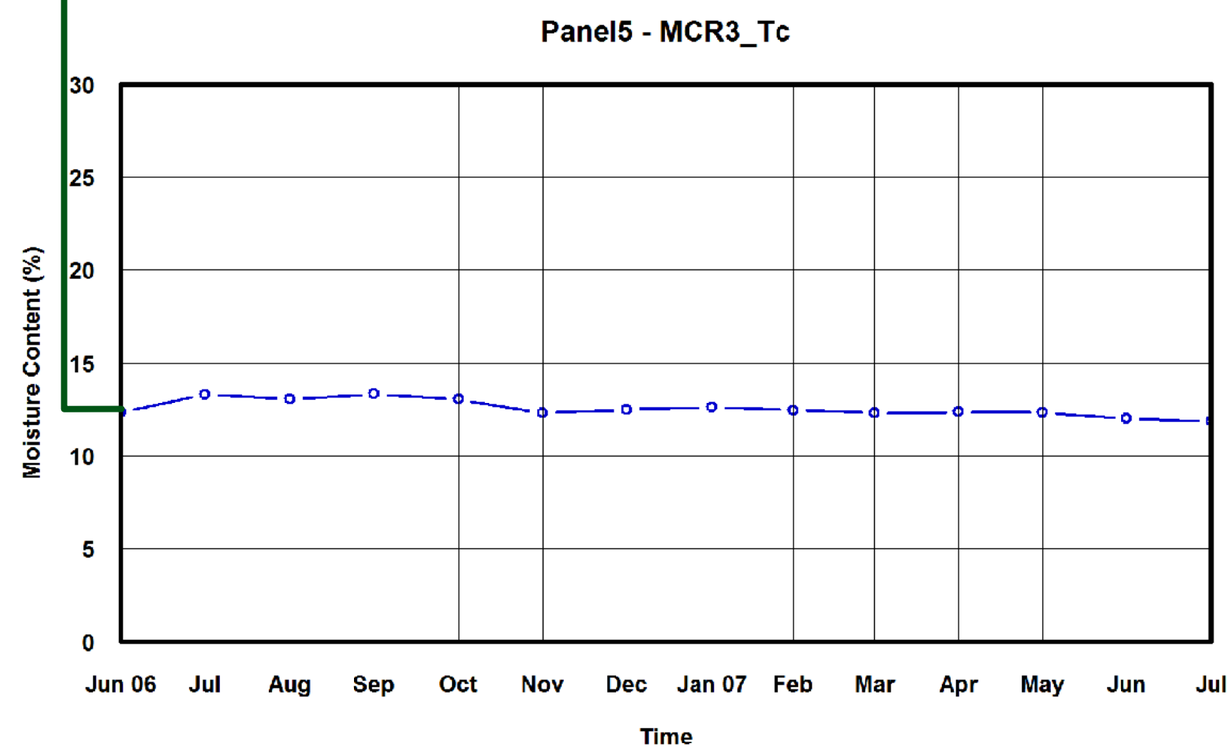
Panel5 - MCR3_Tc
Moisture Content (%)
30
25
20
15
10
5
0
Jun 06
Jul
Aug
Sep
Oct
Nov
Dec
Jan 07
Feb
Mar
Apr
May
Jun
Jul
Time

Panel 5

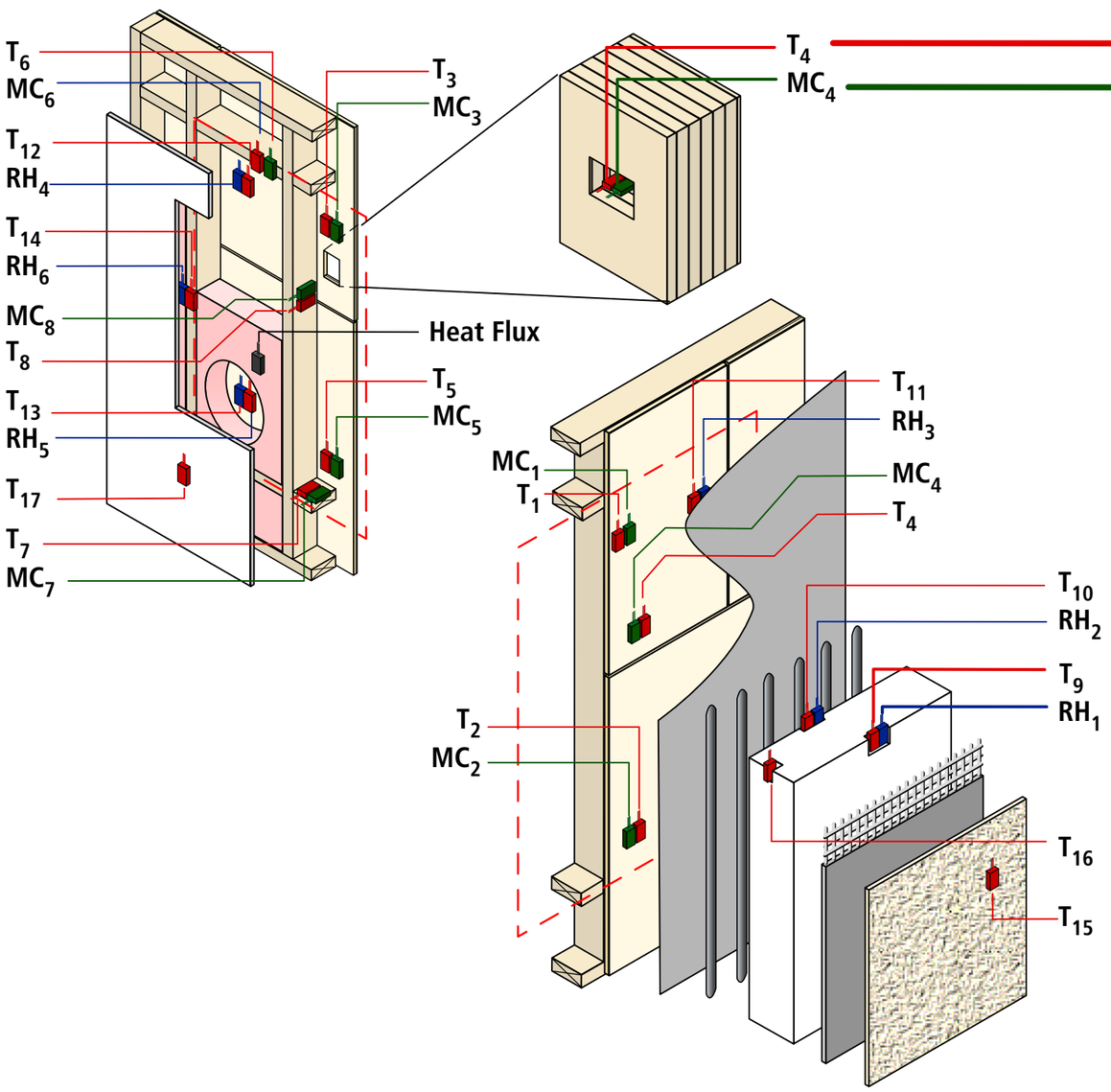
T_6
MC_6
T_{12}
RH_4
T_{14}
RH_6
MC_8
T_8
T_{13}
RH_5
T_{17}
T_7
MC_7
T_3
MC_3
Heat Flux
T_5
MC_5
T_4
MC_4
MC_1
T_1
T_2
MC_2
T_{11}
RH_3
MC_4
T_4
T_{10}
RH_2
T_9
RH_1
T_{16}
T_{15}

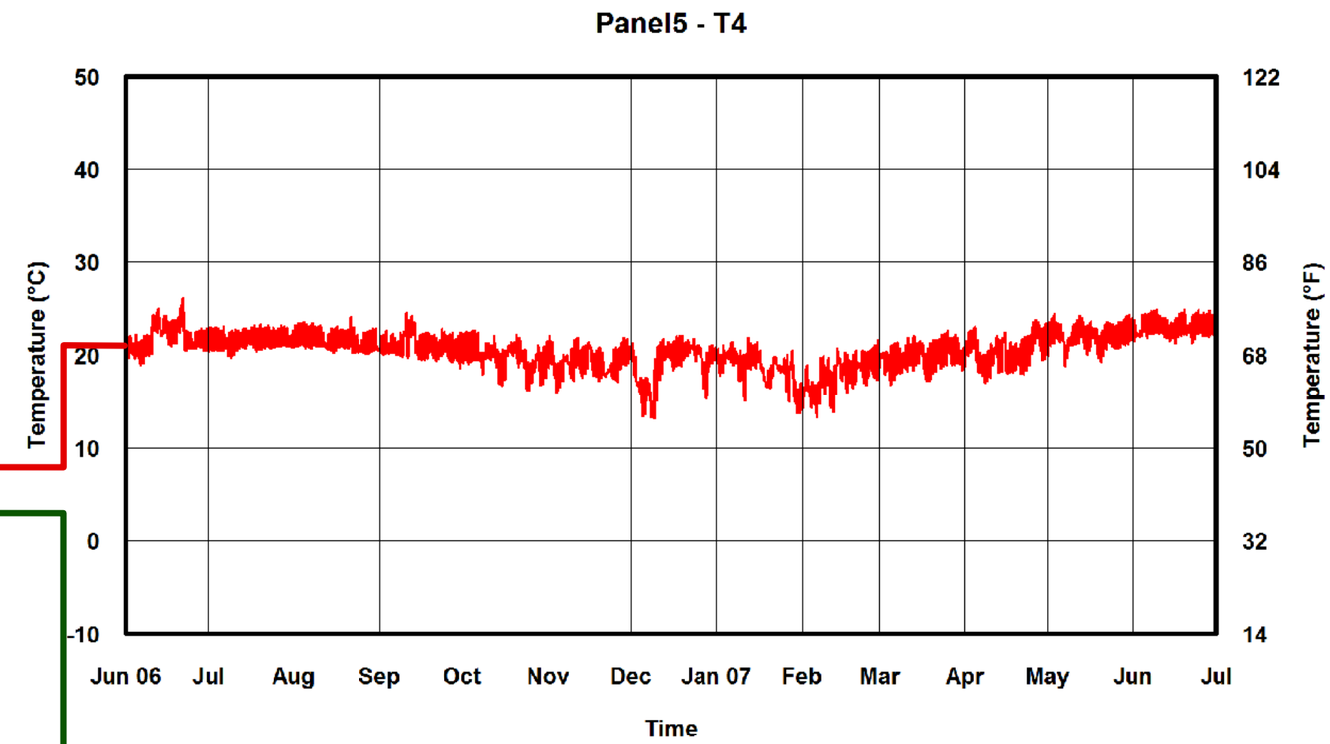
Panel5 - T4
Temperature (°C)
Temperature (°F)
50
40
30
20
10
0
-10
122
104
86
68
50
32
14
Jun 06
Jul
Aug
Sep
Oct
Nov
Dec
Jan 07
Feb
Mar
Apr
May
Jun
Jul
Time

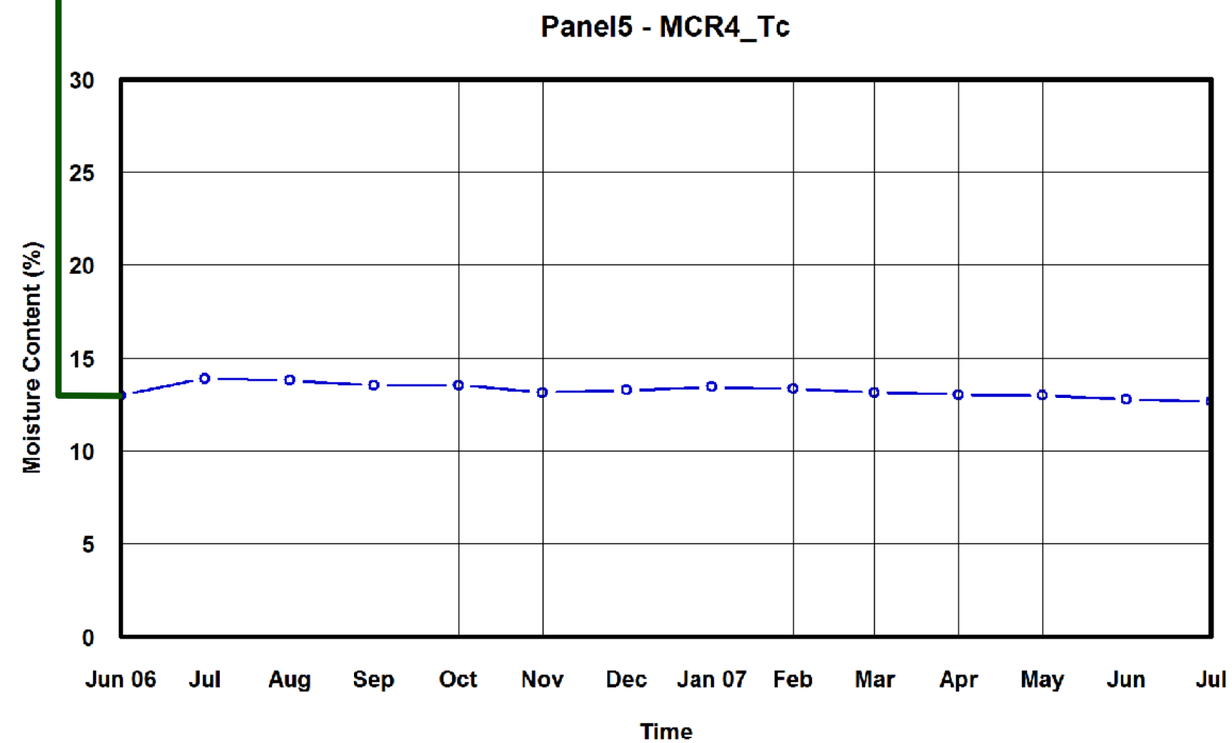
Panel5 - MCR4_Tc
Moisture Content (%)
30
25
20
15
10
5
0
Jun 06
Jul
Aug
Sep
Oct
Nov
Dec
Jan 07
Feb
Mar
Apr
May
Jun
Jul
Time

Panel 5

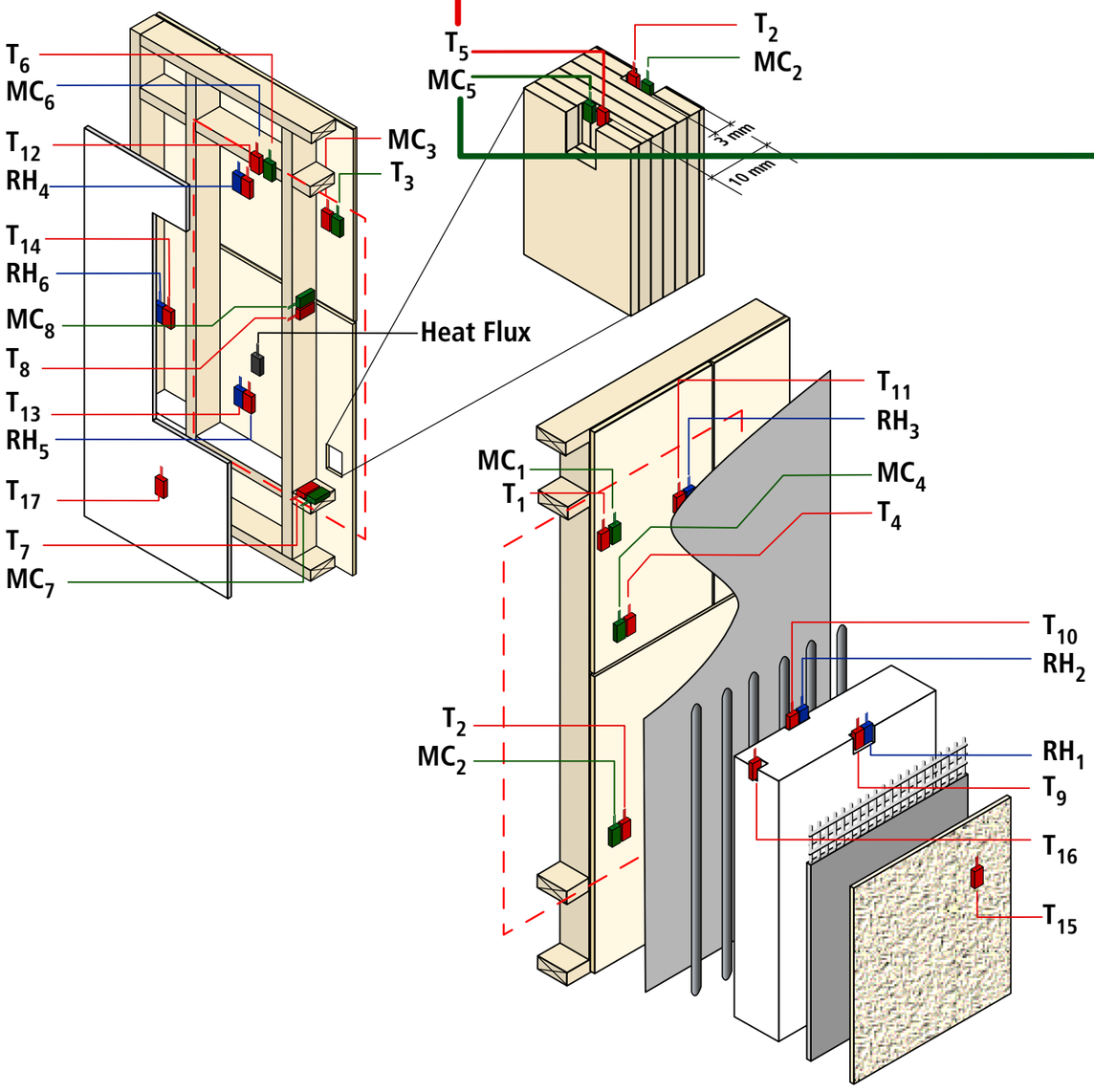
T_6
MC_6
T_{12}
RH_4
T_{14}
RH_6
MC_8
T_8
T_{13}
RH_5
T_{17}
T_7
MC_7
MC_3
T_3
Heat Flux
T_5
MC_5
T_2
MC_2
3 mm
10 mm
T_{11}
RH_3
MC_4
T_4
MC_1
T_1
T_{10}
RH_2
T_2
MC_2
RH_1
T_9
T_{16}
T_{15}

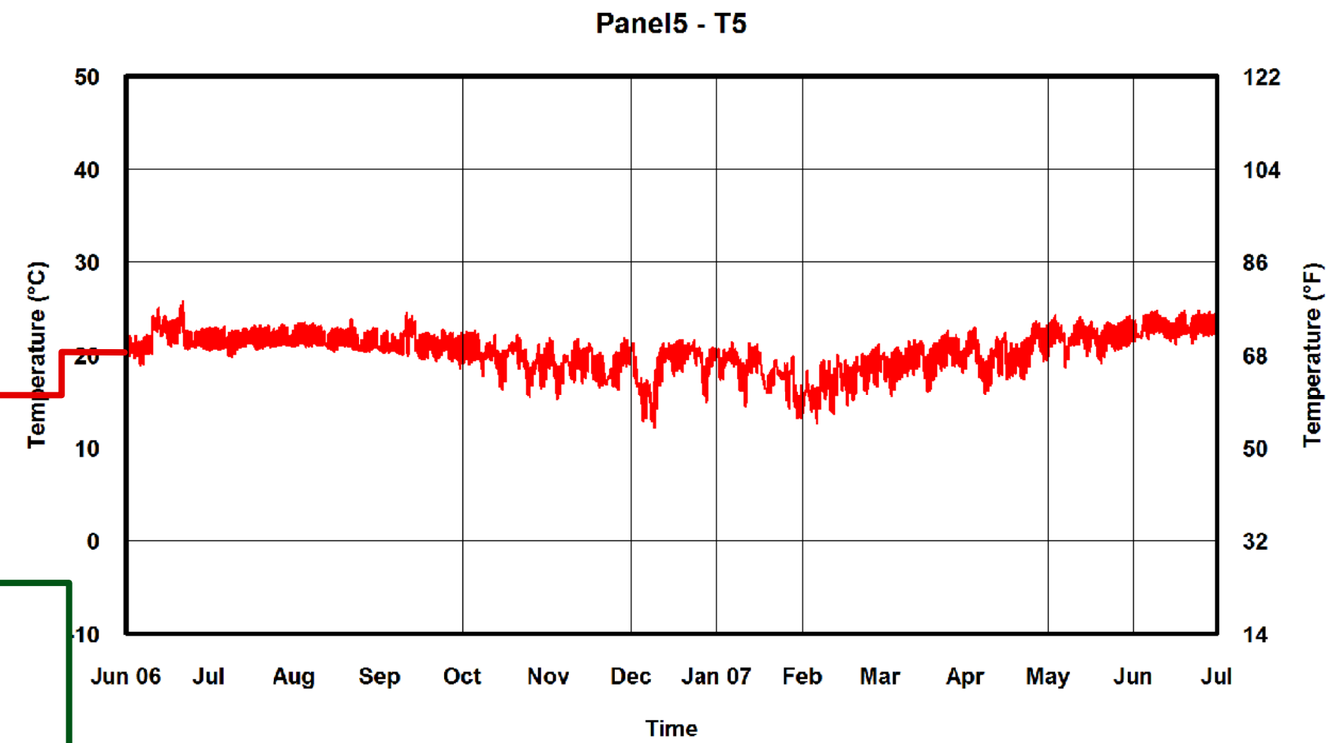
Panel5 - T5
Temperature (°C)
Temperature (°F)
50
40
30
20
10
0
-10
122
104
86
68
50
32
14
Jun 06
Jul
Aug
Sep
Oct
Nov
Dec
Jan 07
Feb
Mar
Apr
May
Jun
Jul
Time

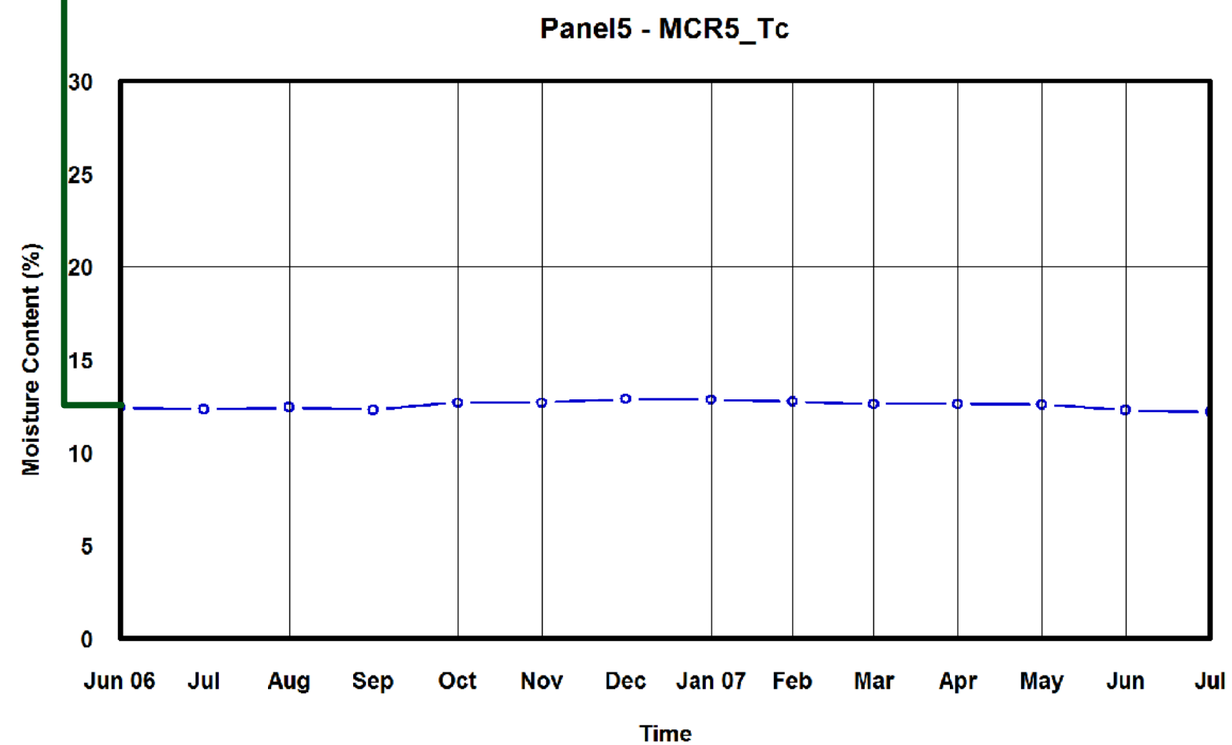
Panel5 - MCR5_Tc
Moisture Content (%)
30
25
20
15
10
5
0
Jun 06
Jul
Aug
Sep
Oct
Nov
Dec
Jan 07
Feb
Mar
Apr
May
Jun
Jul
Time

Panel 5

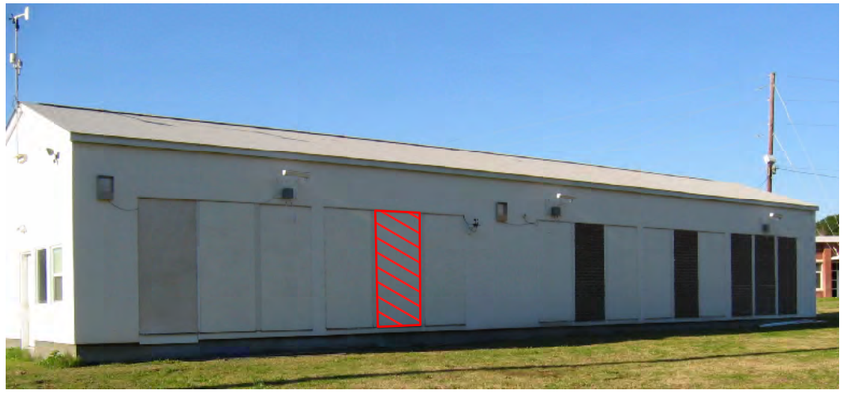

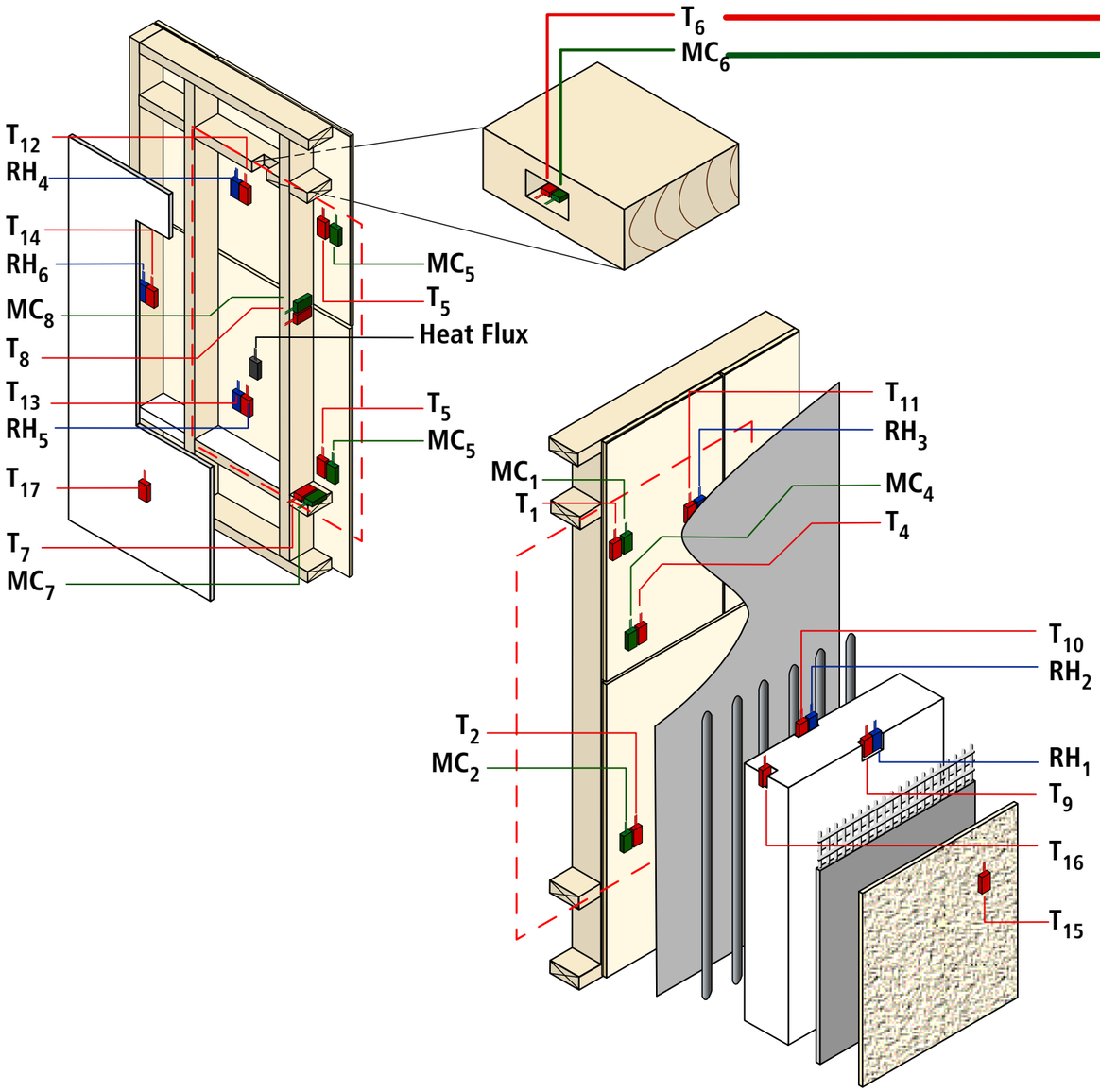
T_6
MC_6
T_{12}
RH_4
T_{14}
RH_6
MC_8
T_8
T_{13}
RH_5
T_{17}
T_7
MC_7
MC_5
T_5
Heat Flux
T_5
MC_5
T_{11}
RH_3
MC_1
T_1
MC_4
T_4
T_{10}
RH_2
T_2
MC_2
RH_1
T_9
T_{16}
T_{15}

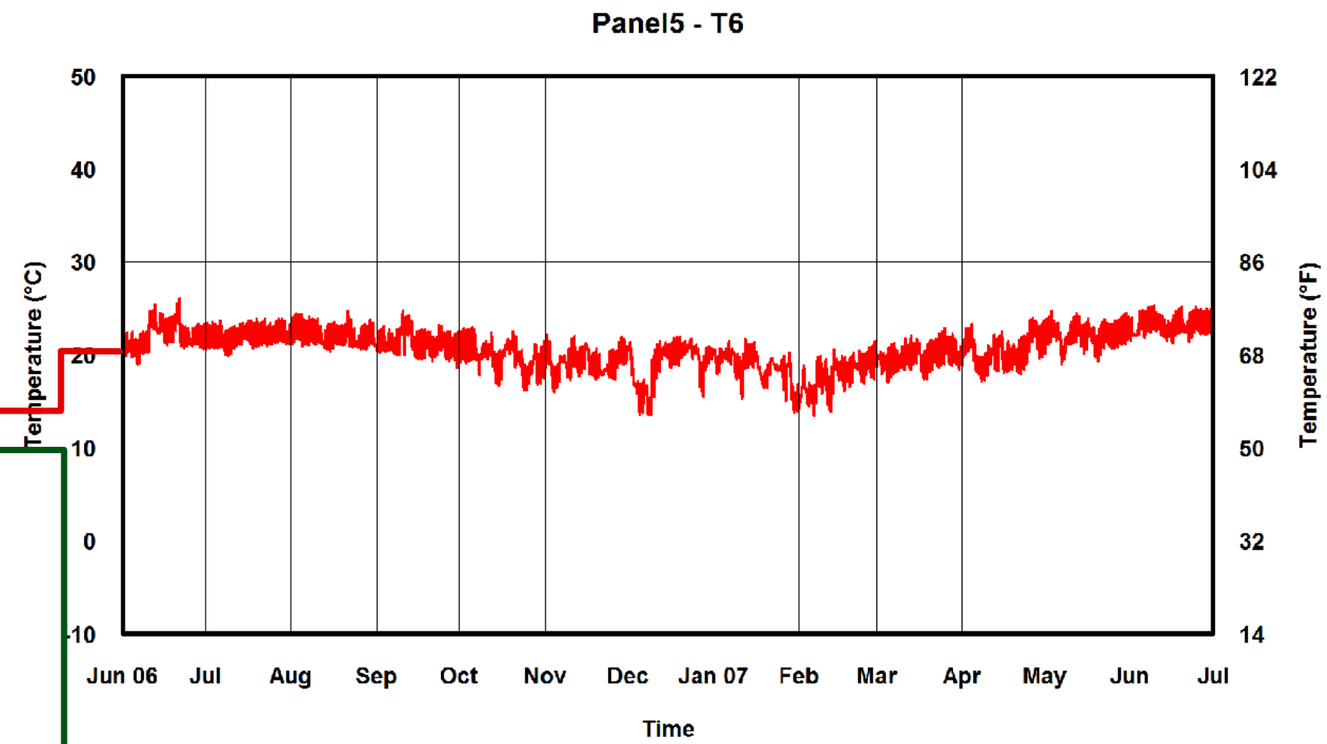
Panel5 - T6
Temperature (°C)
50
40
30
20
10
0
-10
Temperature (°F)
122
104
86
68
50
32
14
Jun 06
Jul
Aug
Sep
Oct
Nov
Dec
Jan 07
Feb
Mar
Apr
May
Jun
Jul
Time

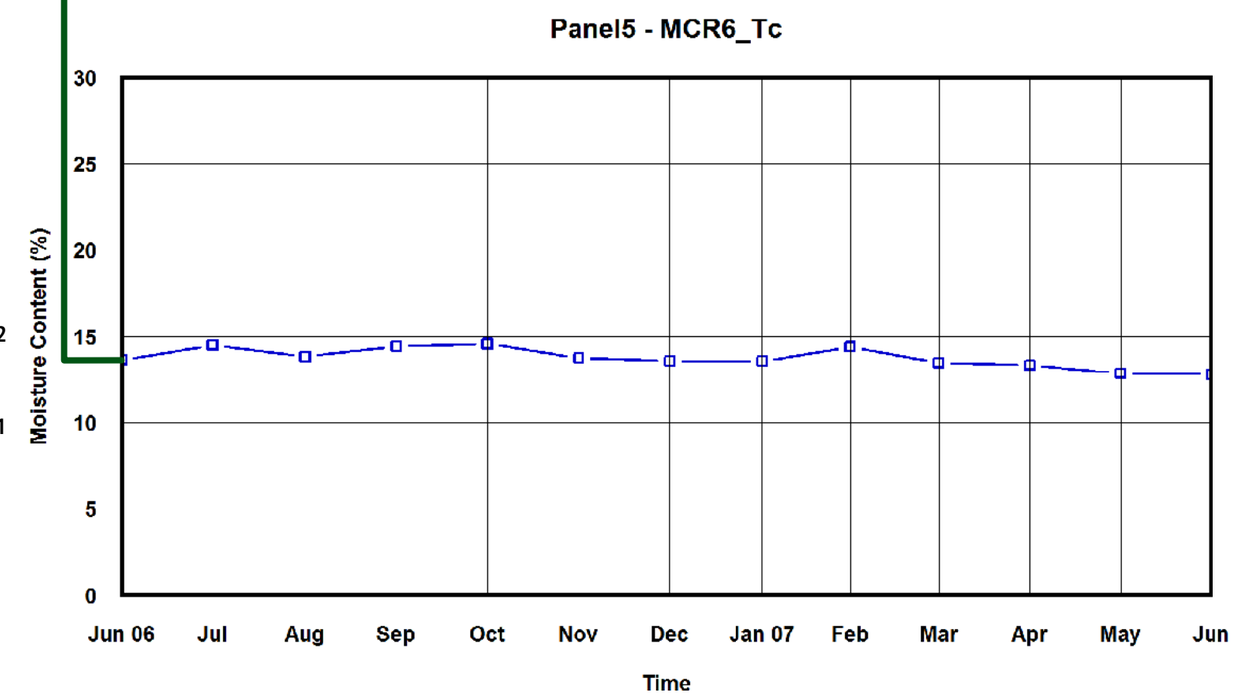
Panel5 - MCR6_Tc
Moisture Content (%)
30
25
20
15
10
5
0
Jun 06
Jul
Aug
Sep
Oct
Nov
Dec
Jan 07
Feb
Mar
Apr
May
Jun
Time

Panel 5

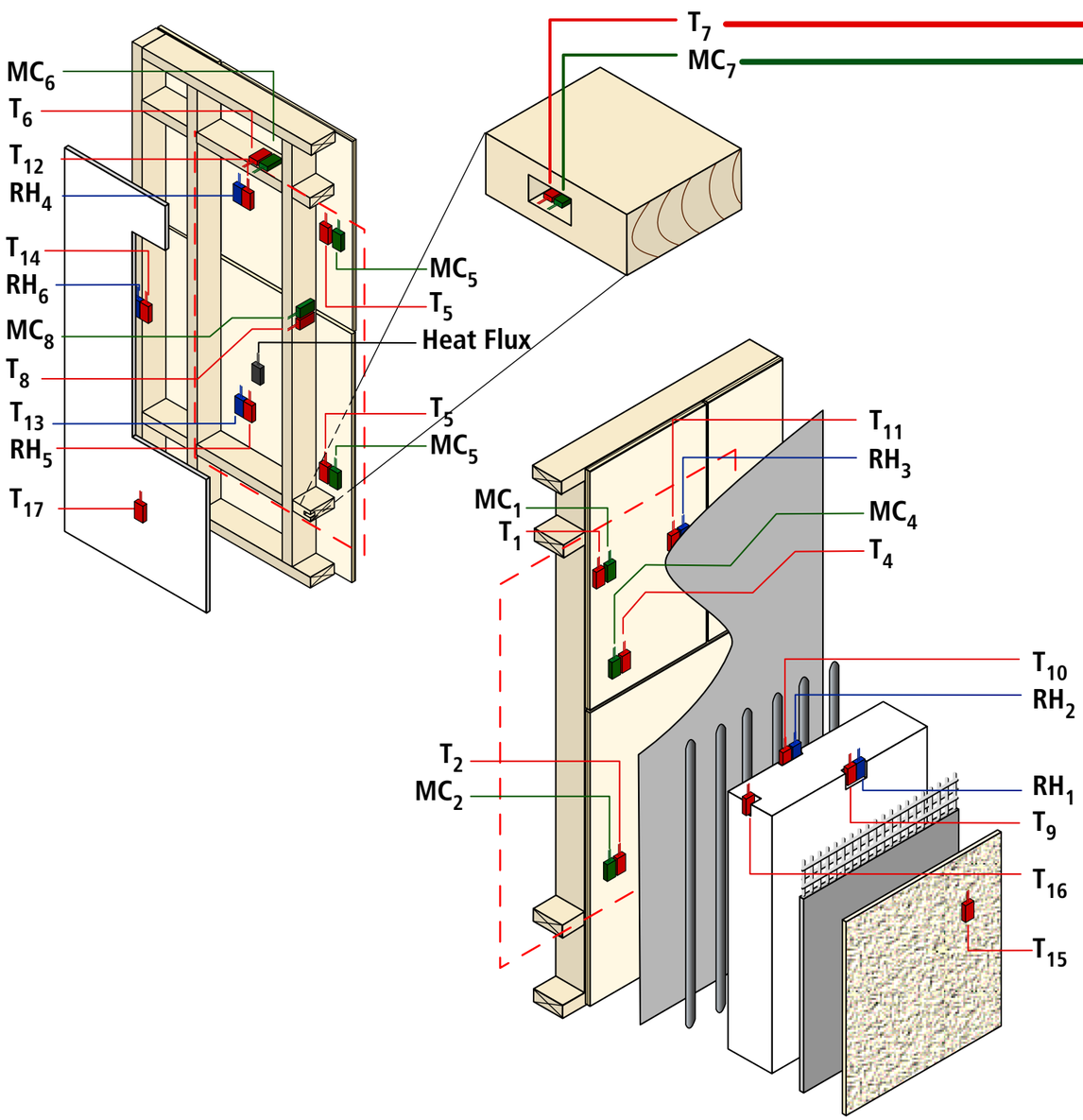
MC_6
T_6
T_{12}
RH_4
T_{14}
RH_6
MC_8
T_8
T_{13}
RH_5
T_{17}
MC_5
T_5
Heat Flux
T_5
MC_5
T_7
MC_7
T_{11}
RH_3
MC_4
T_4
MC_1
T_1
T_{10}
RH_2
T_2
MC_2
RH_1
T_9
T_{16}
T_{15}

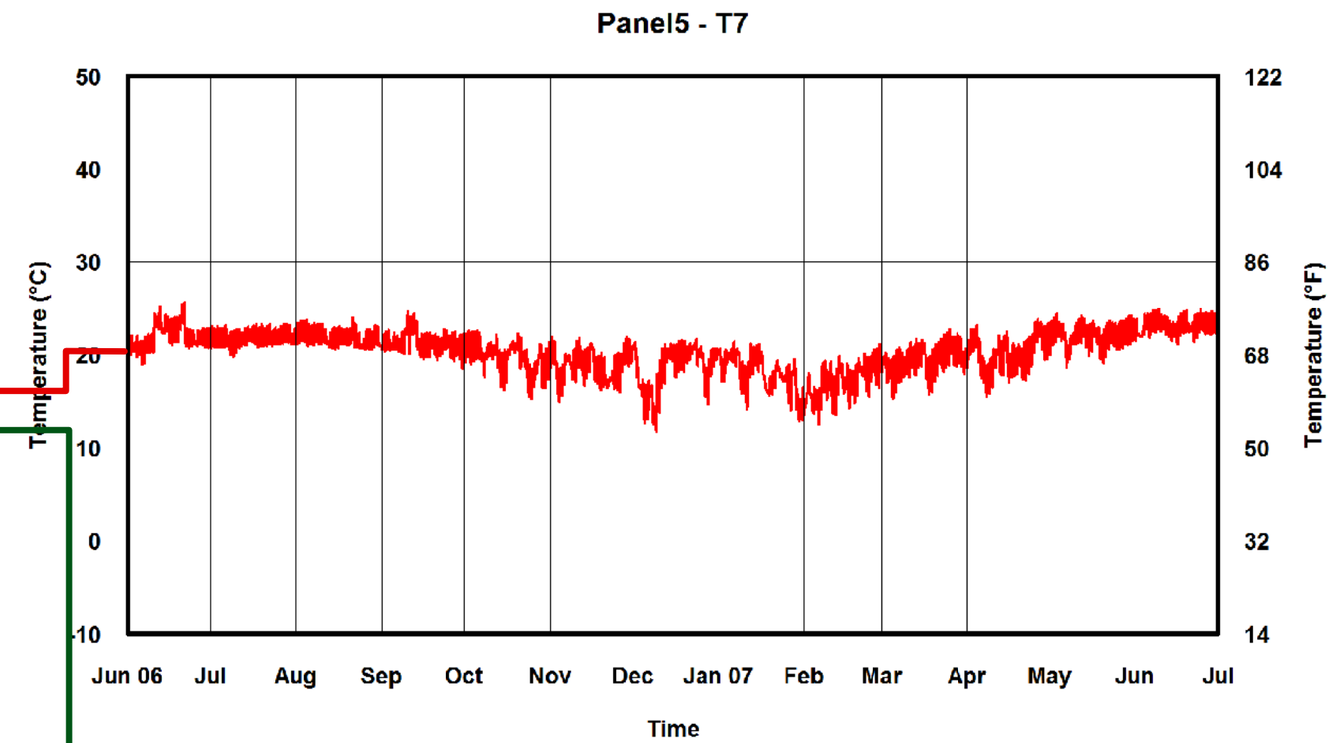
Panel5 - T7
Temperature (°C)
50
40
30
20
10
0
-10
Temperature (°F)
122
104
86
68
50
32
14
Jun 06
Jul
Aug
Sep
Oct
Nov
Dec
Jan 07
Feb
Mar
Apr
May
Jun
Jul
Time

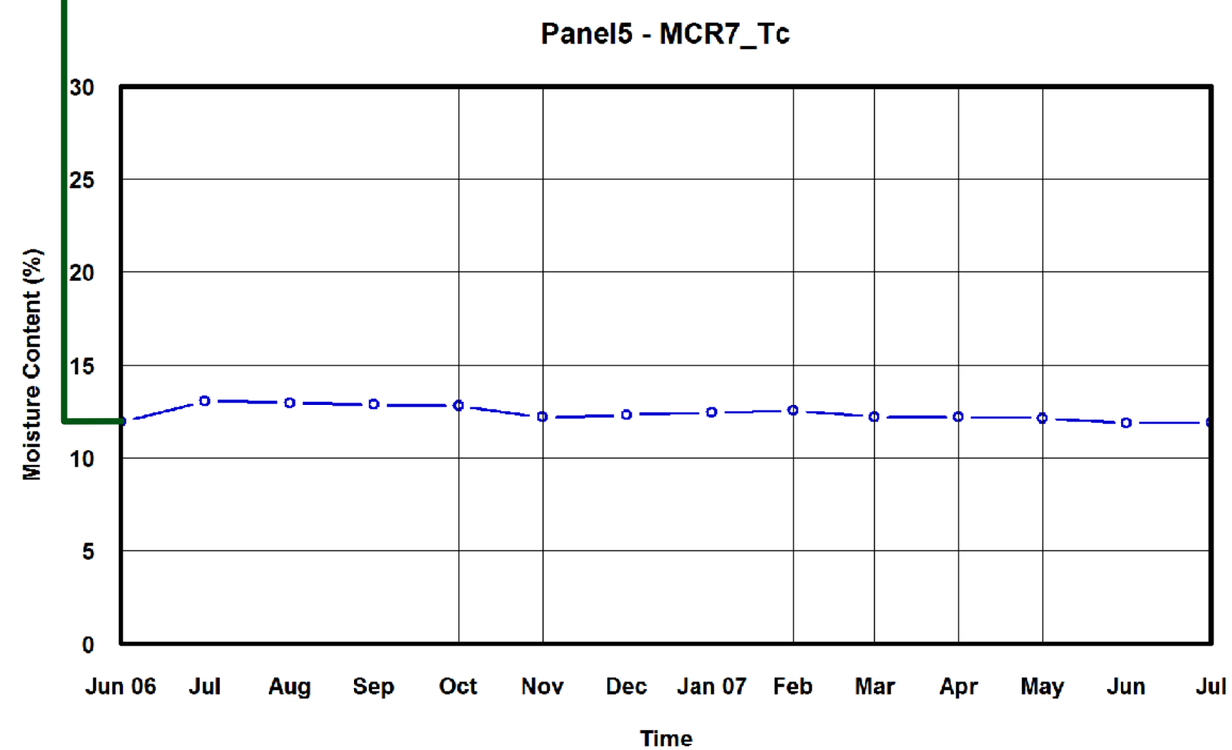
Panel5 - MCR7_Tc
Moisture Content (%)
30
25
20
15
10
5
0
Jun 06
Jul
Aug
Sep
Oct
Nov
Dec
Jan 07
Feb
Mar
Apr
May
Jun
Jul
Time

Panel 5

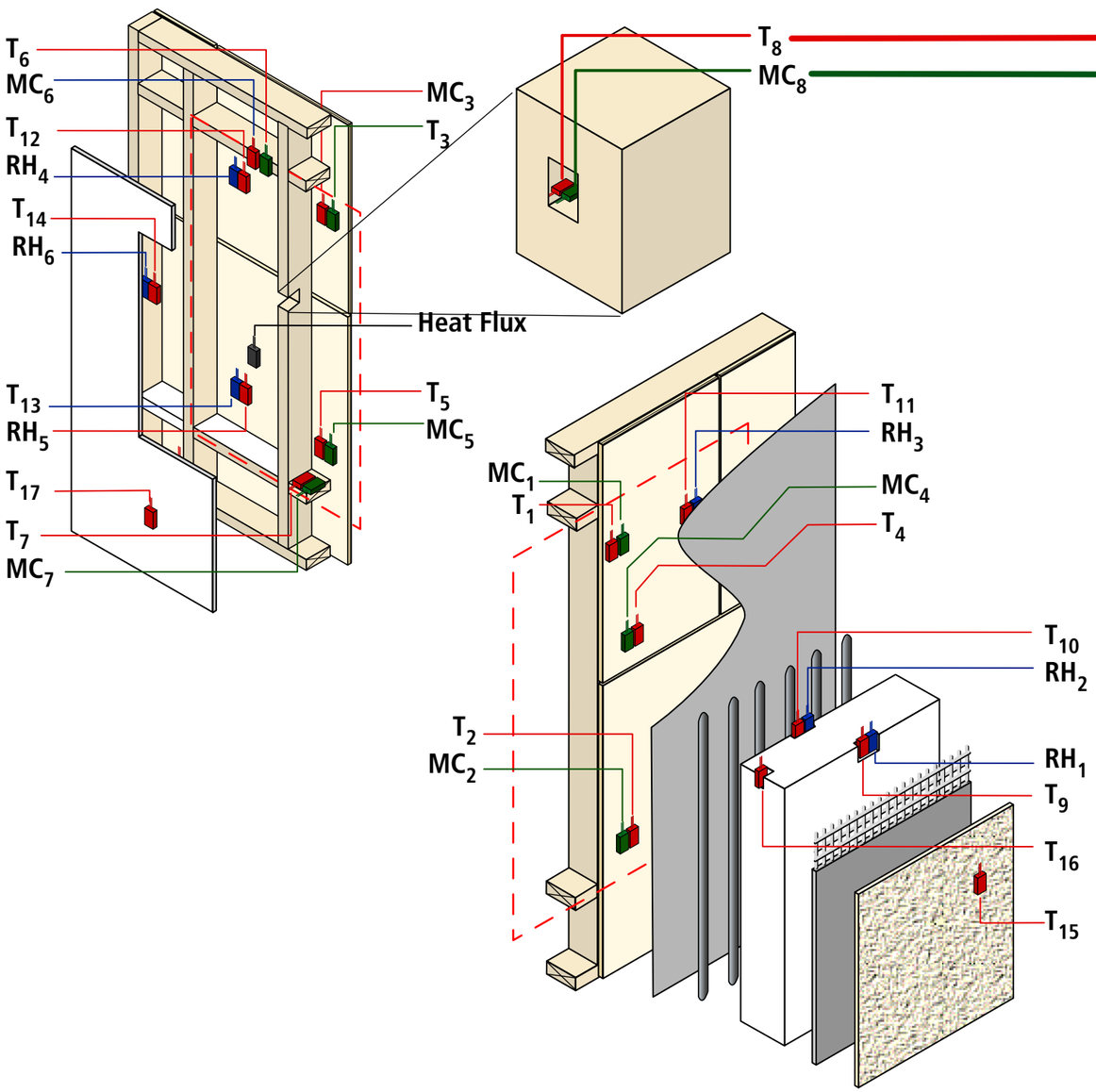
T_6
MC_6
T_{12}
RH_4
T_{14}
RH_6
MC_3
T_3
Heat Flux
T_{13}
RH_5
T_5
MC_5
T_{17}
T_7
MC_7
T_8
MC_8
T_{11}
RH_3
MC_1
T_1
MC_4
T_4
T_{10}
RH_2
T_2
MC_2
RH_1
T_9
T_{16}
T_{15}

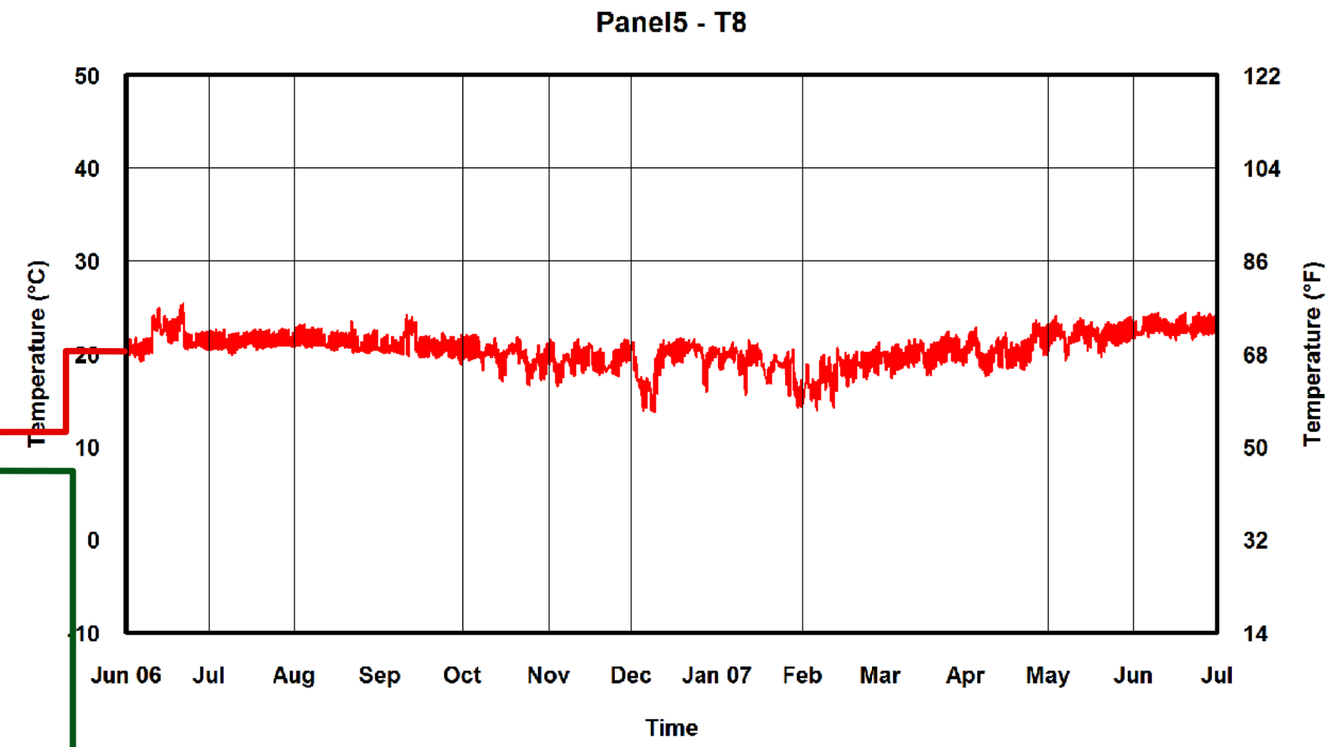
Panel5 - T8
Temperature (°C)
50
40
30
20
10
0
-10
Temperature (°F)
122
104
86
68
50
32
14
Jun 06
Jul
Aug
Sep
Oct
Nov
Dec
Jan 07
Feb
Mar
Apr
May
Jun
Jul
Time

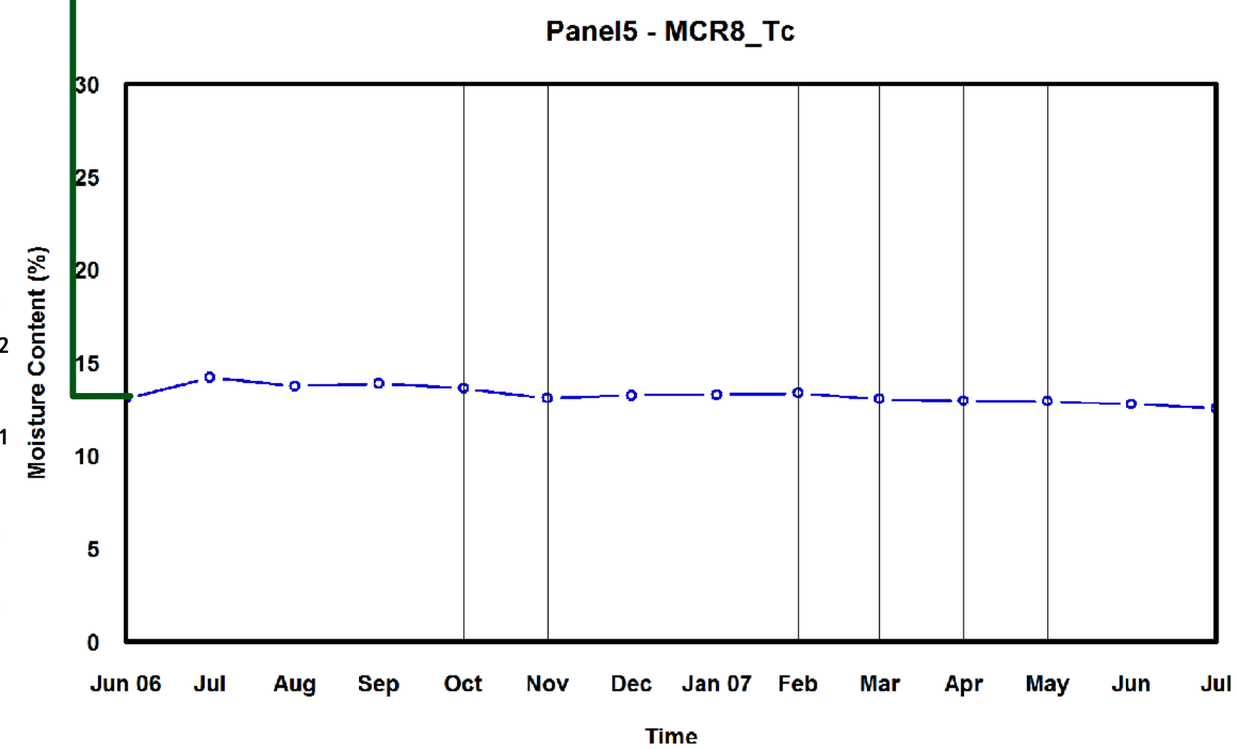
Panel5 - MCR8_Tc
Moisture Content (%)
30
25
20
15
10
5
0
Jun 06
Jul
Aug
Sep
Oct
Nov
Dec
Jan 07
Feb
Mar
Apr
May
Jun
Jul
Time

Panel 5

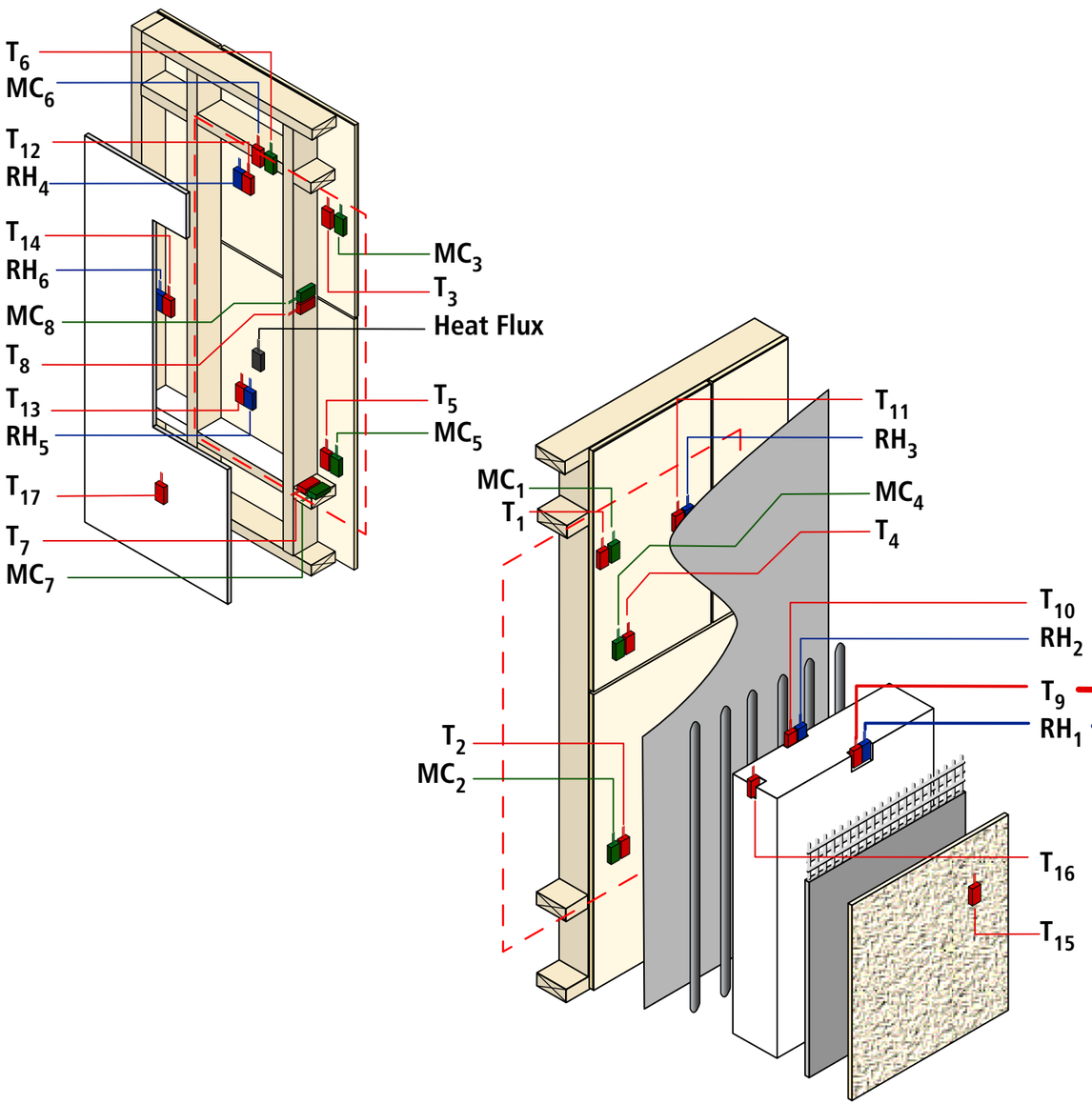
T_6
MC_6
T_{12}
RH_4
T_{14}
RH_6
MC_8
T_8
T_{13}
RH_5
T_{17}
T_7
MC_7
MC_3
T_3
Heat Flux
T_5
MC_5
MC_1
T_1
T_2
MC_2
T_{11}
RH_3
MC_4
T_4
T_{10}
RH_2
T_9
RH_1
T_{16}
T_{15}

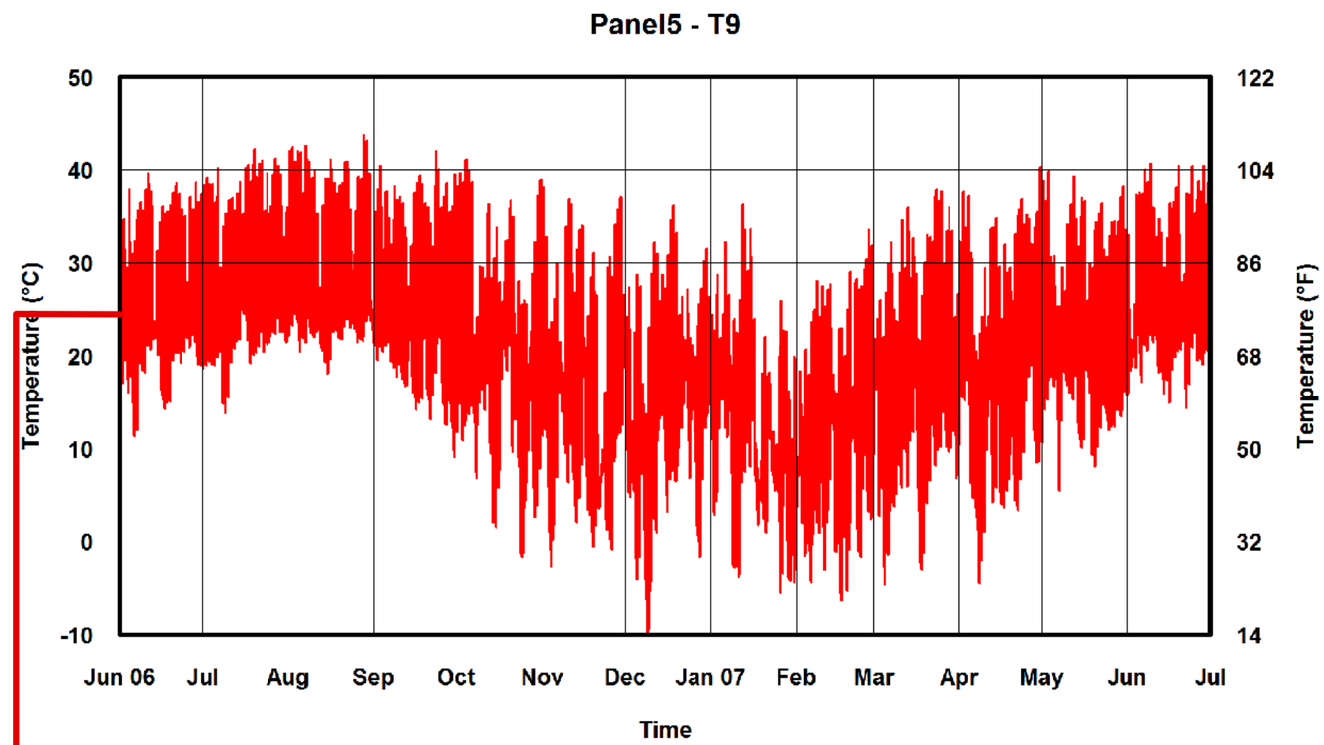
Panel5 - T9
Temperature (°C)
Temperature (°F)
50
40
30
20
10
0
-10
122
104
86
68
50
32
14
Jun 06
Jul
Aug
Sep
Oct
Nov
Dec
Jan 07
Feb
Mar
Apr
May
Jun
Jul
Time

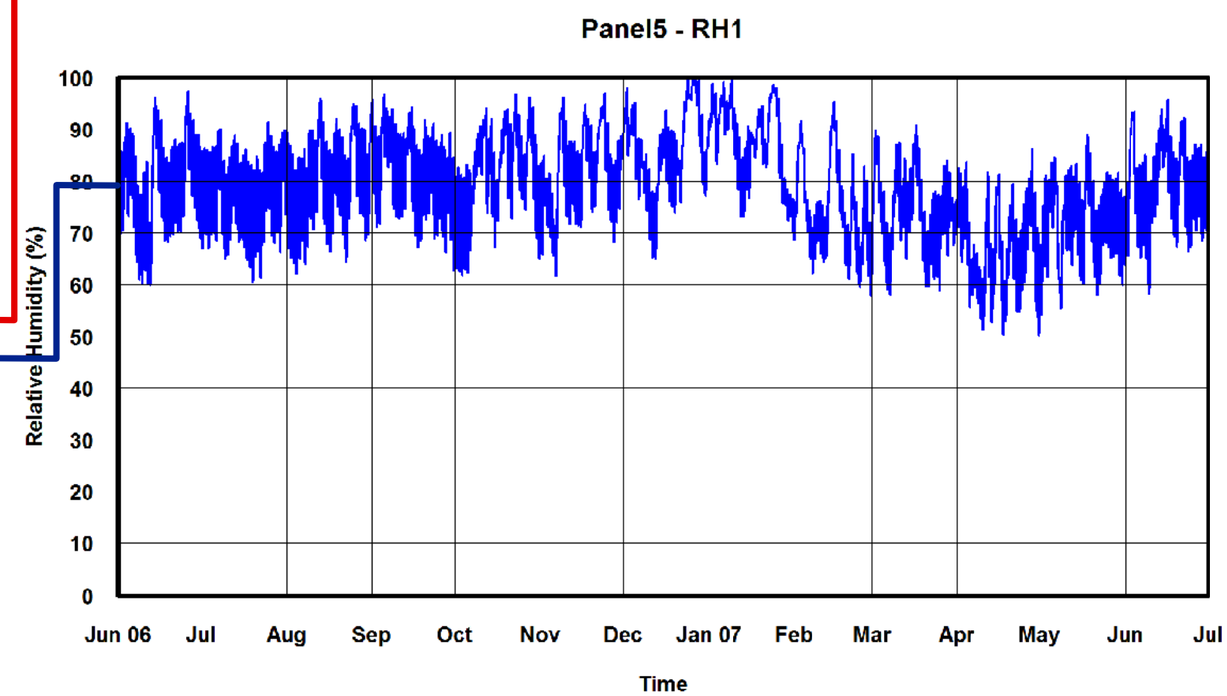
Panel5 - RH1
Relative Humidity (%)
100
90
80
70
60
50
40
30
20
10
0
Jun 06
Jul
Aug
Sep
Oct
Nov
Dec
Jan 07
Feb
Mar
Apr
May
Jun
Jul
Time

Panel 5

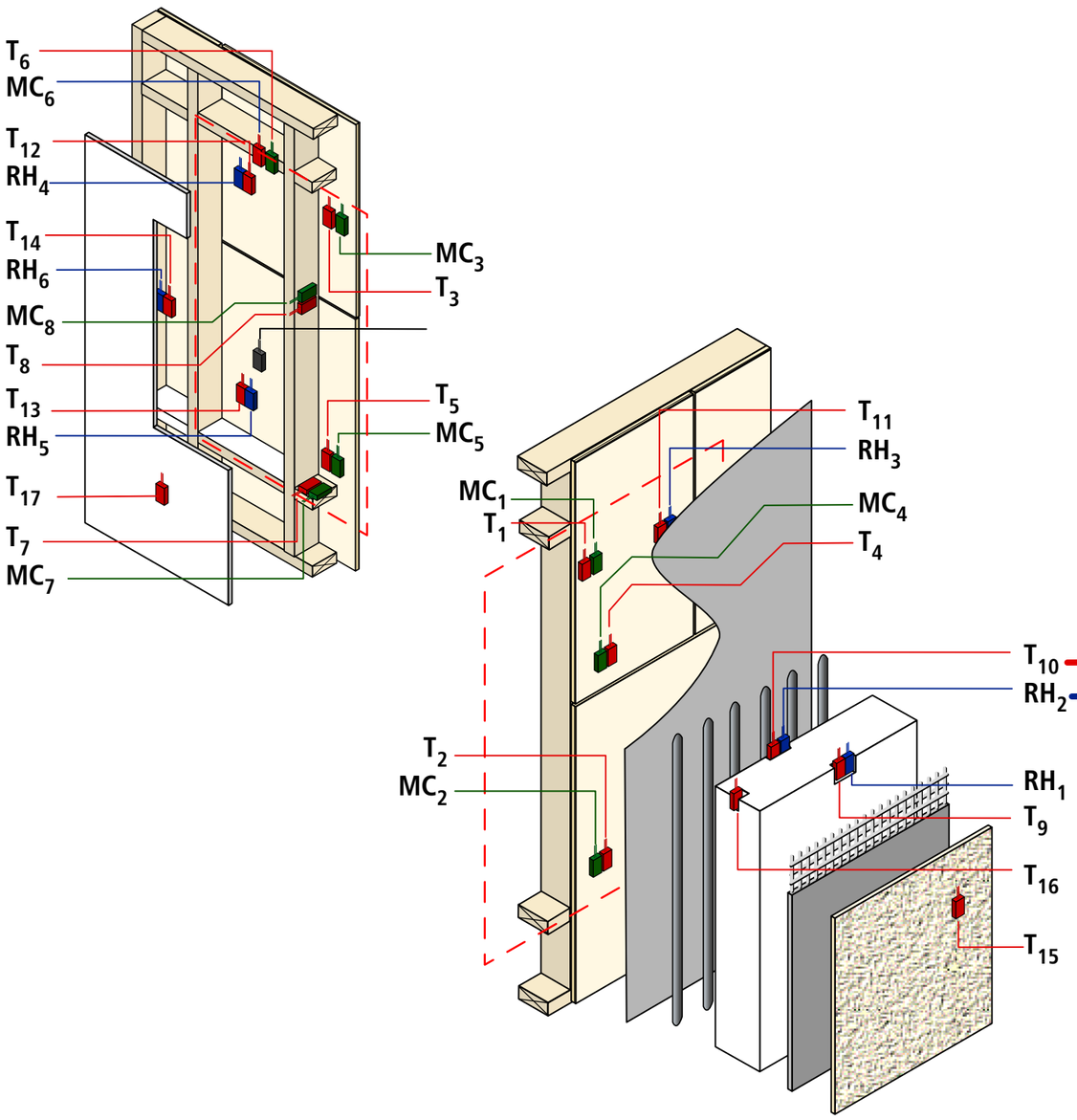
T_6
MC_6
T_{12}
RH_4
T_{14}
RH_6
MC_8
T_8
T_{13}
RH_5
T_{17}
T_7
MC_7
MC_3
T_3
T_5
MC_5
MC_1
T_1
T_{11}
RH_3
MC_4
T_4
T_{10}
RH_2
T_2
MC_2
RH_1
T_9
T_{16}
T_{15}

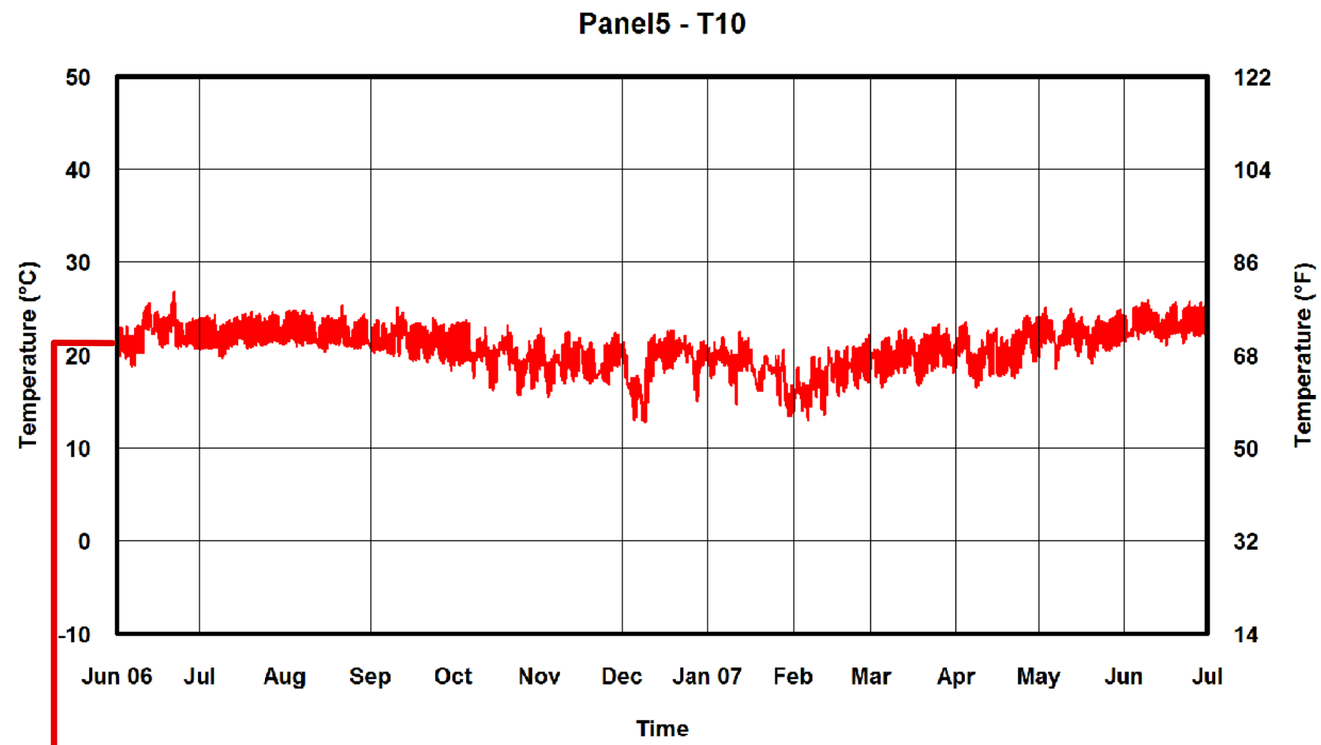
Panel5 - T10
Temperature (°C)
Temperature (°F)
50
40
30
20
10
0
-10
122
104
86
68
50
32
14
Jun 06
Jul
Aug
Sep
Oct
Nov
Dec
Jan 07
Feb
Mar
Apr
May
Jun
Jul
Time

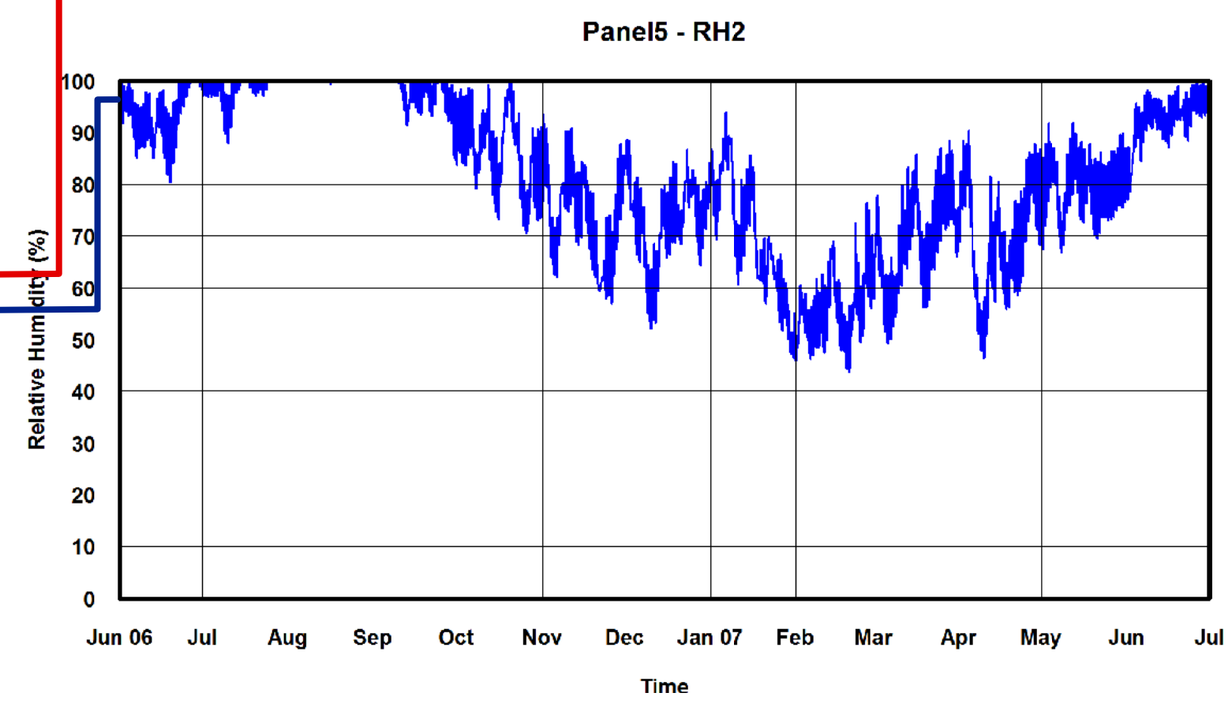
Panel5 - RH2
Relative Humidity (%)
100
90
80
70
60
50
40
30
20
10
0
Jun 06
Jul
Aug
Sep
Oct
Nov
Dec
Jan 07
Feb
Mar
Apr
May
Jun
Jul
Time

Panel 5

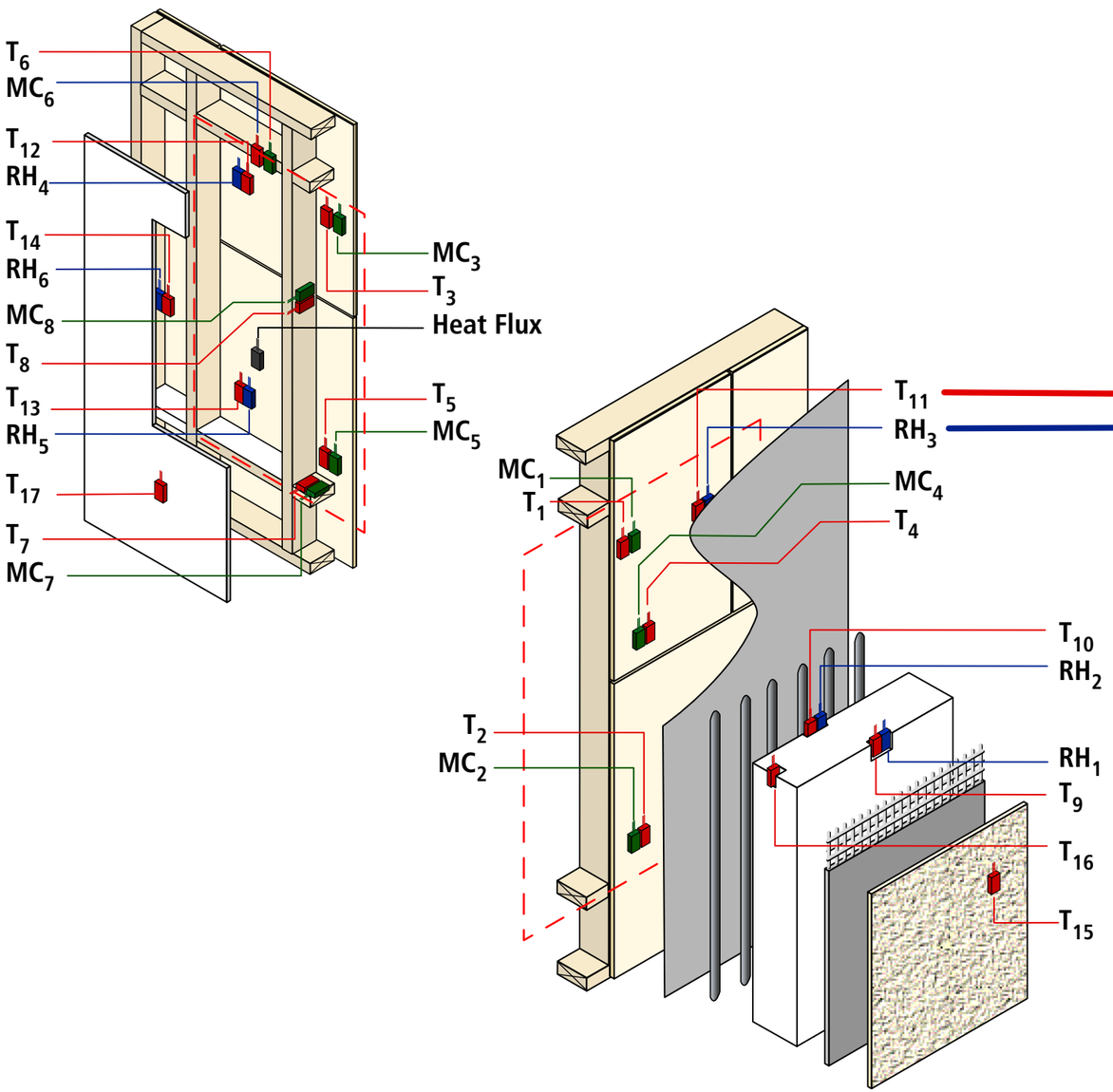
T_6
MC_6
T_{12}
RH_4
T_{14}
RH_6
MC_8
T_8
T_{13}
RH_5
T_{17}
T_7
MC_7
MC_3
T_3
Heat Flux
T_5
MC_5
MC_1
T_1
T_2
MC_2
T_{11}
RH_3
MC_4
T_4
T_{10}
RH_2
RH_1
T_9
T_{16}
T_{15}

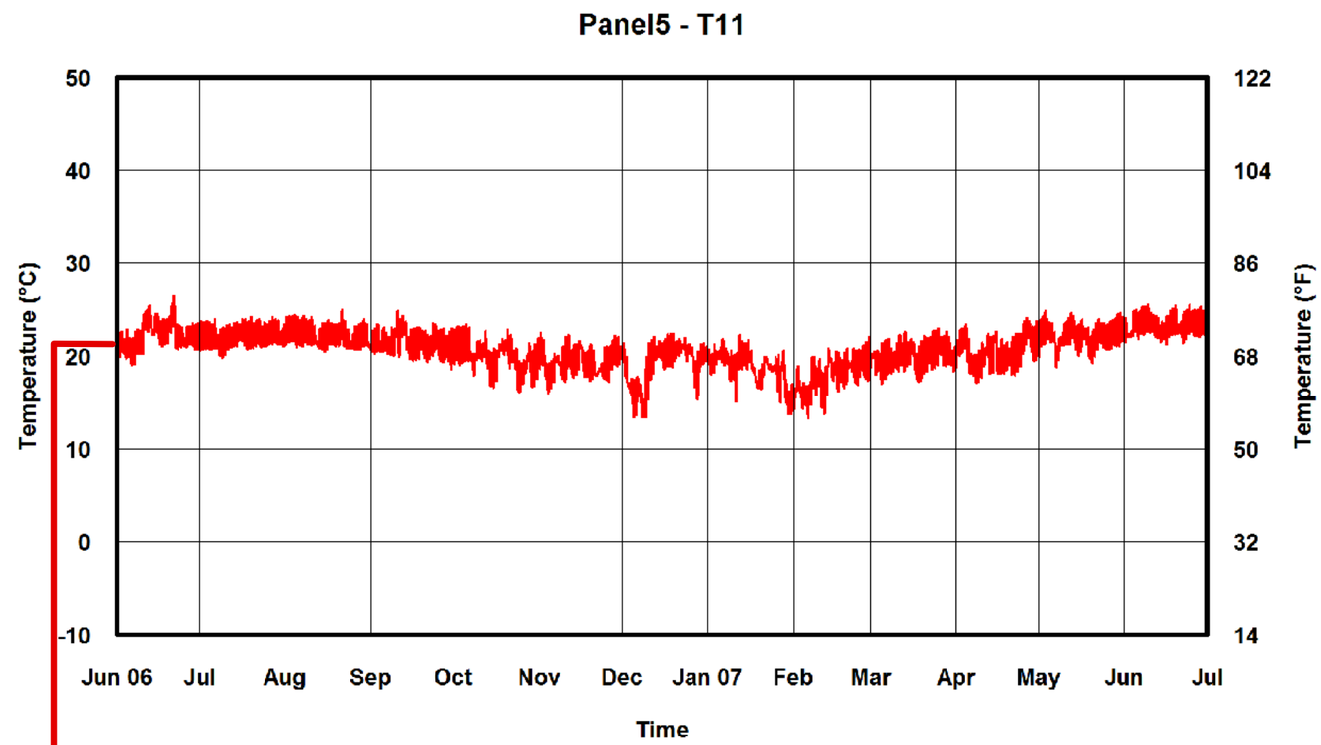
Panel5 - T11
Temperature (°C)
Temperature (°F)
50
40
30
20
10
0
-10
122
104
86
68
50
32
14
Jun 06
Jul
Aug
Sep
Oct
Nov
Dec
Jan 07
Feb
Mar
Apr
May
Jun
Jul
Time

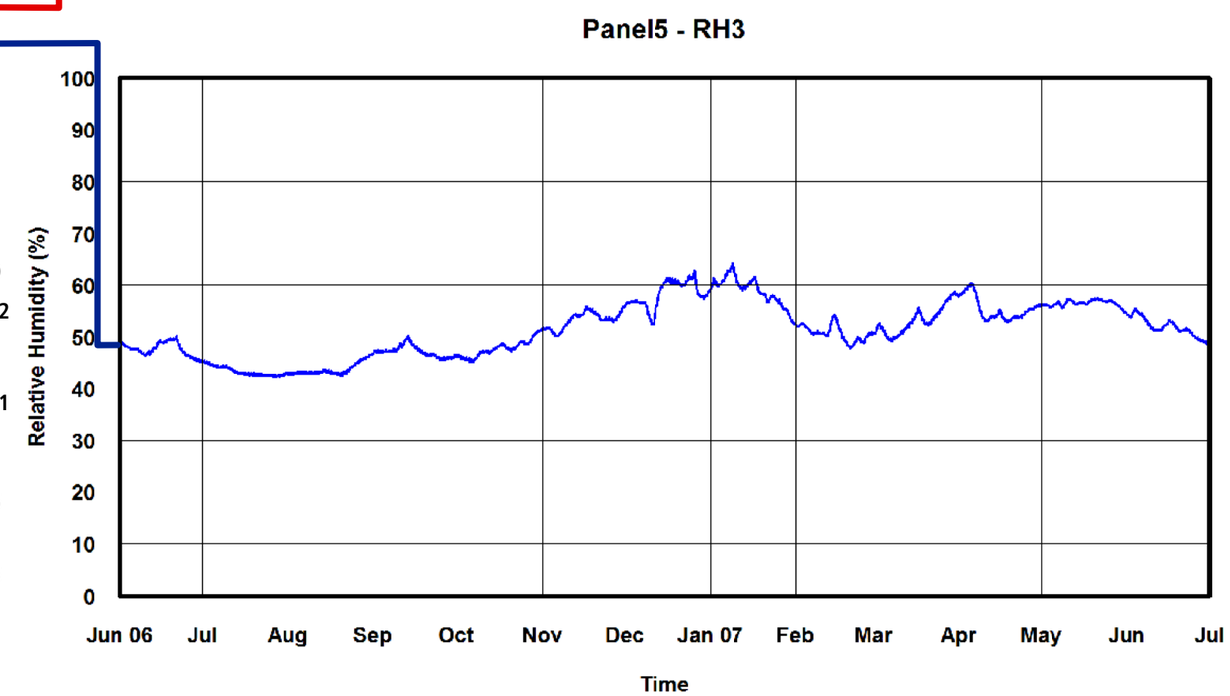
Panel5 - RH3
Relative Humidity (%)
100
90
80
70
60
50
40
30
20
10
0
Jun 06
Jul
Aug
Sep
Oct
Nov
Dec
Jan 07
Feb
Mar
Apr
May
Jun
Jul
Time

Panel 5

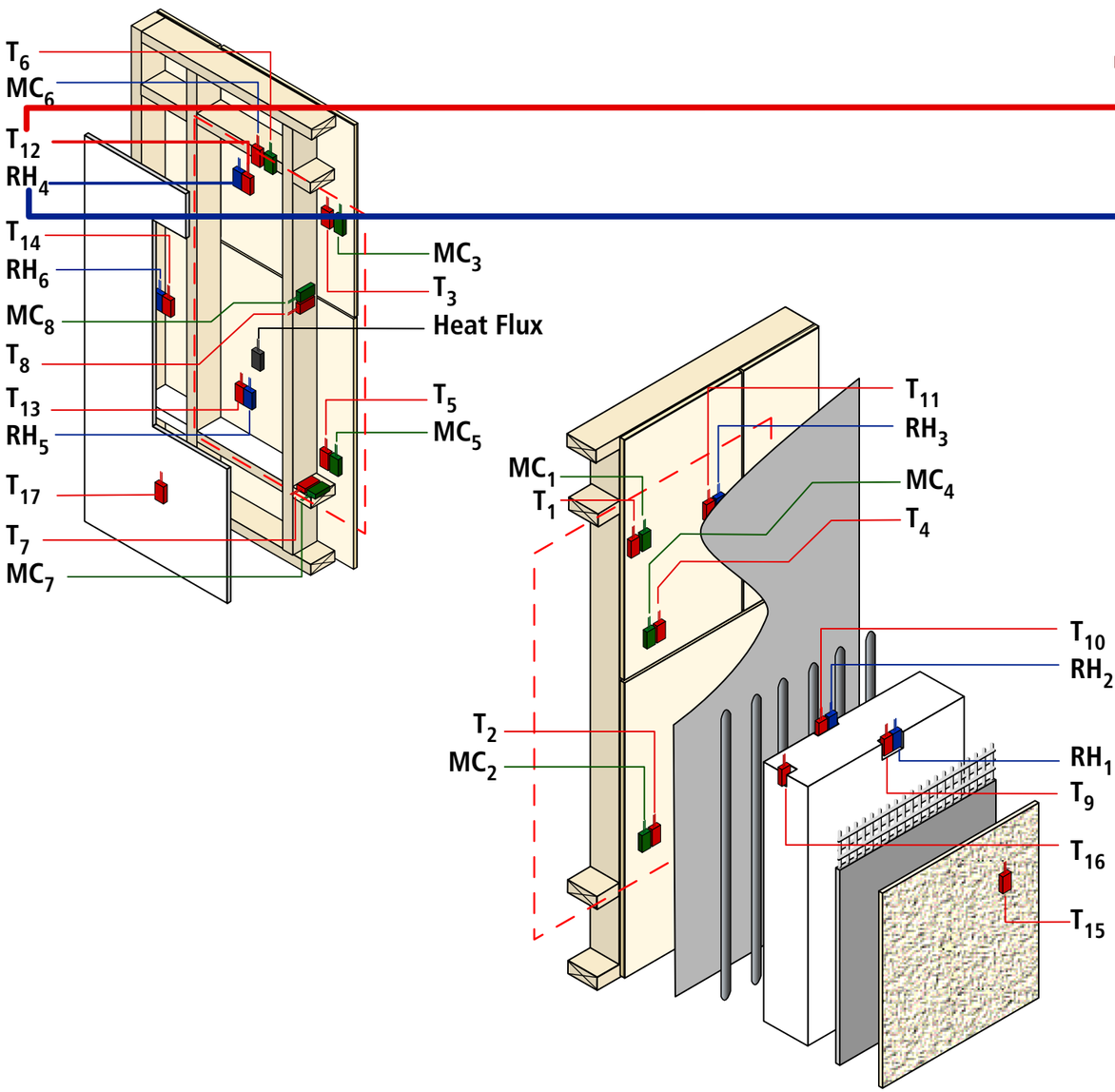
T_6
MC_6
T_{12}
RH_4
T_{14}
RH_6
MC_8
T_8
T_{13}
RH_5
T_{17}
T_7
MC_7
MC_3
T_3
Heat Flux
T_5
MC_5
T_{11}
RH_3
MC_1
T_1
MC_4
T_4
T_{10}
RH_2
T_2
MC_2
RH_1
T_9
T_{16}
T_{15}

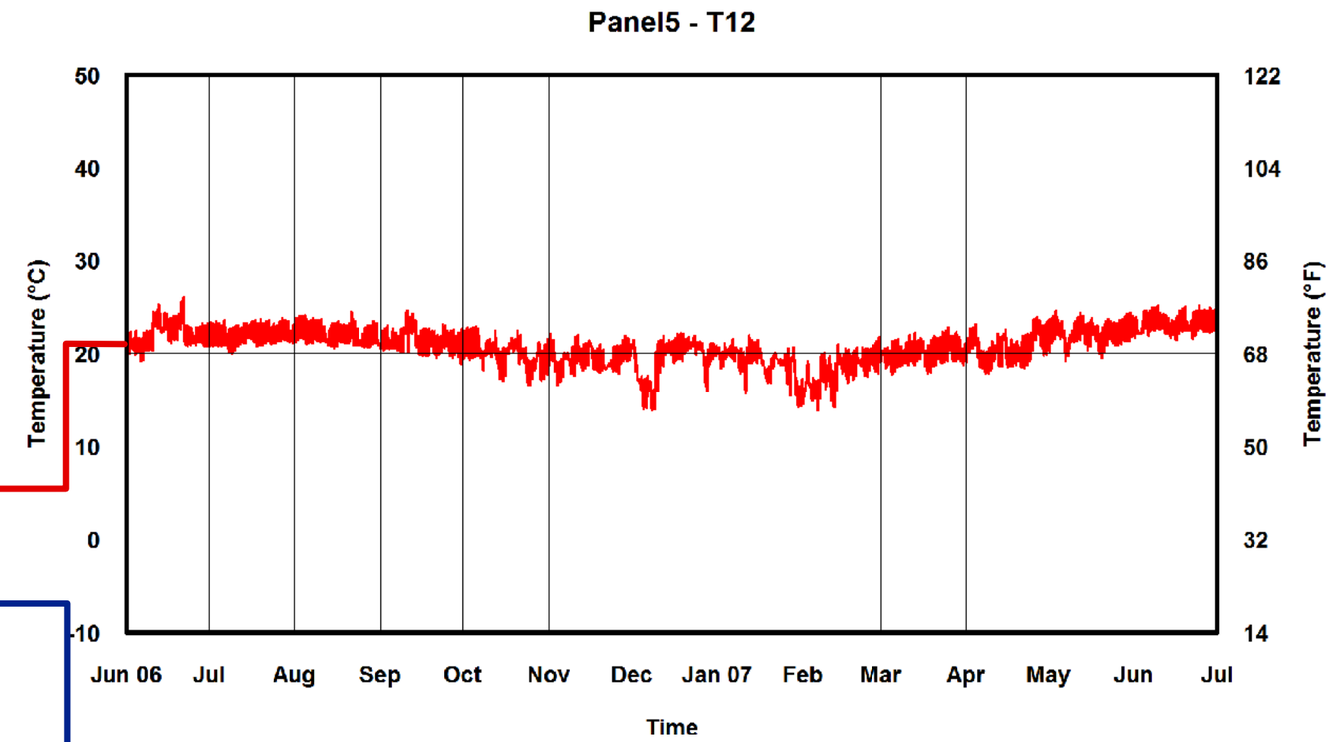
Panel5 - T12
Temperature (°C)
50
40
30
20
10
0
-10
Temperature (°F)
122
104
86
68
50
32
14
Jun 06
Jul
Aug
Sep
Oct
Nov
Dec
Jan 07
Feb
Mar
Apr
May
Jun
Jul
Time

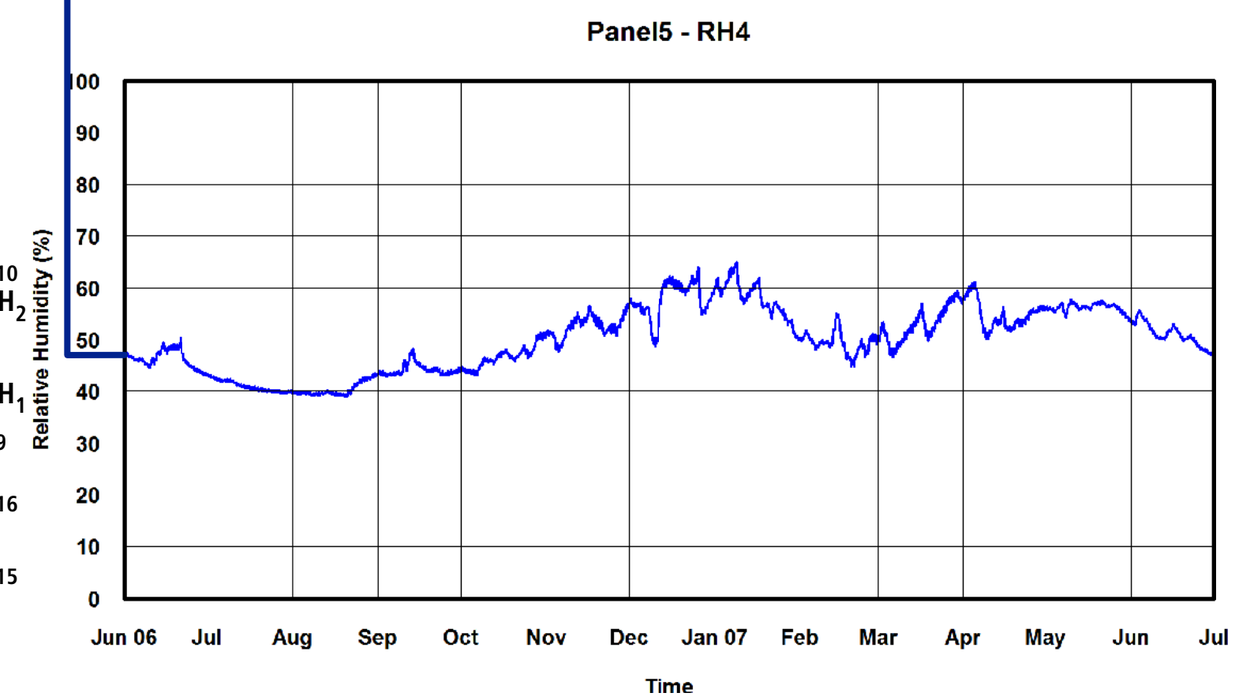
Panel5 - RH4
Relative Humidity (%)
100
90
80
70
60
50
40
30
20
10
0
Jun 06
Jul
Aug
Sep
Oct
Nov
Dec
Jan 07
Feb
Mar
Apr
May
Jun
Jul
Time

Panel 5

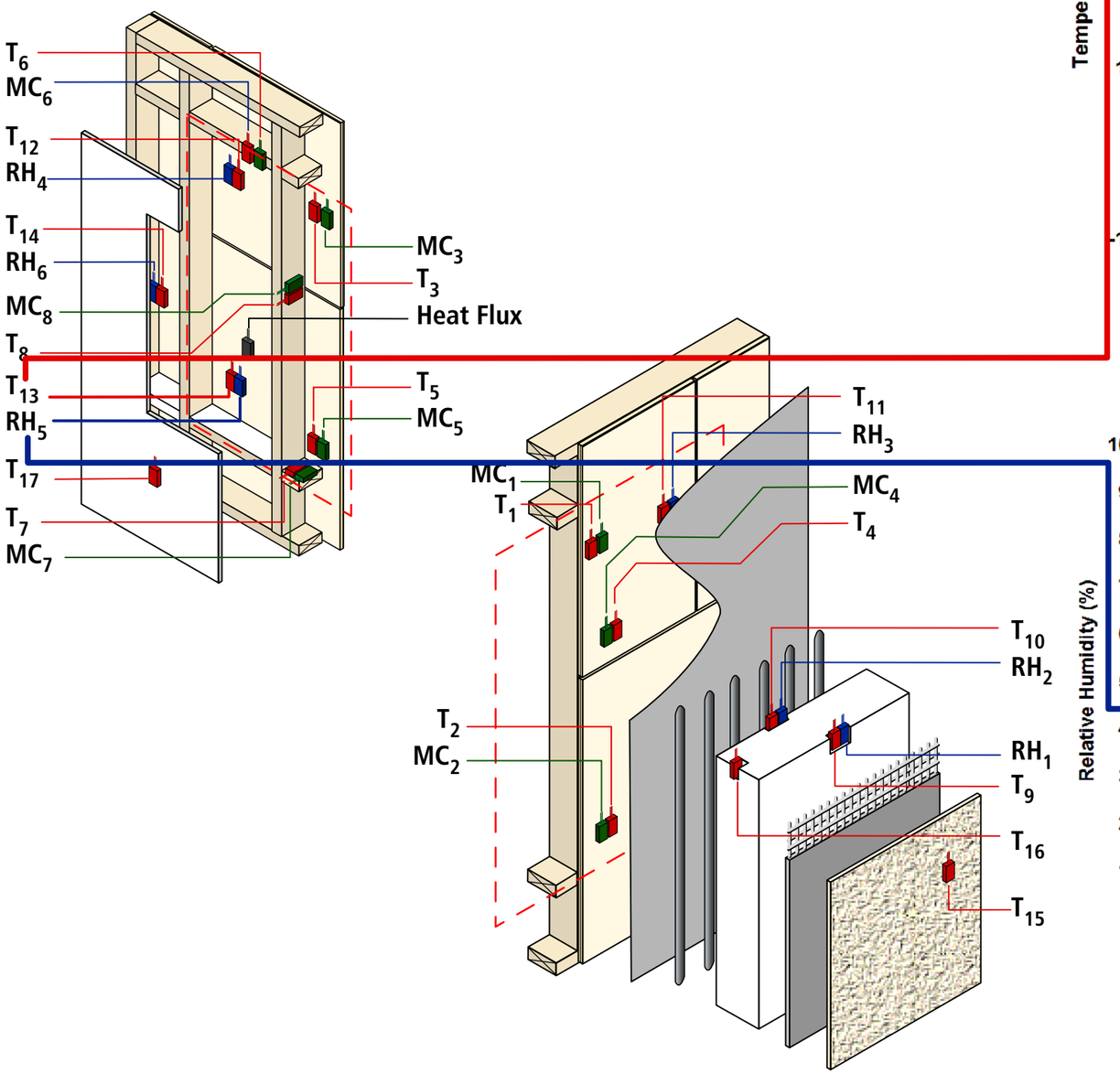
T_6
MC_6
T_{12}
RH_4
T_{14}
RH_6
MC_8
T_8
T_{13}
RH_5
T_{17}
T_7
MC_7
MC_3
T_3
Heat Flux
T_5
MC_5
MC_1
T_1
T_2
MC_2
T_{11}
RH_3
MC_4
T_4
T_{10}
RH_2
RH_1
T_9
T_{16}
T_{15}

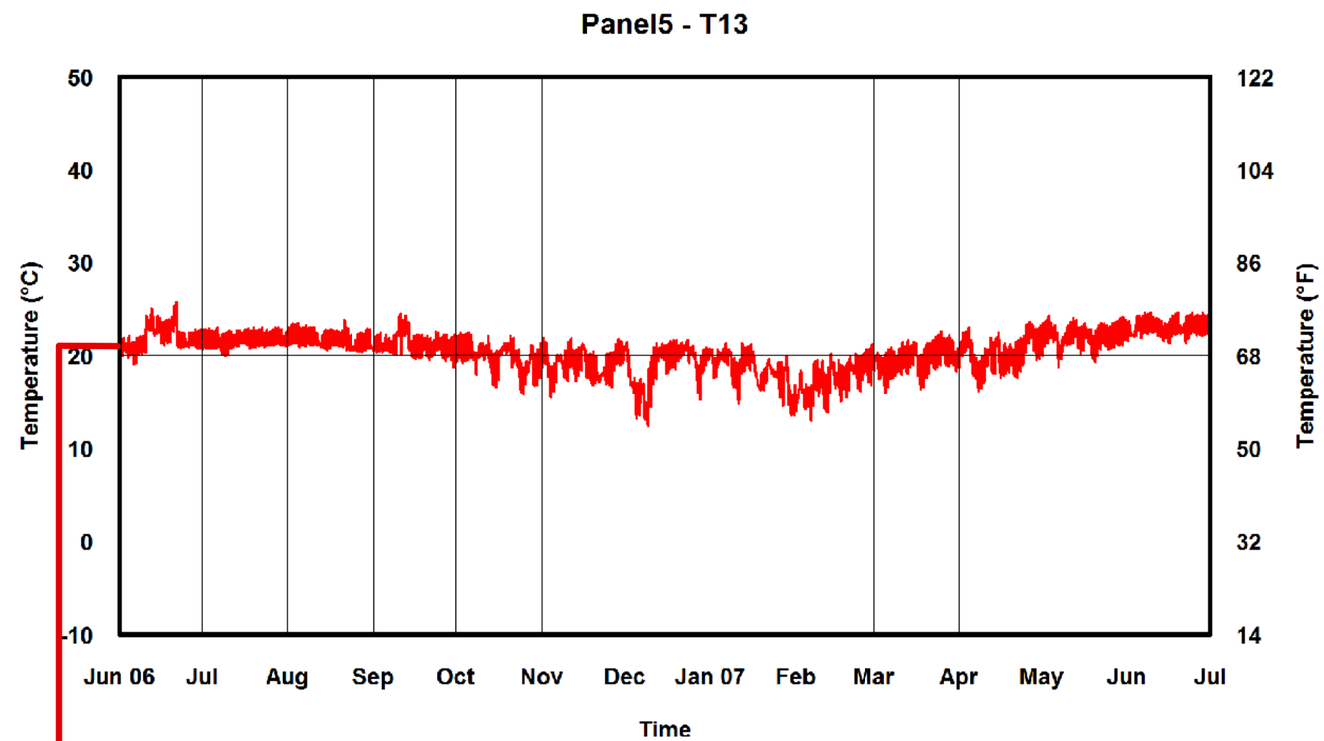
Panel5 - T13
Temperature (°C)
50
40
30
20
10
0
-10
Temperature (°F)
122
104
86
68
50
32
14
Jun 06
Jul
Aug
Sep
Oct
Nov
Dec
Jan 07
Feb
Mar
Apr
May
Jun
Jul
Time

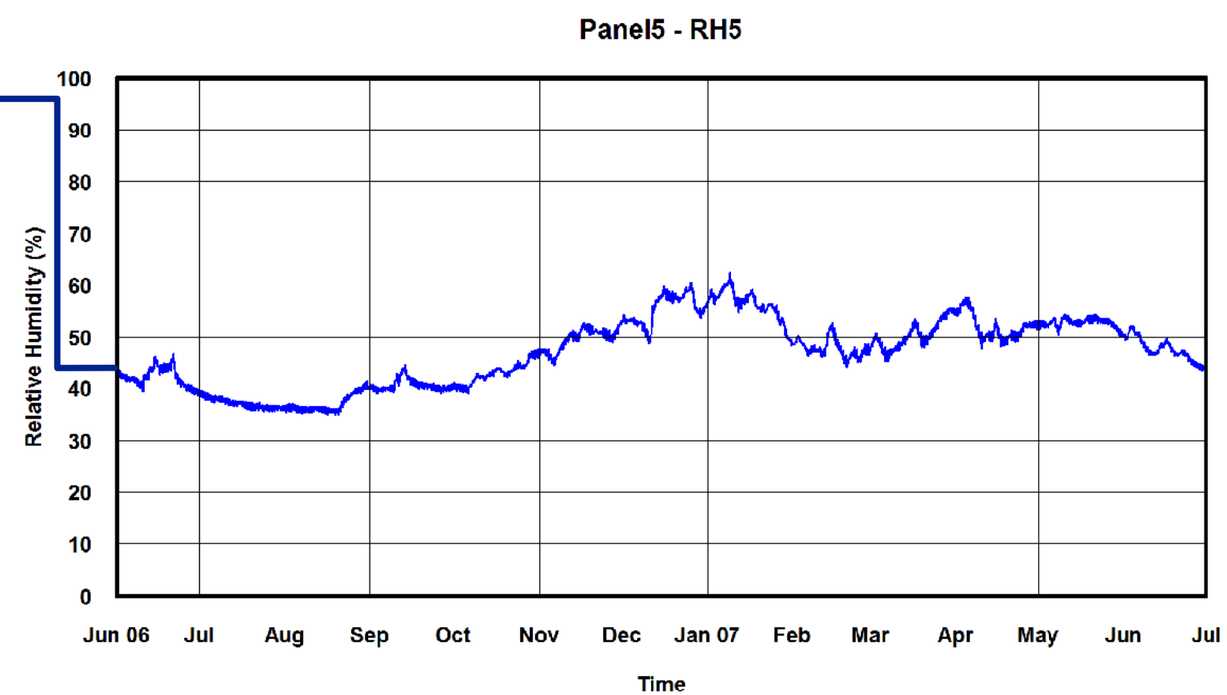
Panel5 - RH5
Relative Humidity (%)
100
90
80
70
60
50
40
30
20
10
0
Jun 06
Jul
Aug
Sep
Oct
Nov
Dec
Jan 07
Feb
Mar
Apr
May
Jun
Jul
Time

Panel 5

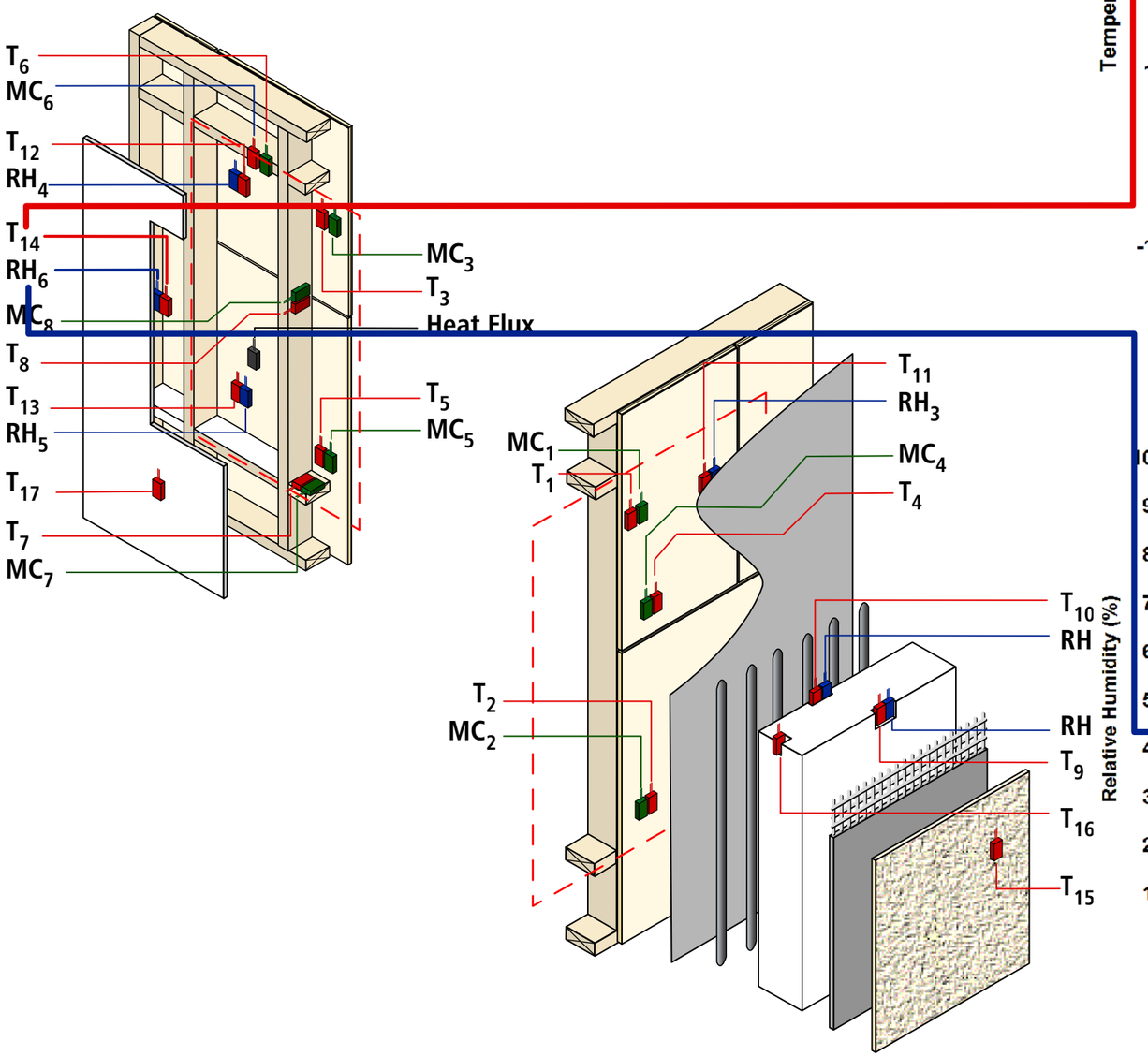
T_6
MC_6
T_{12}
RH_4
T_{14}
RH_6
MC_8
T_8
T_{13}
RH_5
T_{17}
T_7
MC_7
MC_3
T_3
Heat Flux
T_5
MC_5
MC_1
T_1
T_{11}
RH_3
MC_4
T_4
T_{10}
RH
RH
T_9
T_{16}
T_{15}
T_2
MC_2

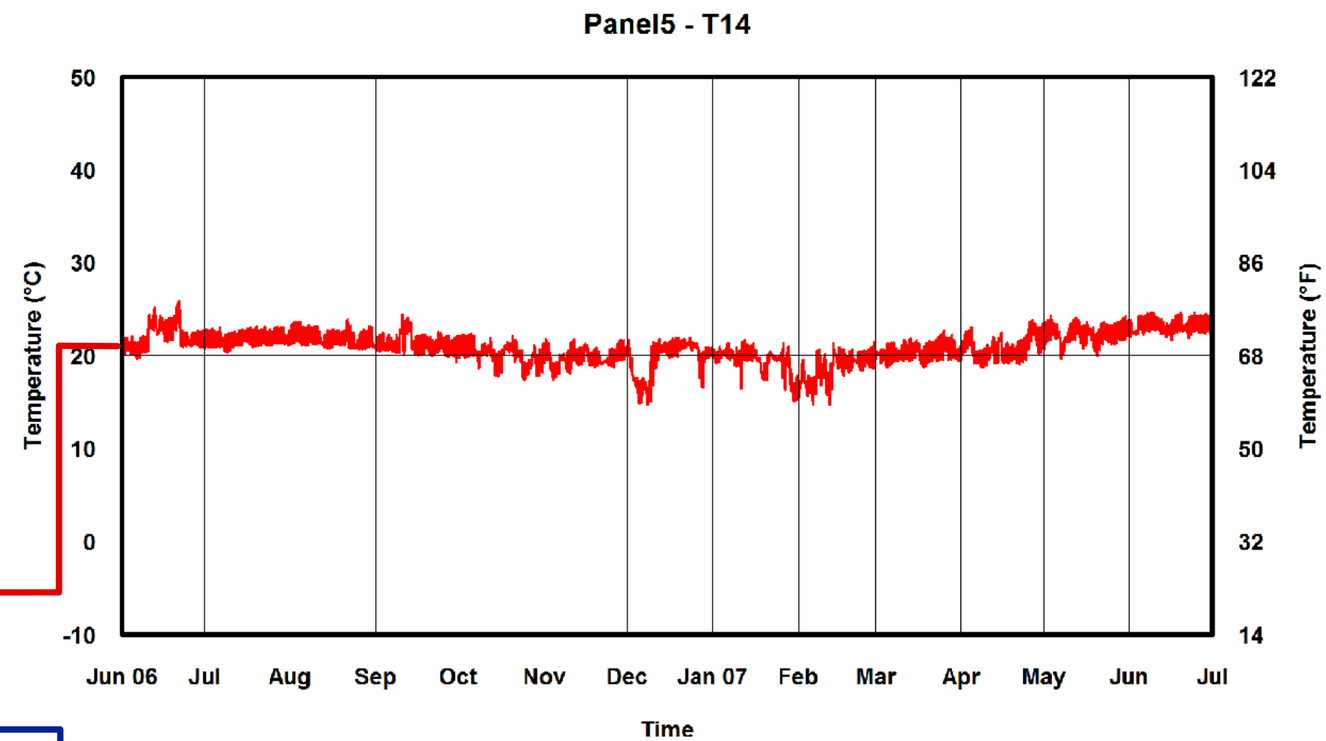
Panel5 - T14
Temperature (°C)
50
40
30
20
10
0
-10
Temperature (°F)
122
104
86
68
50
32
14
Jun 06
Jul
Aug
Sep
Oct
Nov
Dec
Jan 07
Feb
Mar
Apr
May
Jun
Jul
Time

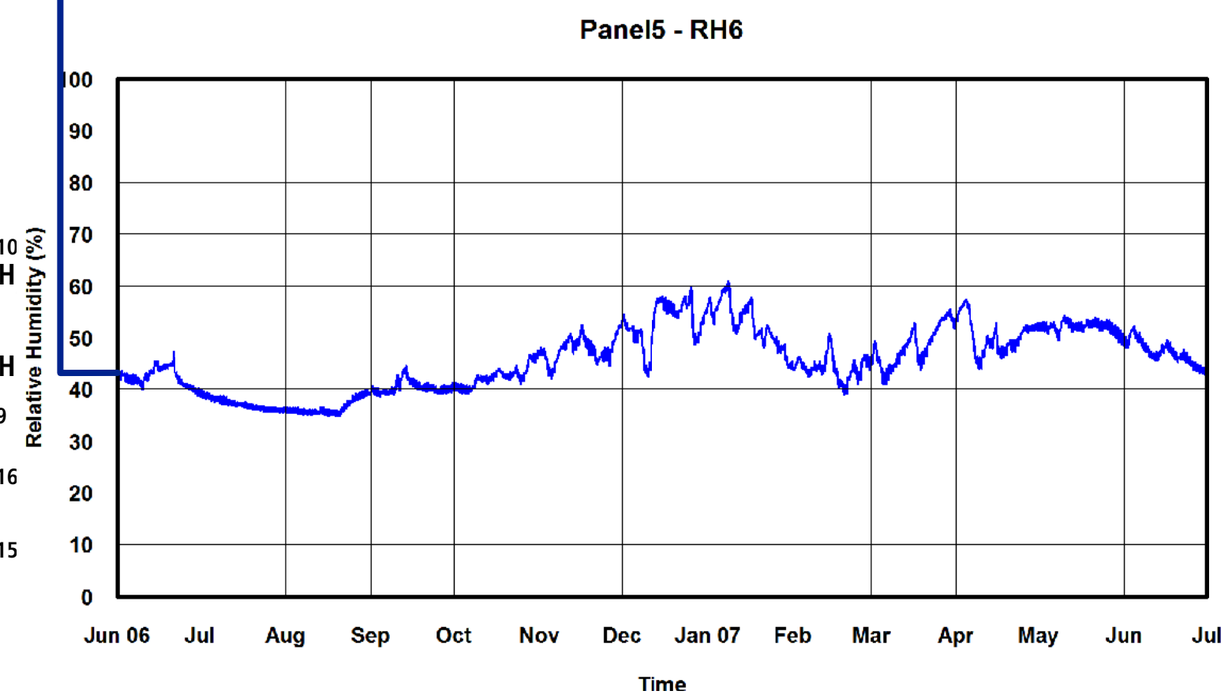
Panel5 - RH6
Relative Humidity (%)
100
90
80
70
60
50
40
30
20
10
0
Jun 06
Jul
Aug
Sep
Oct
Nov
Dec
Jan 07
Feb
Mar
Apr
May
Jun
Jul
Time

Panel 5

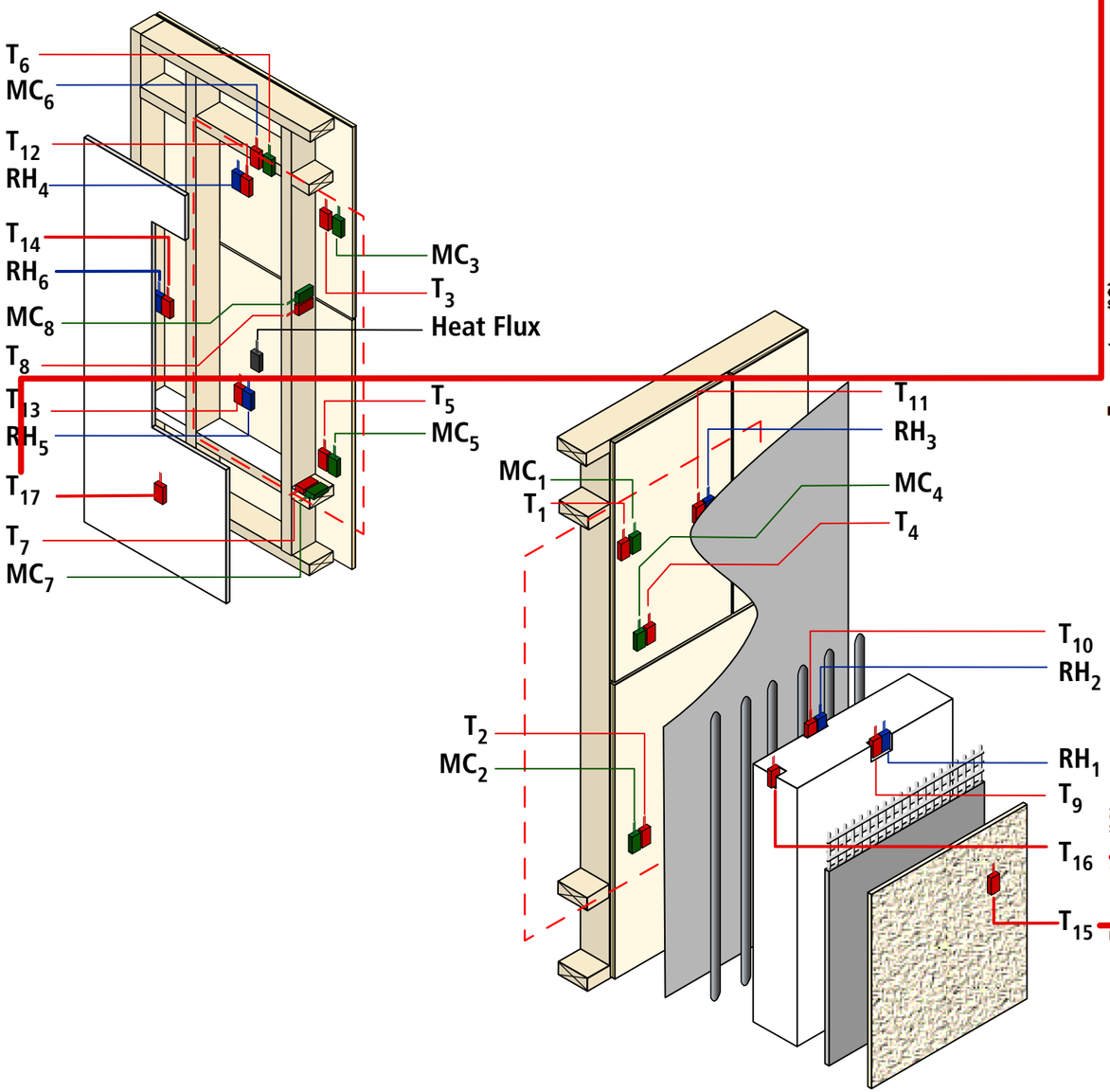
T_6
MC_6
T_{12}
RH_4
T_{14}
RH_6
MC_8
T_8
T_{13}
RH_5
T_{17}
T_7
MC_7
MC_3
T_3
Heat Flux
T_5
MC_5
MC_1
T_1
T_{11}
RH_3
MC_4
T_4
T_{10}
RH_2
T_2
MC_2
RH_1
T_9
T_{16}
T_{15}

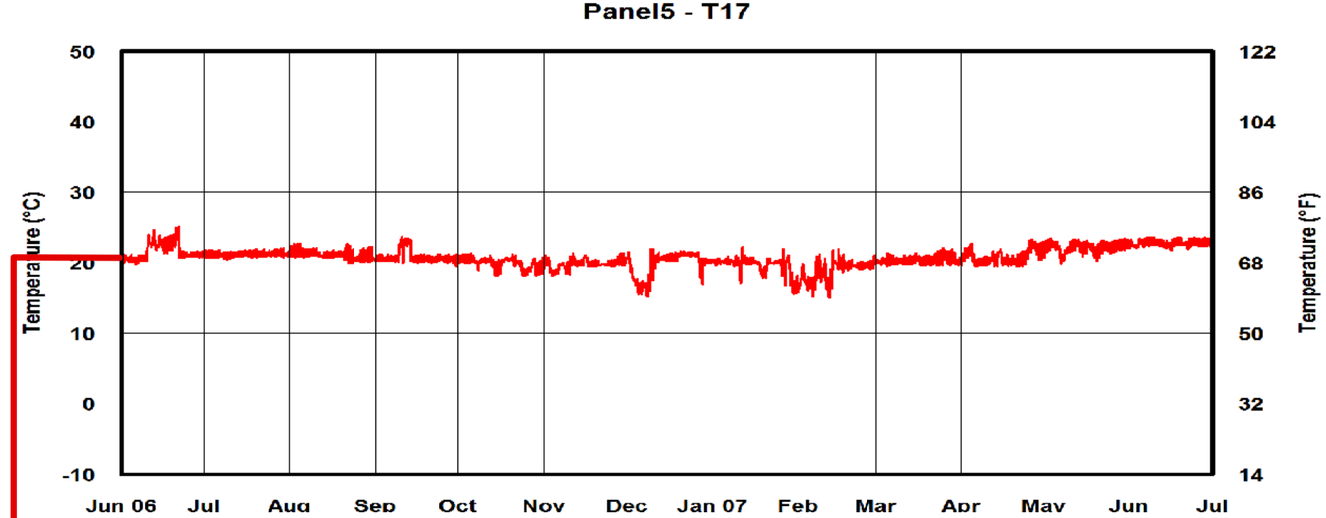
Panel5 - T17
Temperature (°C)
Temperature (°F)
50
40
30
20
10
0
-10
122
104
86
68
50
32
14
Jun 06
Jul
Aug
Sep
Oct
Nov
Dec
Jan 07
Feb
Mar
Apr
May
Jun
Jul

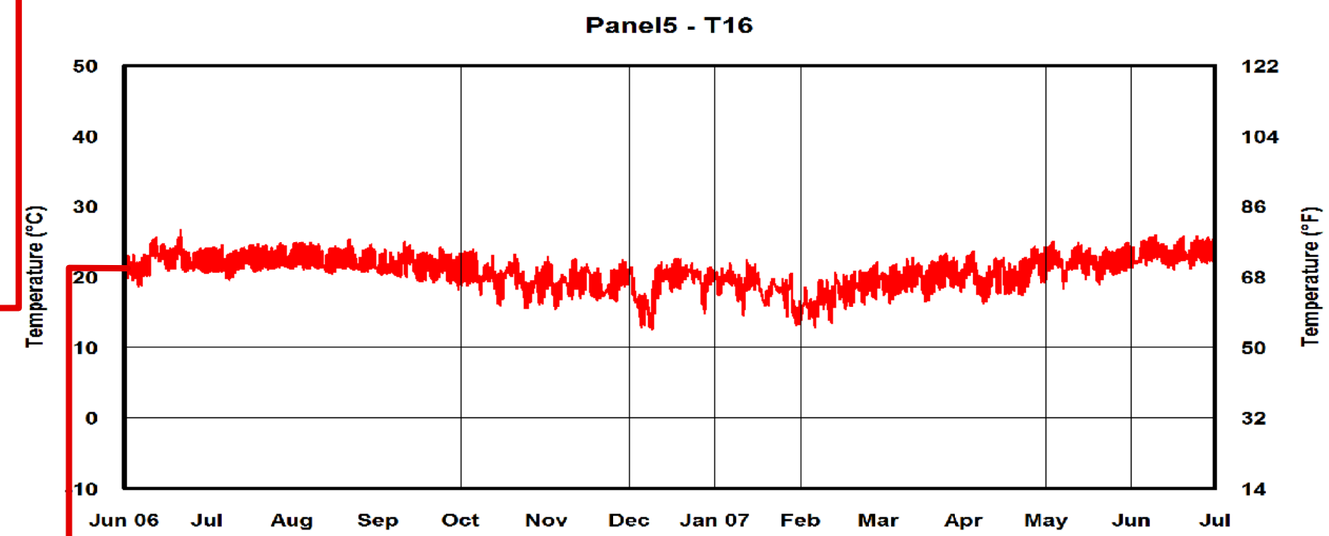
Panel5 - T16
Temperature (°C)
Temperature (°F)
50
40
30
20
10
0
-10
122
104
86
68
50
32
14
Jun 06
Jul
Aug
Sep
Oct
Nov
Dec
Jan 07
Feb
Mar
Apr
May
Jun
Jul

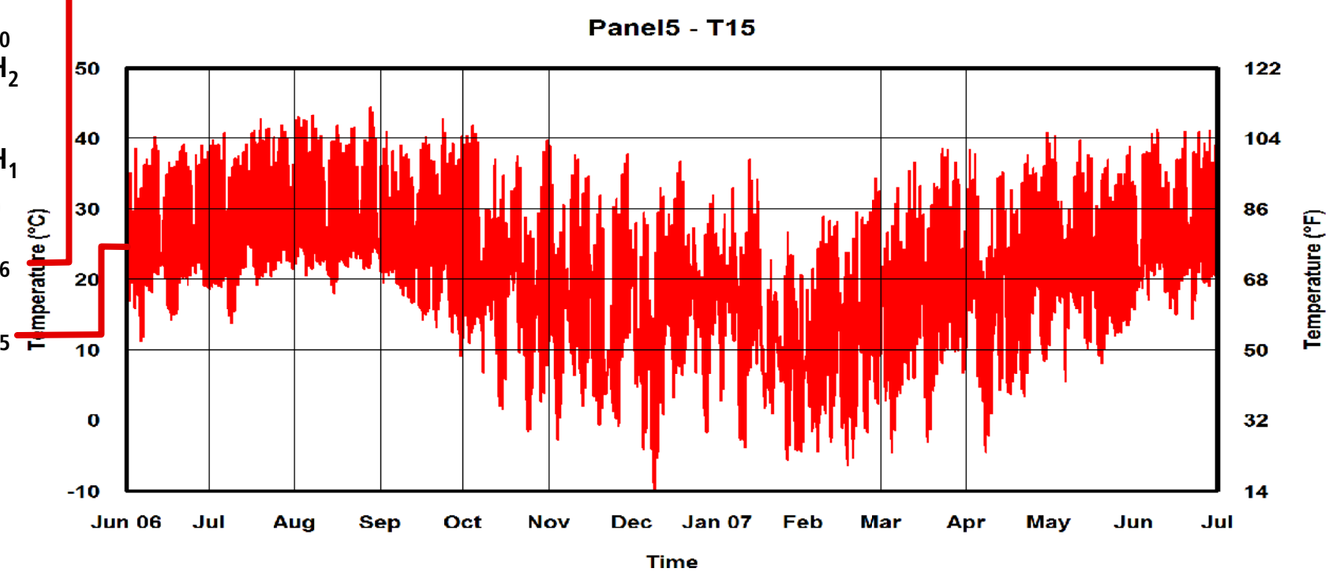
Panel5 - T15
Temperature (°C)
Temperature (°F)
50
40
30
20
10
0
-10
122
104
86
68
50
32
14
Jun 06
Jul
Aug
Sep
Oct
Nov
Dec
Jan 07
Feb
Mar
Apr
May
Jun
Jul
Time

Panel 5

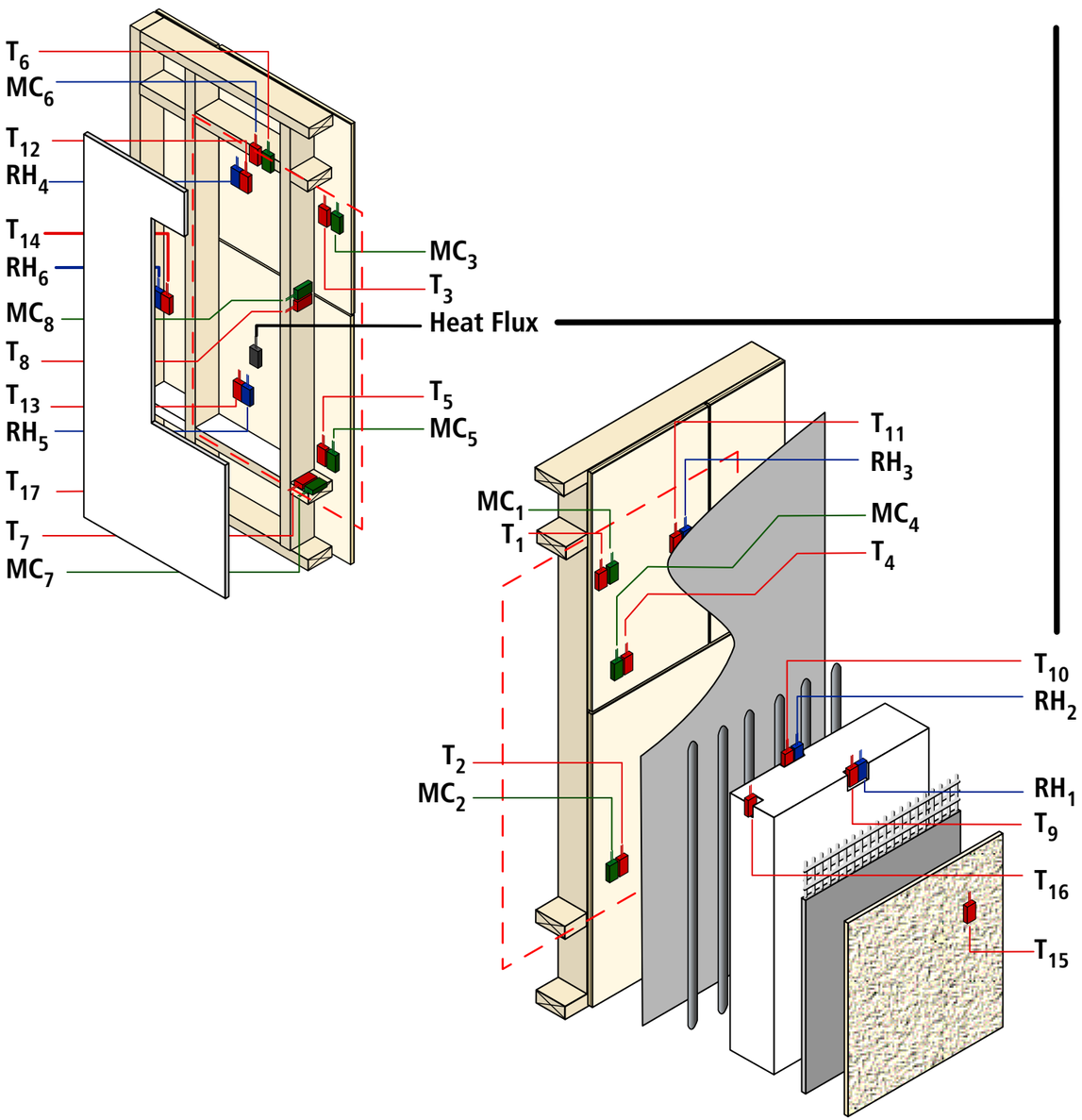
T_6
MC_6
T_{12}
RH_4
T_{14}
RH_6
MC_8
T_8
T_{13}
RH_5
T_{17}
T_7
MC_7
MC_3
T_3
Heat Flux
T_5
MC_5
T_{11}
RH_3
MC_1
T_1
MC_4
T_4
T_{10}
RH_2
T_2
MC_2
RH_1
T_9
T_{16}
T_{15}

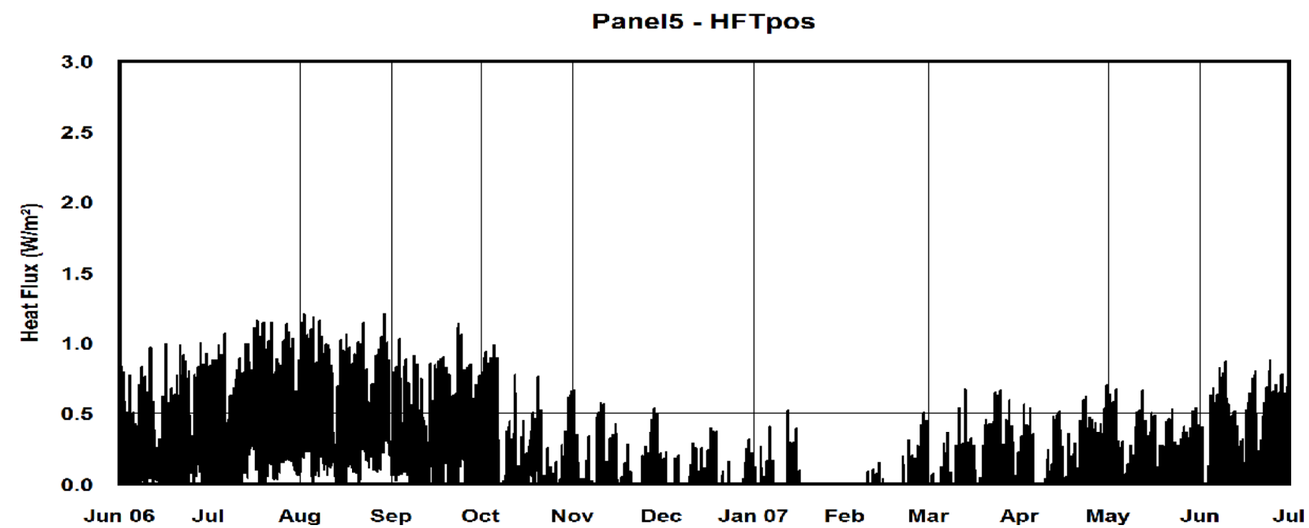
Panel5 - HFTpos
Heat Flux (W/m²)
3.0
2.5
2.0
1.5
1.0
0.5
0.0
Jun 06
Jul
Aug
Sep
Oct
Nov
Dec
Jan 07
Feb
Mar
Apr
May
Jun
Jul

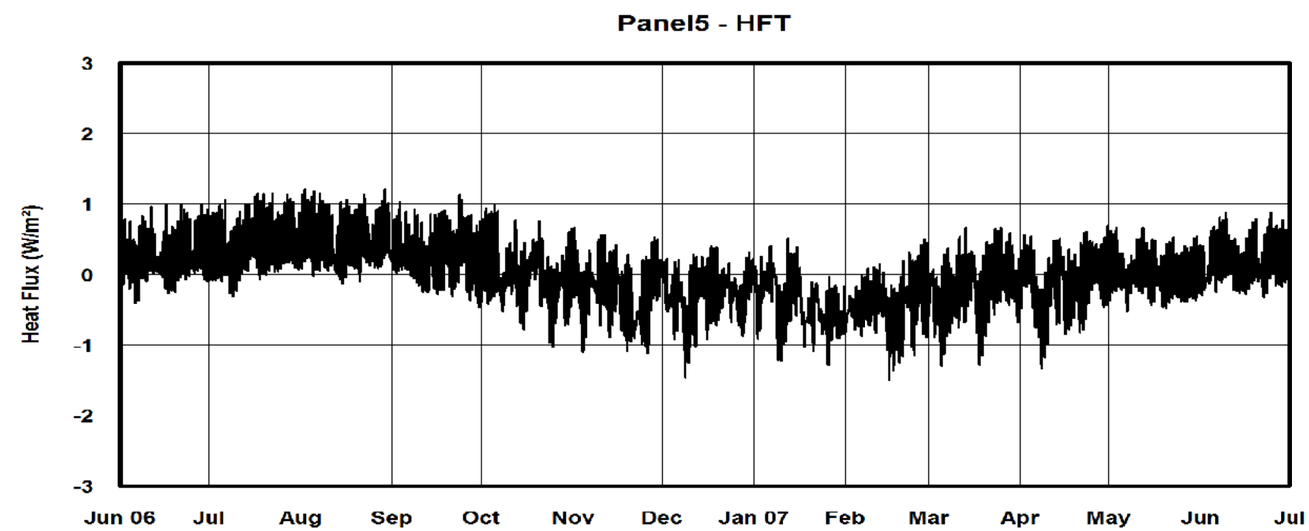
Panel5 - HFT
Heat Flux (W/m²)
3
2
1
0
-1
-2
-3
Jun 06
Jul
Aug
Sep
Oct
Nov
Dec
Jan 07
Feb
Mar
Apr
May
Jun
Jul

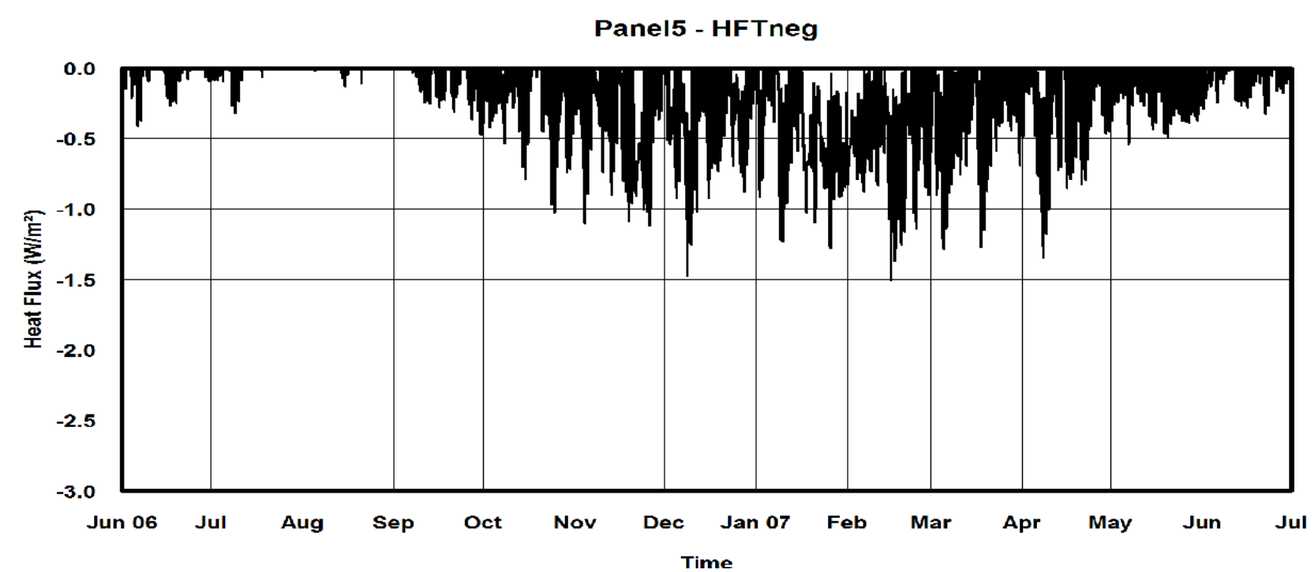
Panel5 - HFTneg
Heat Flux (W/m²)
0.0
-0.5
-1.0
-1.5
-2.0
-2.5
-3.0
Jun 06
Jul
Aug
Sep
Oct
Nov
Dec
Jan 07
Feb
Mar
Apr
May
Jun
Jul
Time

Panel 5

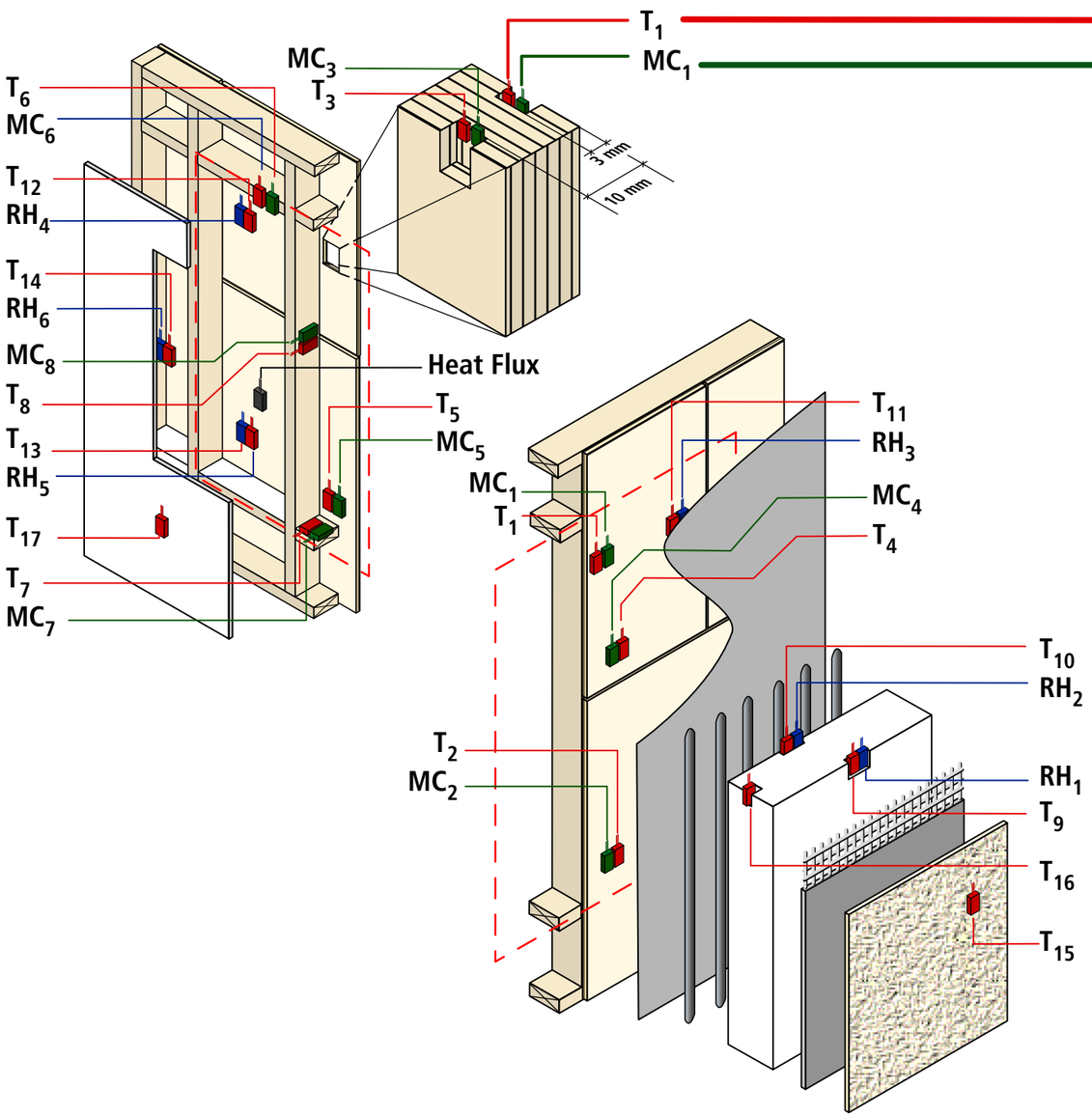
T1
MC1
MC3
T3
T6
MC6
T12
RH4
T14
RH6
MC8
T8
T13
RH5
T17
T7
MC7
3 mm
10 mm
Heat Flux
T5
MC5
MC1
T1
T11
RH3
MC4
T4
T10
RH2
T2
MC2
RH1
T9
T16
T15

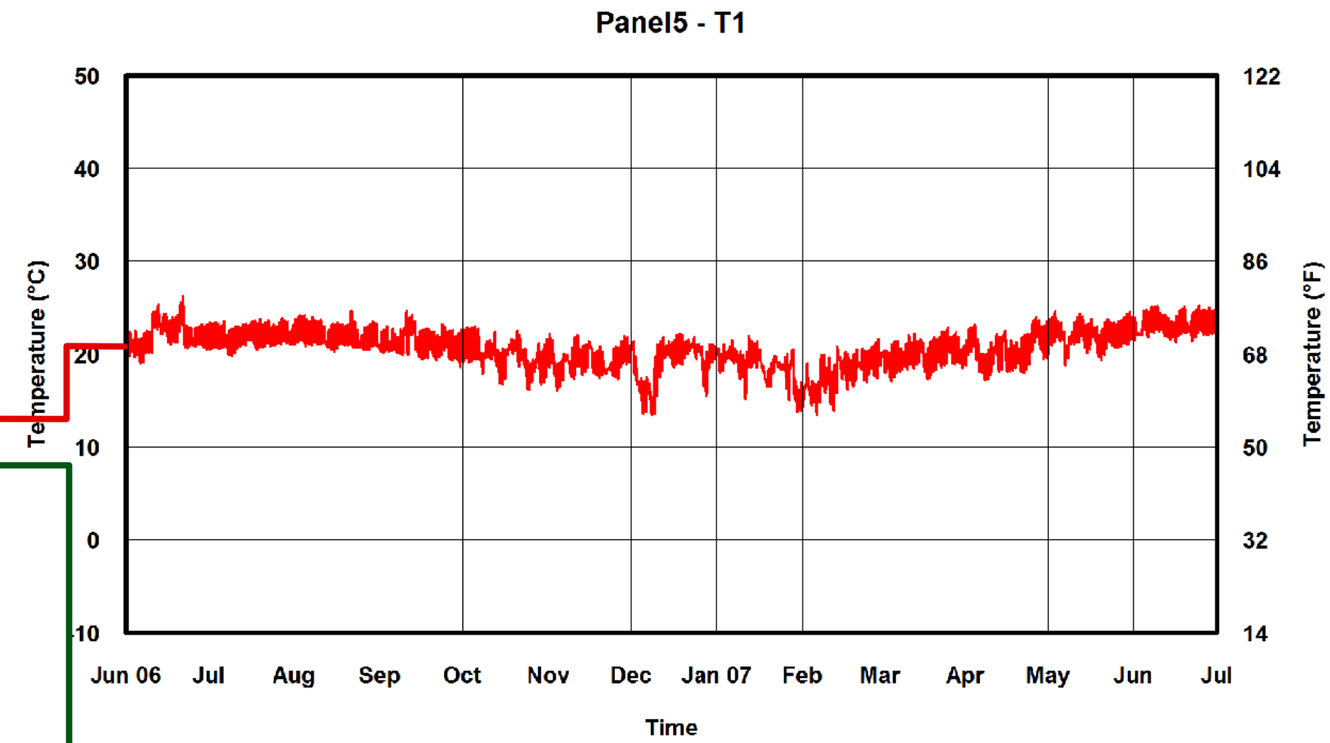
Panel5 - T1
Temperature (°C)
Temperature (°F)
50
40
30
20
10
0
-10
122
104
86
68
50
32
14
Jun 06
Jul
Aug
Sep
Oct
Nov
Dec
Jan 07
Feb
Mar
Apr
May
Jun
Jul
Time

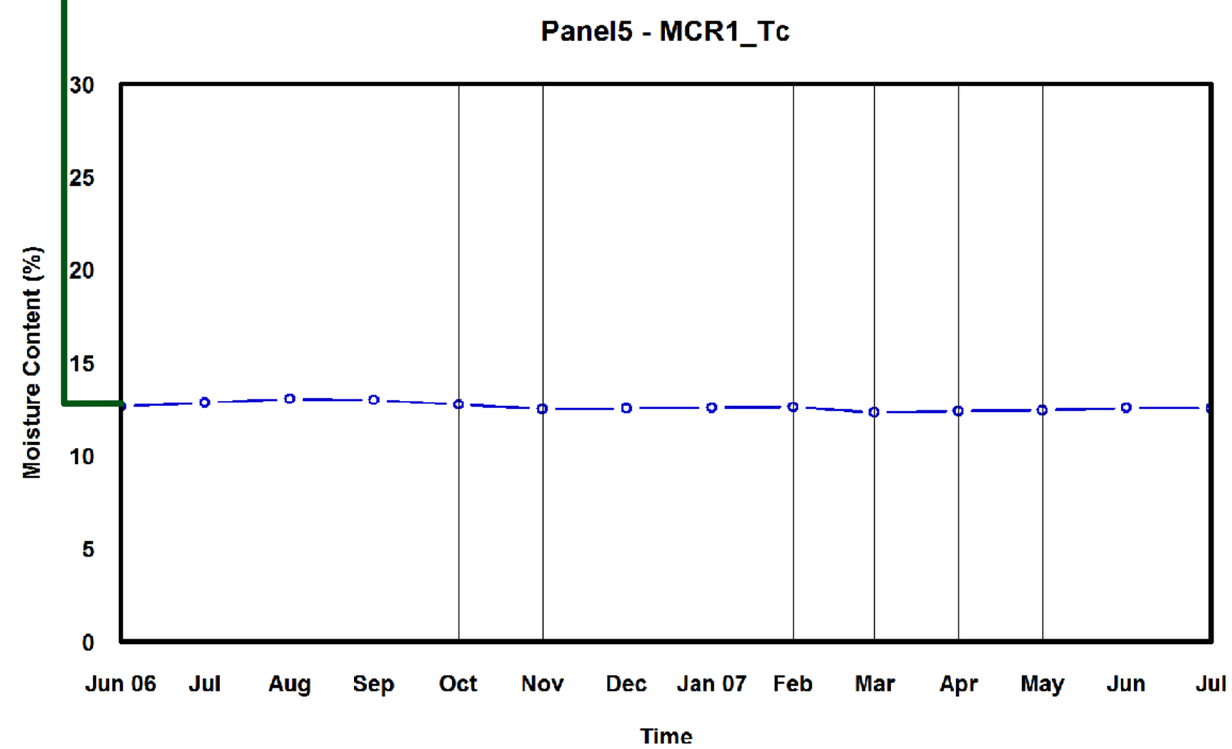
Panel5 - MCR1_Tc
Moisture Content (%)
30
25
20
15
10
5
0
Jun 06
Jul
Aug
Sep
Oct
Nov
Dec
Jan 07
Feb
Mar
Apr
May
Jun
Jul
Time

Panel 5

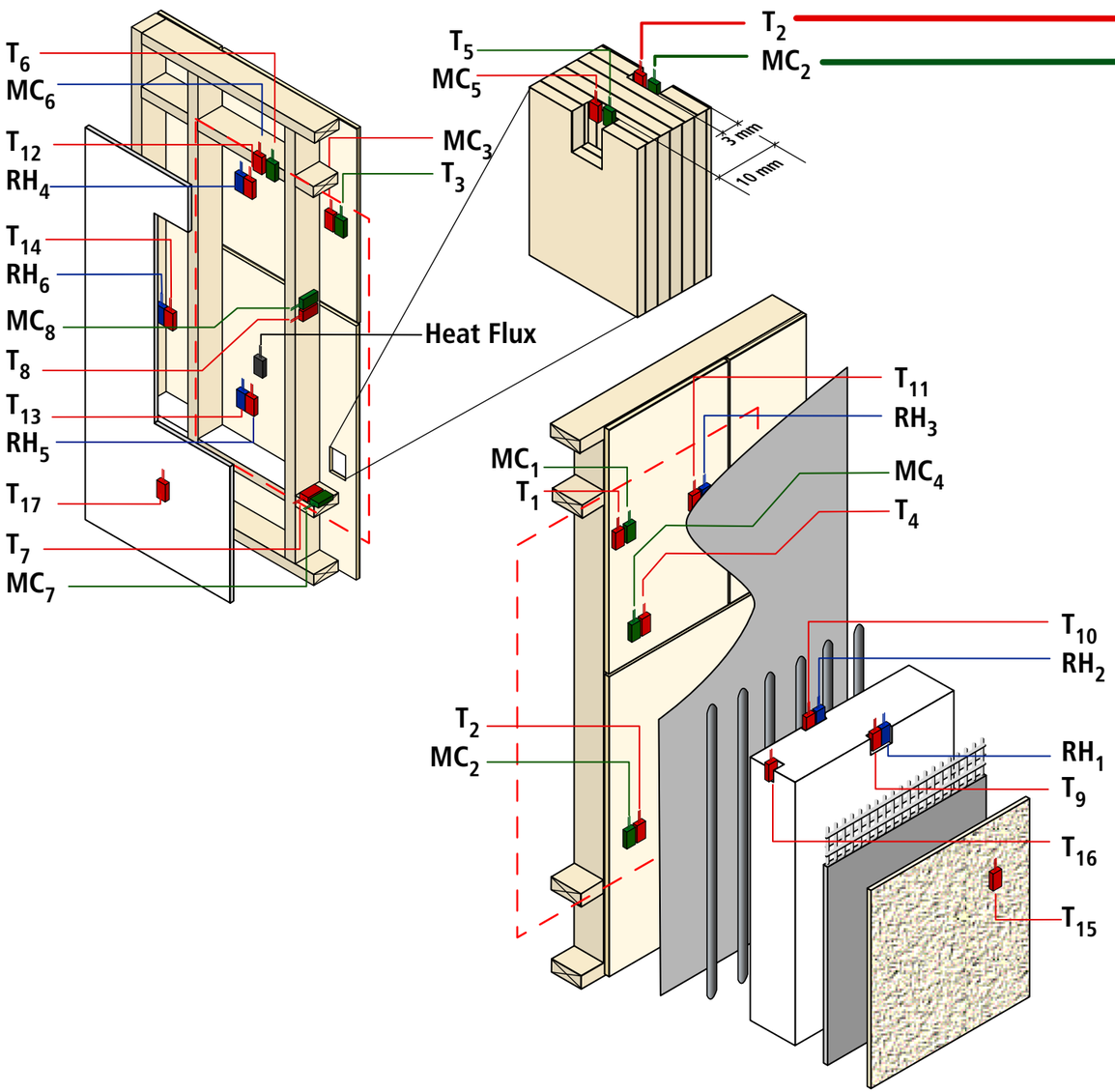
T6
MC6
T12
RH4
T14
RH6
MC8
T8
T13
RH5
T17
T7
MC7
T5
MC5
T2
MC2
MC3
T3
3 mm
10 mm
Heat Flux
T11
RH3
MC1
T1
MC4
T4
T10
RH2
T2
MC2
RH1
T9
T16
T15

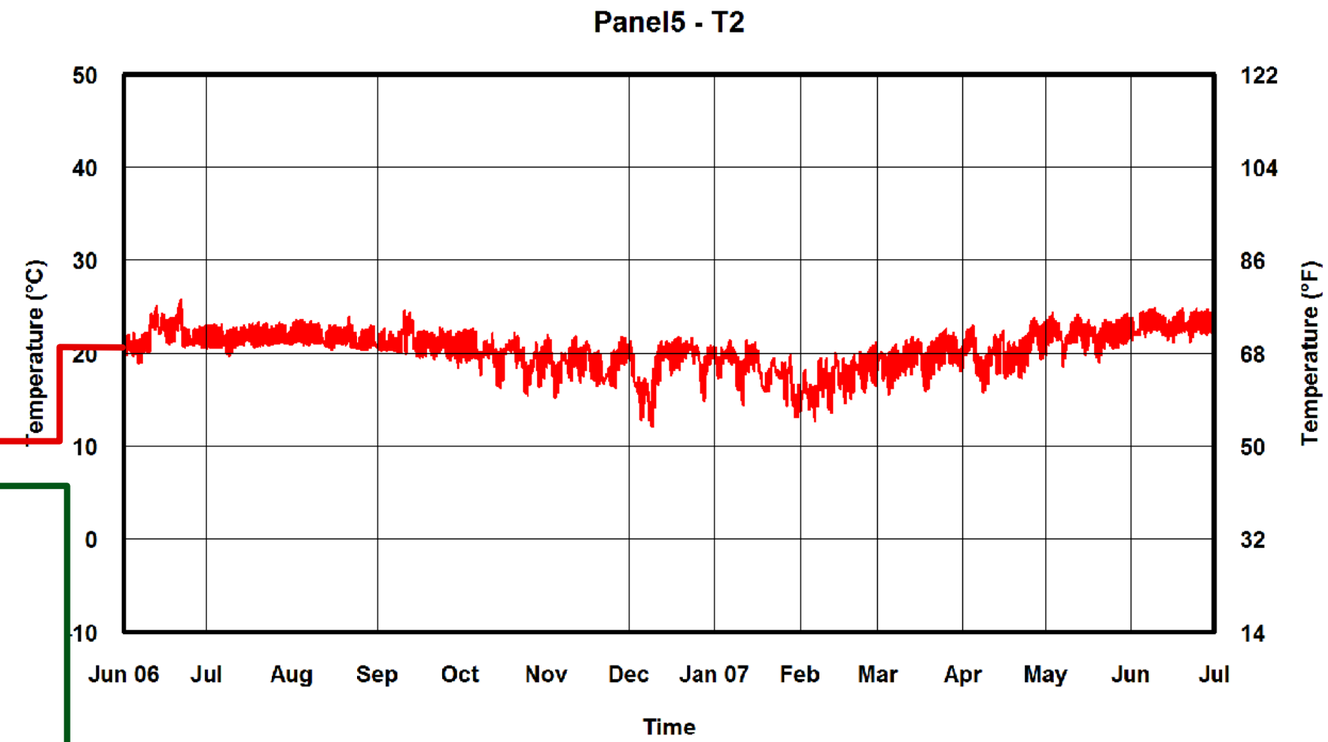
Panel5 - T2
Temperature (°C)
Temperature (°F)
50
40
30
20
10
0
-10
122
104
86
68
50
32
14
Jun 06
Jul
Aug
Sep
Oct
Nov
Dec
Jan 07
Feb
Mar
Apr
May
Jun
Jul
Time

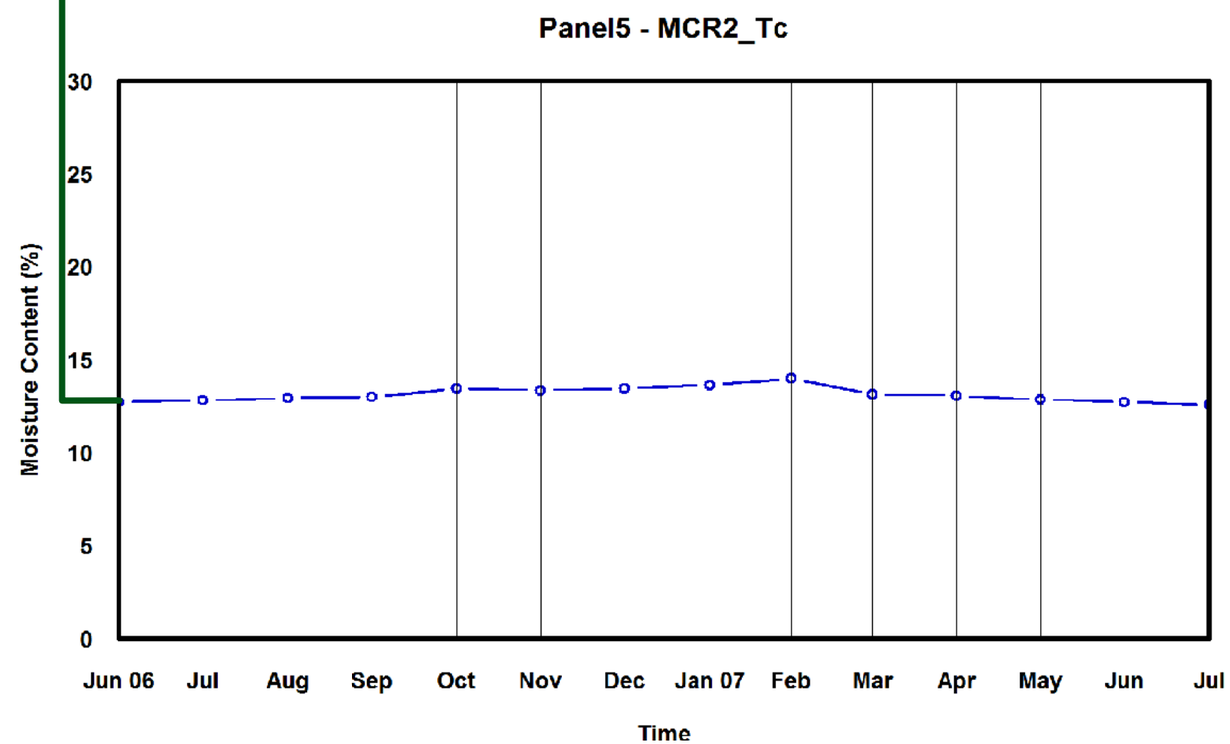
Panel5 - MCR2_Tc
Moisture Content (%)
30
25
20
15
10
5
0
Jun 06
Jul
Aug
Sep
Oct
Nov
Dec
Jan 07
Feb
Mar
Apr
May
Jun
Jul
Time

Panel 5

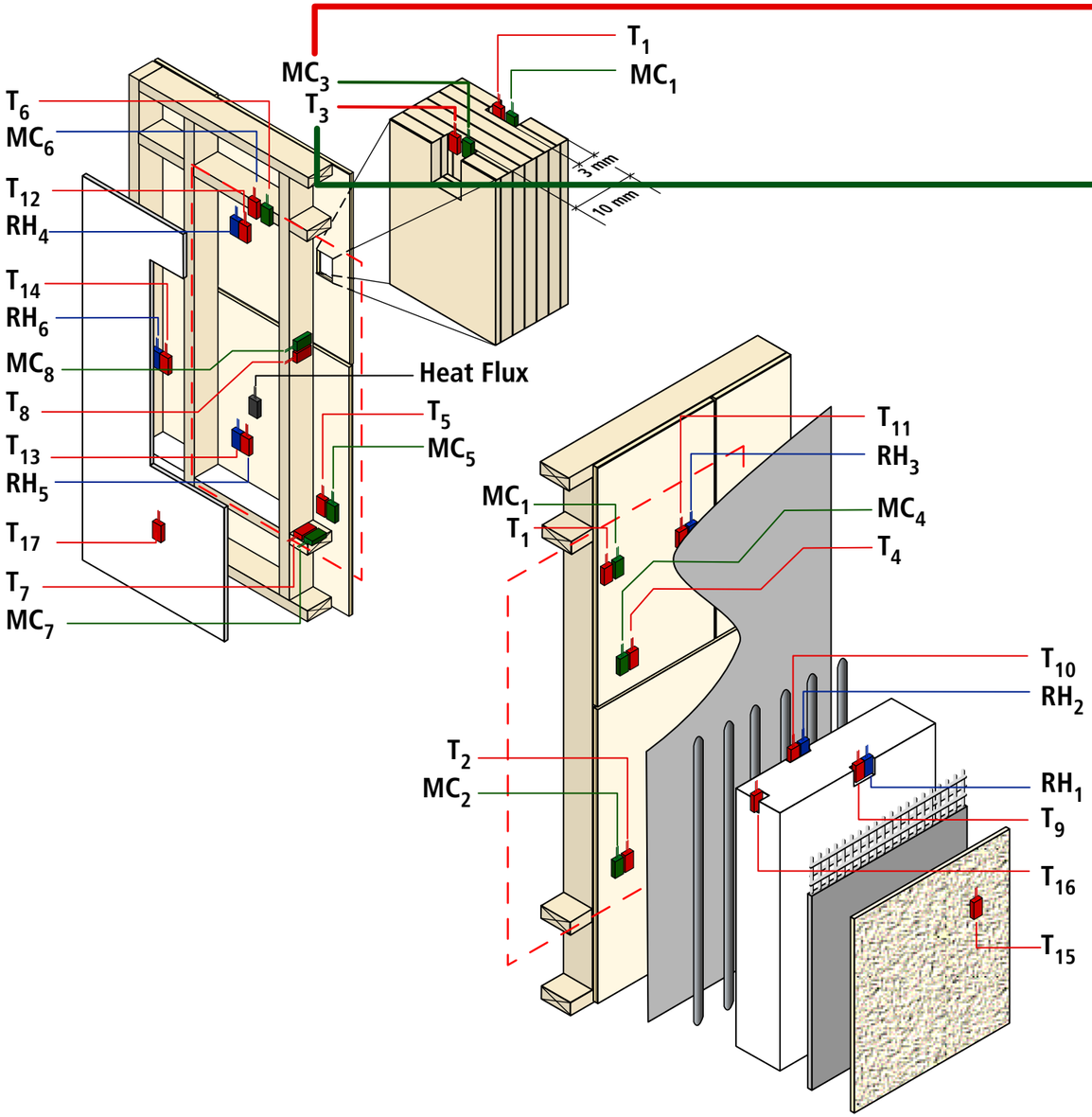
T_6
MC_6
T_{12}
RH_4
T_{14}
RH_6
MC_8
T_8
T_{13}
RH_5
T_{17}
T_7
MC_7
MC_3
T_3
T_1
MC_1
3 mm
10 mm
Heat Flux
T_5
MC_5
MC_1
T_1
T_{11}
RH_3
MC_4
T_4
T_{10}
RH_2
T_2
MC_2
RH_1
T_9
T_{16}
T_{15}

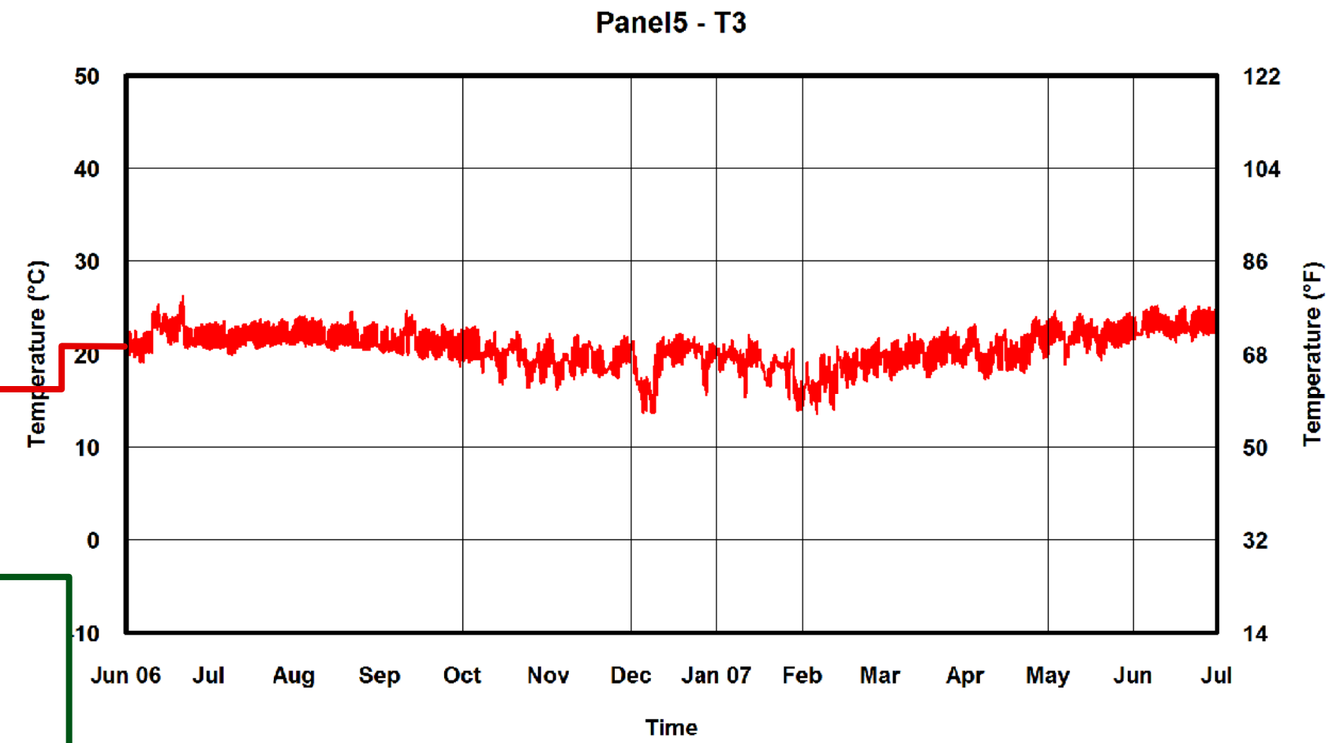
Panel5 - T3
Temperature (°C)
Temperature (°F)
50
40
30
20
10
0
-10
122
104
86
68
50
32
14
Jun 06
Jul
Aug
Sep
Oct
Nov
Dec
Jan 07
Feb
Mar
Apr
May
Jun
Jul
Time

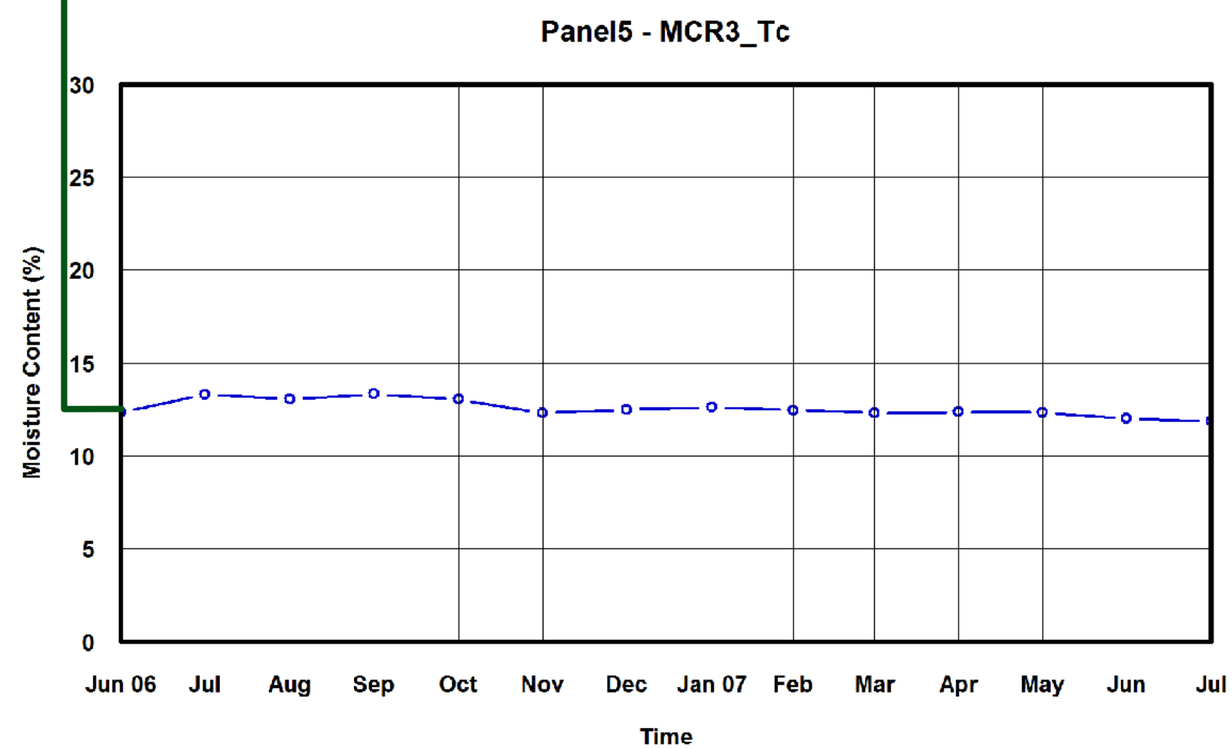
Panel5 - MCR3_Tc
Moisture Content (%)
30
25
20
15
10
5
0
Jun 06
Jul
Aug
Sep
Oct
Nov
Dec
Jan 07
Feb
Mar
Apr
May
Jun
Jul
Time

Panel 5

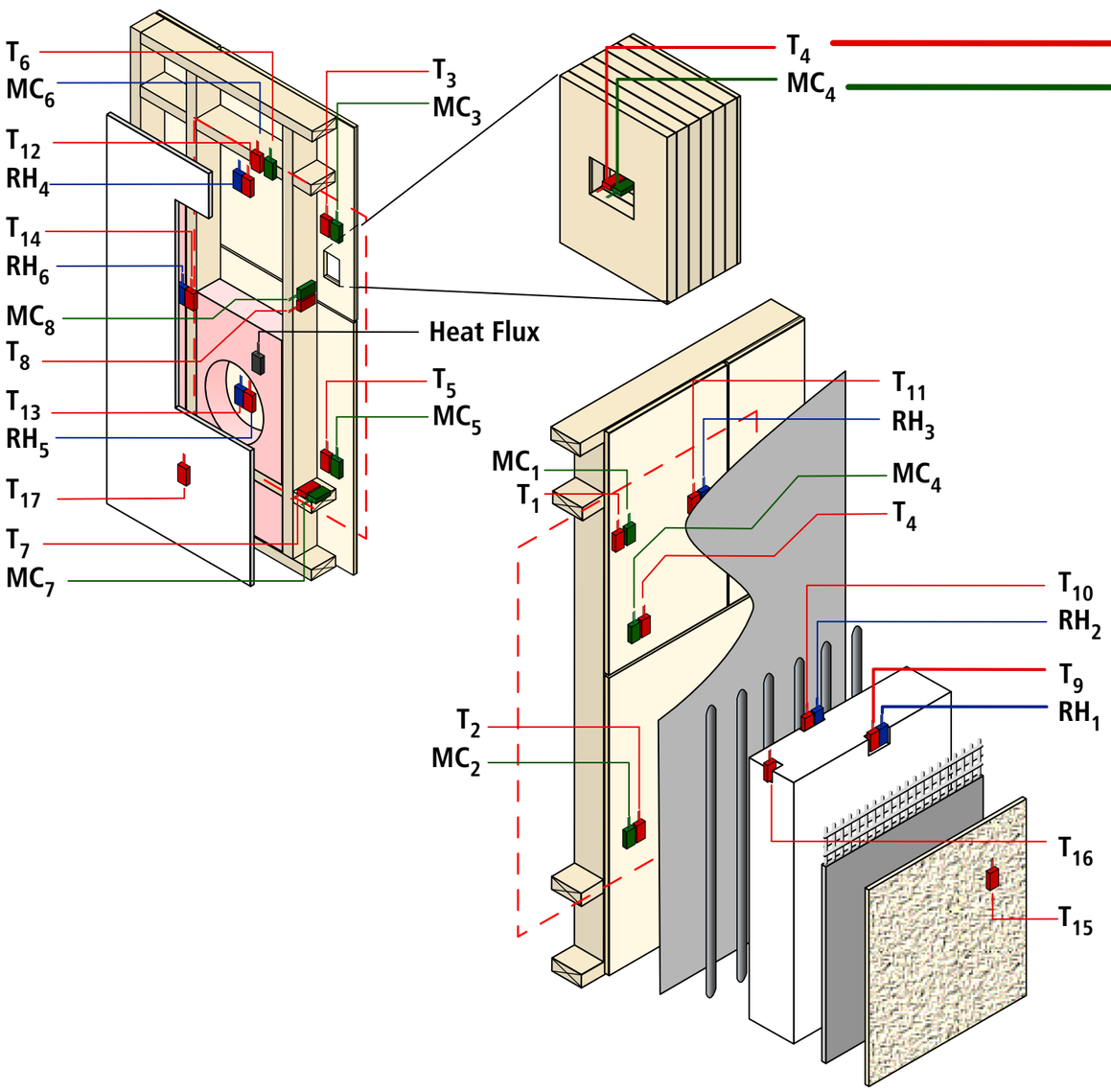
T_6
MC_6
T_{12}
RH_4
T_{14}
RH_6
MC_8
T_8
T_{13}
RH_5
T_{17}
T_7
MC_7
T_3
MC_3
Heat Flux
T_5
MC_5
T_4
MC_4
MC_1
T_1
T_2
MC_2
T_{11}
RH_3
MC_4
T_4
T_{10}
RH_2
T_9
RH_1
T_{16}
T_{15}

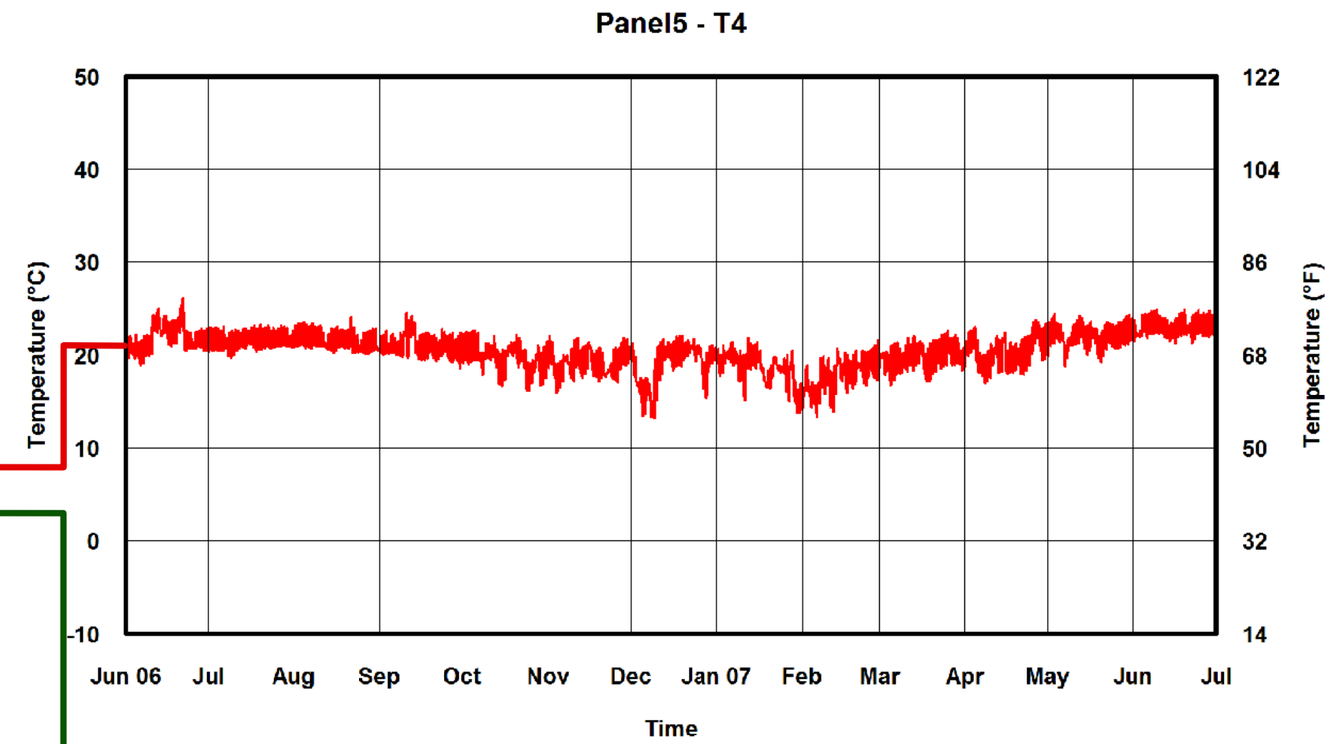
Panel5 - T4
Temperature (°C)
Temperature (°F)
50
40
30
20
10
0
-10
122
104
86
68
50
32
14
Jun 06
Jul
Aug
Sep
Oct
Nov
Dec
Jan 07
Feb
Mar
Apr
May
Jun
Jul
Time

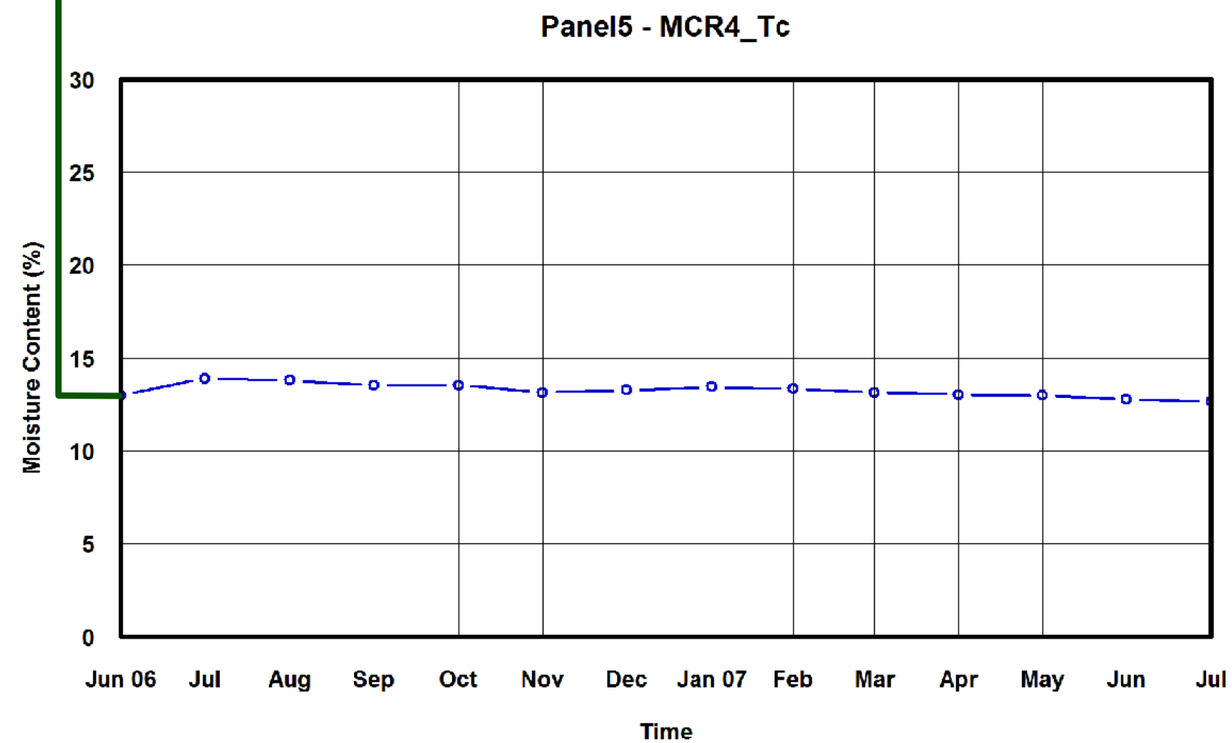
Panel5 - MCR4_Tc
Moisture Content (%)
30
25
20
15
10
5
0
Jun 06
Jul
Aug
Sep
Oct
Nov
Dec
Jan 07
Feb
Mar
Apr
May
Jun
Jul
Time

Panel 5

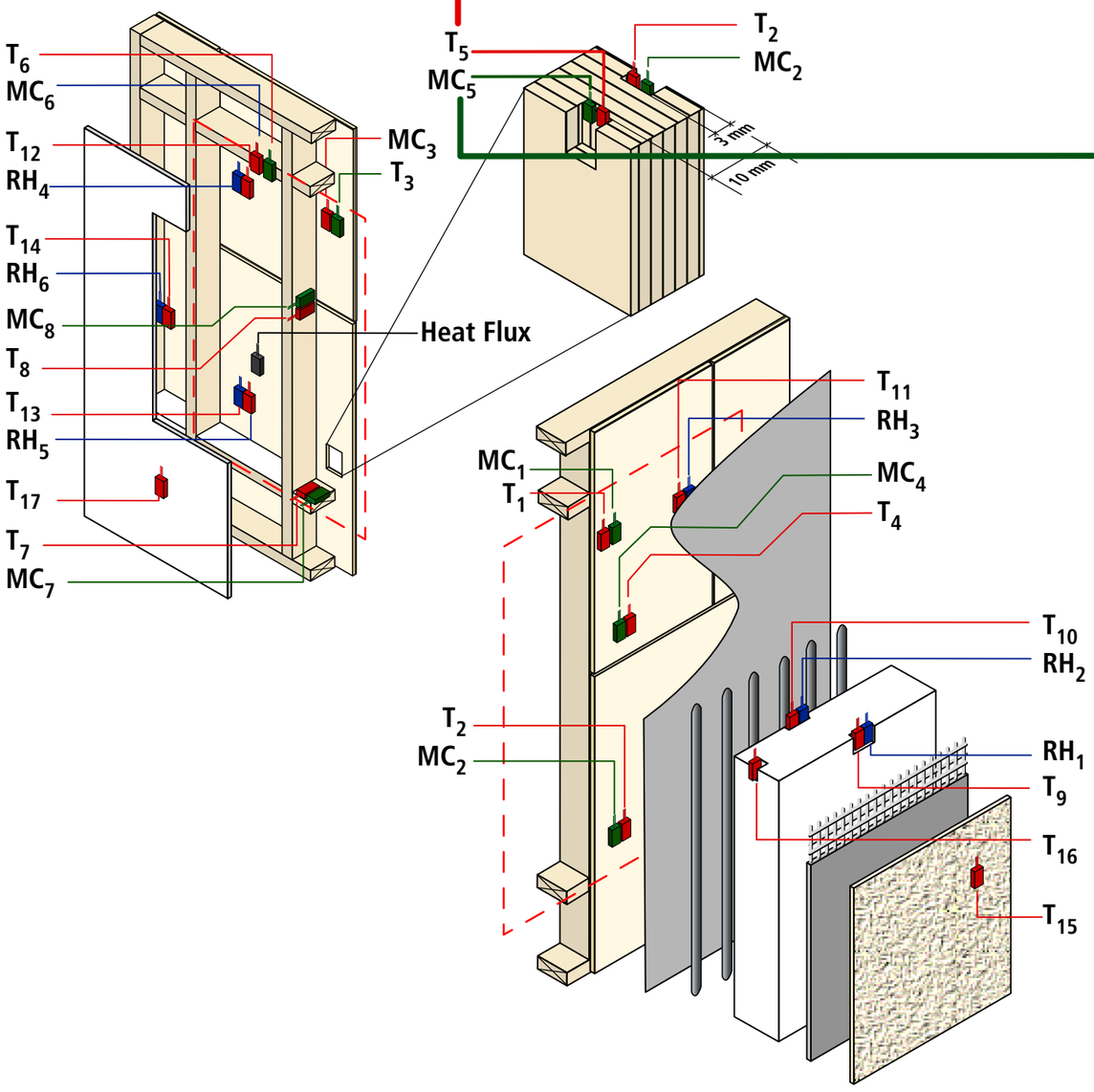
T_6
MC_6
T_{12}
RH_4
T_{14}
RH_6
MC_8
T_8
T_{13}
RH_5
T_{17}
T_7
MC_7
MC_3
T_3
Heat Flux
T_5
MC_5
T_2
MC_2
3 mm
10 mm
T_{11}
RH_3
MC_4
T_4
MC_1
T_1
T_{10}
RH_2
T_2
MC_2
RH_1
T_9
T_{16}
T_{15}

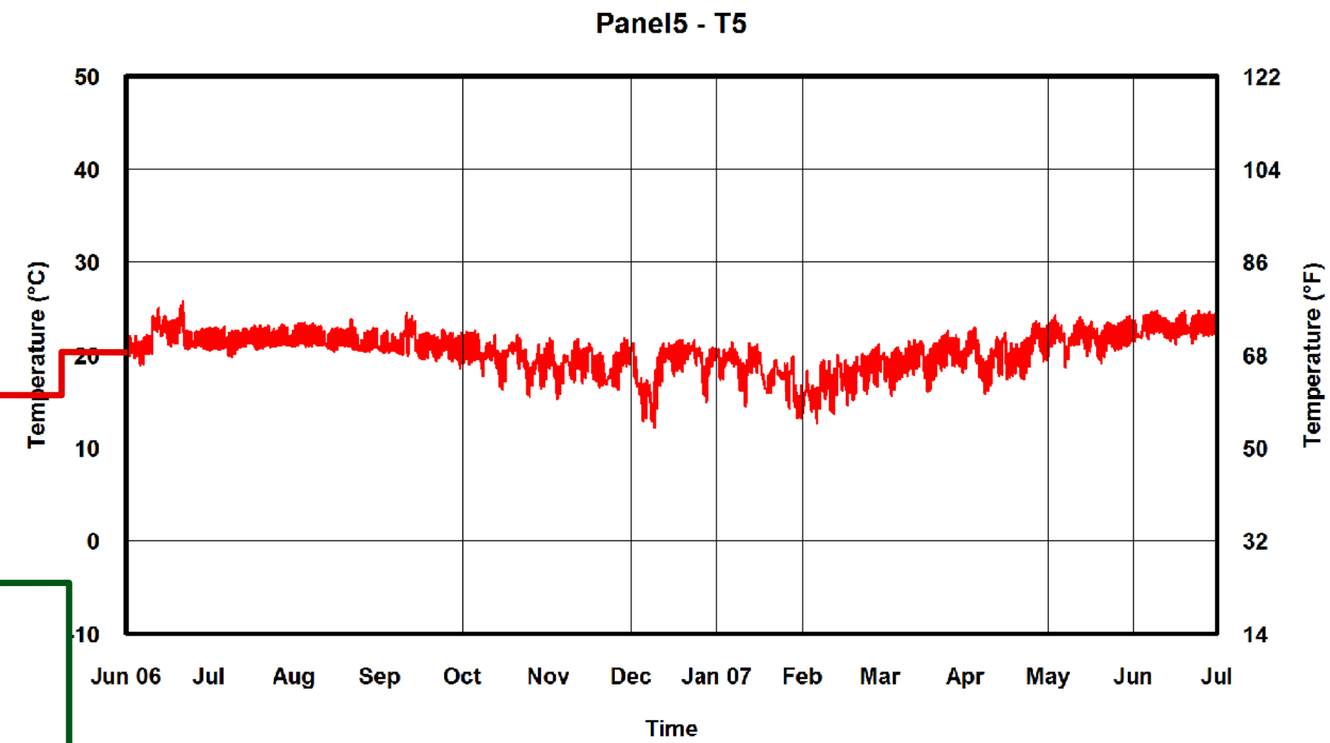
Panel5 - T5
Temperature (°C)
Temperature (°F)
50
40
30
20
10
0
-10
122
104
86
68
50
32
14
Jun 06
Jul
Aug
Sep
Oct
Nov
Dec
Jan 07
Feb
Mar
Apr
May
Jun
Jul
Time

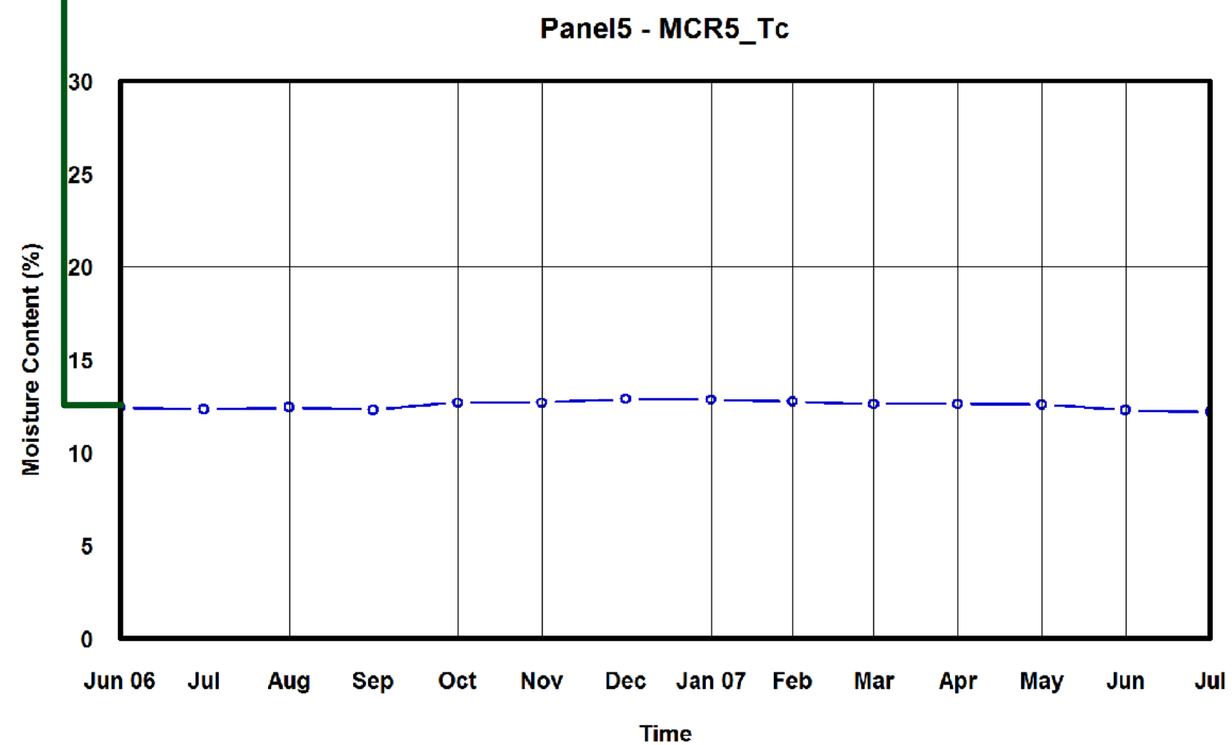
Panel5 - MCR5_Tc
Moisture Content (%)
30
25
20
15
10
5
0
Jun 06
Jul
Aug
Sep
Oct
Nov
Dec
Jan 07
Feb
Mar
Apr
May
Jun
Jul
Time

Panel 5

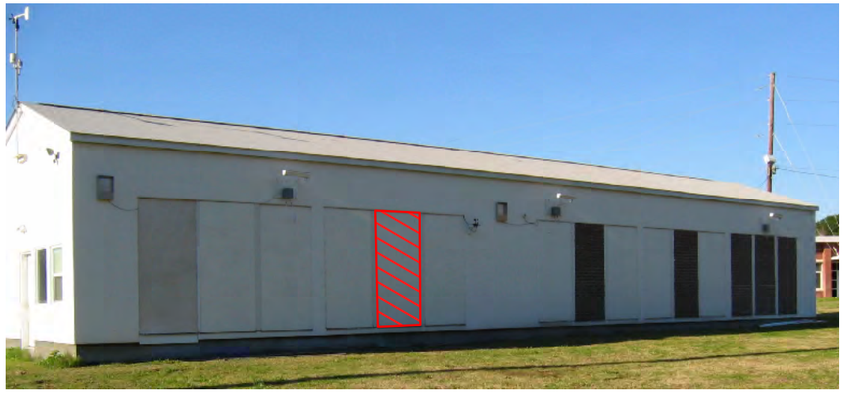

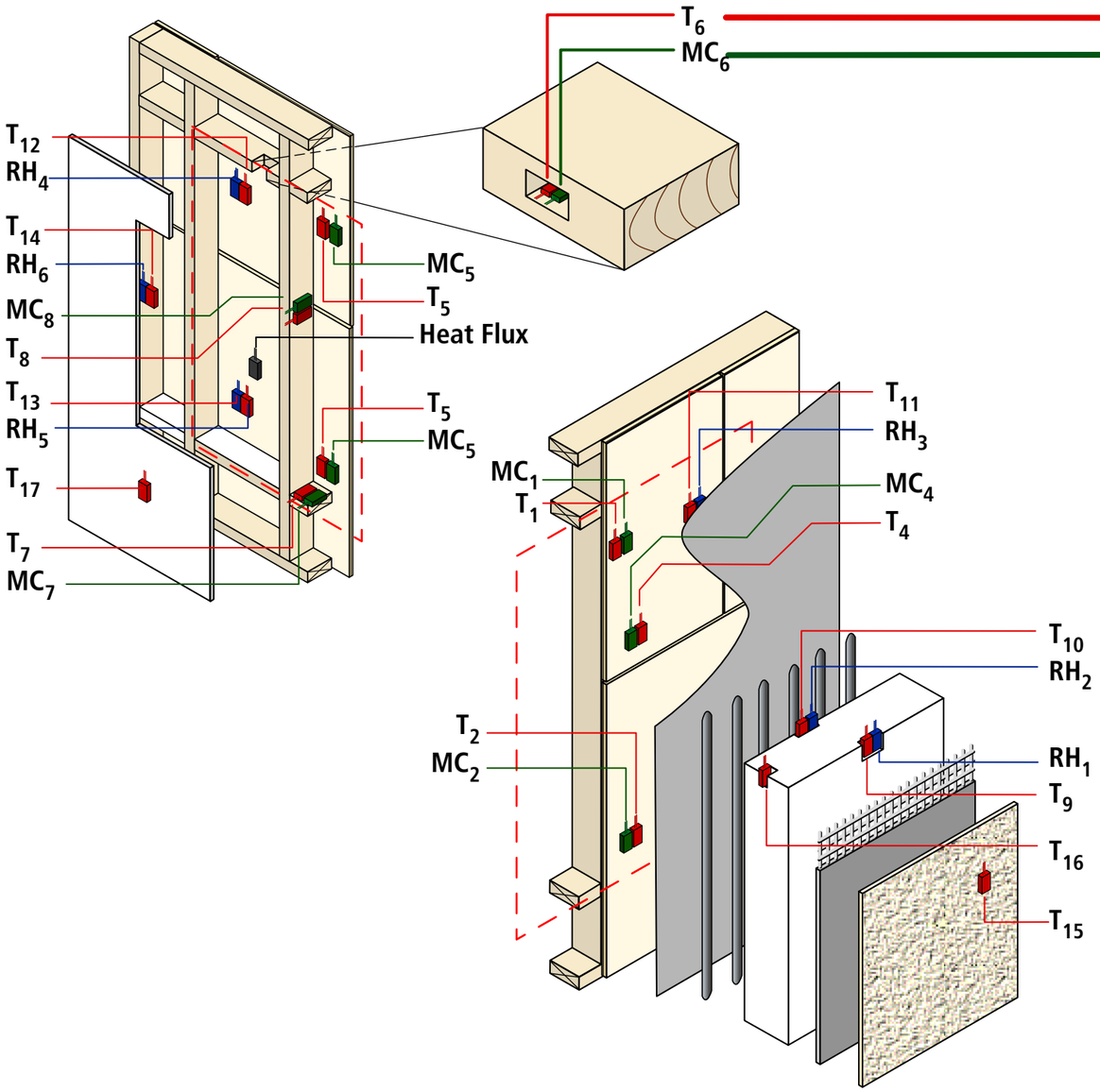
T_6
MC_6
T_{12}
RH_4
T_{14}
RH_6
MC_8
T_8
T_{13}
RH_5
T_{17}
T_7
MC_7
MC_5
T_5
Heat Flux
T_5
MC_5
T_{11}
RH_3
MC_1
T_1
MC_4
T_4
T_{10}
RH_2
T_2
MC_2
RH_1
T_9
T_{16}
T_{15}

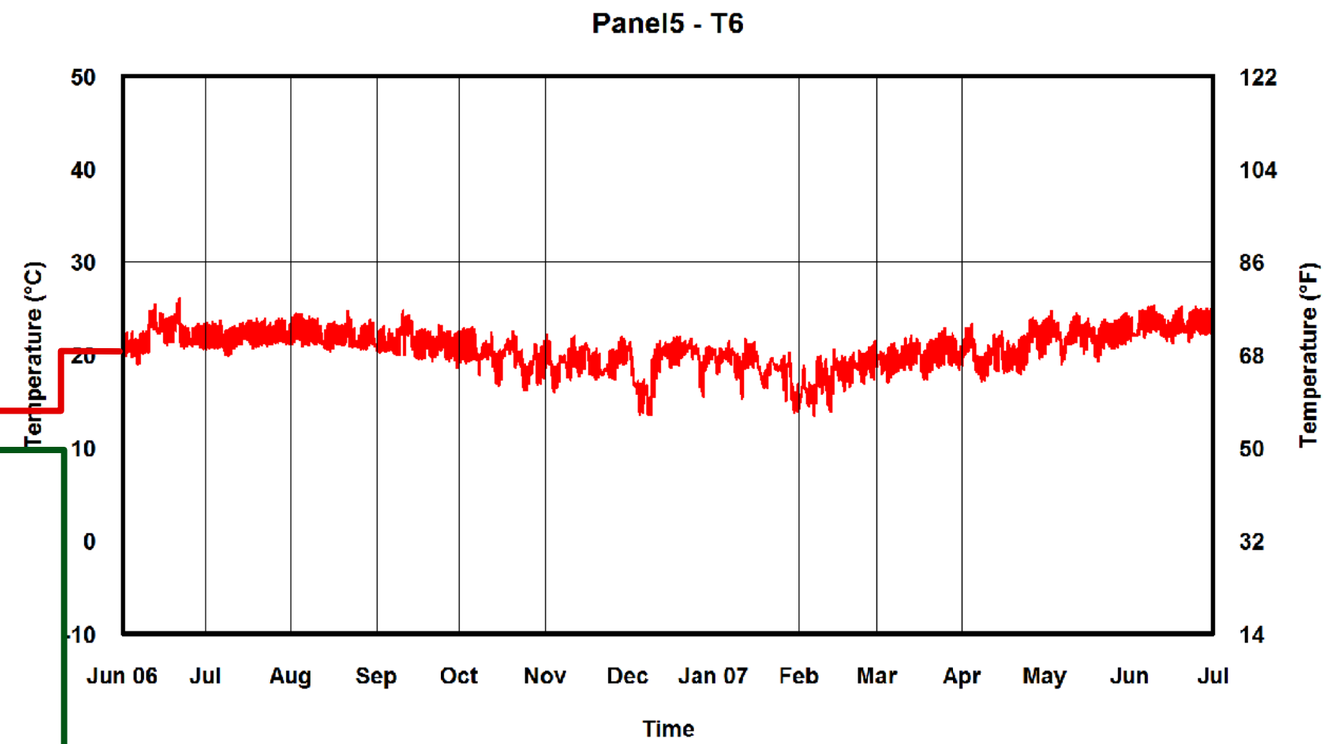
Panel5 - T6
Temperature (°C)
50
40
30
20
10
0
-10
Temperature (°F)
122
104
86
68
50
32
14
Jun 06
Jul
Aug
Sep
Oct
Nov
Dec
Jan 07
Feb
Mar
Apr
May
Jun
Jul
Time

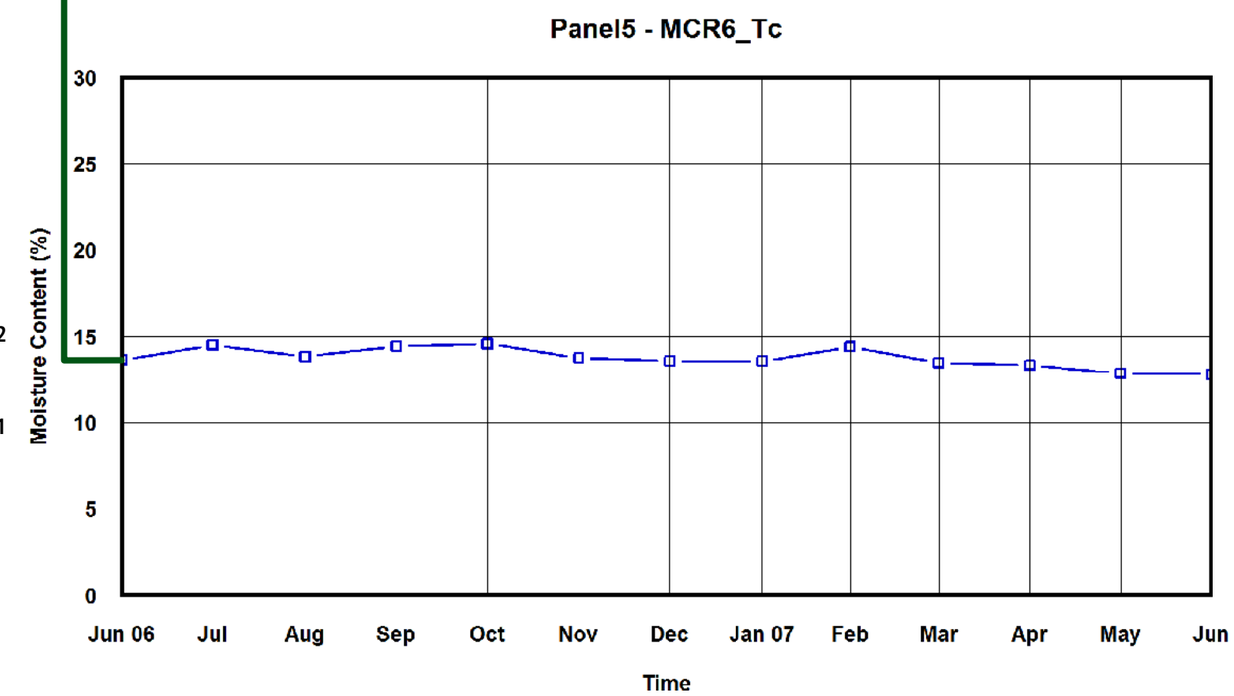
Panel5 - MCR6_Tc
Moisture Content (%)
30
25
20
15
10
5
0
Jun 06
Jul
Aug
Sep
Oct
Nov
Dec
Jan 07
Feb
Mar
Apr
May
Jun
Time

Panel 5

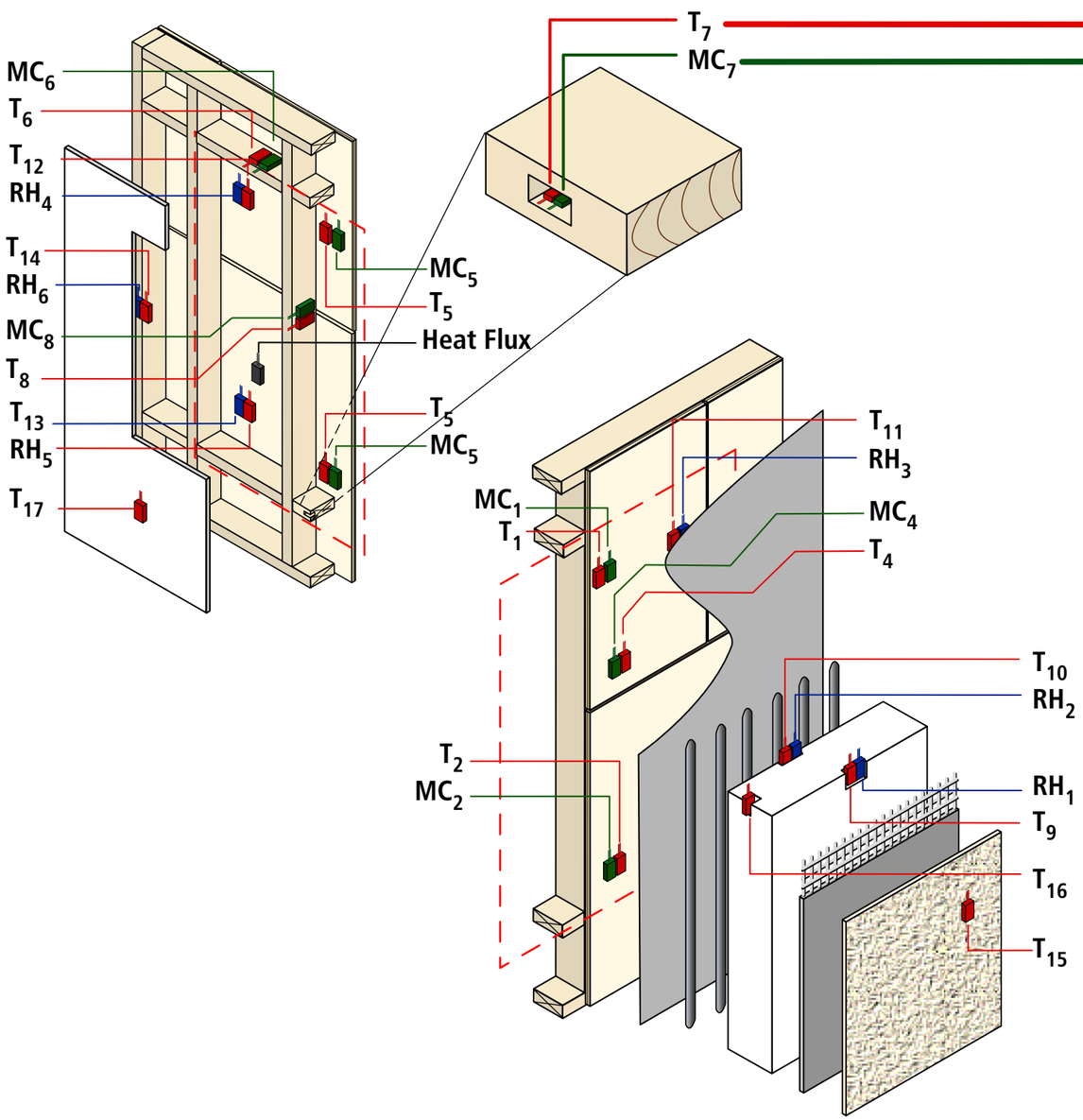
MC_6
T_6
T_{12}
RH_4
T_{14}
RH_6
MC_8
T_8
T_{13}
RH_5
T_{17}
MC_5
T_5
Heat Flux
T_5
MC_5
T_7
MC_7
T_{11}
RH_3
MC_4
T_4
MC_1
T_1
T_{10}
RH_2
T_2
MC_2
RH_1
T_9
T_{16}
T_{15}

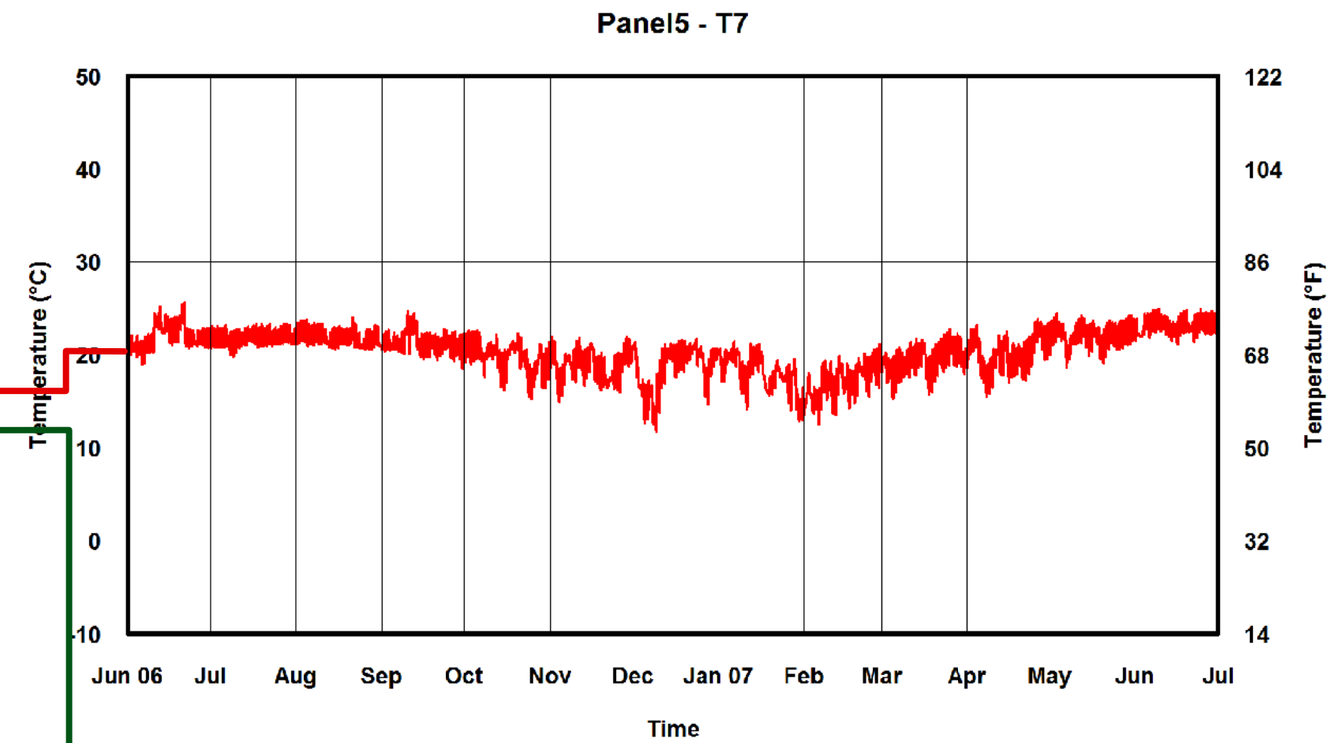
Panel5 - T7
Temperature (°C)
50
40
30
20
10
0
-10
Temperature (°F)
122
104
86
68
50
32
14
Jun 06
Jul
Aug
Sep
Oct
Nov
Dec
Jan 07
Feb
Mar
Apr
May
Jun
Jul
Time

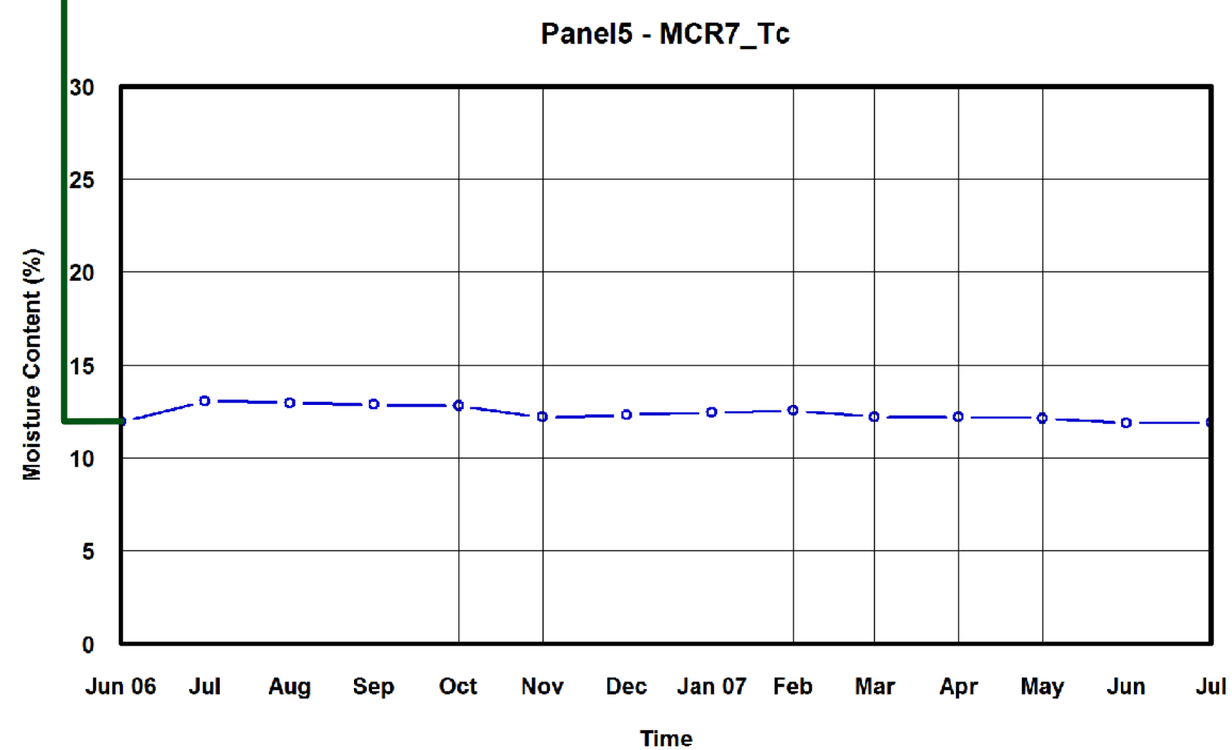
Panel5 - MCR7_Tc
Moisture Content (%)
30
25
20
15
10
5
0
Jun 06
Jul
Aug
Sep
Oct
Nov
Dec
Jan 07
Feb
Mar
Apr
May
Jun
Jul
Time

Panel 5

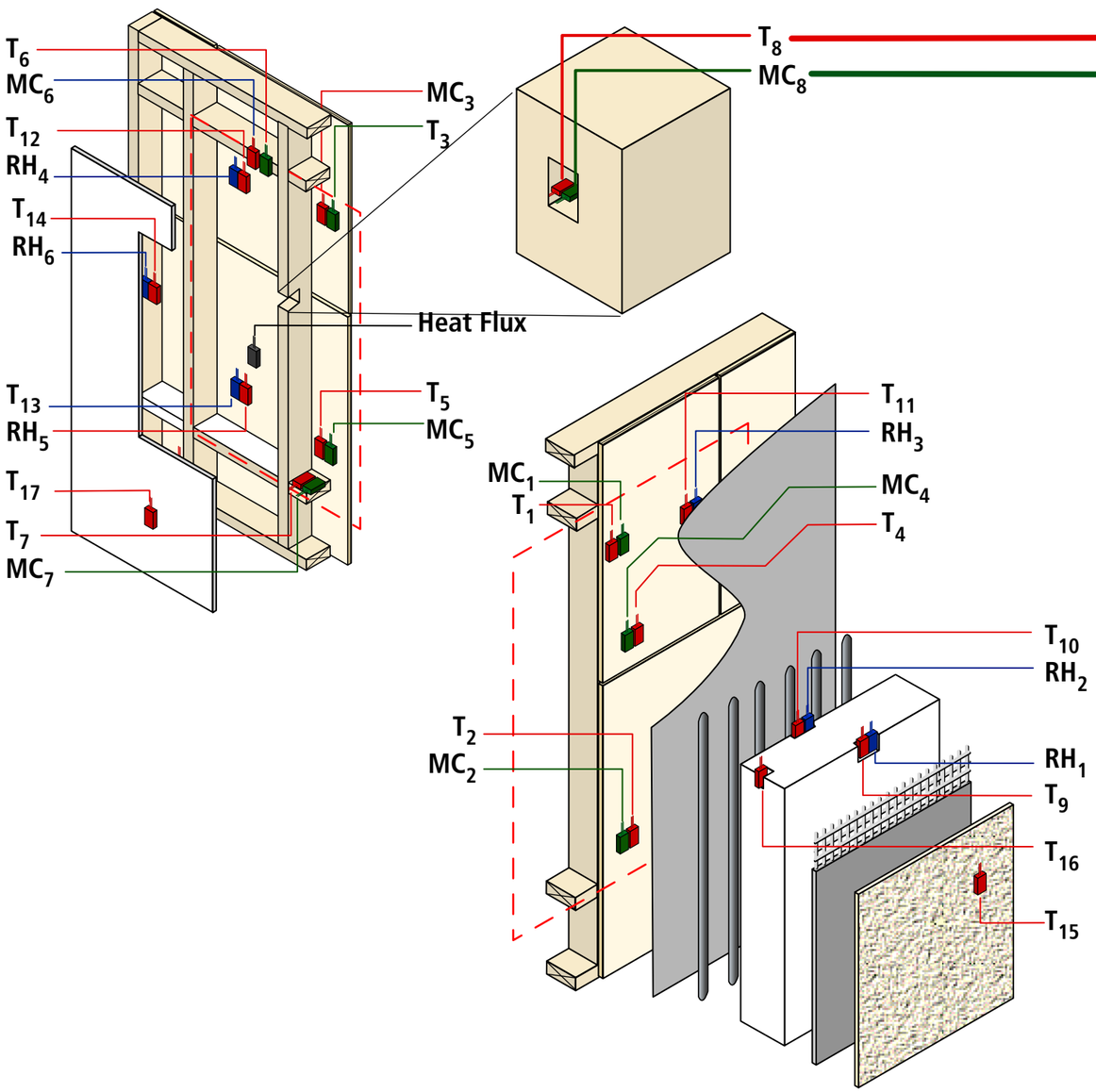
T_6
MC_6
T_{12}
RH_4
T_{14}
RH_6
MC_3
T_3
Heat Flux
T_{13}
RH_5
T_5
MC_5
T_{17}
T_7
MC_7
T_8
MC_8
T_{11}
RH_3
MC_1
T_1
MC_4
T_4
T_{10}
RH_2
T_2
MC_2
RH_1
T_9
T_{16}
T_{15}

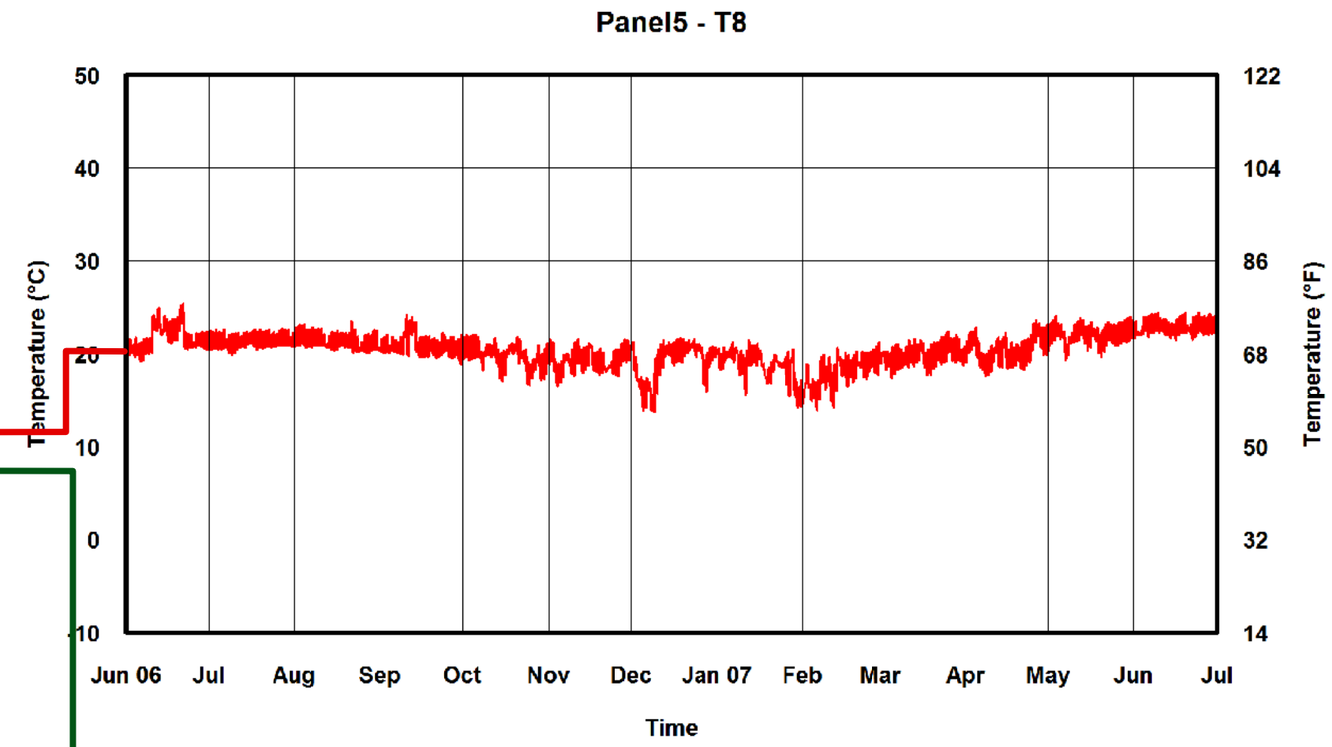
Panel5 - T8
Temperature (°C)
50
40
30
20
10
0
-10
Temperature (°F)
122
104
86
68
50
32
14
Jun 06
Jul
Aug
Sep
Oct
Nov
Dec
Jan 07
Feb
Mar
Apr
May
Jun
Jul
Time

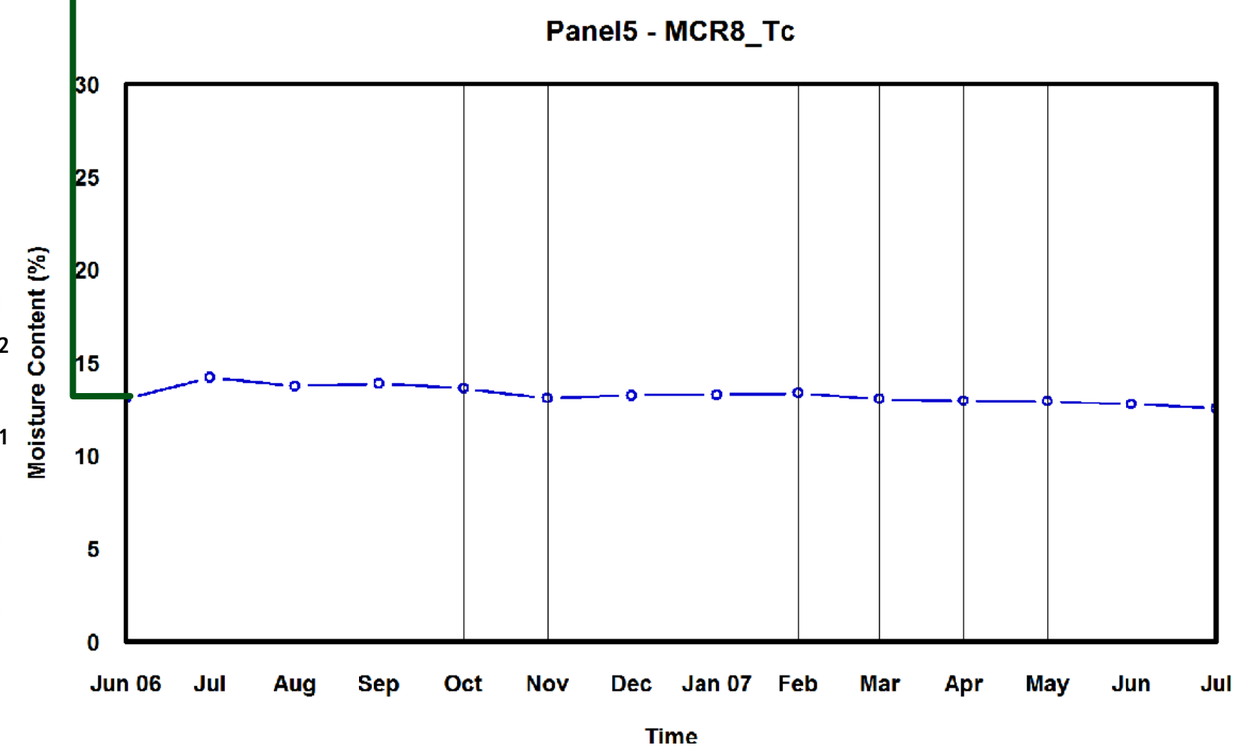
Panel5 - MCR8_Tc
Moisture Content (%)
30
25
20
15
10
5
0
Jun 06
Jul
Aug
Sep
Oct
Nov
Dec
Jan 07
Feb
Mar
Apr
May
Jun
Jul
Time

Panel 5

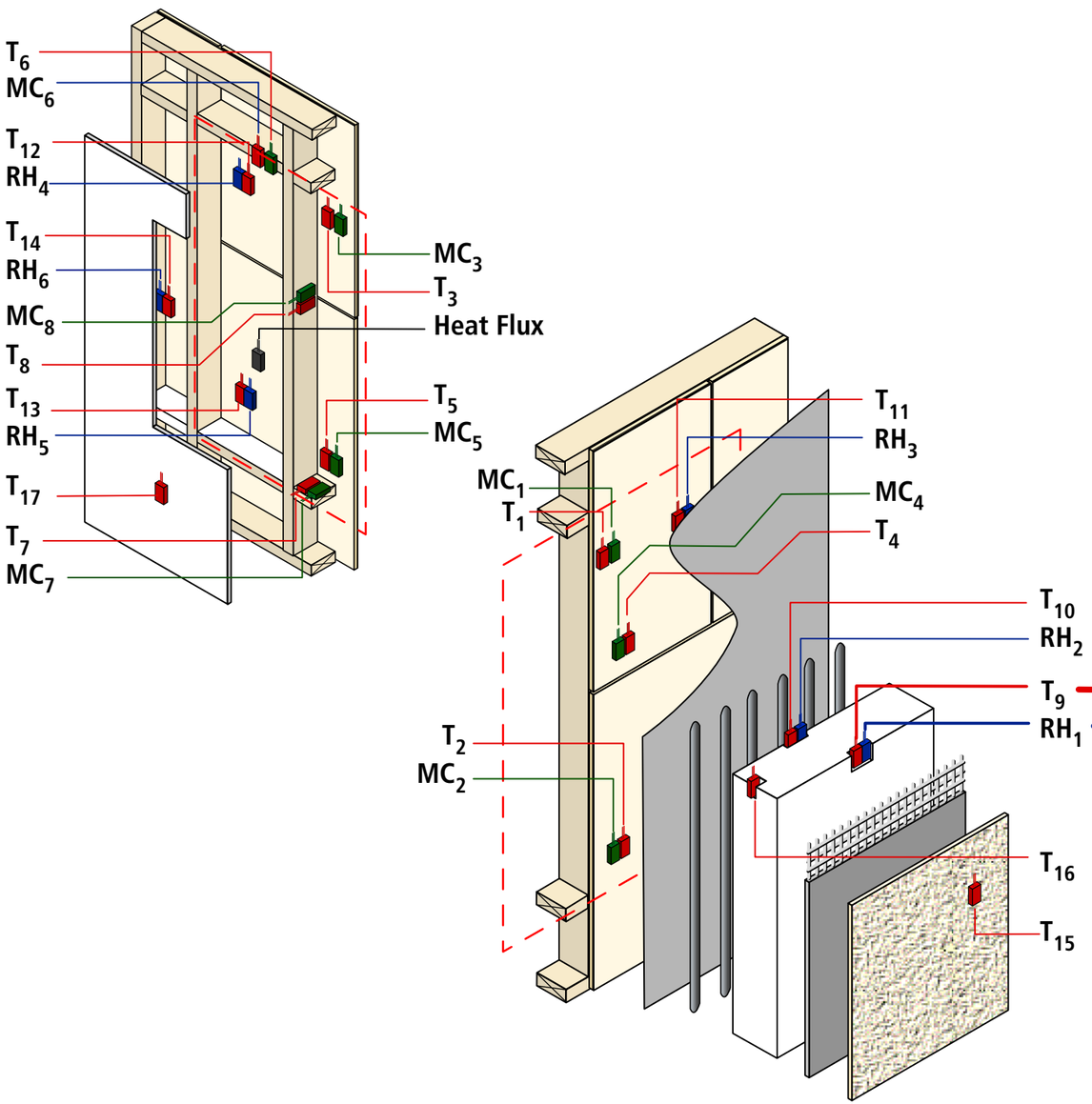
T_6
MC_6
T_{12}
RH_4
T_{14}
RH_6
MC_8
T_8
T_{13}
RH_5
T_{17}
T_7
MC_7
MC_3
T_3
Heat Flux
T_5
MC_5
MC_1
T_1
T_2
MC_2
T_{11}
RH_3
MC_4
T_4
T_{10}
RH_2
T_9
RH_1
T_{16}
T_{15}

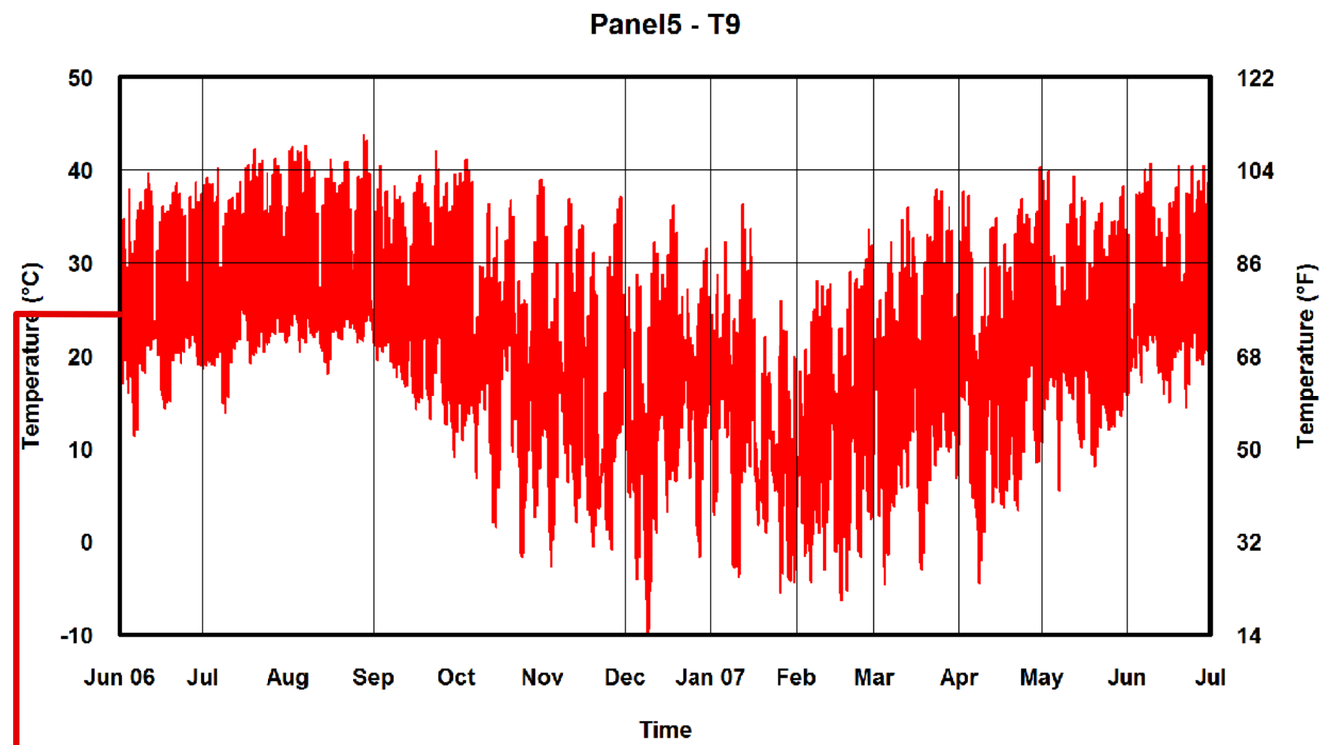
Panel5 - T9
Temperature (°C)
Temperature (°F)
50
40
30
20
10
0
-10
122
104
86
68
50
32
14
Jun 06
Jul
Aug
Sep
Oct
Nov
Dec
Jan 07
Feb
Mar
Apr
May
Jun
Jul
Time

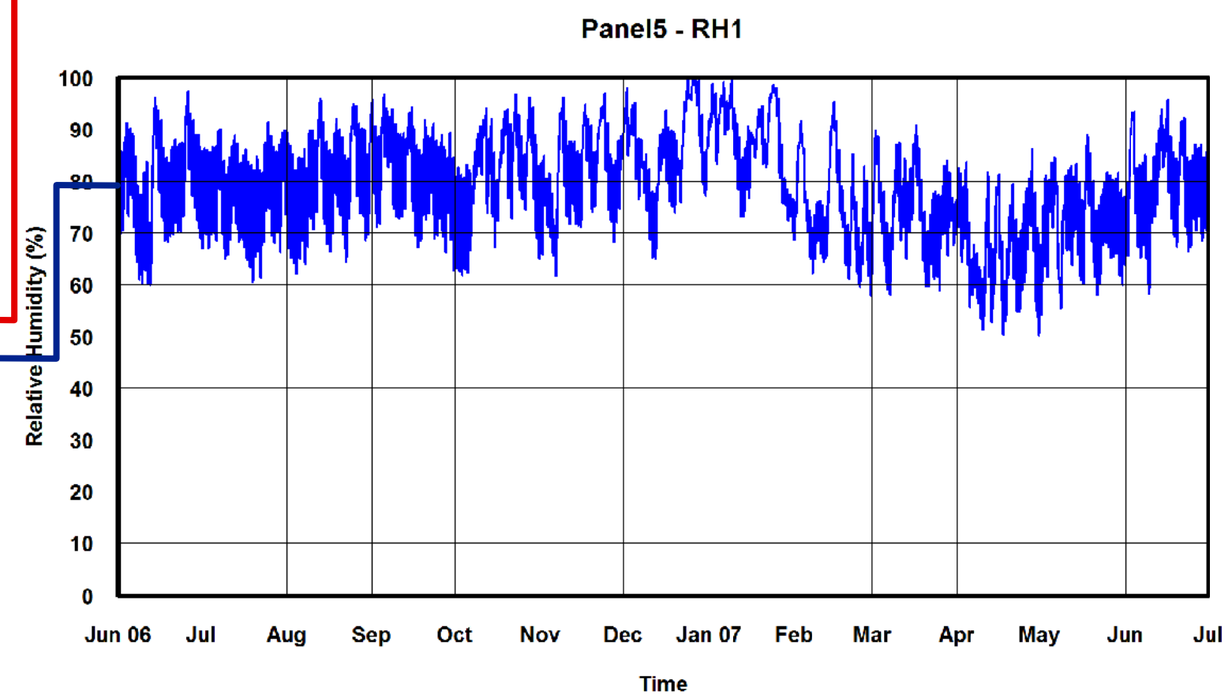
Panel5 - RH1
Relative Humidity (%)
100
90
80
70
60
50
40
30
20
10
0
Jun 06
Jul
Aug
Sep
Oct
Nov
Dec
Jan 07
Feb
Mar
Apr
May
Jun
Jul
Time

Panel 5

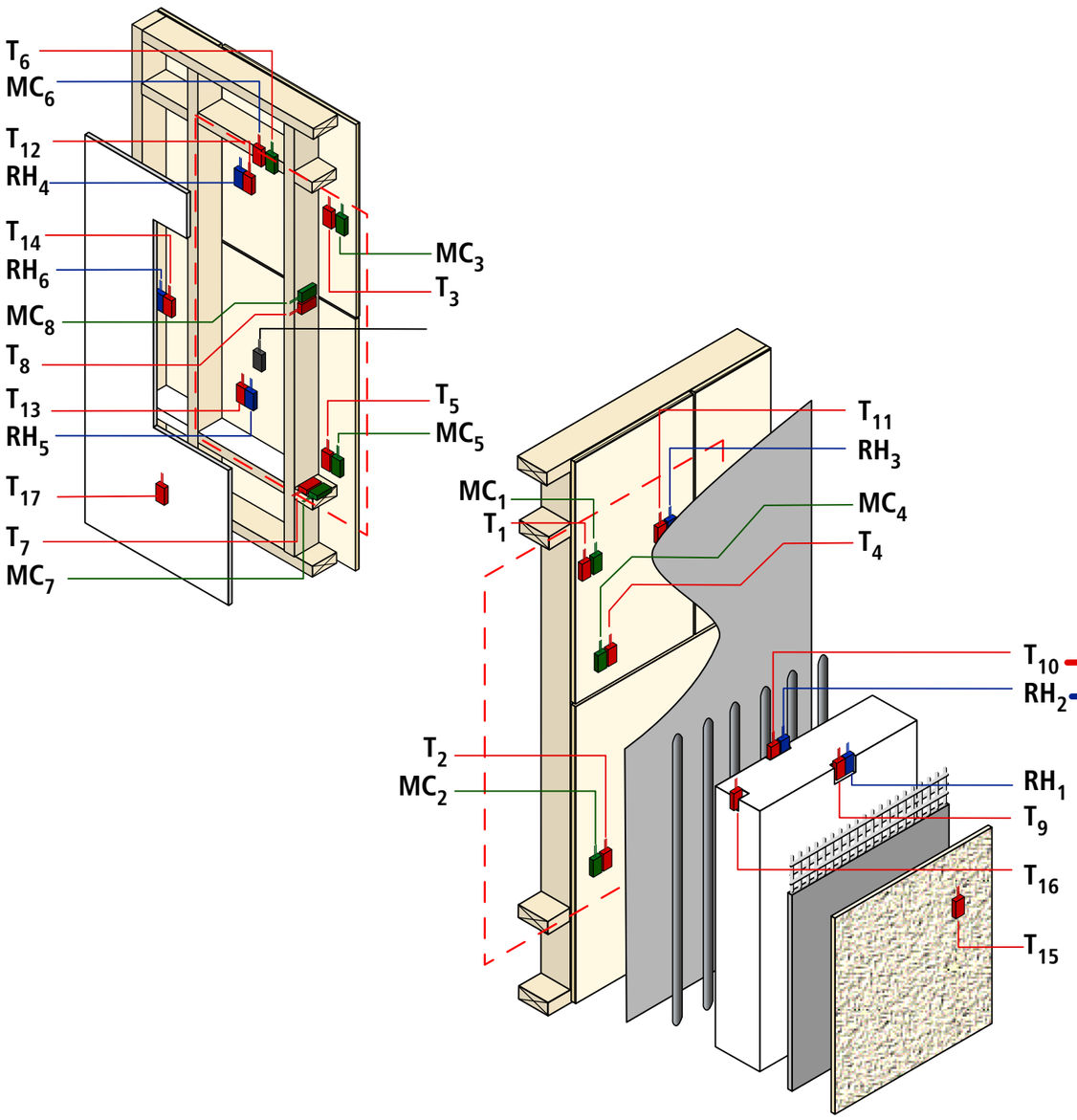
T_6
MC_6
T_{12}
RH_4
T_{14}
RH_6
MC_8
T_8
T_{13}
RH_5
T_{17}
T_7
MC_7
MC_3
T_3
T_5
MC_5
MC_1
T_1
T_{11}
RH_3
MC_4
T_4
T_{10}
RH_2
T_2
MC_2
RH_1
T_9
T_{16}
T_{15}

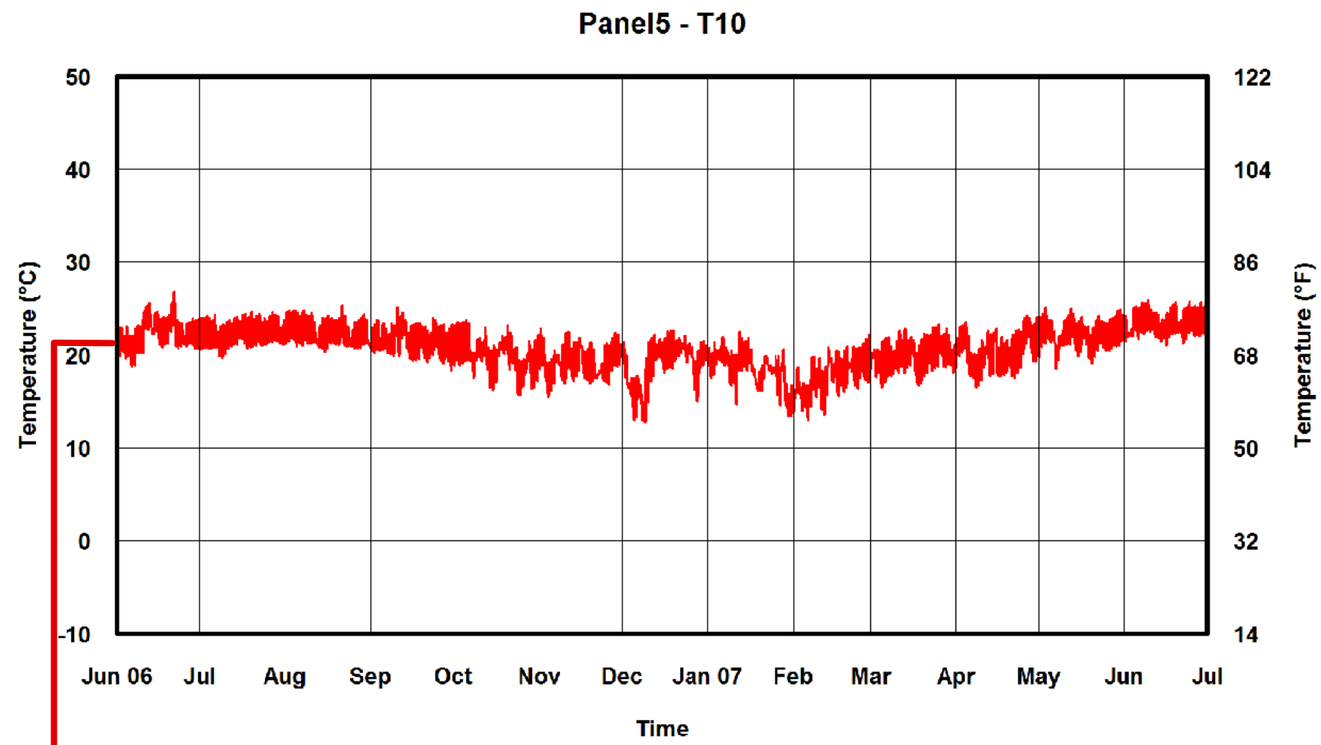
Panel5 - T10
Temperature (°C)
Temperature (°F)
50
40
30
20
10
0
-10
122
104
86
68
50
32
14
Jun 06
Jul
Aug
Sep
Oct
Nov
Dec
Jan 07
Feb
Mar
Apr
May
Jun
Jul
Time

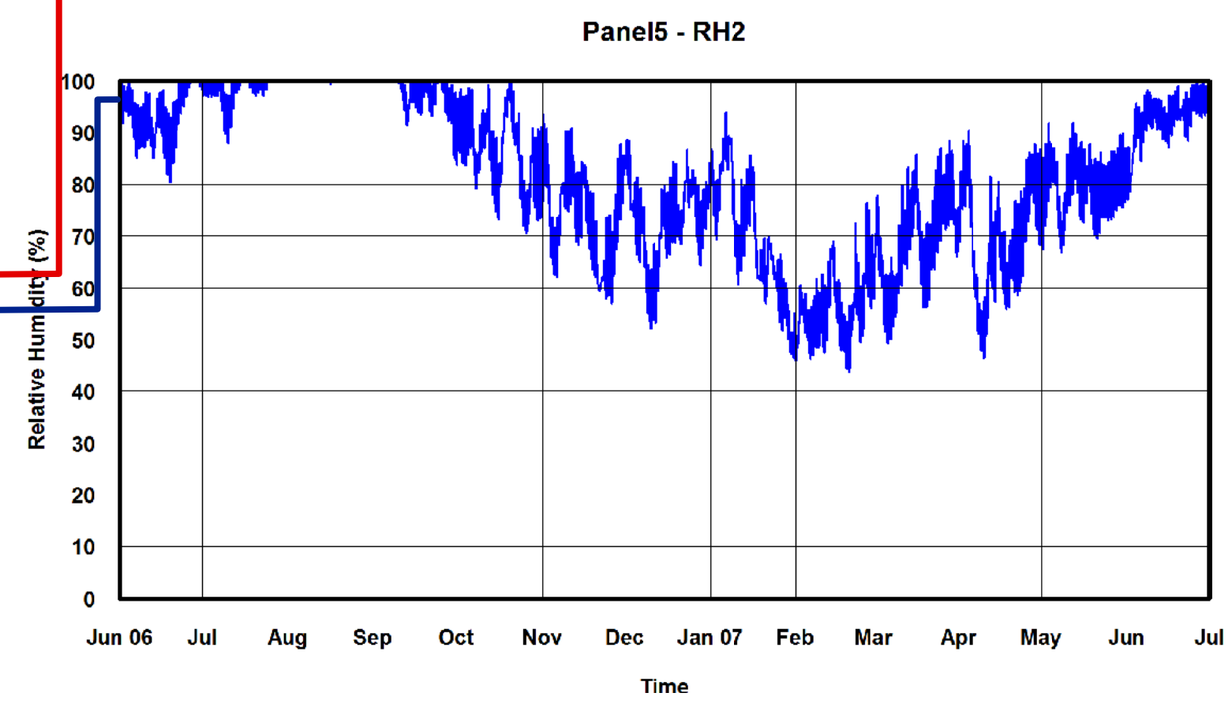
Panel5 - RH2
Relative Humidity (%)
100
90
80
70
60
50
40
30
20
10
0
Jun 06
Jul
Aug
Sep
Oct
Nov
Dec
Jan 07
Feb
Mar
Apr
May
Jun
Jul
Time

Panel 5

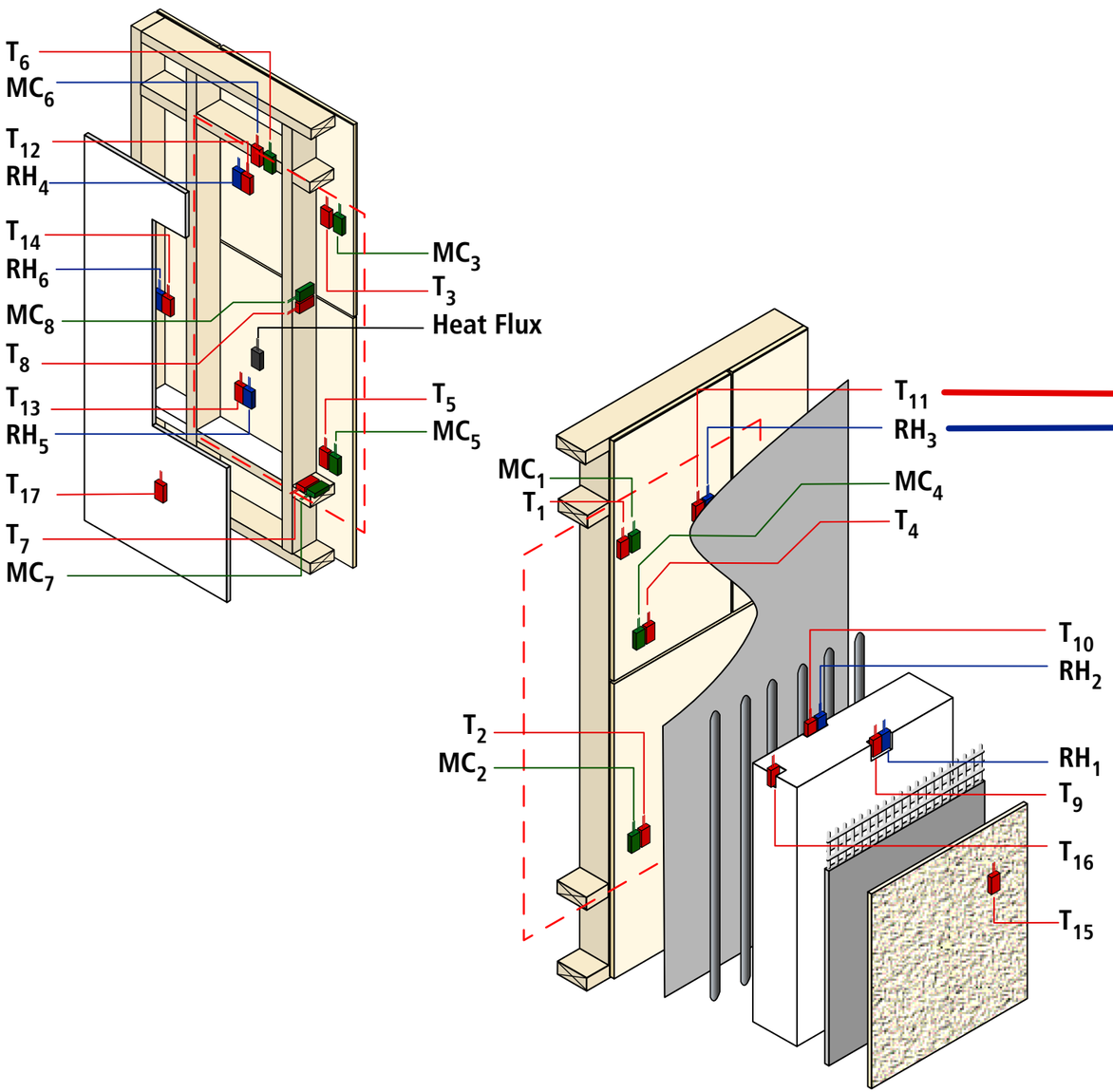
T_6
MC_6
T_{12}
RH_4
T_{14}
RH_6
MC_8
T_8
T_{13}
RH_5
T_{17}
T_7
MC_7
MC_3
T_3
Heat Flux
T_5
MC_5
MC_1
T_1
T_2
MC_2
T_{11}
RH_3
MC_4
T_4
T_{10}
RH_2
RH_1
T_9
T_{16}
T_{15}

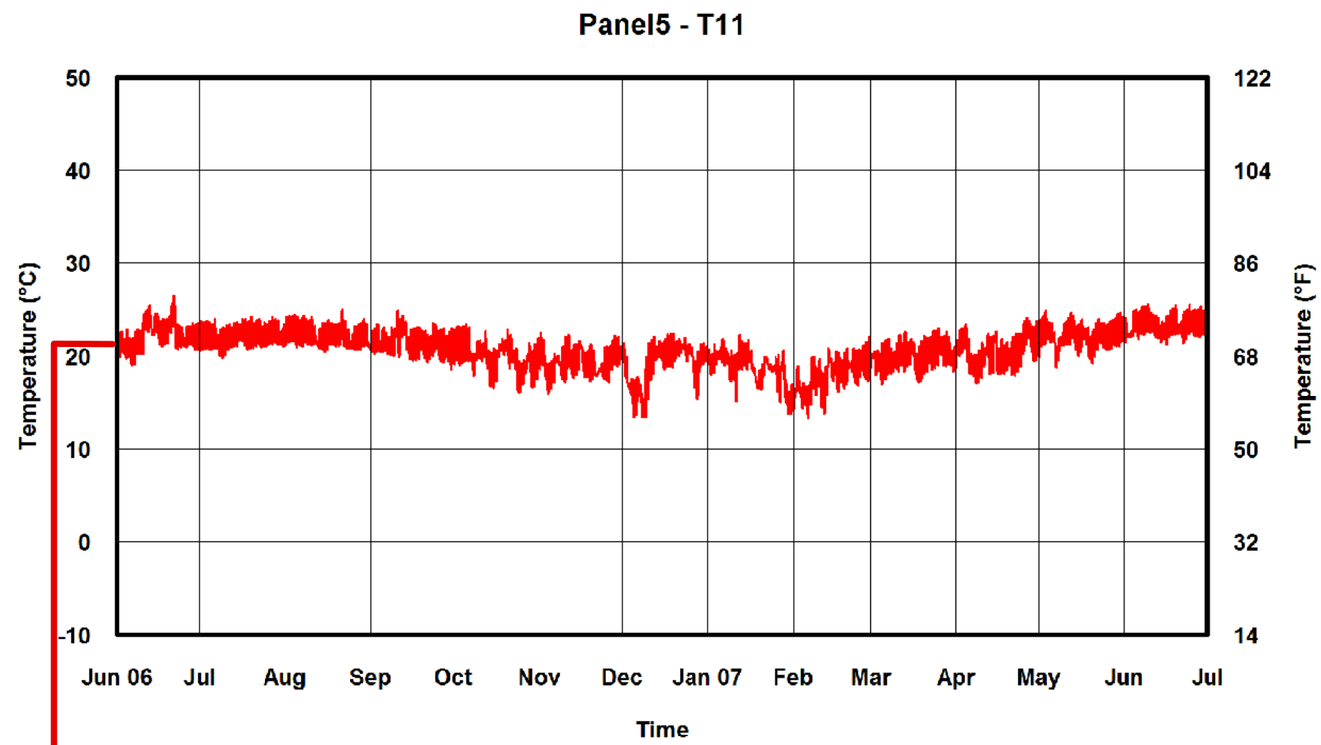
Panel5 - T11
Temperature (°C)
Temperature (°F)
50
40
30
20
10
0
-10
122
104
86
68
50
32
14
Jun 06
Jul
Aug
Sep
Oct
Nov
Dec
Jan 07
Feb
Mar
Apr
May
Jun
Jul
Time

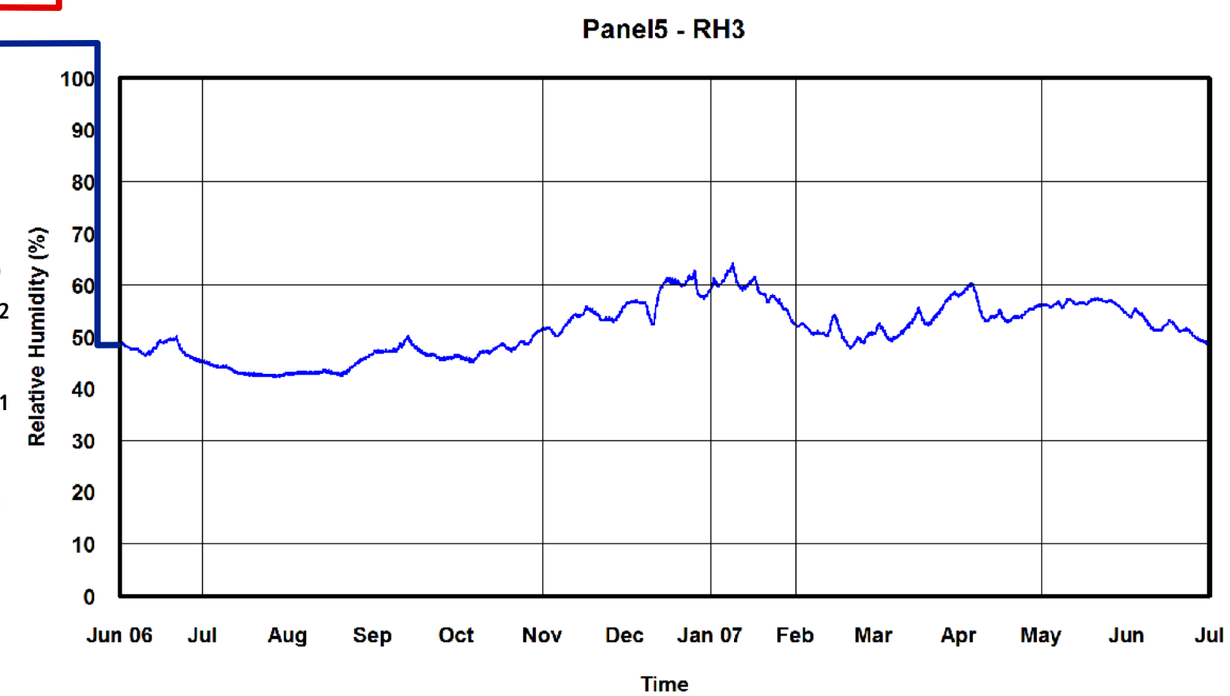
Panel5 - RH3
Relative Humidity (%)
100
90
80
70
60
50
40
30
20
10
0
Jun 06
Jul
Aug
Sep
Oct
Nov
Dec
Jan 07
Feb
Mar
Apr
May
Jun
Jul
Time

Panel 5

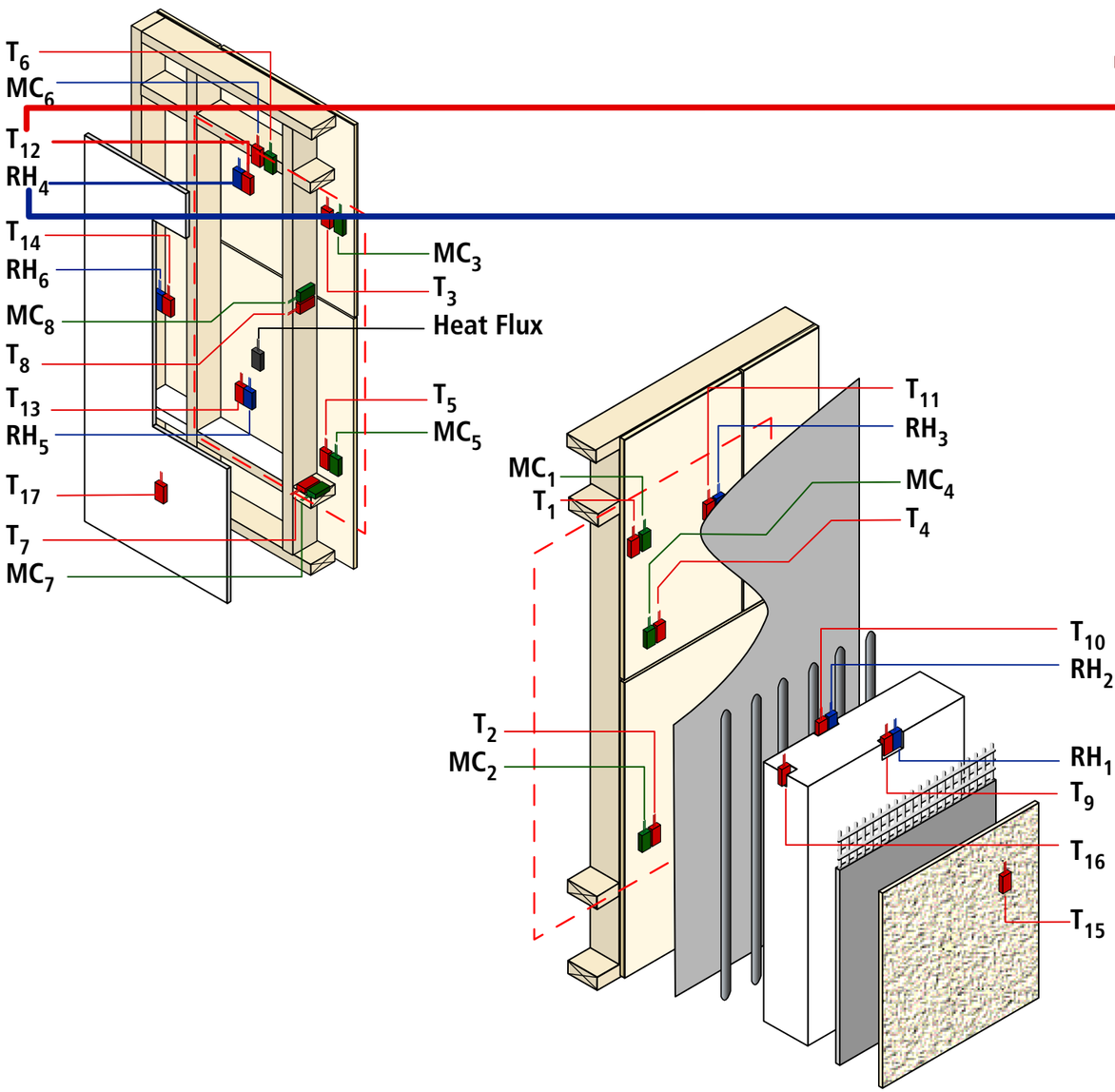
T_6
MC_6
T_{12}
RH_4
T_{14}
RH_6
MC_8
T_8
T_{13}
RH_5
T_{17}
T_7
MC_7
MC_3
T_3
Heat Flux
T_5
MC_5
T_{11}
RH_3
MC_1
T_1
MC_4
T_4
T_{10}
RH_2
T_2
MC_2
RH_1
T_9
T_{16}
T_{15}

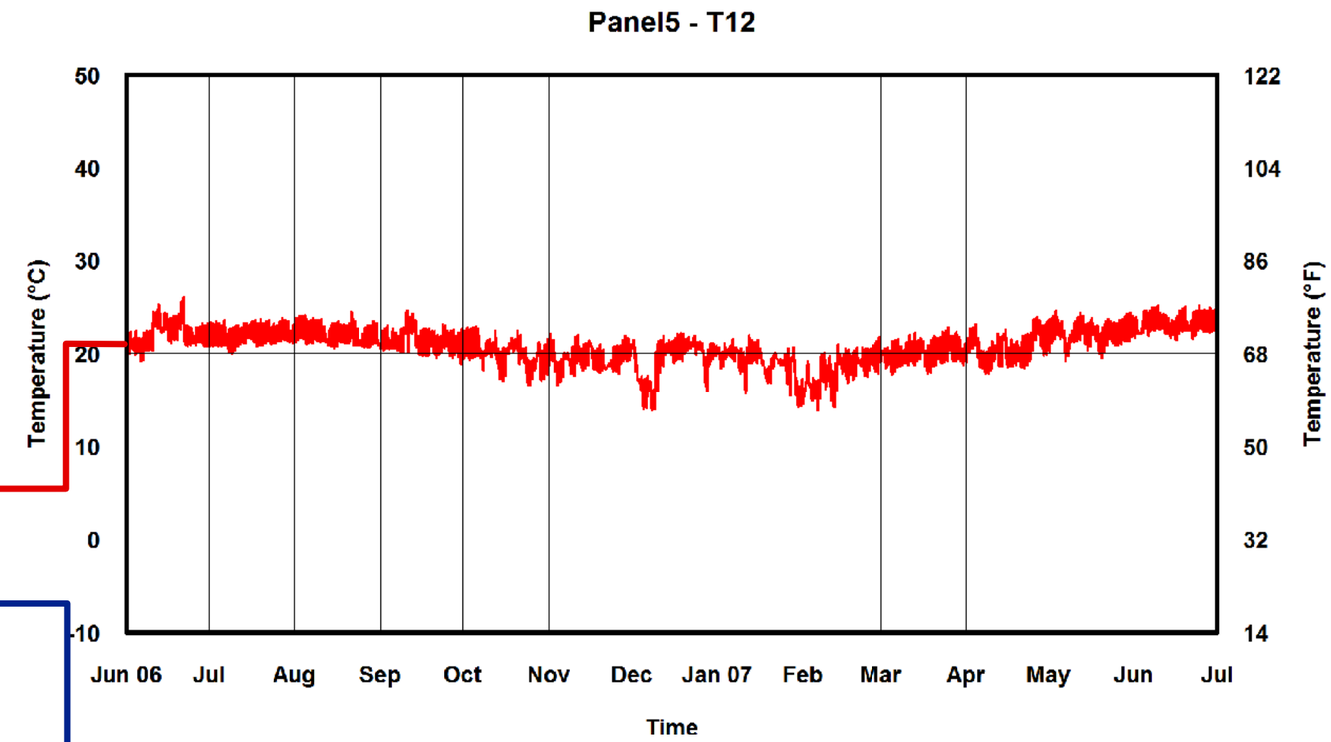
Panel5 - T12
Temperature (°C)
50
40
30
20
10
0
-10
Temperature (°F)
122
104
86
68
50
32
14
Jun 06
Jul
Aug
Sep
Oct
Nov
Dec
Jan 07
Feb
Mar
Apr
May
Jun
Jul
Time

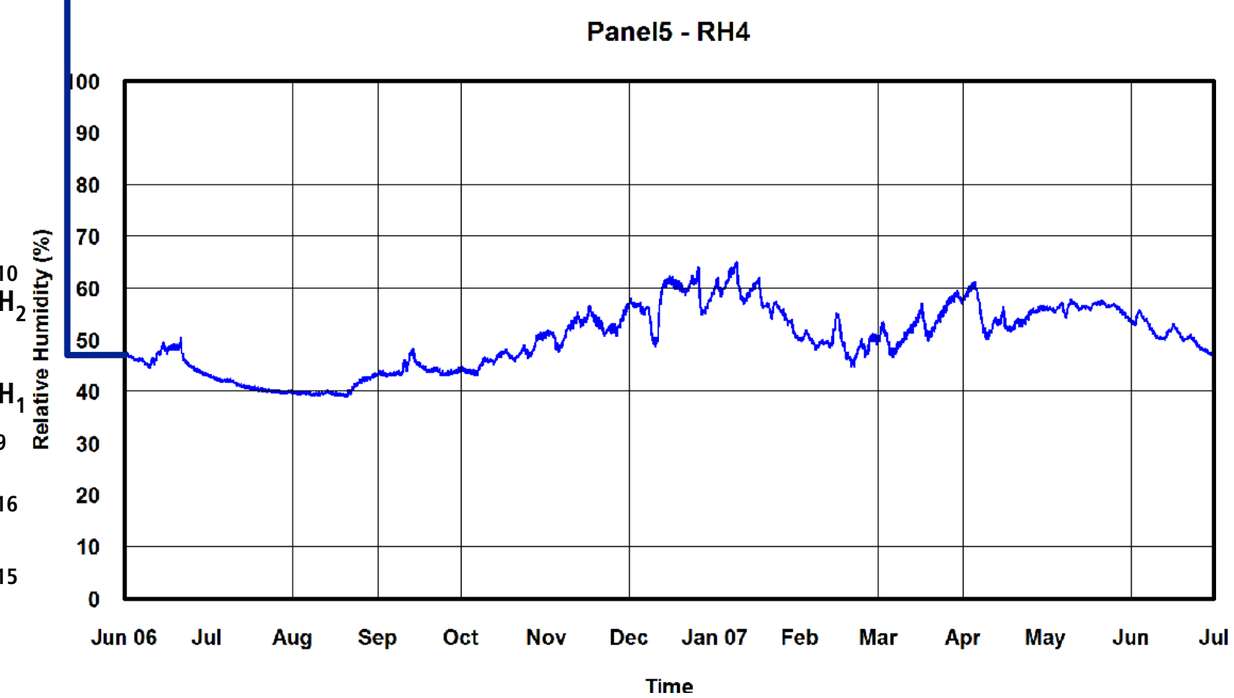
Panel5 - RH4
Relative Humidity (%)
100
90
80
70
60
50
40
30
20
10
0
Jun 06
Jul
Aug
Sep
Oct
Nov
Dec
Jan 07
Feb
Mar
Apr
May
Jun
Jul
Time

Panel 5

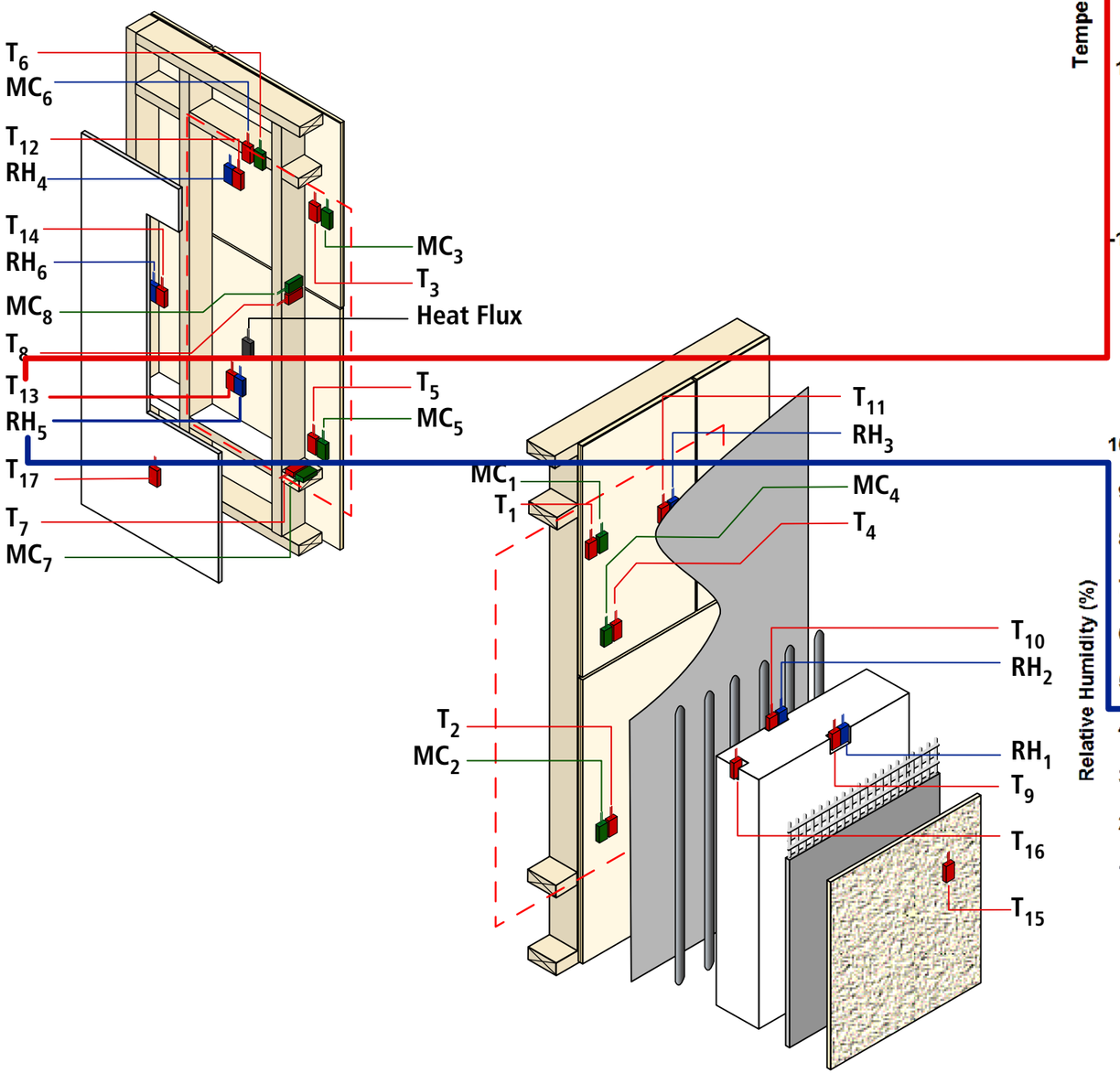
T_6
MC_6
T_{12}
RH_4
T_{14}
RH_6
MC_8
T_8
T_{13}
RH_5
T_{17}
T_7
MC_7
MC_3
T_3
Heat Flux
T_5
MC_5
MC_1
T_1
T_2
MC_2
T_{11}
RH_3
MC_4
T_4
T_{10}
RH_2
RH_1
T_9
T_{16}
T_{15}

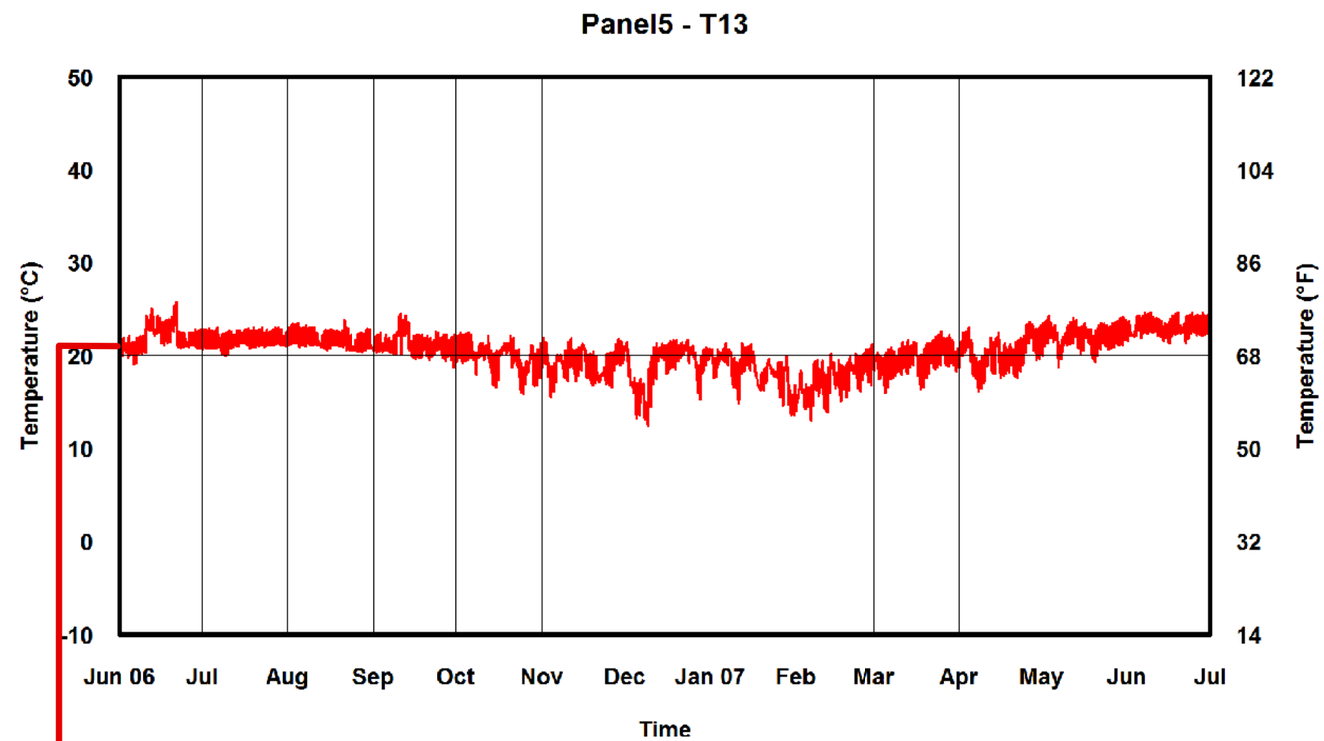
Panel5 - T13
Temperature (°C)
50
40
30
20
10
0
-10
Temperature (°F)
122
104
86
68
50
32
14
Jun 06
Jul
Aug
Sep
Oct
Nov
Dec
Jan 07
Feb
Mar
Apr
May
Jun
Jul
Time

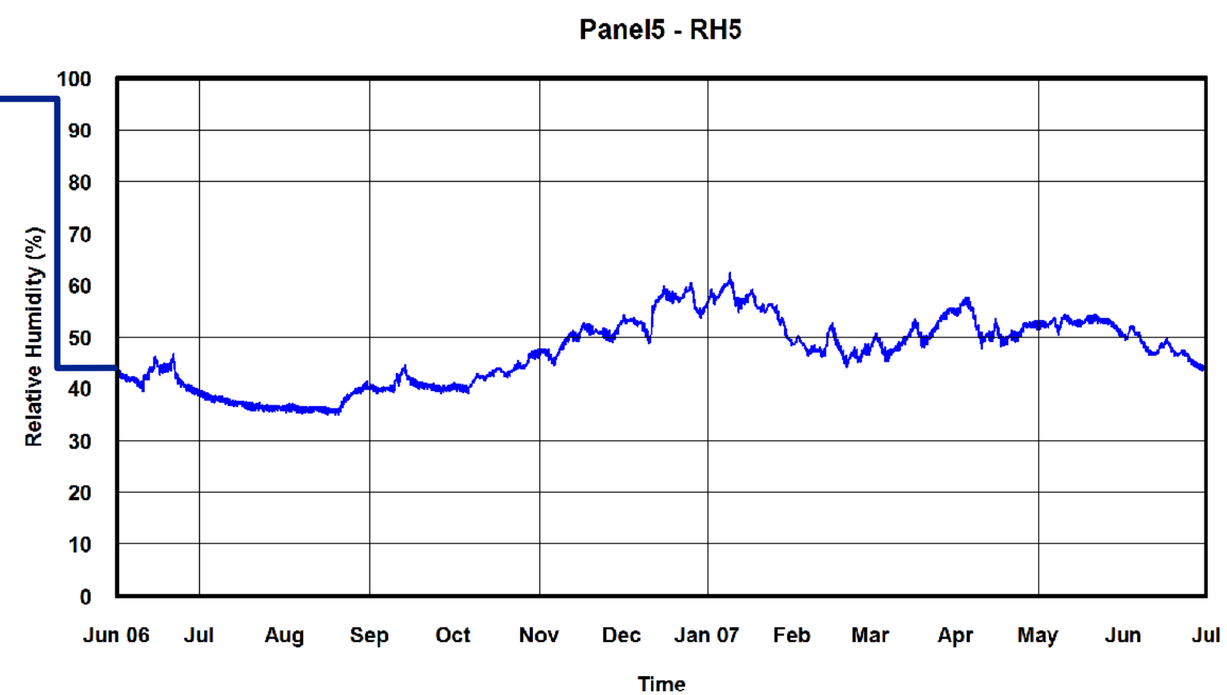
Panel5 - RH5
Relative Humidity (%)
100
90
80
70
60
50
40
30
20
10
0
Jun 06
Jul
Aug
Sep
Oct
Nov
Dec
Jan 07
Feb
Mar
Apr
May
Jun
Jul
Time

Panel 5

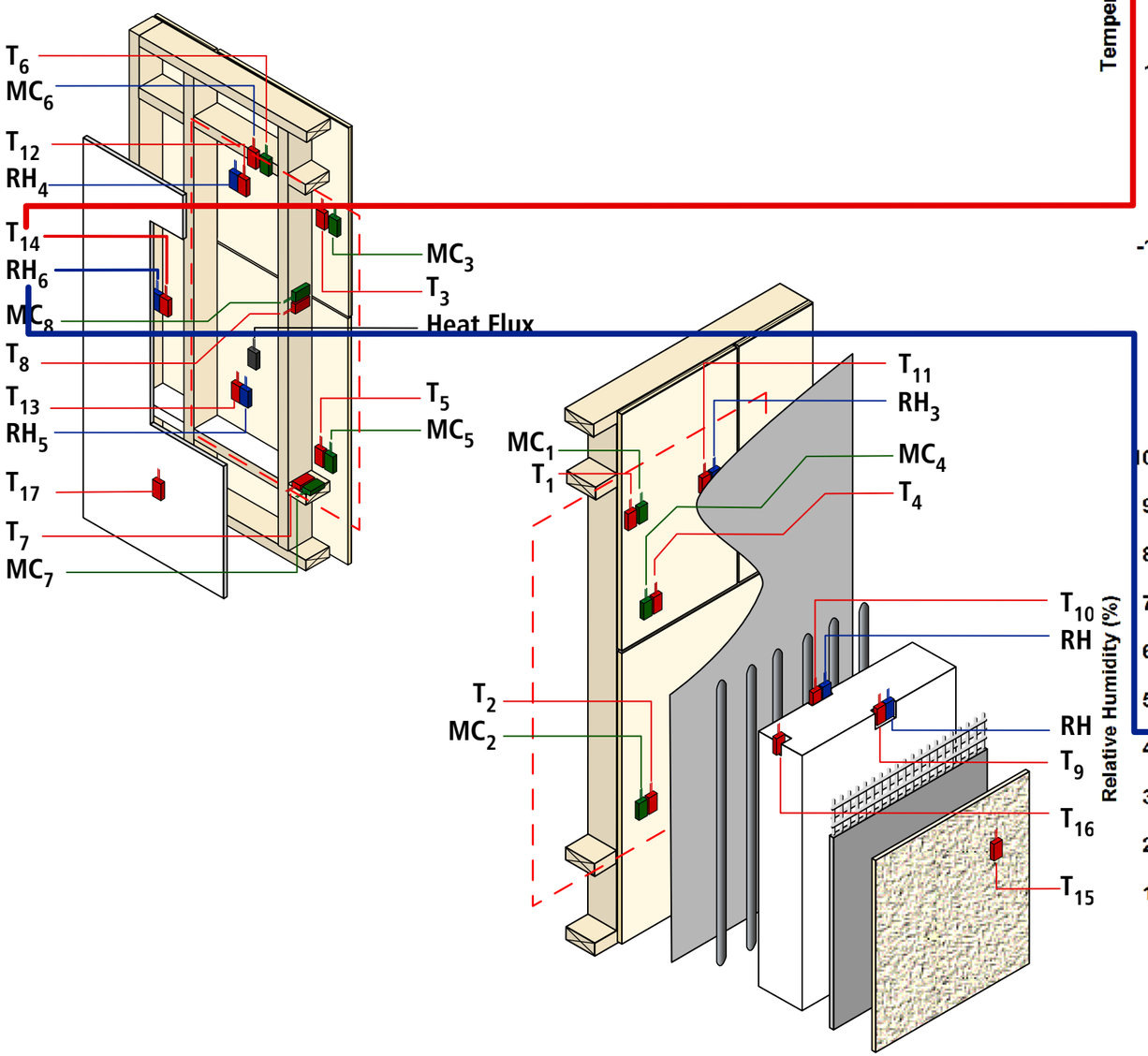
T_6
MC_6
T_{12}
RH_4
T_{14}
RH_6
MC_8
T_8
T_{13}
RH_5
T_{17}
T_7
MC_7
MC_3
T_3
Heat Flux
T_5
MC_5
MC_1
T_1
T_{11}
RH_3
MC_4
T_4
T_{10}
RH
RH
T_9
T_{16}
T_{15}
T_2
MC_2

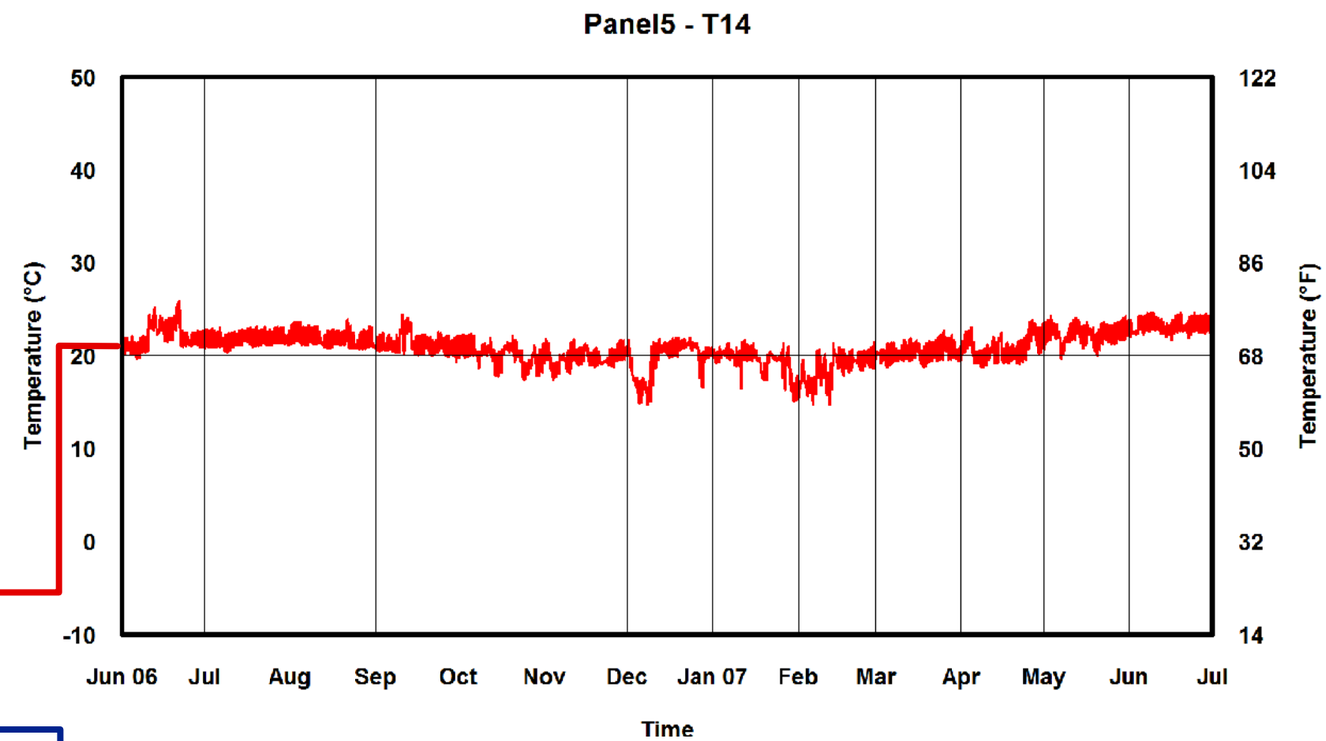
Panel5 - T14
Temperature (°C)
50
40
30
20
10
0
-10
Temperature (°F)
122
104
86
68
50
32
14
Jun 06
Jul
Aug
Sep
Oct
Nov
Dec
Jan 07
Feb
Mar
Apr
May
Jun
Jul
Time

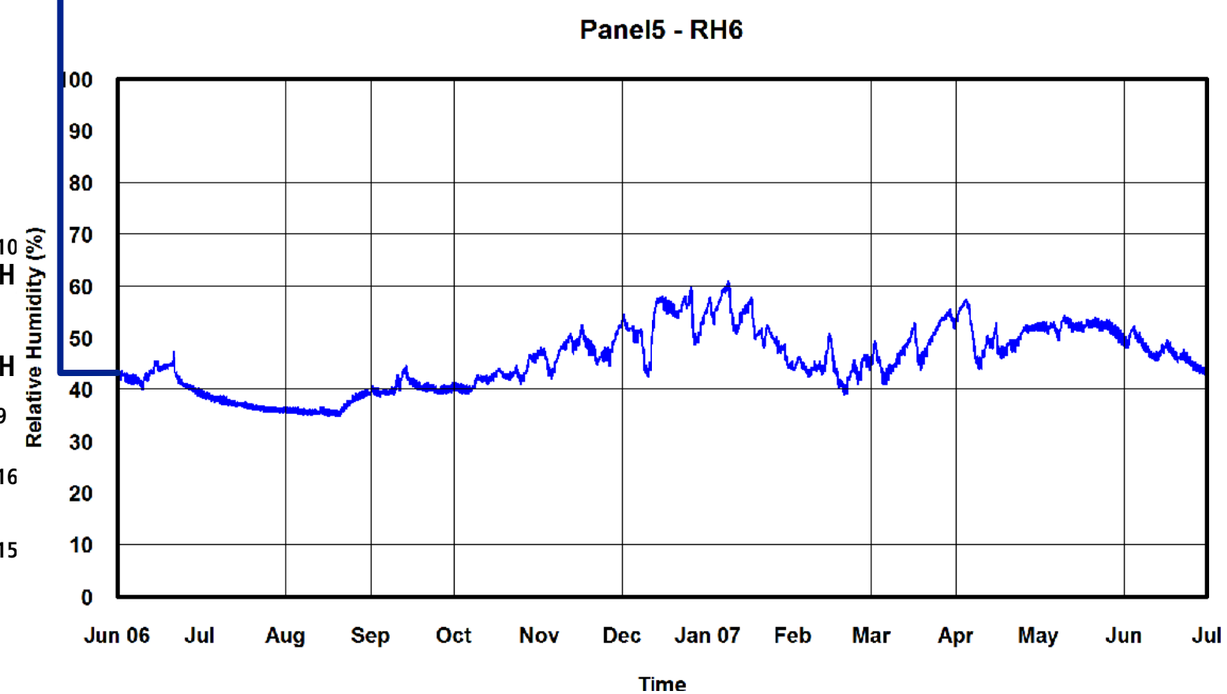
Panel5 - RH6
Relative Humidity (%)
100
90
80
70
60
50
40
30
20
10
0
Jun 06
Jul
Aug
Sep
Oct
Nov
Dec
Jan 07
Feb
Mar
Apr
May
Jun
Jul
Time

Panel 5

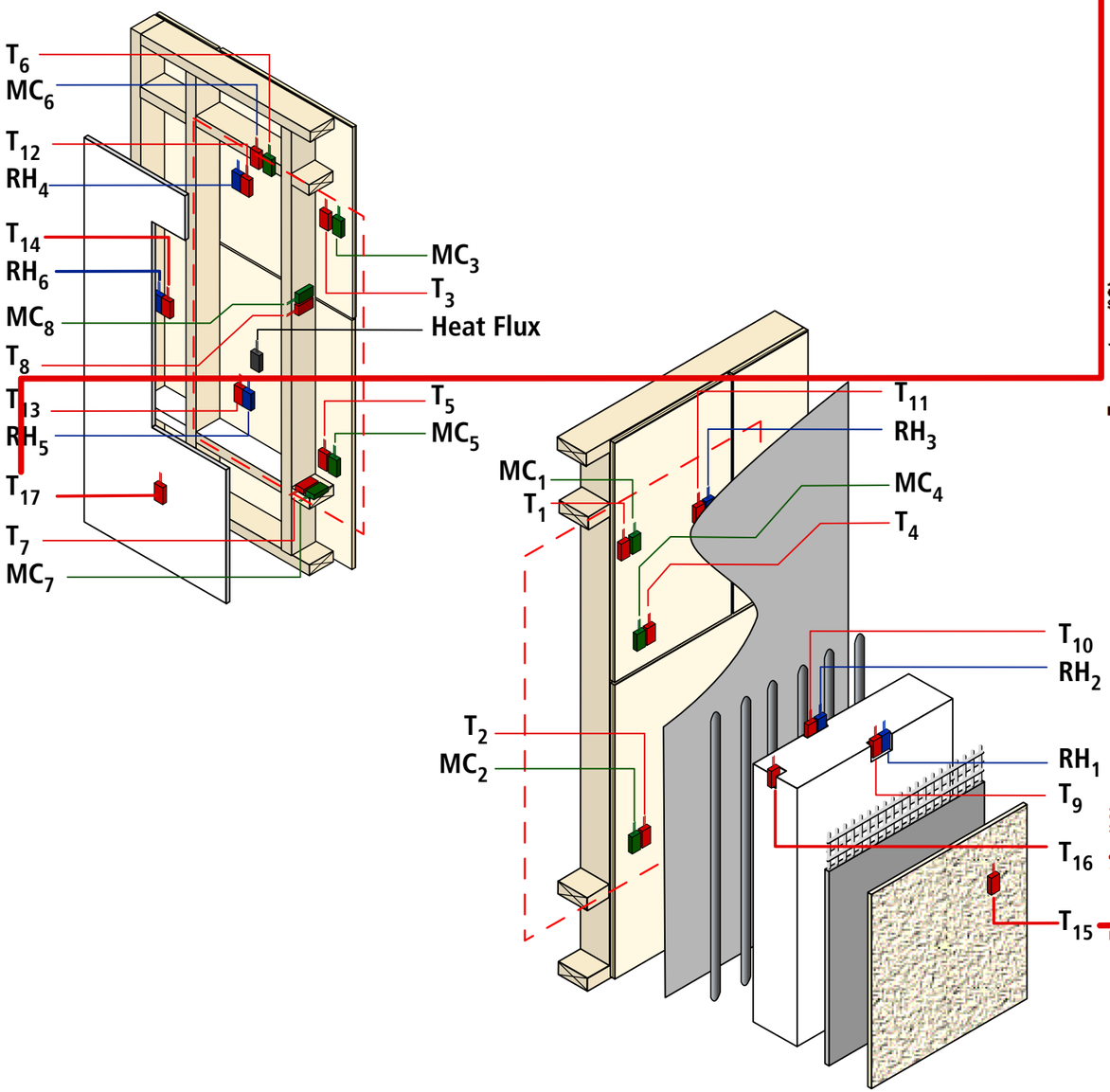
T_6
MC_6
T_{12}
RH_4
T_{14}
RH_6
MC_8
T_8
T_{13}
RH_5
T_{17}
T_7
MC_7
MC_3
T_3
Heat Flux
T_5
MC_5
MC_1
T_1
T_{11}
RH_3
MC_4
T_4
T_{10}
RH_2
T_2
MC_2
RH_1
T_9
T_{16}
T_{15}

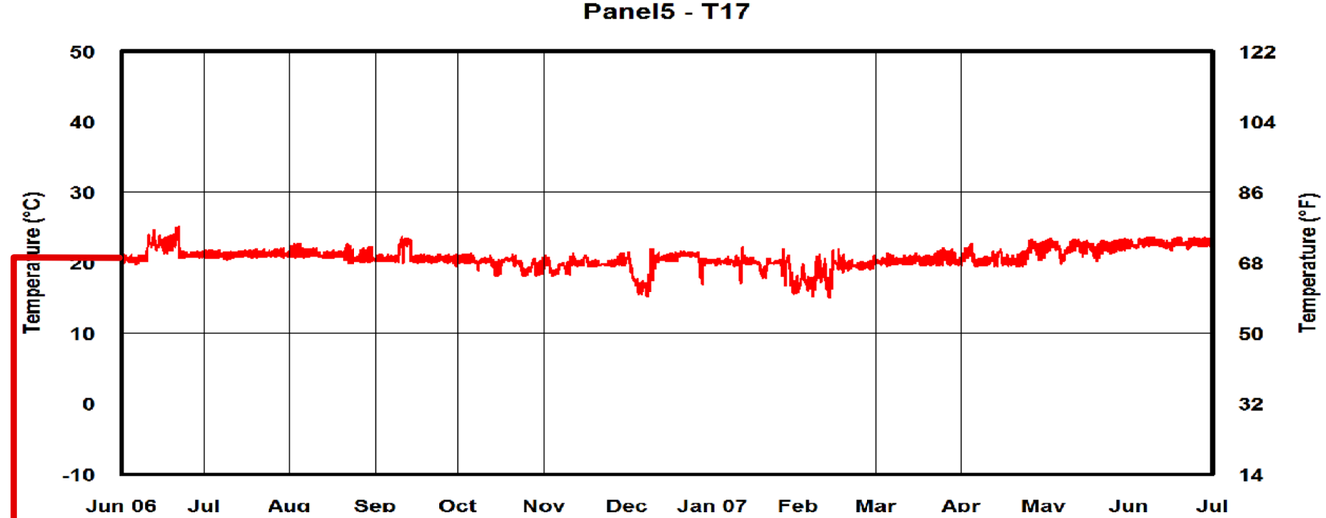
Panel5 - T17
Temperature (°C)
Temperature (°F)
50
40
30
20
10
0
-10
122
104
86
68
50
32
14
Jun 06
Jul
Aug
Sep
Oct
Nov
Dec
Jan 07
Feb
Mar
Apr
May
Jun
Jul

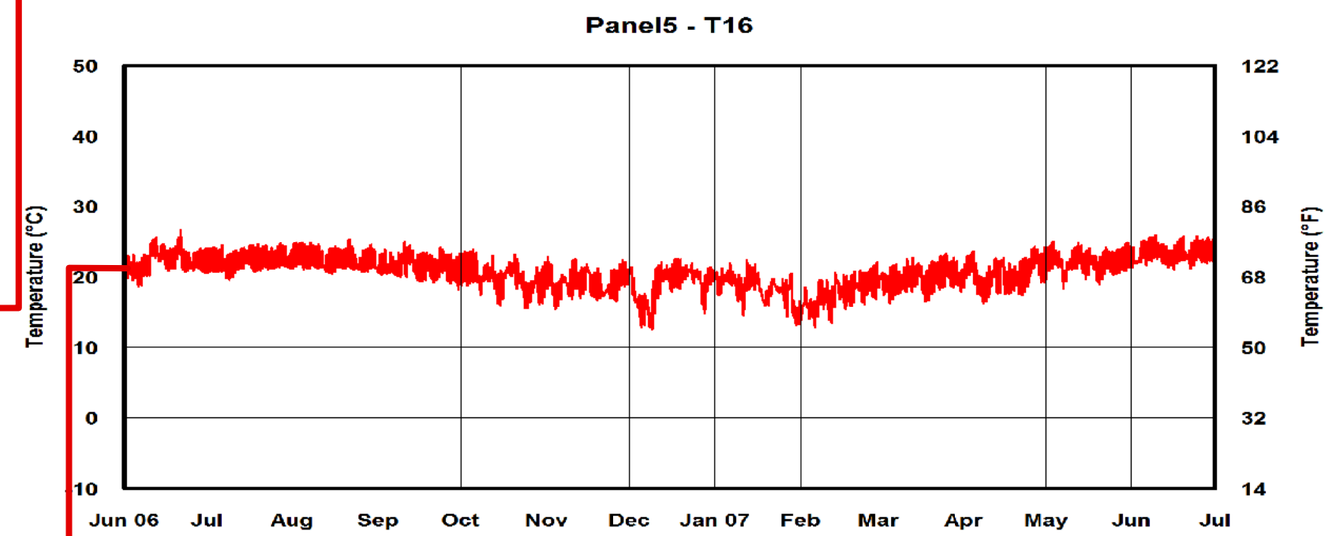
Panel5 - T16
Temperature (°C)
Temperature (°F)
50
40
30
20
10
0
-10
122
104
86
68
50
32
14
Jun 06
Jul
Aug
Sep
Oct
Nov
Dec
Jan 07
Feb
Mar
Apr
May
Jun
Jul

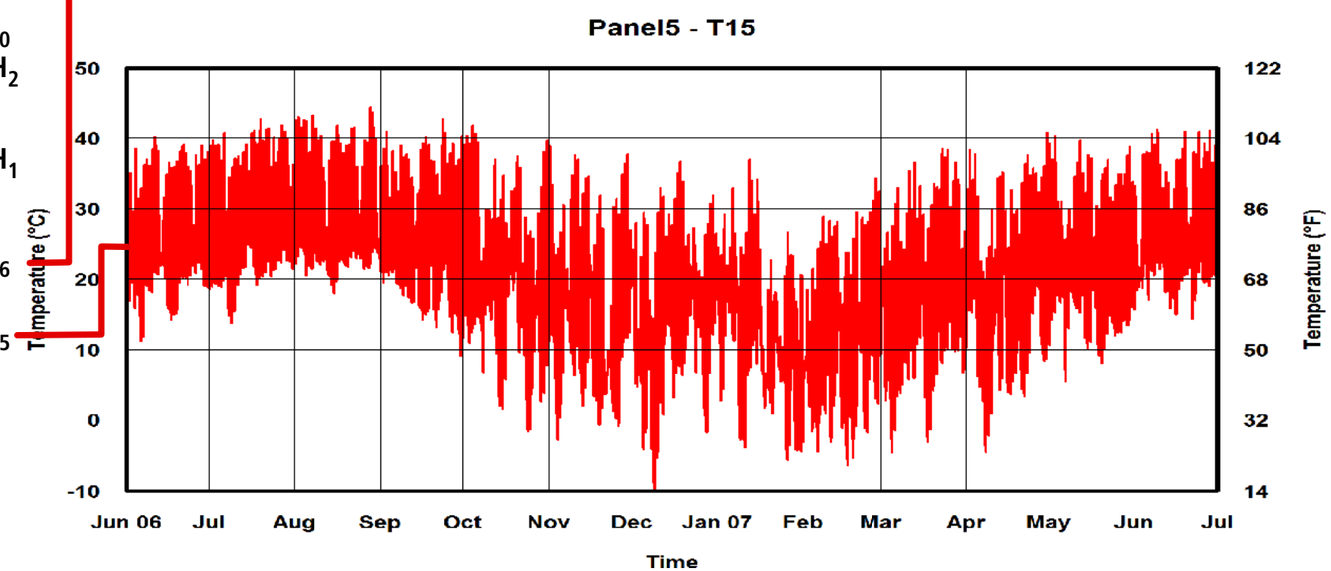
Panel5 - T15
Temperature (°C)
Temperature (°F)
50
40
30
20
10
0
-10
122
104
86
68
50
32
14
Jun 06
Jul
Aug
Sep
Oct
Nov
Dec
Jan 07
Feb
Mar
Apr
May
Jun
Jul
Time

Panel 5

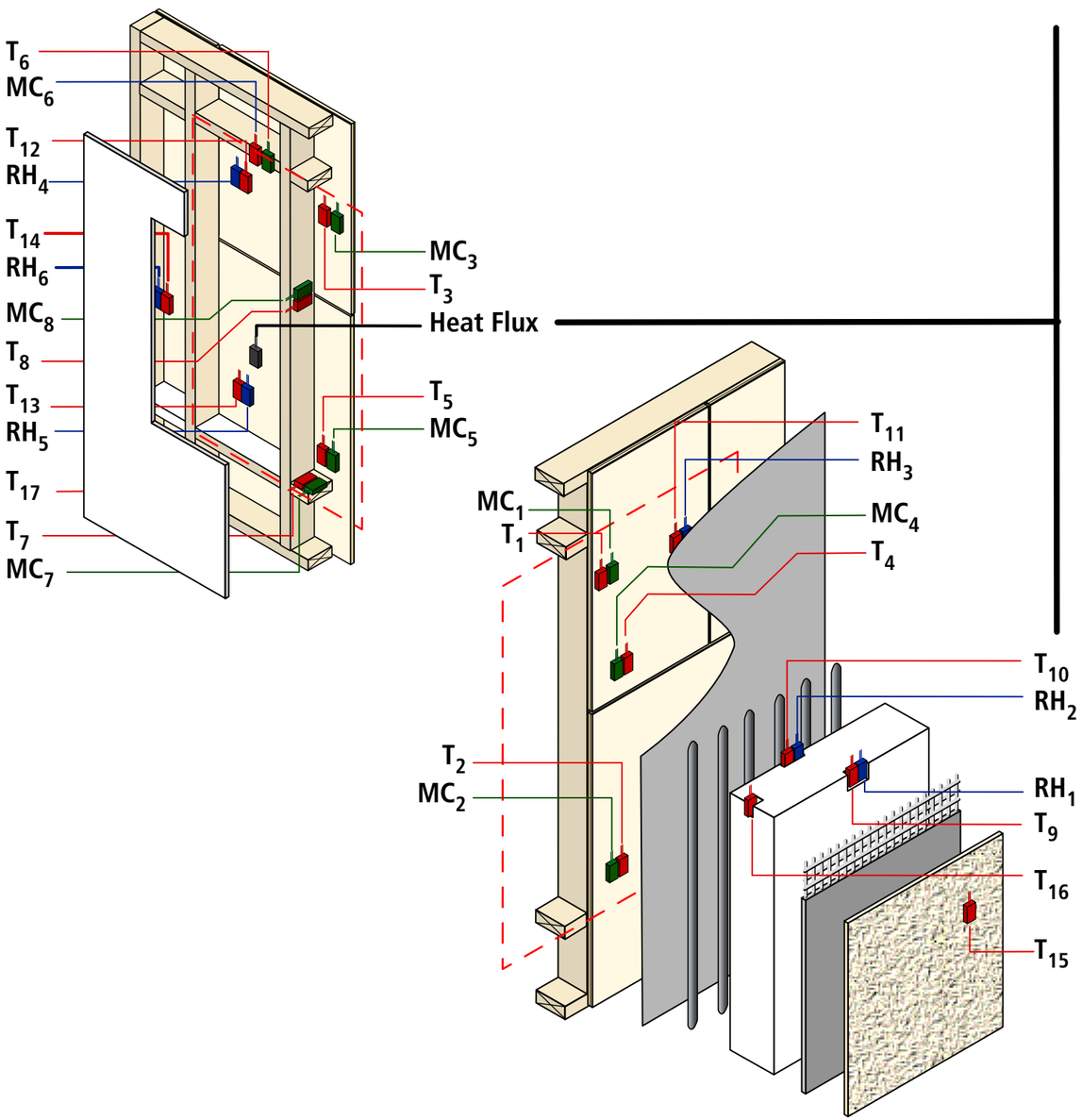
T_6
MC_6
T_{12}
RH_4
T_{14}
RH_6
MC_8
T_8
T_{13}
RH_5
T_{17}
T_7
MC_7
MC_3
T_3
Heat Flux
T_5
MC_5
T_{11}
RH_3
MC_1
T_1
MC_4
T_4
T_{10}
RH_2
T_2
MC_2
RH_1
T_9
T_{16}
T_{15}

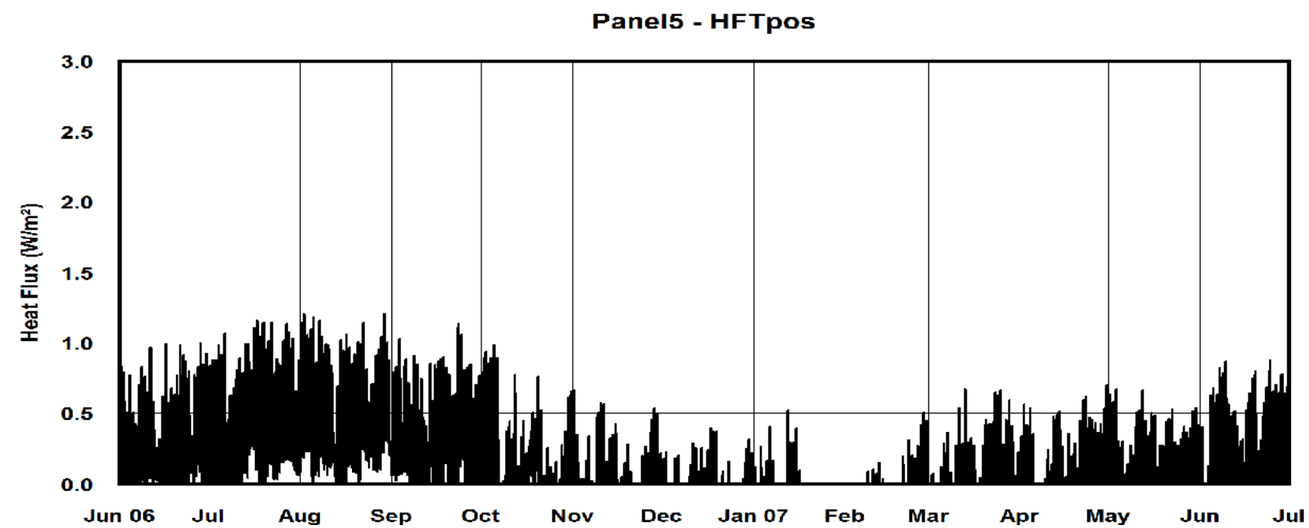
Panel5 - HFTpos
Heat Flux (W/m²)
3.0
2.5
2.0
1.5
1.0
0.5
0.0
Jun 06
Jul
Aug
Sep
Oct
Nov
Dec
Jan 07
Feb
Mar
Apr
May
Jun
Jul

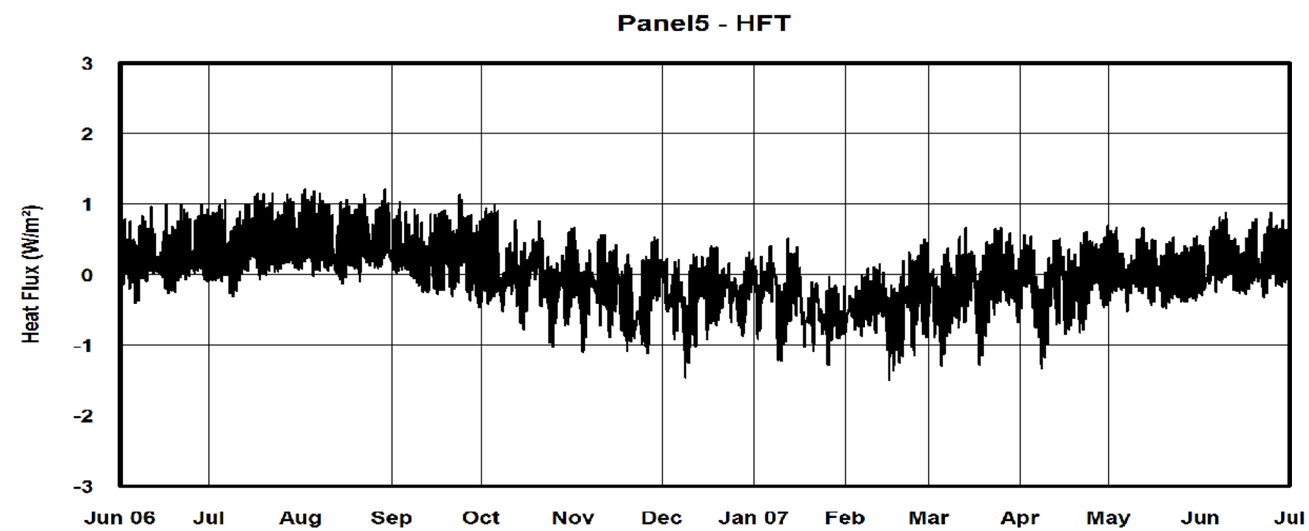
Panel5 - HFT
Heat Flux (W/m²)
3
2
1
0
-1
-2
-3
Jun 06
Jul
Aug
Sep
Oct
Nov
Dec
Jan 07
Feb
Mar
Apr
May
Jun
Jul

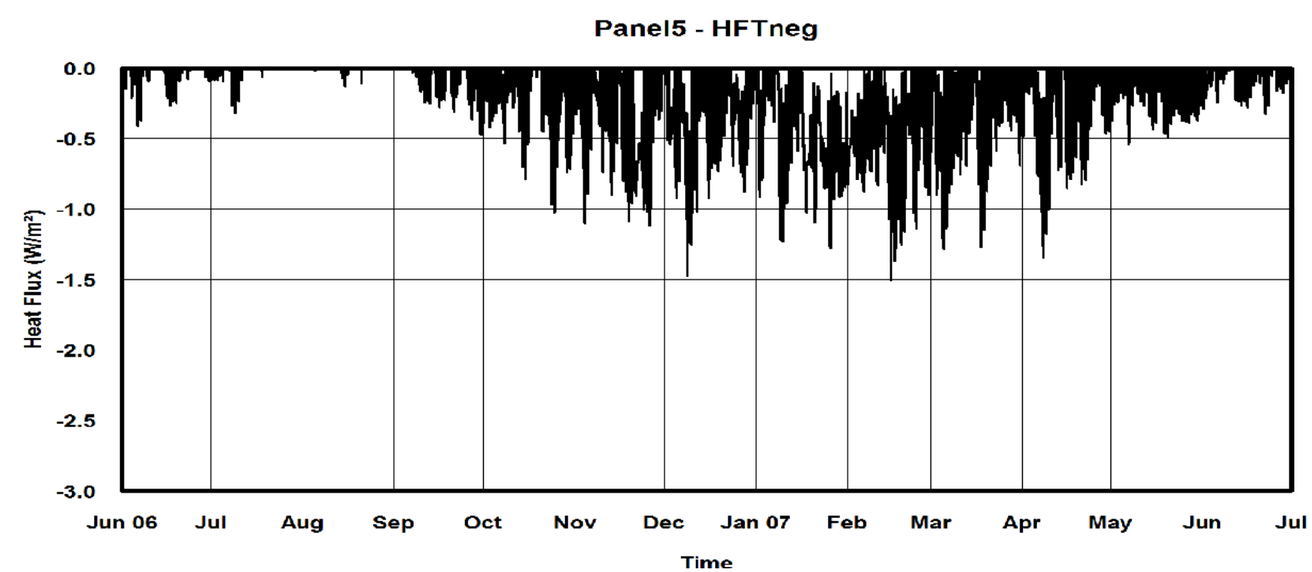
Panel5 - HFTneg
Heat Flux (W/m²)
0.0
-0.5
-1.0
-1.5
-2.0
-2.5
-3.0
Jun 06
Jul
Aug
Sep
Oct
Nov
Dec
Jan 07
Feb
Mar
Apr
May
Jun
Jul
Time

Panel 6

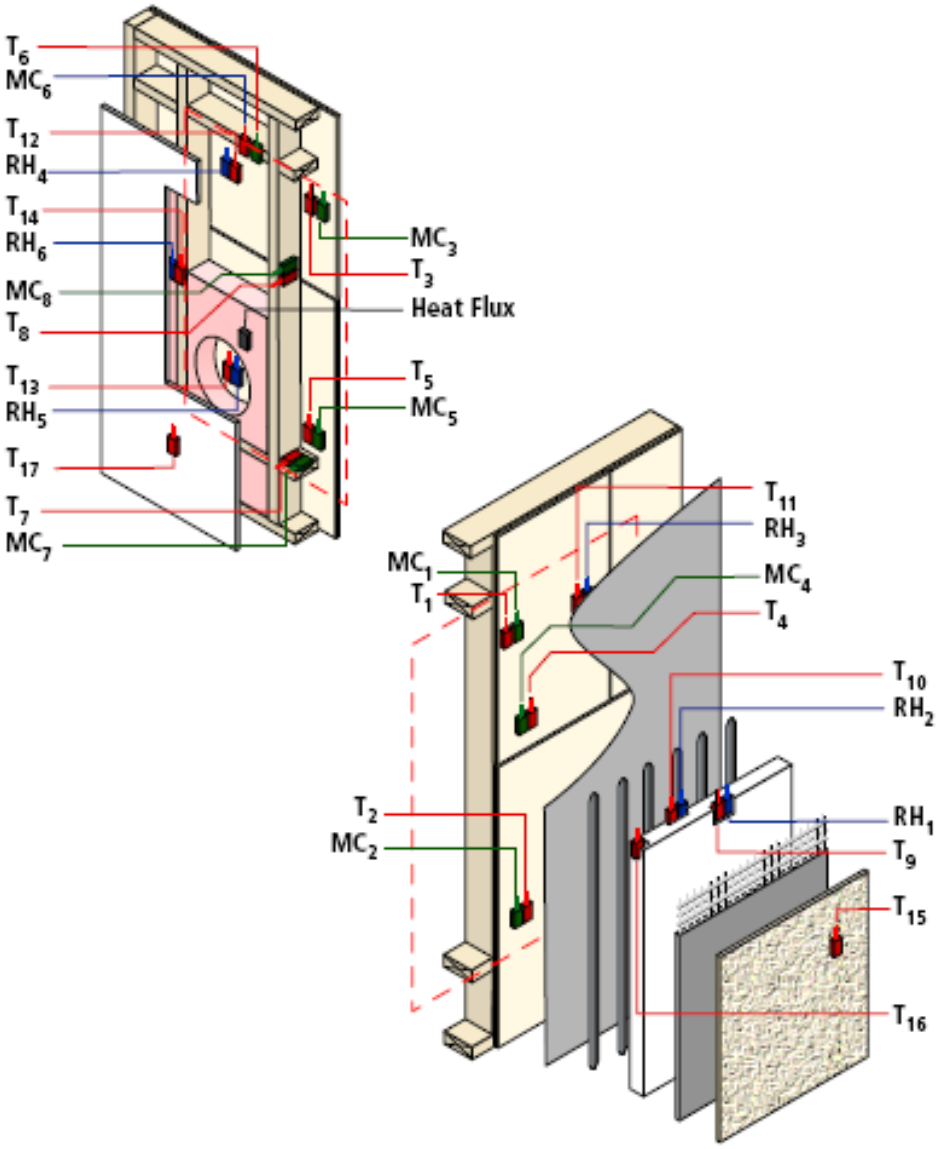
T_6
MC_6
T_{12}
RH_4
T_{14}
RH_6
MC_8
T_8
T_{13}
RH_5
T_{17}
T_7
MC_7
MC_3
T_3
Heat Flux
T_5
MC_5
T_{11}
RH_3
MC_1
T_1
MC_4
T_4
T_{10}
RH_2
T_2
MC_2
RH_1
T_9
T_{15}
T_{16}

Panel 6

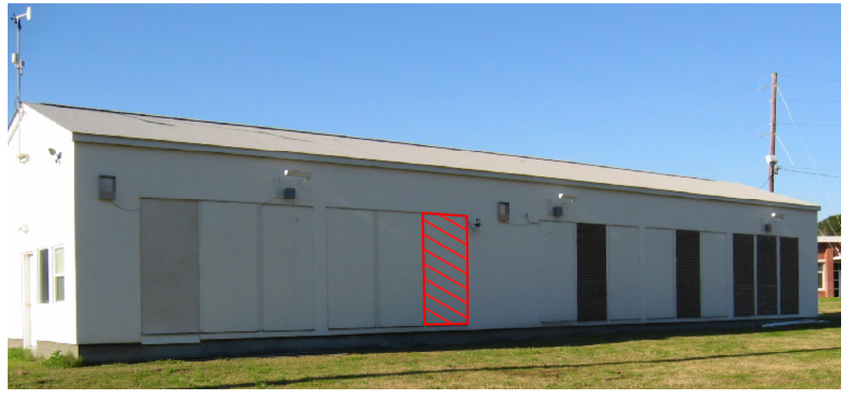

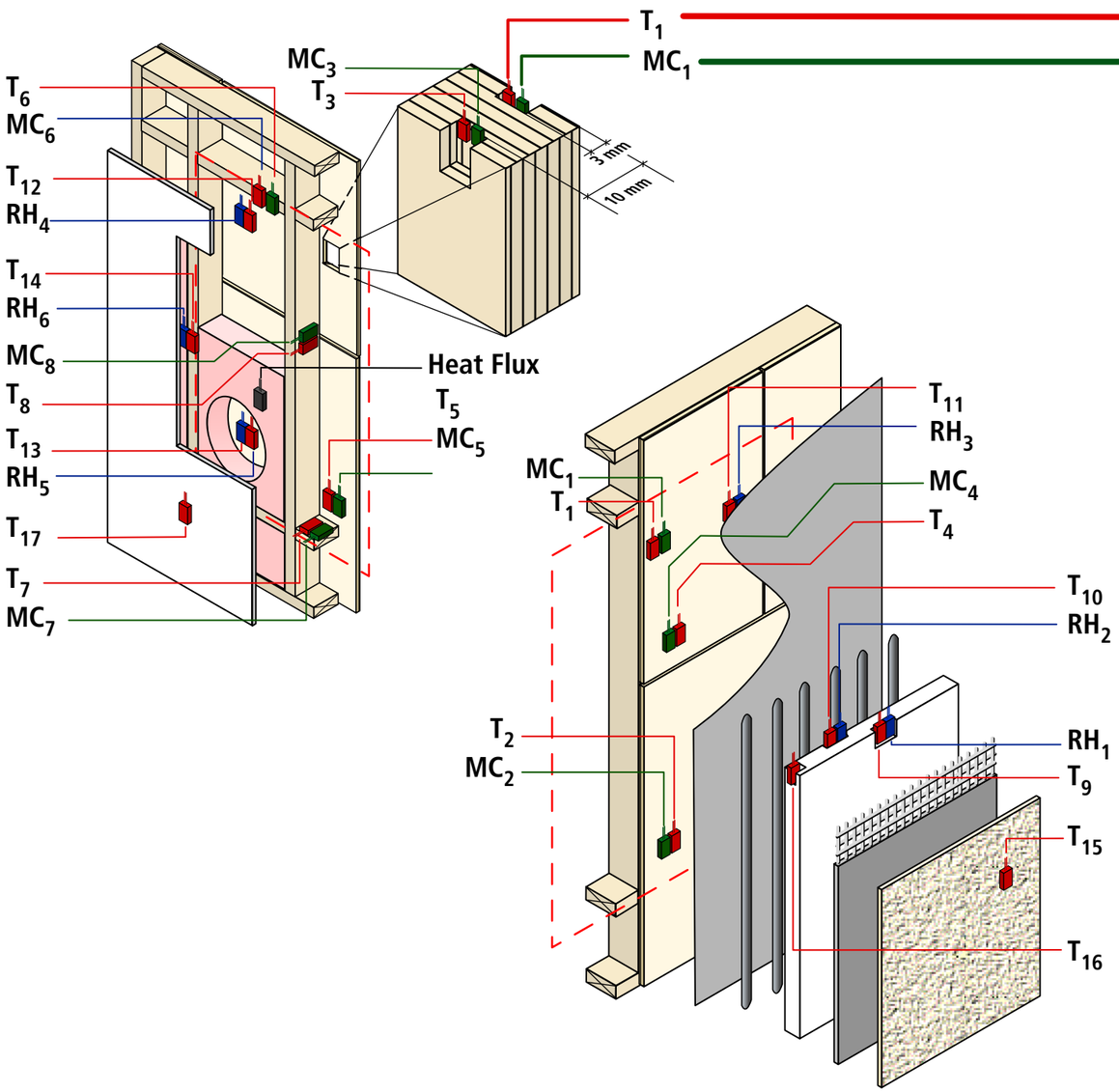
T_1
MC_1
MC_3
T_3
T_6
MC_6
T_{12}
RH_4
T_{14}
RH_6
MC_8
T_8
T_{13}
RH_5
T_{17}
T_7
MC_7
3 mm
10 mm
Heat Flux
T_5
MC_5
T_{11}
RH_3
MC_4
T_4
T_{10}
RH_2
RH_1
T_9
T_{15}
T_{16}
T_2
MC_2

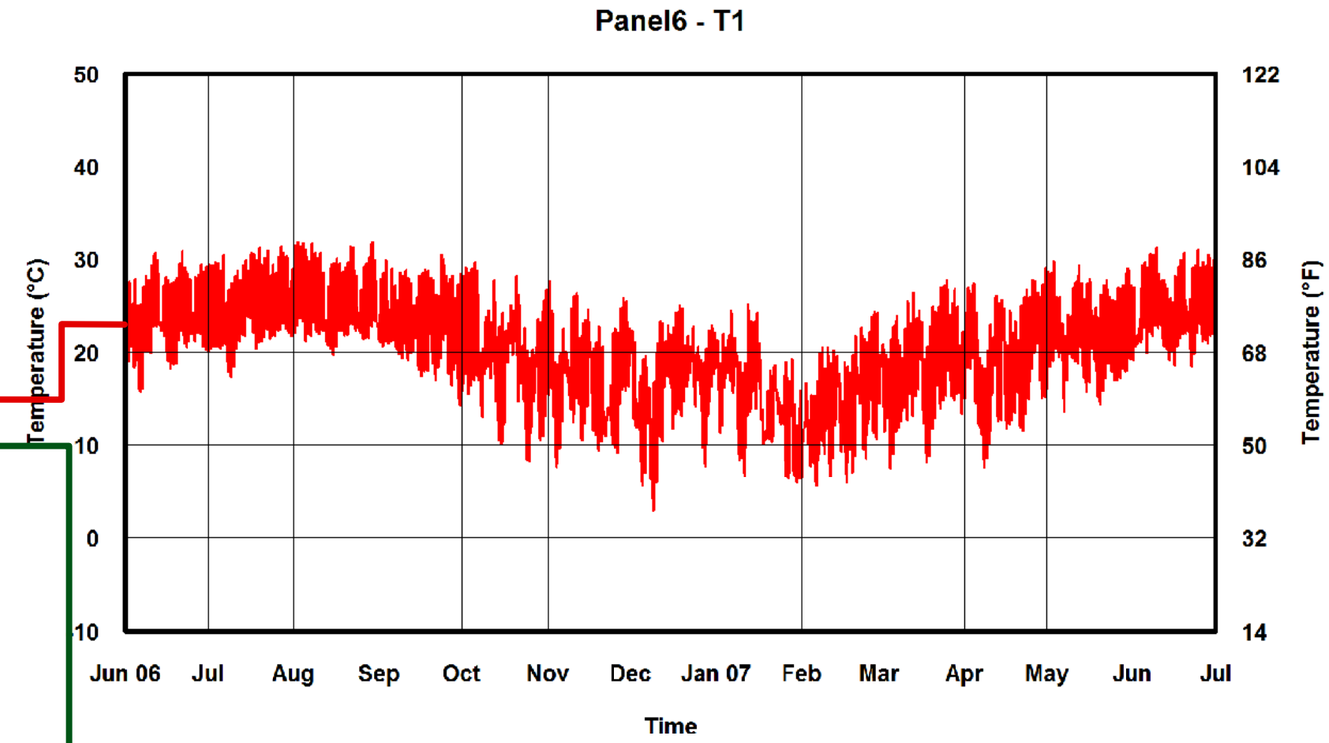
Panel6 - T1
Temperature (°C)
Temperature (°F)
50
40
30
20
10
0
-10
122
104
86
68
50
32
14
Jun 06
Jul
Aug
Sep
Oct
Nov
Dec
Jan 07
Feb
Mar
Apr
May
Jun
Jul
Time

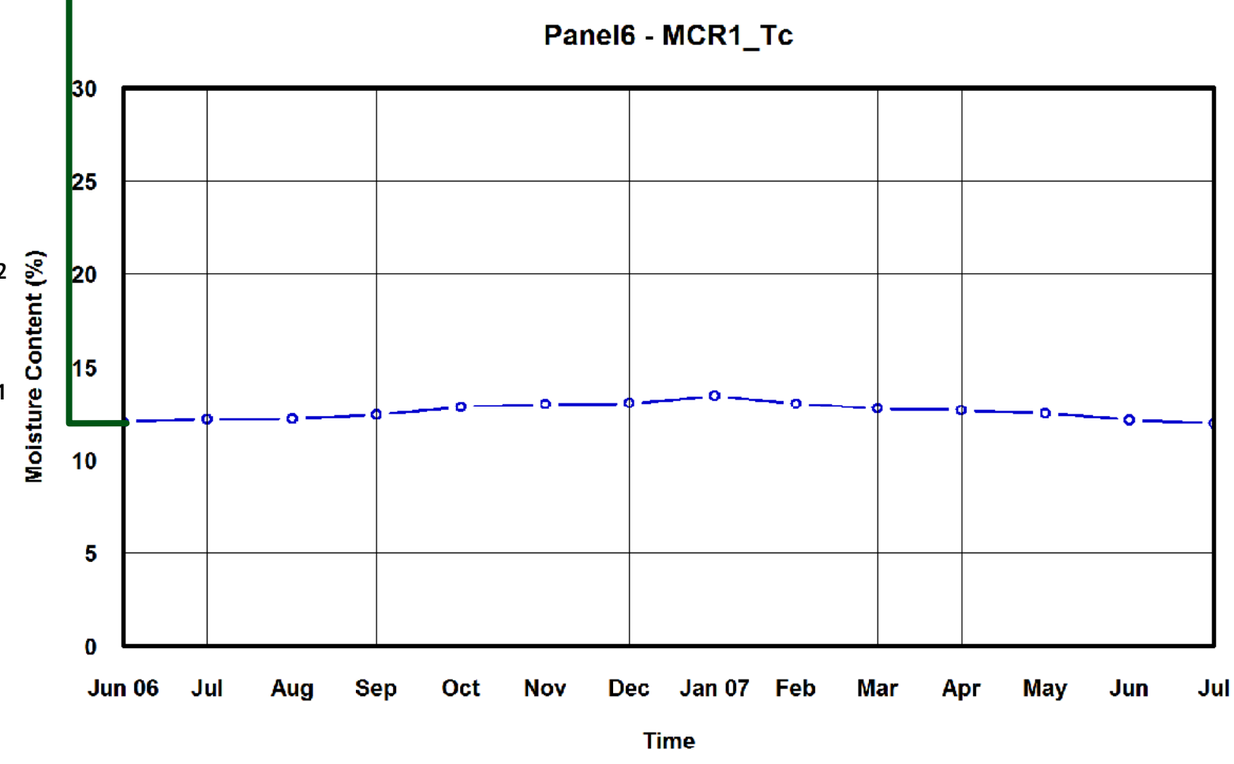
Panel6 - MCR1_Tc
Moisture Content (%)
30
25
20
15
10
5
0
Jun 06
Jul
Aug
Sep
Oct
Nov
Dec
Jan 07
Feb
Mar
Apr
May
Jun
Jul
Time

Panel 6

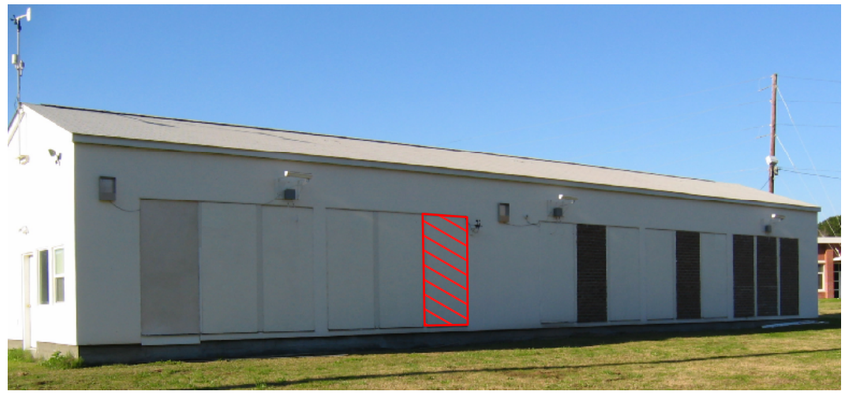

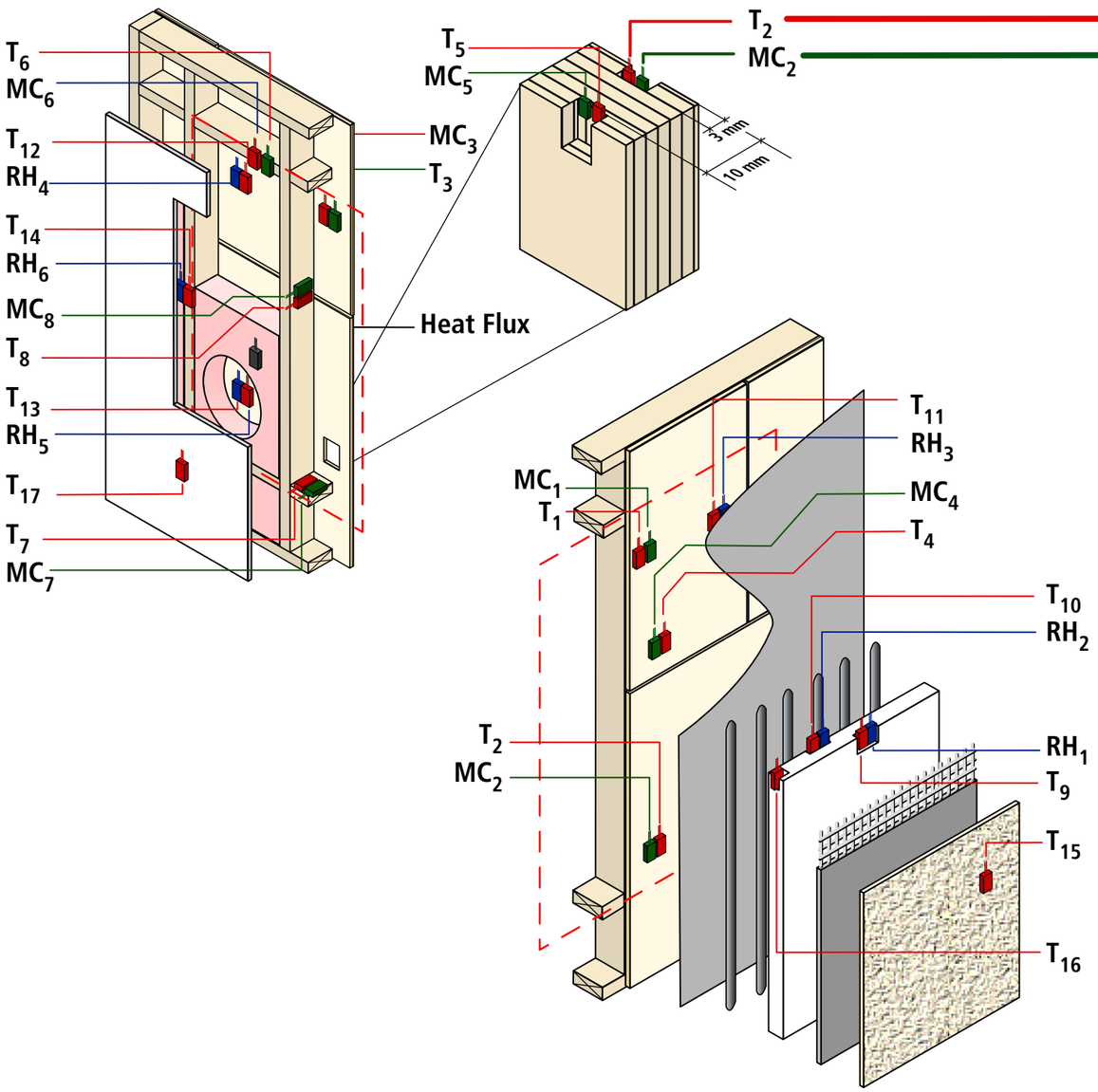
T_6
MC_6
T_{12}
RH_4
T_{14}
RH_6
MC_8
T_8
T_{13}
RH_5
T_{17}
T_7
MC_7
T_5
MC_5
T_2
MC_2
MC_3
T_3
3 mm
10 mm
Heat Flux
T_{11}
RH_3
MC_1
T_1
MC_4
T_4
T_{10}
RH_2
T_2
MC_2
RH_1
T_9
T_{15}
T_{16}

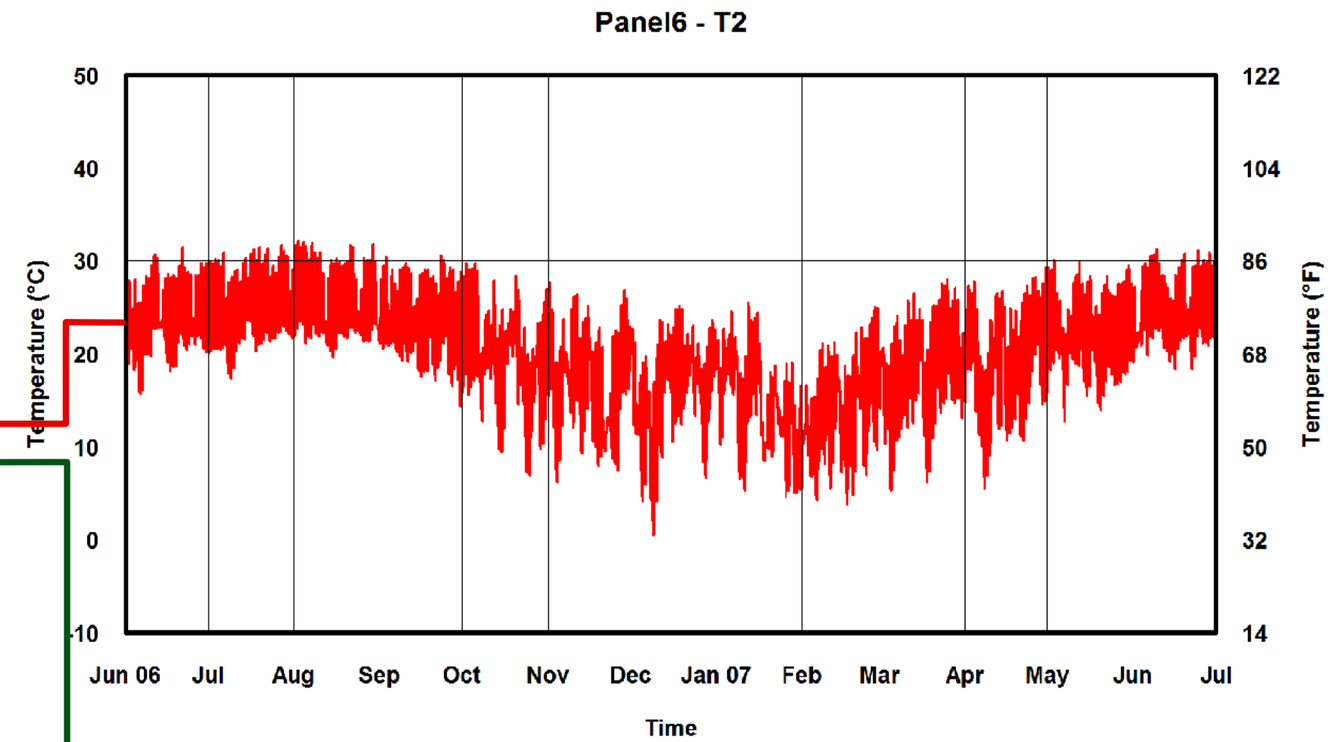
Panel6 - T2
Temperature (°C)
Temperature (°F)
50
40
30
20
10
0
-10
122
104
86
68
50
32
14
Jun 06
Jul
Aug
Sep
Oct
Nov
Dec
Jan 07
Feb
Mar
Apr
May
Jun
Jul
Time

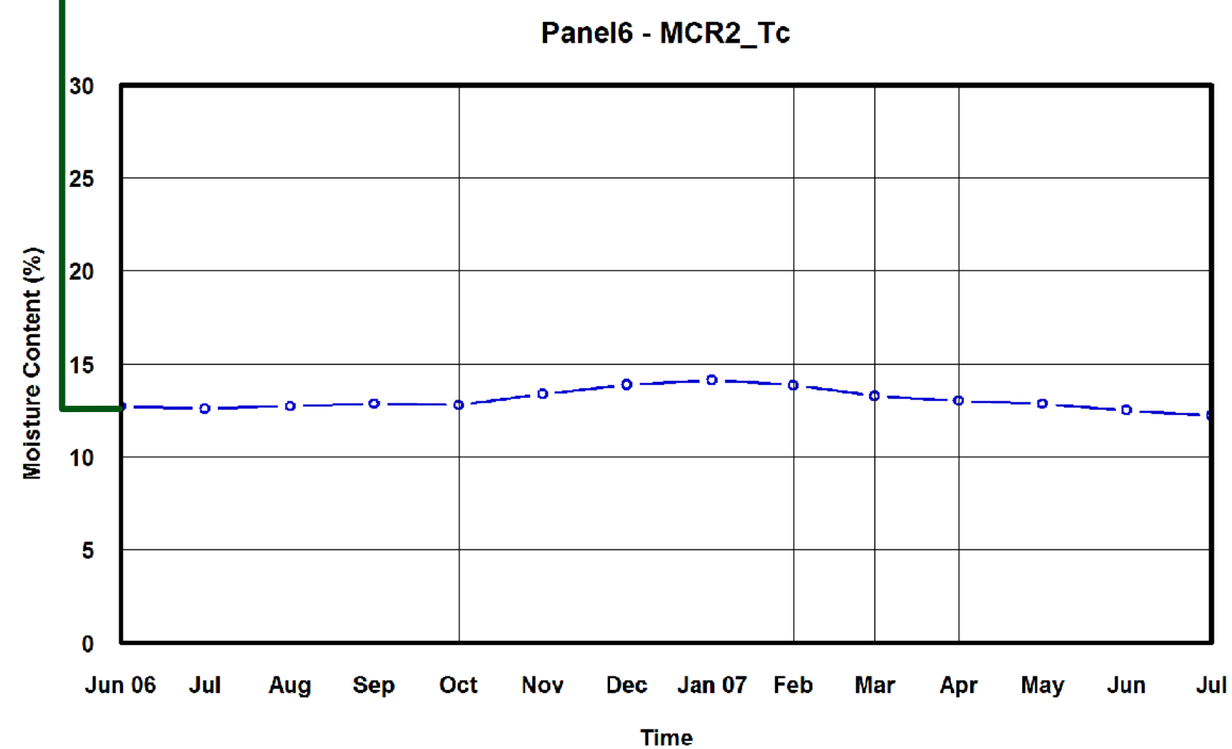
Panel6 - MCR2_Tc
Moisture Content (%)
30
25
20
15
10
5
0
Jun 06
Jul
Aug
Sep
Oct
Nov
Dec
Jan 07
Feb
Mar
Apr
May
Jun
Jul
Time

Panel 6

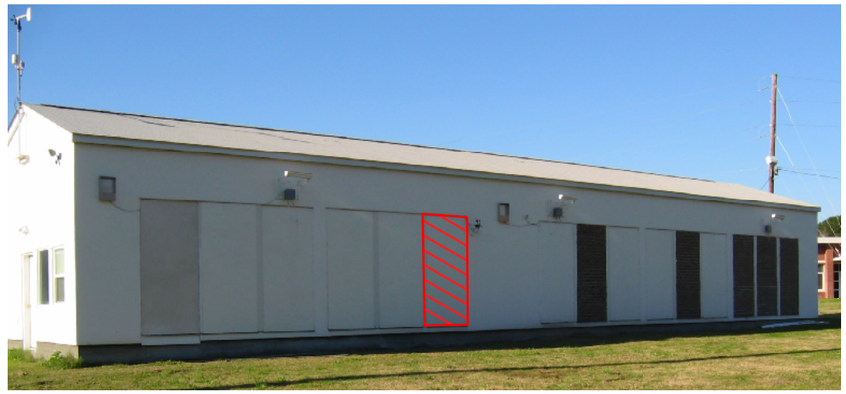

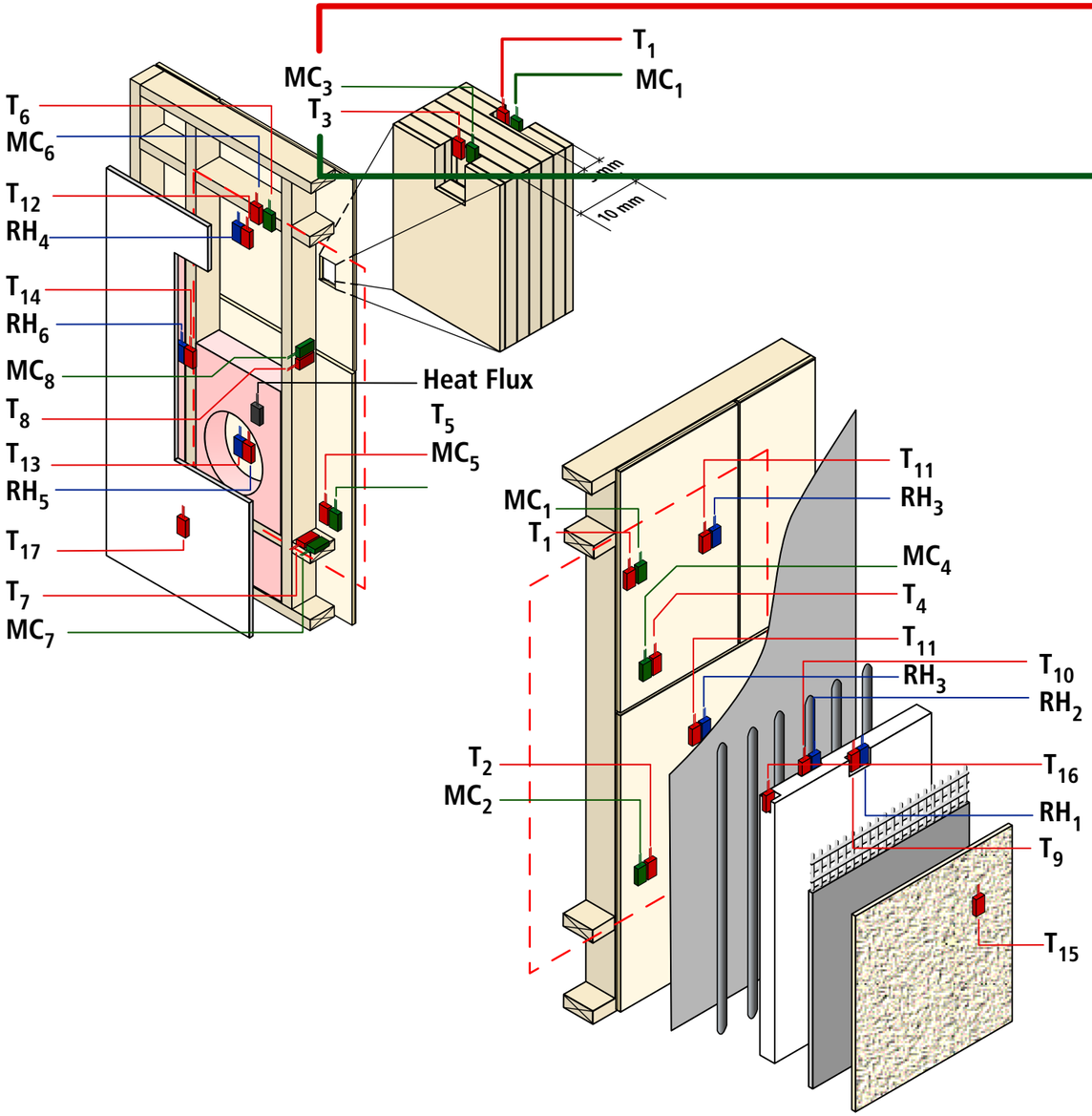
T_6
MC_6
T_{12}
RH_4
T_{14}
RH_6
MC_8
T_8
T_{13}
RH_5
T_{17}
T_7
MC_7
MC_3
T_3
T_1
MC_1
5 mm
10 mm
Heat Flux
T_5
MC_5
MC_1
T_1
T_{11}
RH_3
MC_4
T_4
T_{11}
RH_3
T_{10}
RH_2
T_2
MC_2
T_{16}
RH_1
T_9
T_{15}

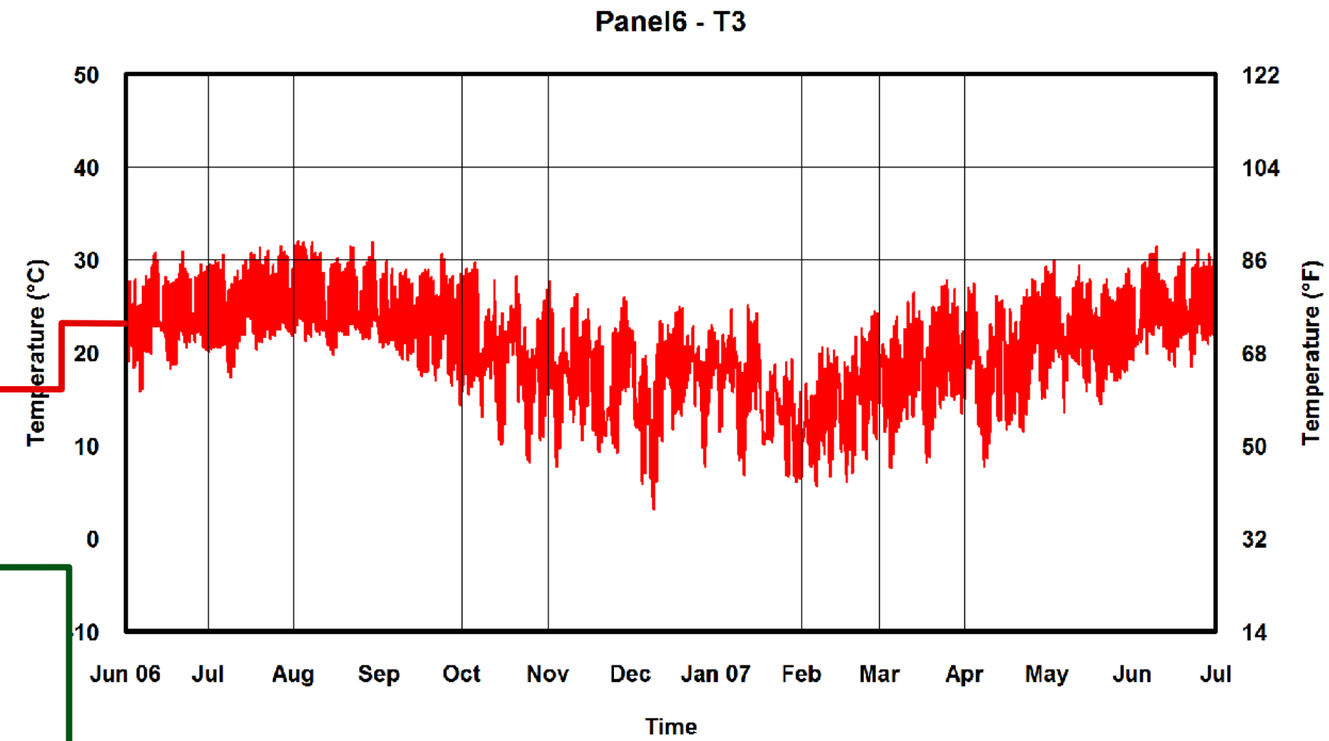
Panel6 - T3
Temperature (°C)
Temperature (°F)
50
40
30
20
10
0
-10
122
104
86
68
50
32
14
Jun 06
Jul
Aug
Sep
Oct
Nov
Dec
Jan 07
Feb
Mar
Apr
May
Jun
Jul
Time

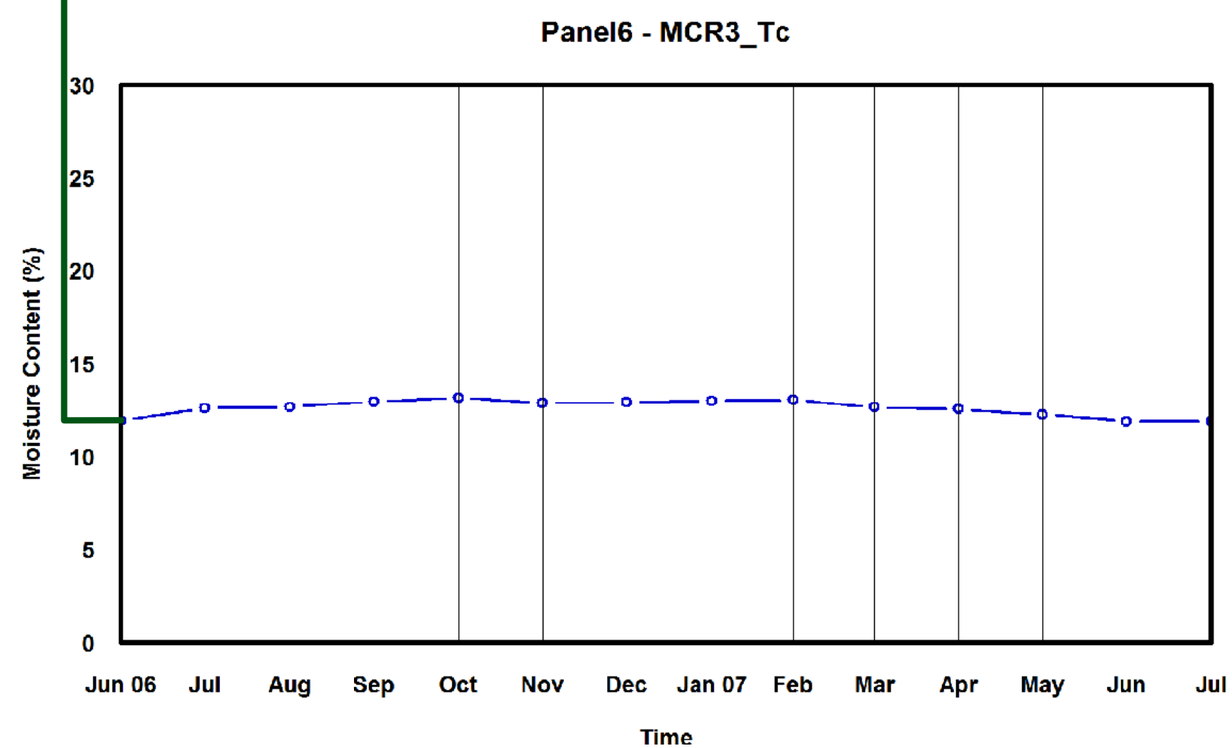
Panel6 - MCR3_Tc
Moisture Content (%)
30
25
20
15
10
5
0
Jun 06
Jul
Aug
Sep
Oct
Nov
Dec
Jan 07
Feb
Mar
Apr
May
Jun
Jul
Time

Panel 6

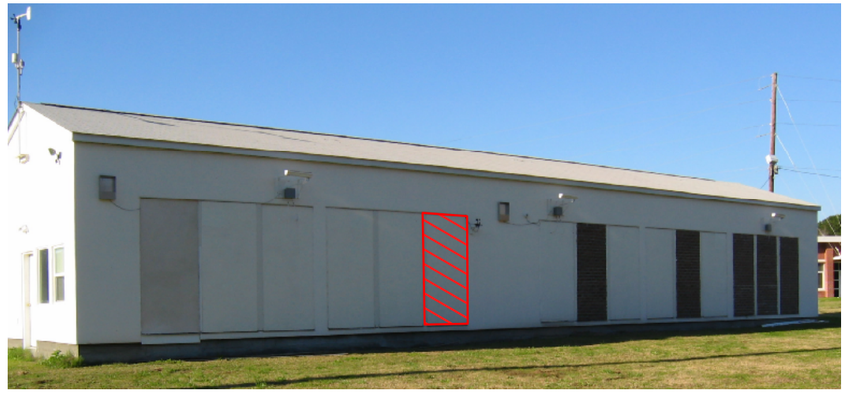

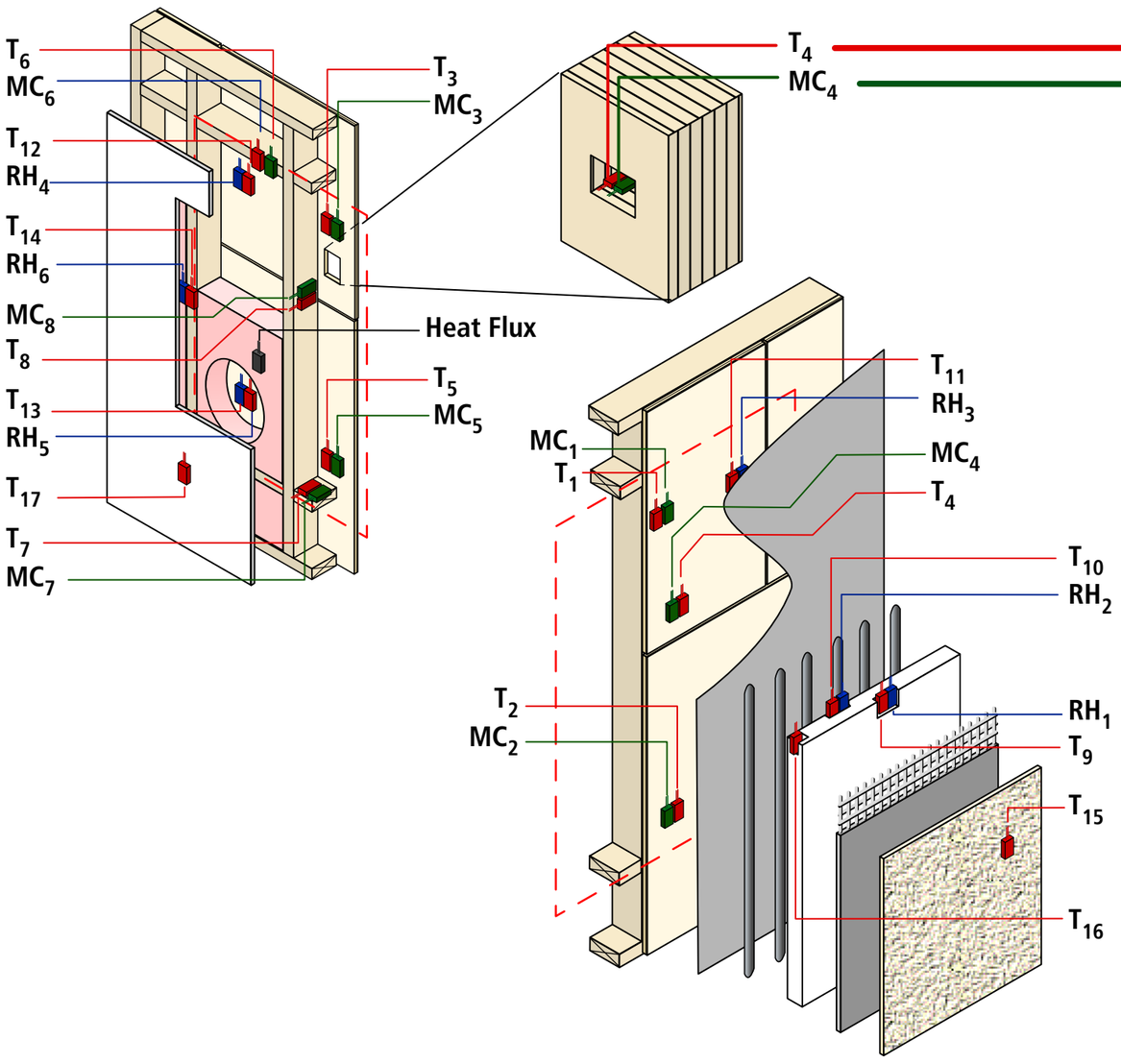
T_6
MC_6
T_{12}
RH_4
T_{14}
RH_6
MC_8
T_8
T_{13}
RH_5
T_{17}
T_7
MC_7
T_3
MC_3
Heat Flux
T_5
MC_5
T_4
MC_4
T_{11}
RH_3
MC_1
T_1
MC_4
T_4
T_{10}
RH_2
T_2
MC_2
RH_1
T_9
T_{15}
T_{16}

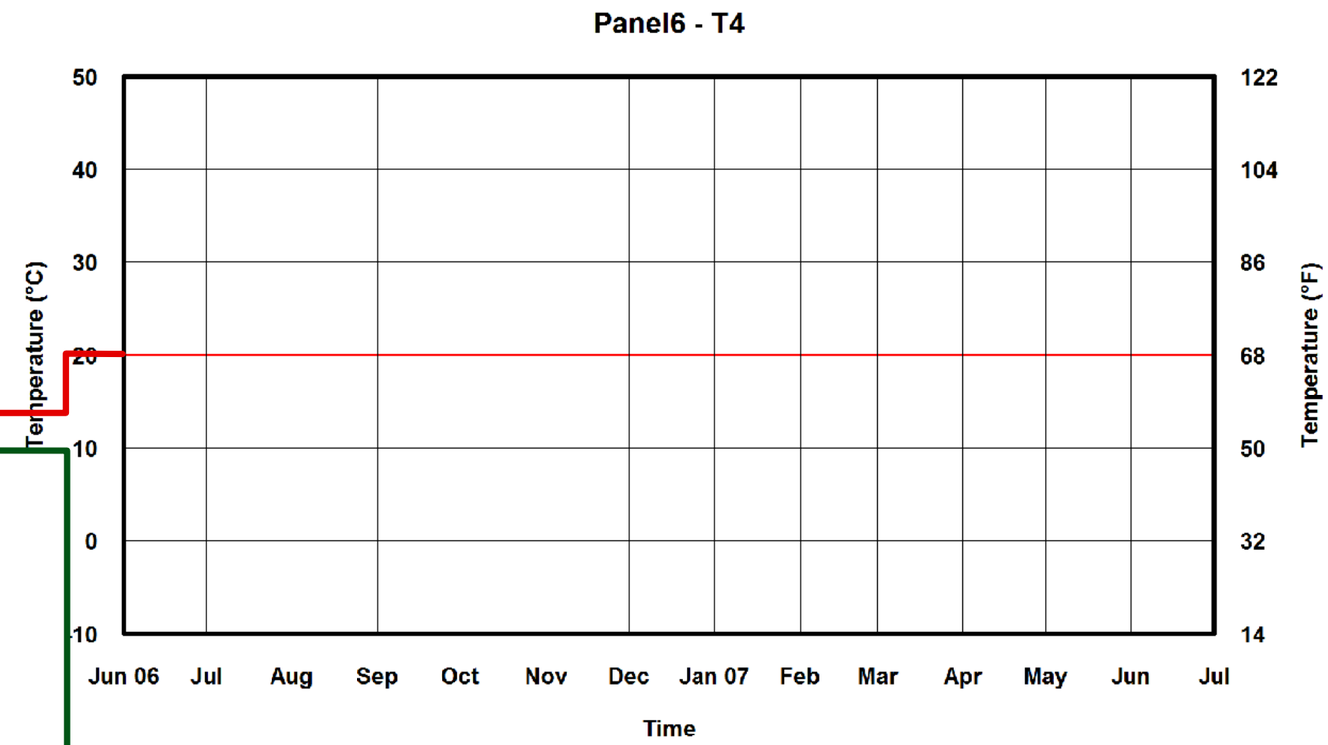
Panel6 - T4
Temperature (°C)
50
40
30
20
10
0
-10
Temperature (°F)
122
104
86
68
50
32
14
Jun 06
Jul
Aug
Sep
Oct
Nov
Dec
Jan 07
Feb
Mar
Apr
May
Jun
Jul
Time

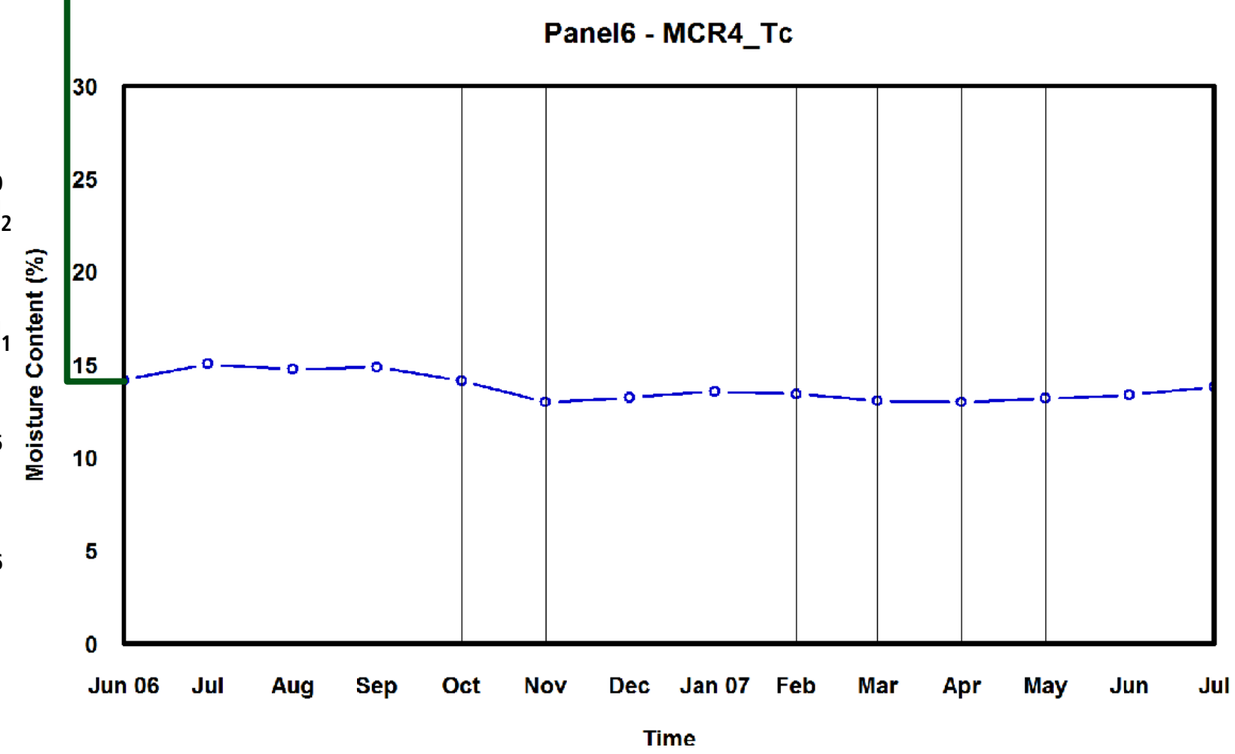
Panel6 - MCR4_Tc
Moisture Content (%)
30
25
20
15
10
5
0
Jun 06
Jul
Aug
Sep
Oct
Nov
Dec
Jan 07
Feb
Mar
Apr
May
Jun
Jul
Time

Panel 6

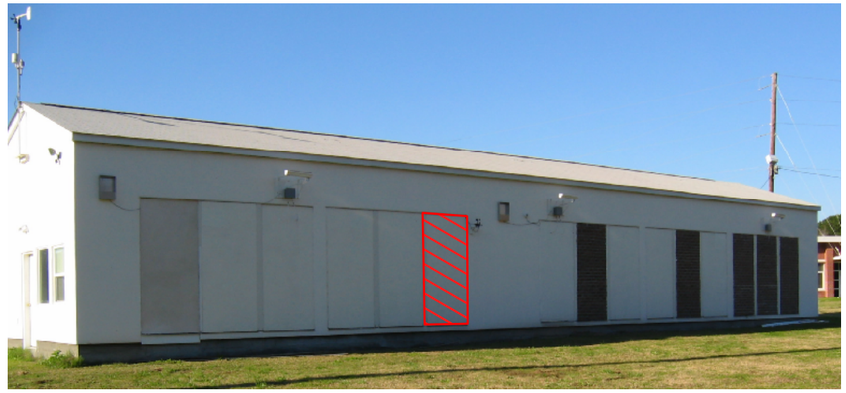

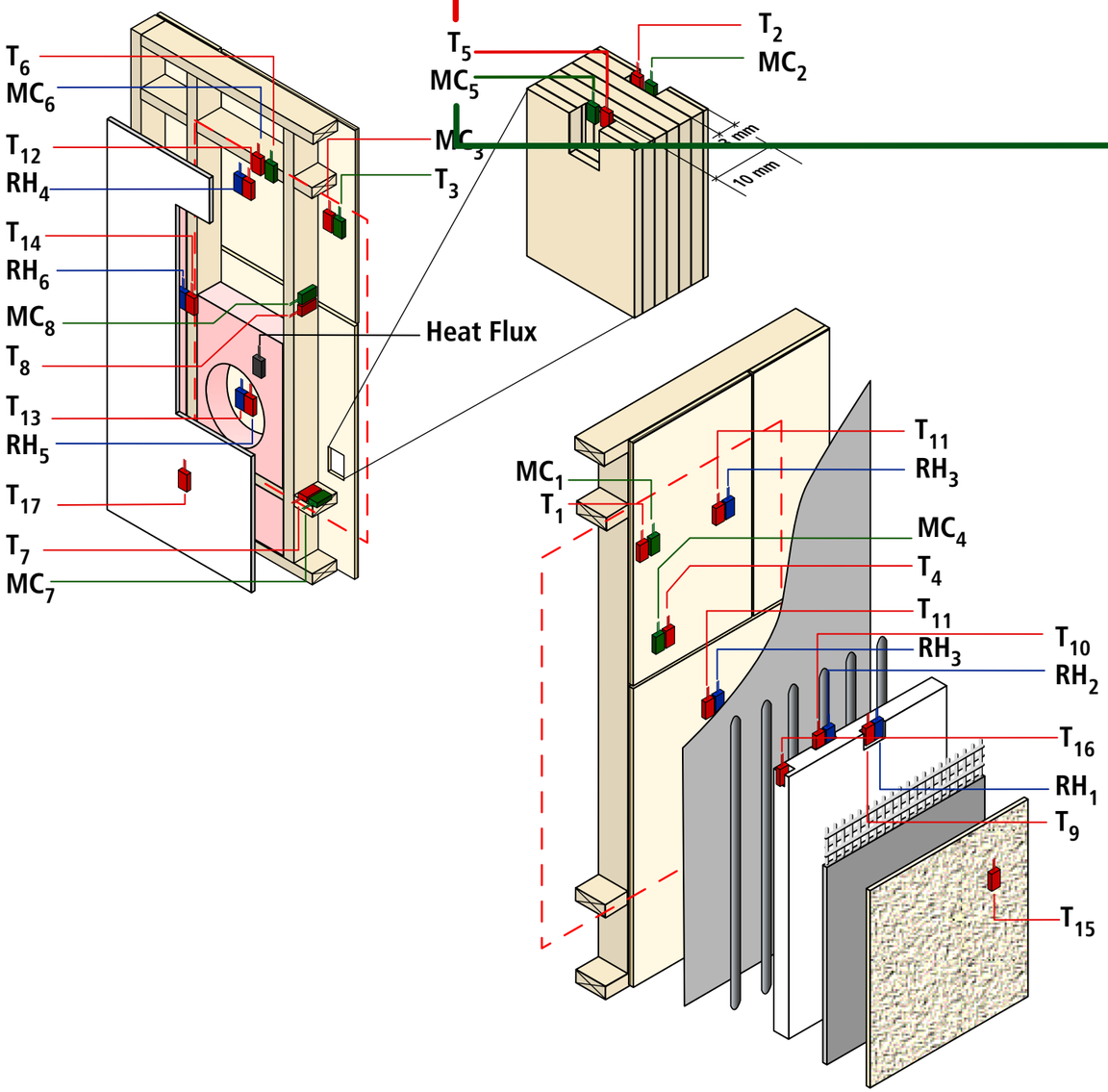
T_6
MC_6
T_{12}
RH_4
T_{14}
RH_6
MC_8
T_8
T_{13}
RH_5
T_{17}
T_7
MC_7
T_5
MC_5
MC_3
T_3
T_2
MC_2
2 mm
10 mm
Heat Flux
MC_1
T_1
T_{11}
RH_3
MC_4
T_4
T_{11}
RH_3
T_{10}
RH_2
T_{16}
RH_1
T_9
T_{15}

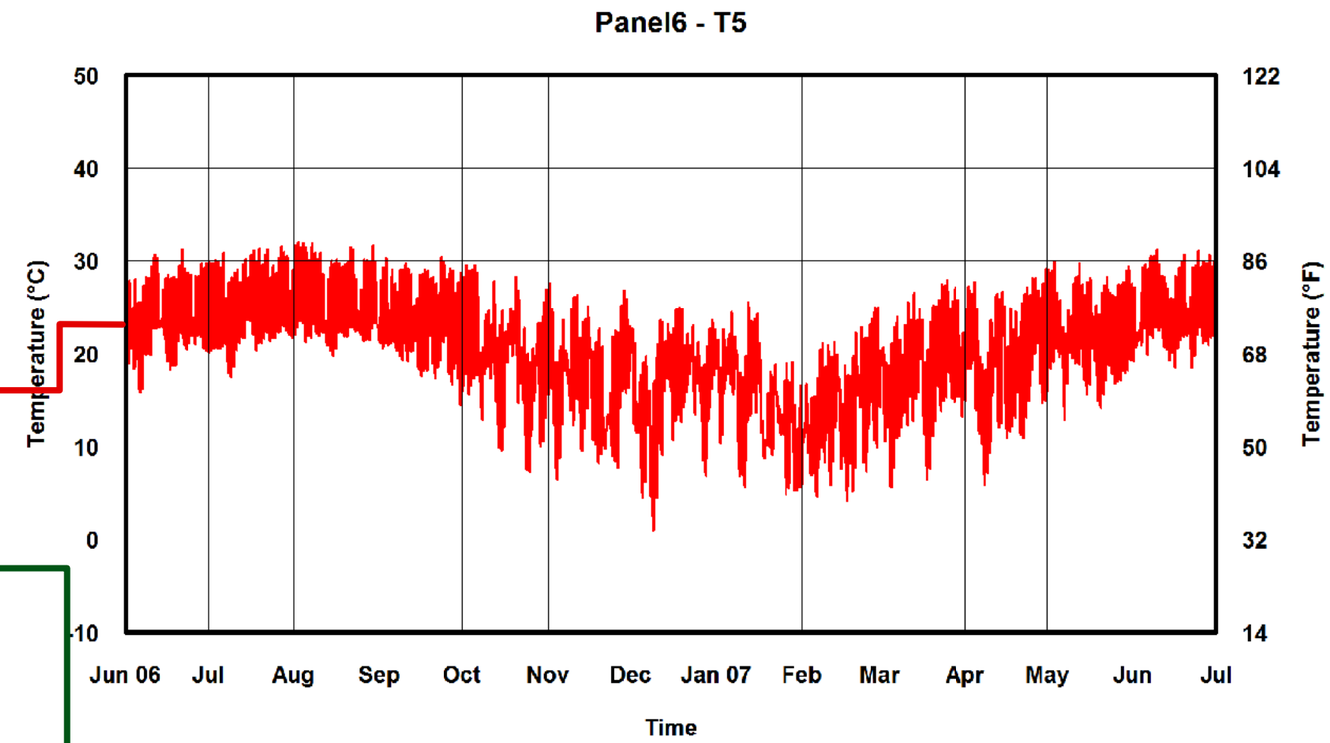
Panel6 - T5
Temperature (°C)
Temperature (°F)
50
40
30
20
10
0
-10
122
104
86
68
50
32
14
Jun 06
Jul
Aug
Sep
Oct
Nov
Dec
Jan 07
Feb
Mar
Apr
May
Jun
Jul
Time

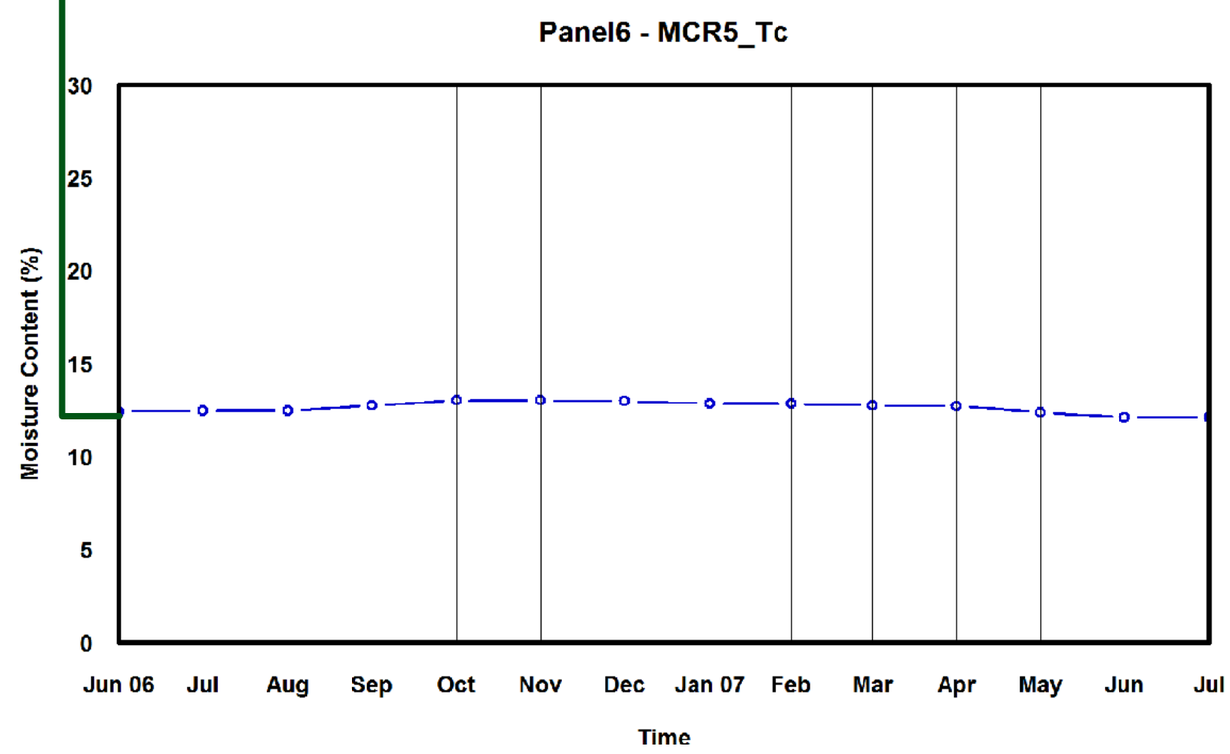
Panel6 - MCR5_Tc
Moisture Content (%)
30
25
20
15
10
5
0
Jun 06
Jul
Aug
Sep
Oct
Nov
Dec
Jan 07
Feb
Mar
Apr
May
Jun
Jul
Time

Panel 6

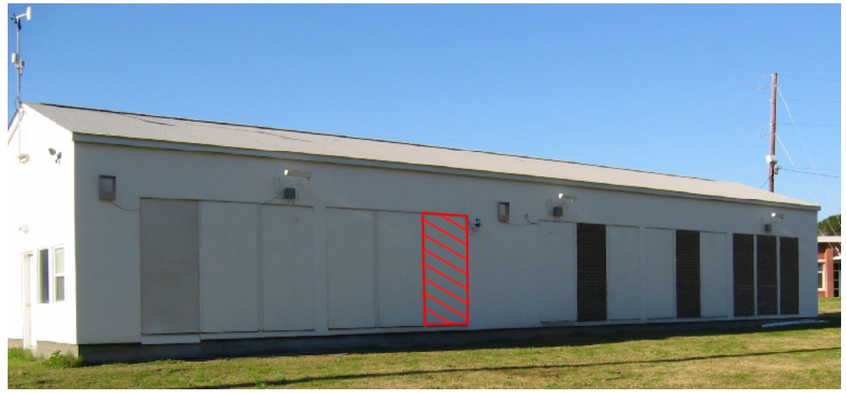

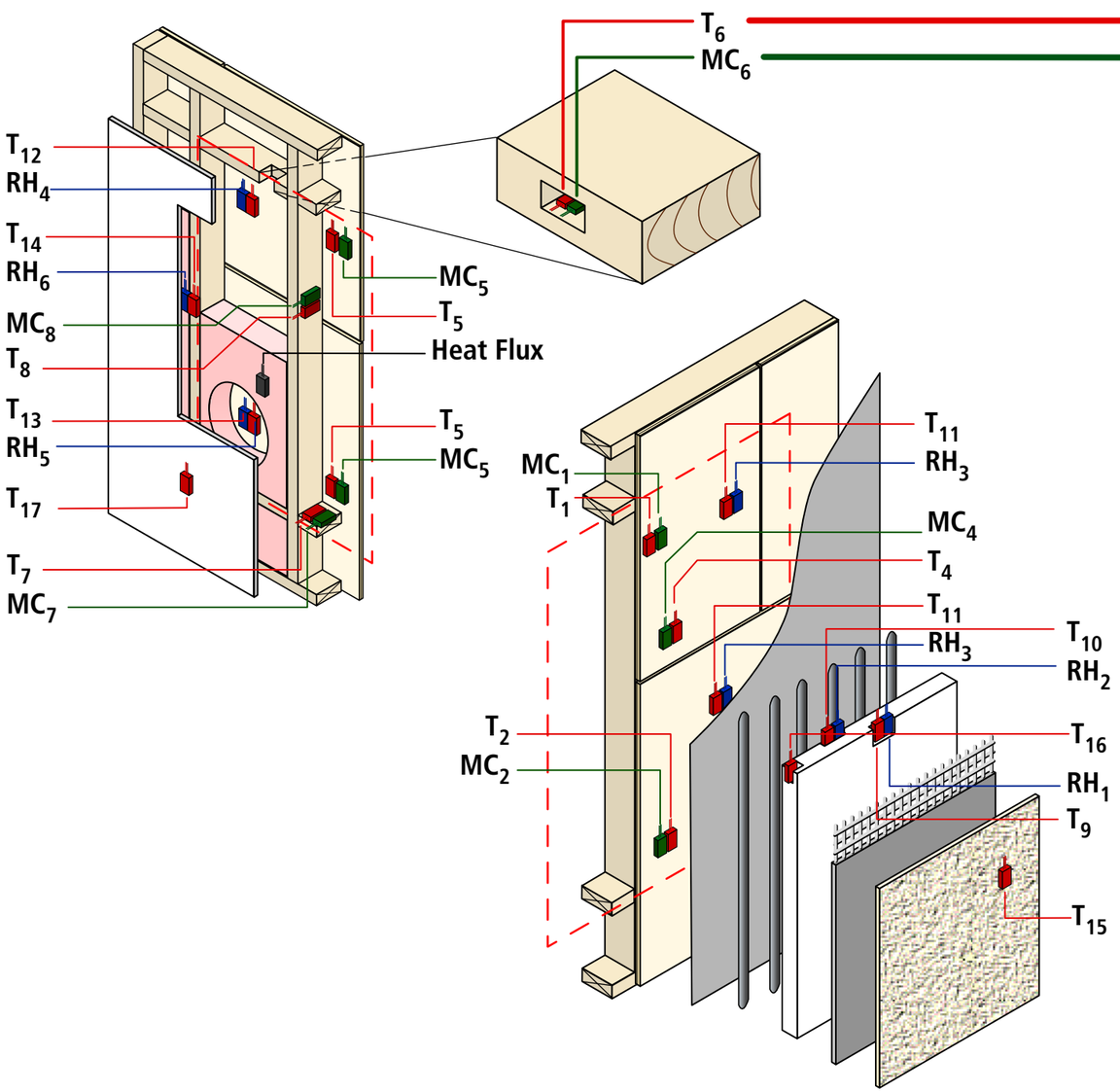
T_6
MC_6
T_{12}
RH_4
T_{14}
RH_6
MC_8
T_8
T_{13}
RH_5
T_{17}
T_7
MC_7
MC_5
T_5
Heat Flux
T_5
MC_5
MC_1
T_1
T_{11}
RH_3
MC_4
T_4
T_{11}
RH_3
T_{10}
RH_2
T_2
MC_2
T_{16}
RH_1
T_9
T_{15}

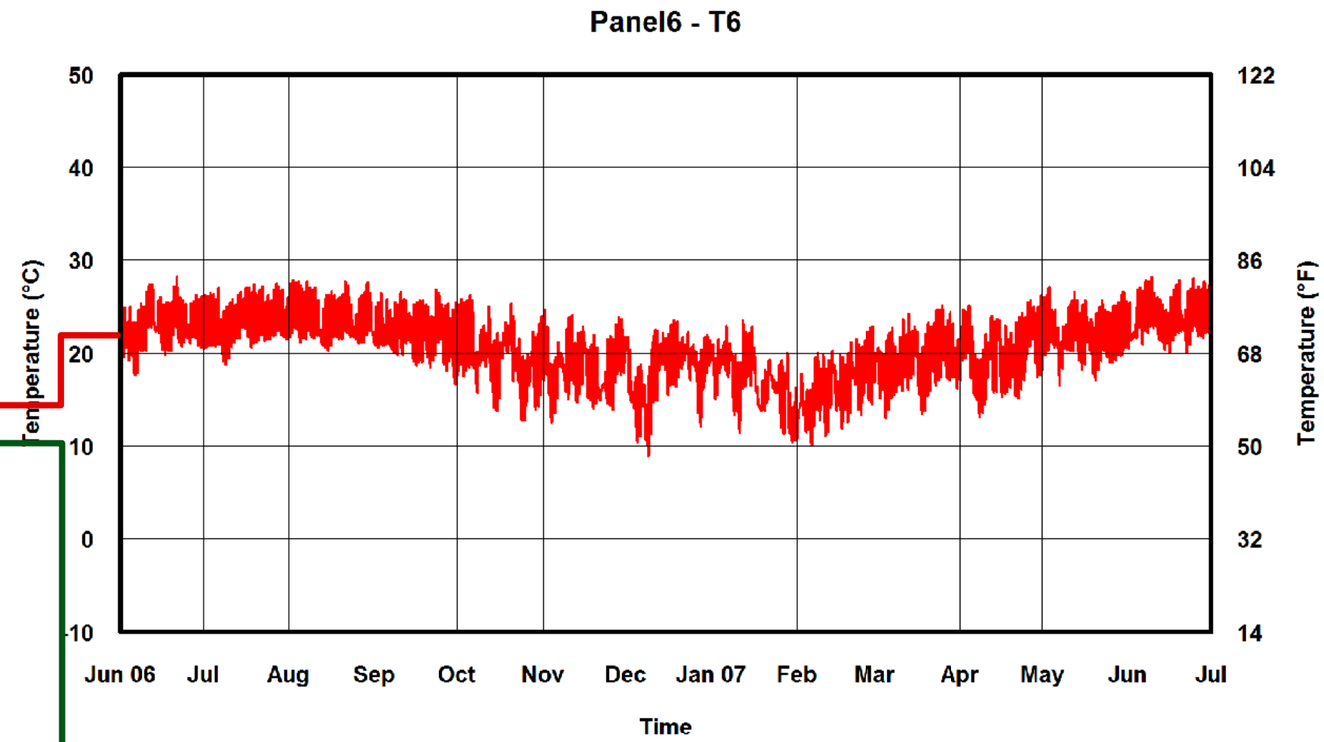
Panel6 - T6
Temperature (°C)
50
40
30
20
10
0
-10
Temperature (°F)
122
104
86
68
50
32
14
Jun 06
Jul
Aug
Sep
Oct
Nov
Dec
Jan 07
Feb
Mar
Apr
May
Jun
Jul
Time

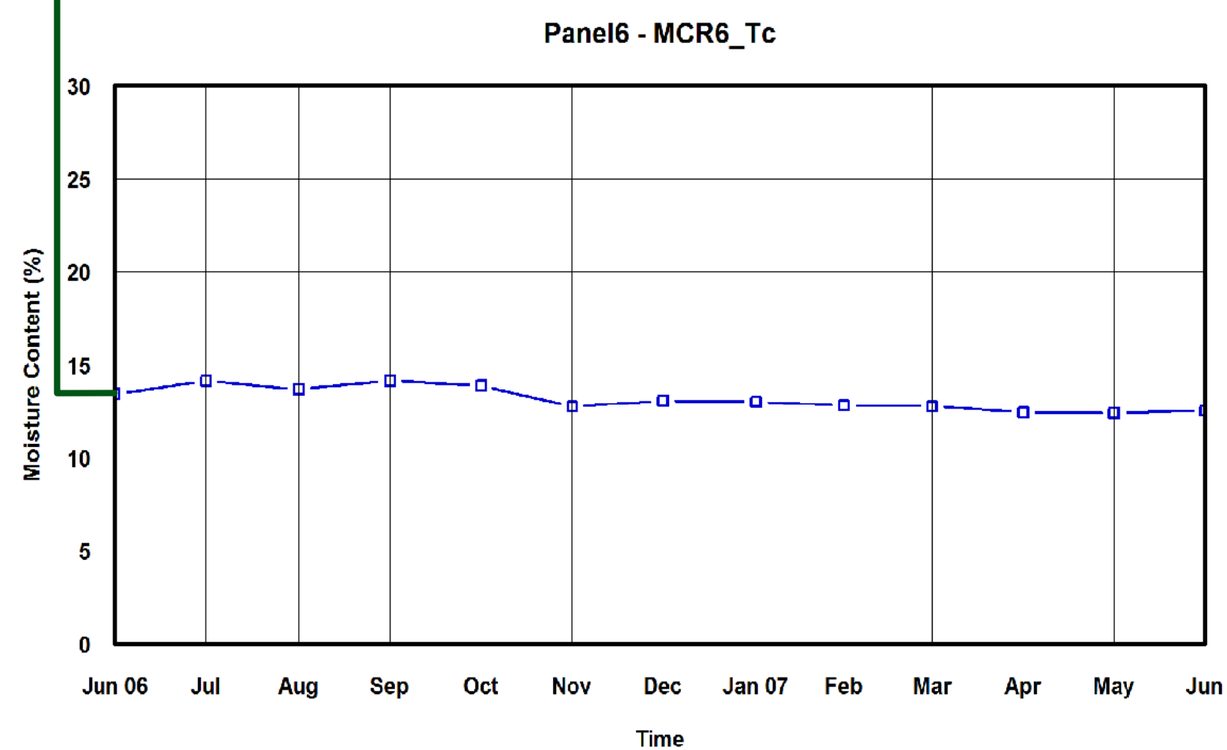
Panel6 - MCR6_Tc
Moisture Content (%)
30
25
20
15
10
5
0
Jun 06
Jul
Aug
Sep
Oct
Nov
Dec
Jan 07
Feb
Mar
Apr
May
Jun
Time

Panel 6

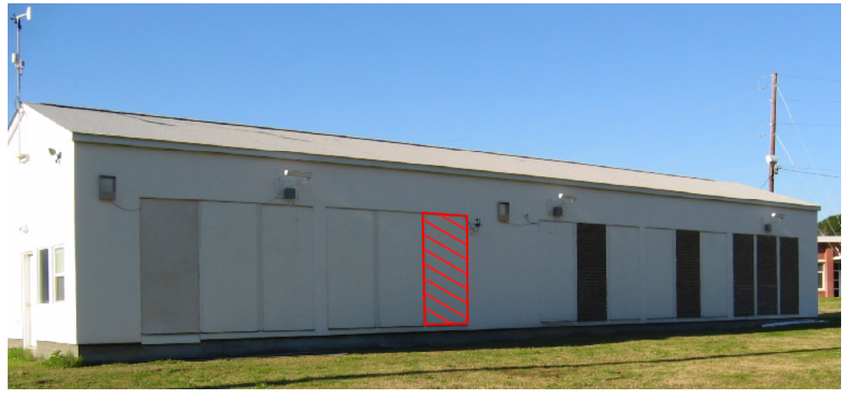

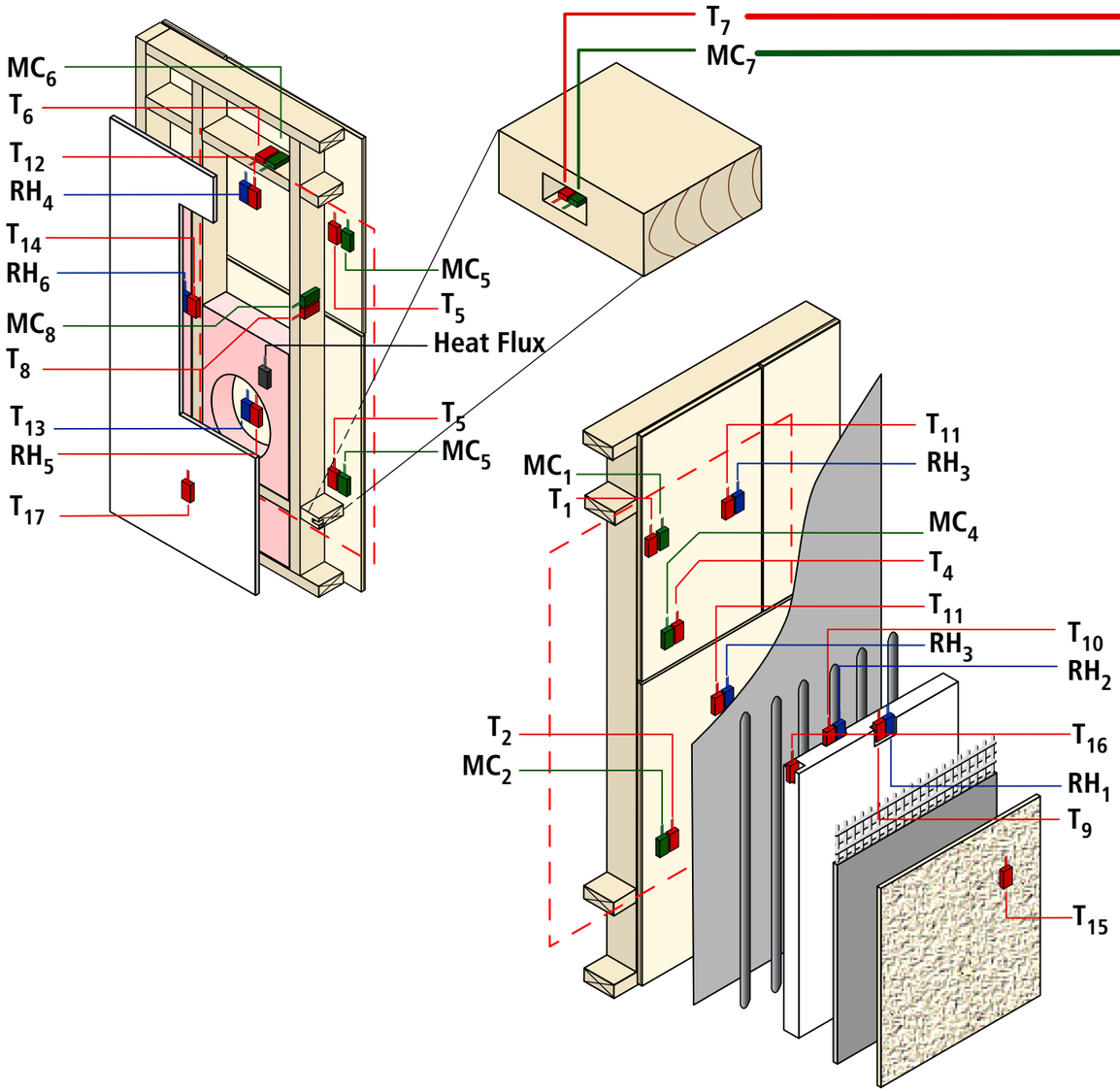
T_7
MC_7
MC_6
T_6
T_{12}
RH_4
T_{14}
RH_6
MC_8
T_8
T_{13}
RH_5
T_{17}
MC_5
T_5
Heat Flux
T_5
MC_5
MC_1
T_1
T_{11}
RH_3
MC_4
T_4
T_{11}
RH_3
T_{10}
RH_2
T_2
MC_2
T_{16}
RH_1
T_9
T_{15}

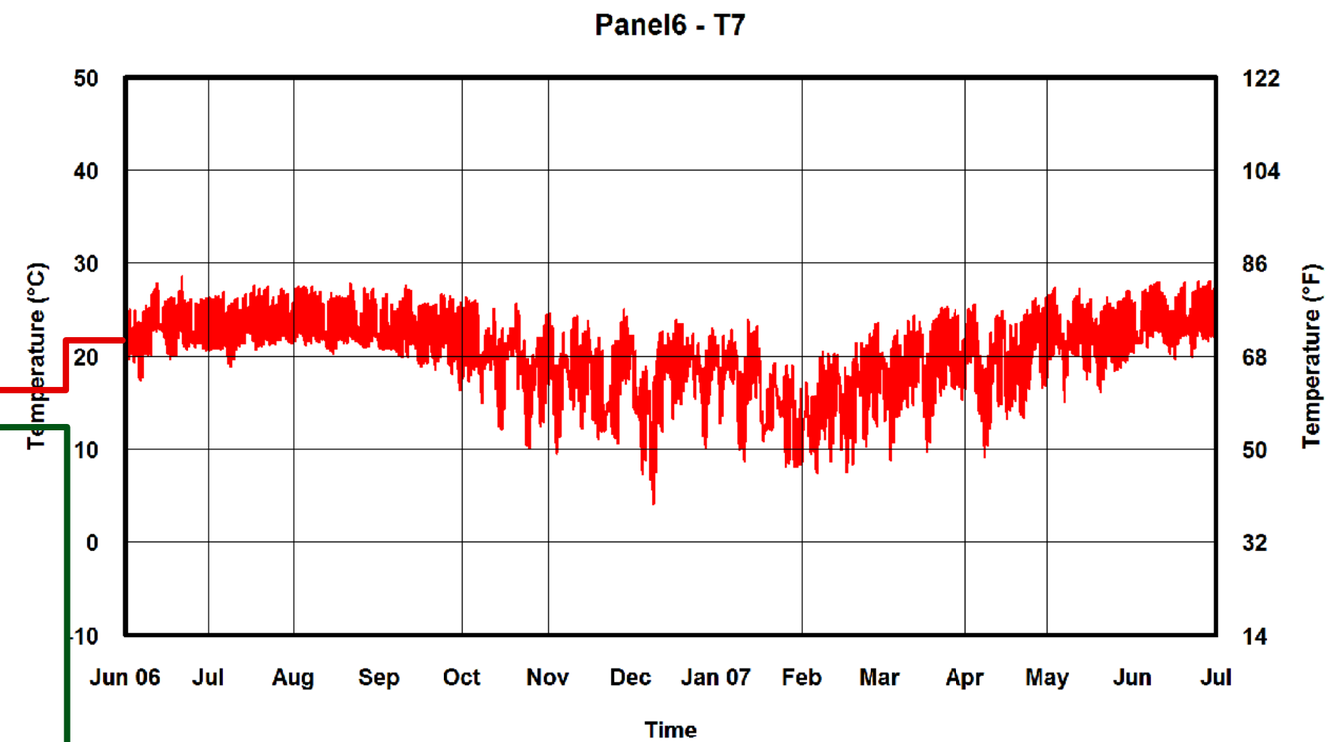
Panel6 - T7
Temperature (°C)
50
40
30
20
10
0
-10
Temperature (°F)
122
104
86
68
50
32
14
Jun 06
Jul
Aug
Sep
Oct
Nov
Dec
Jan 07
Feb
Mar
Apr
May
Jun
Jul
Time

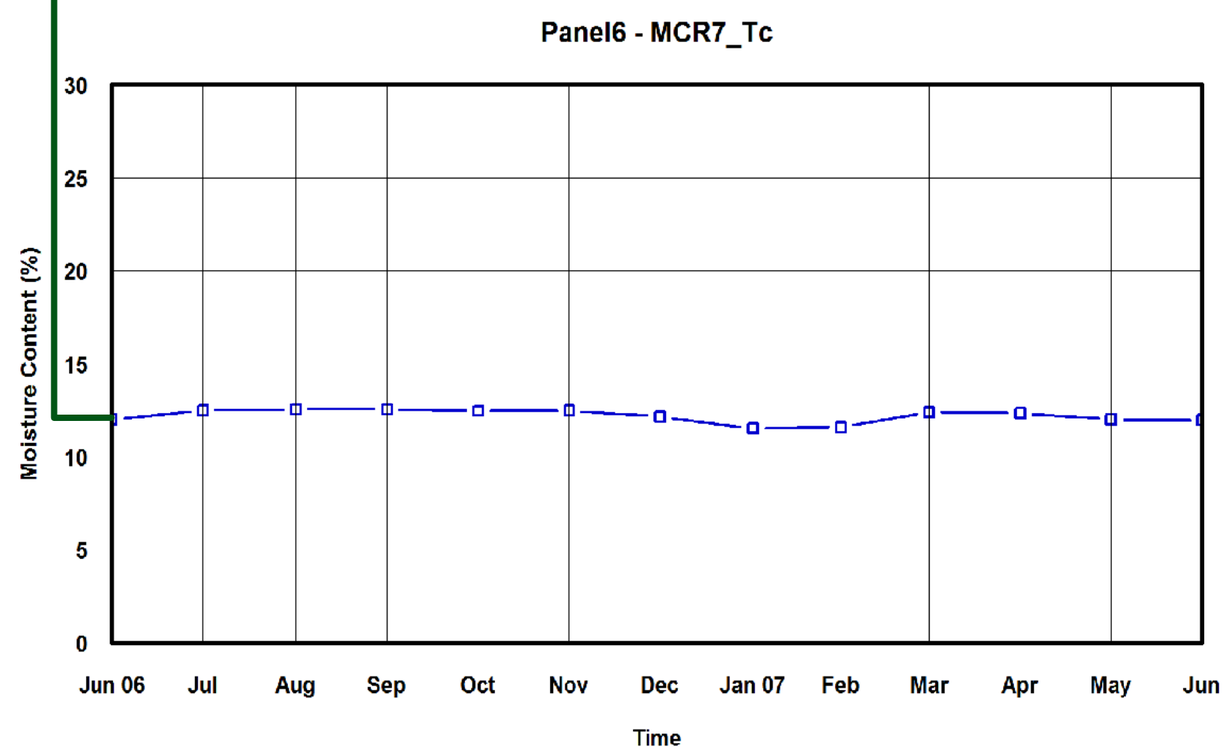
Panel6 - MCR7_Tc
Moisture Content (%)
30
25
20
15
10
5
0
Jun 06
Jul
Aug
Sep
Oct
Nov
Dec
Jan 07
Feb
Mar
Apr
May
Jun
Time

Panel 6

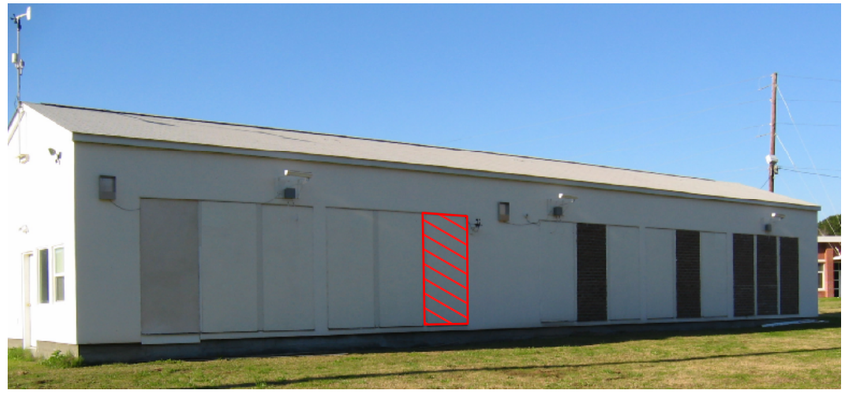

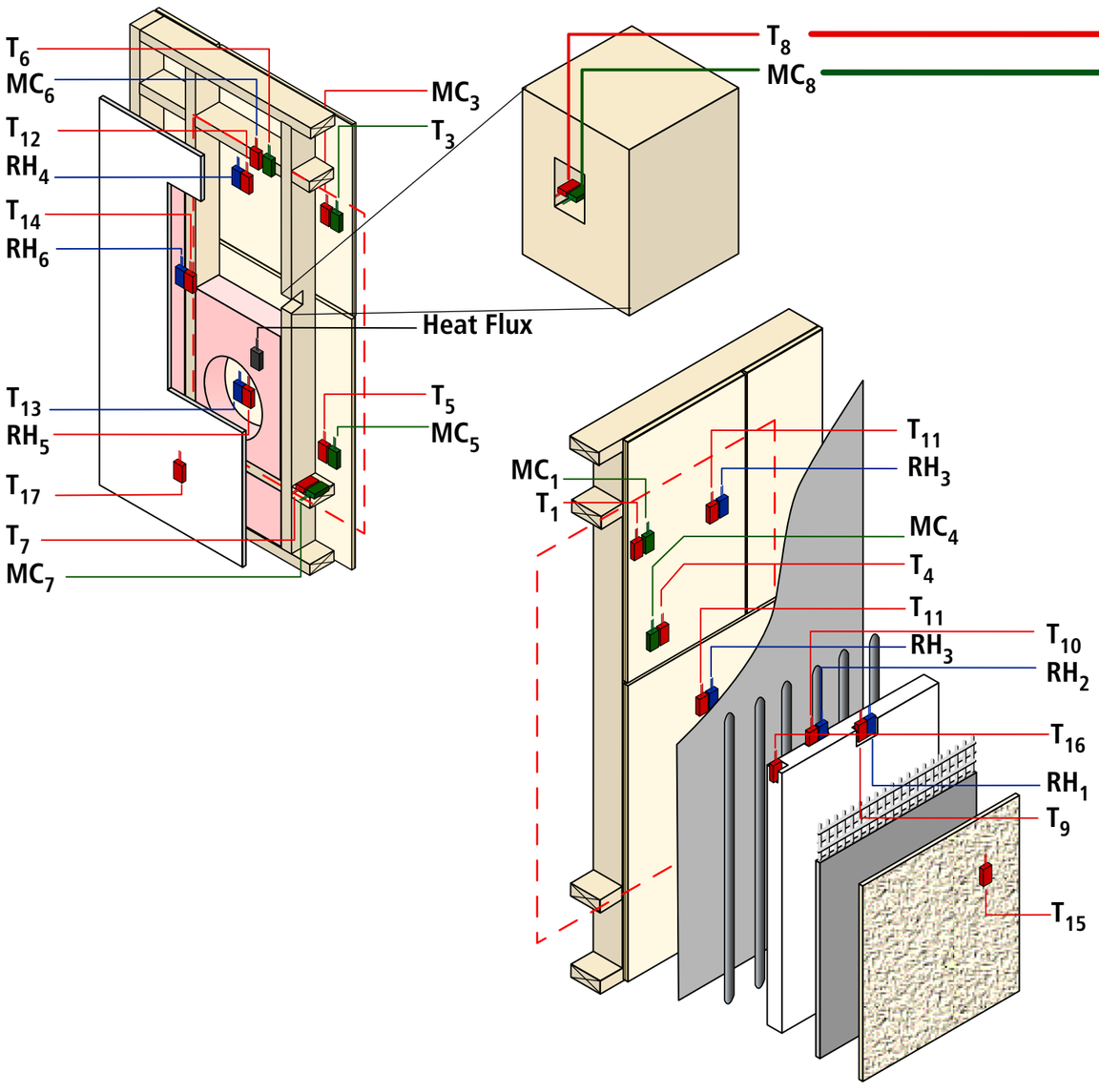
T_6
MC_6
T_{12}
RH_4
T_{14}
RH_6
T_{13}
RH_5
T_{17}
T_7
MC_7
MC_3
T_3
Heat Flux
T_5
MC_5
T_8
MC_8
MC_1
T_1
T_{11}
RH_3
MC_4
T_4
T_{11}
RH_3
T_{10}
RH_2
T_{16}
RH_1
T_9
T_{15}

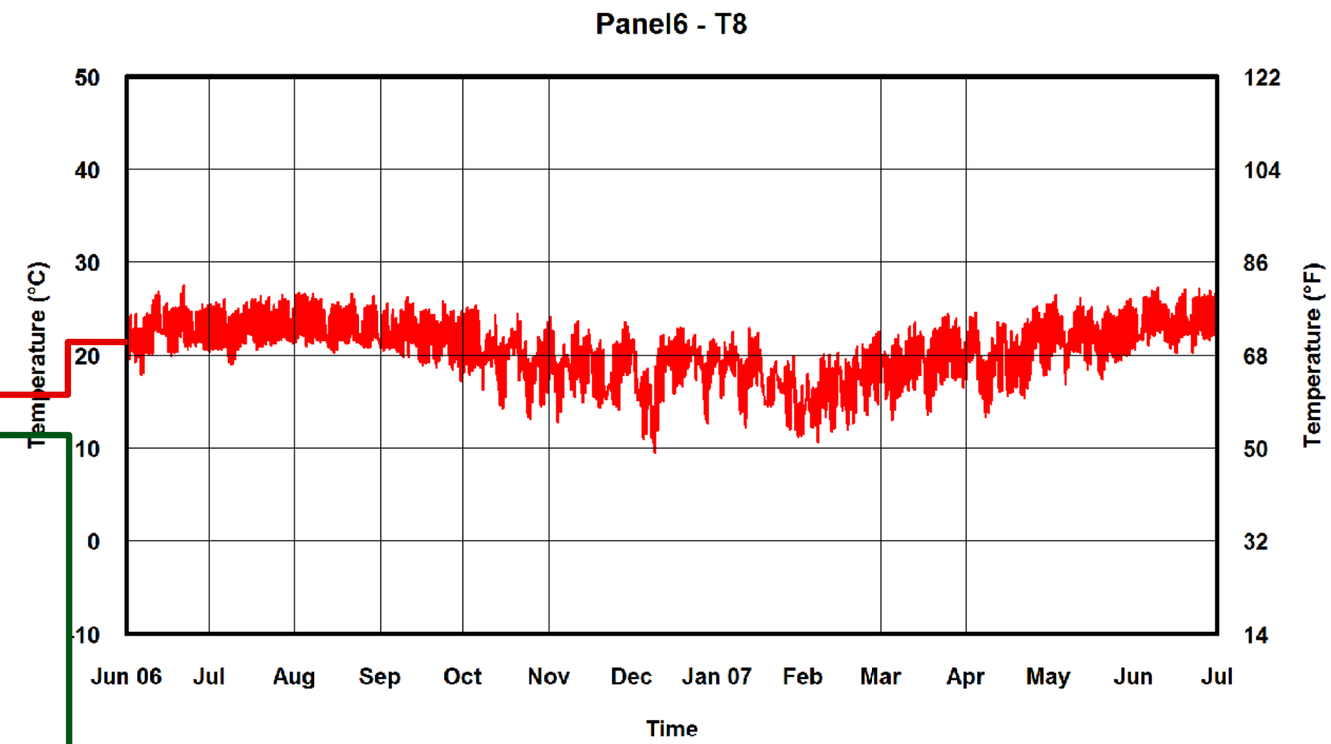
Panel6 - T8
Temperature (°C)
50
40
30
20
10
0
-10
Temperature (°F)
122
104
86
68
50
32
14
Jun 06
Jul
Aug
Sep
Oct
Nov
Dec
Jan 07
Feb
Mar
Apr
May
Jun
Jul
Time

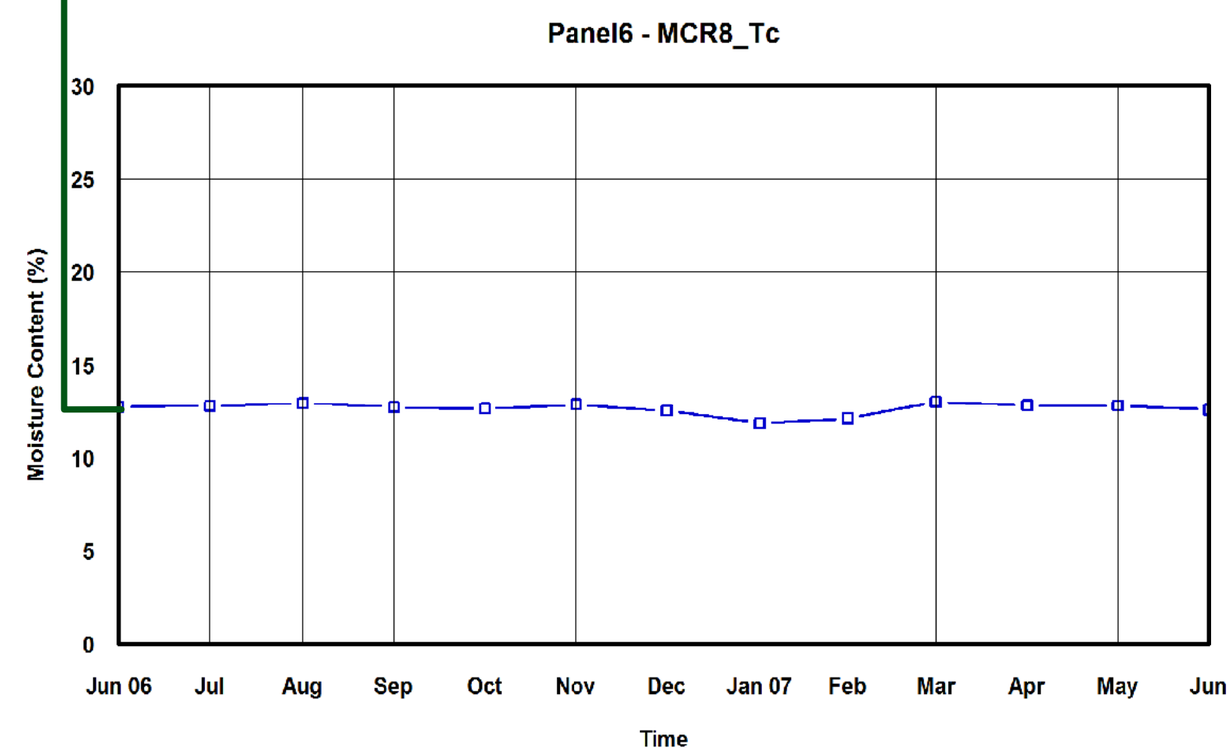
Panel6 - MCR8_Tc
Moisture Content (%)
30
25
20
15
10
5
0
Jun 06
Jul
Aug
Sep
Oct
Nov
Dec
Jan 07
Feb
Mar
Apr
May
Jun
Time

Panel 6

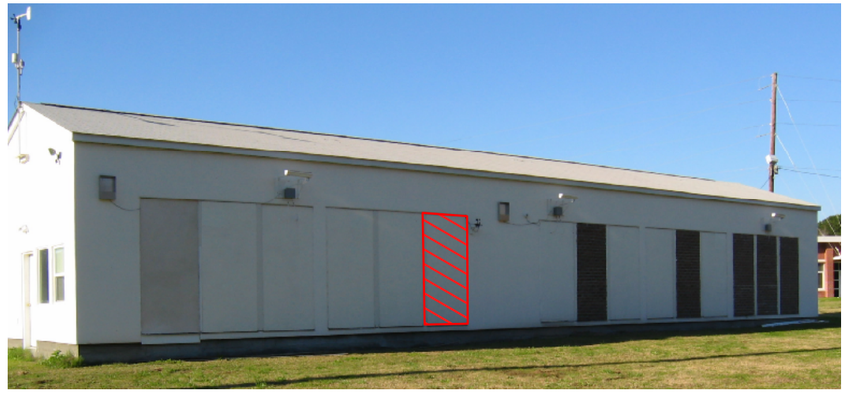

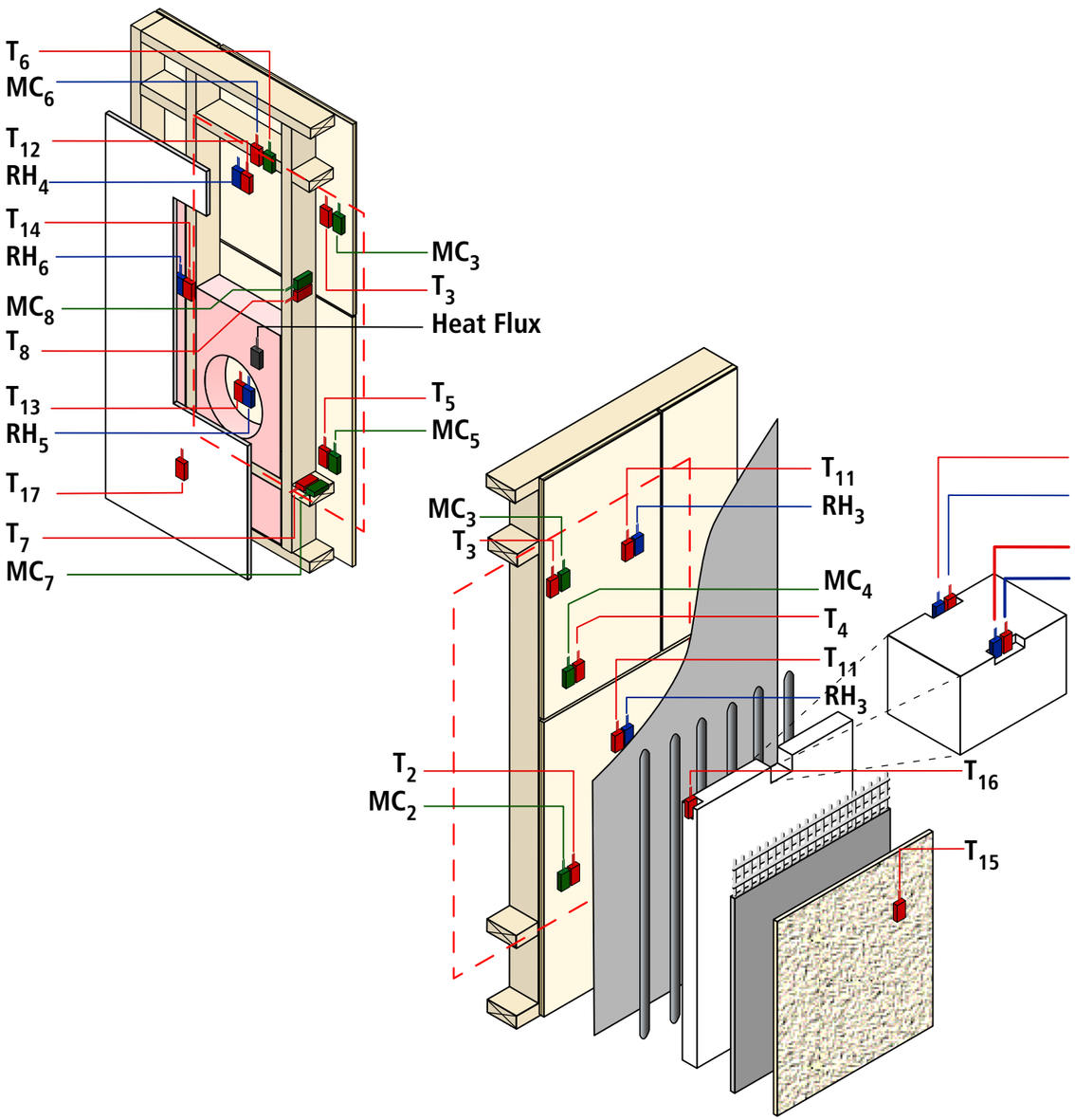
T_6
MC_6
T_{12}
RH_4
T_{14}
RH_6
MC_8
T_8
T_{13}
RH_5
T_{17}
T_7
MC_7
MC_3
T_3
Heat Flux
T_5
MC_5
T_{11}
RH_3
MC_3
T_3
MC_4
T_4
T_{11}
RH_3
T_2
MC_2
T_{10}
RH_2
T_9
RH_1
T_{16}
T_{15}

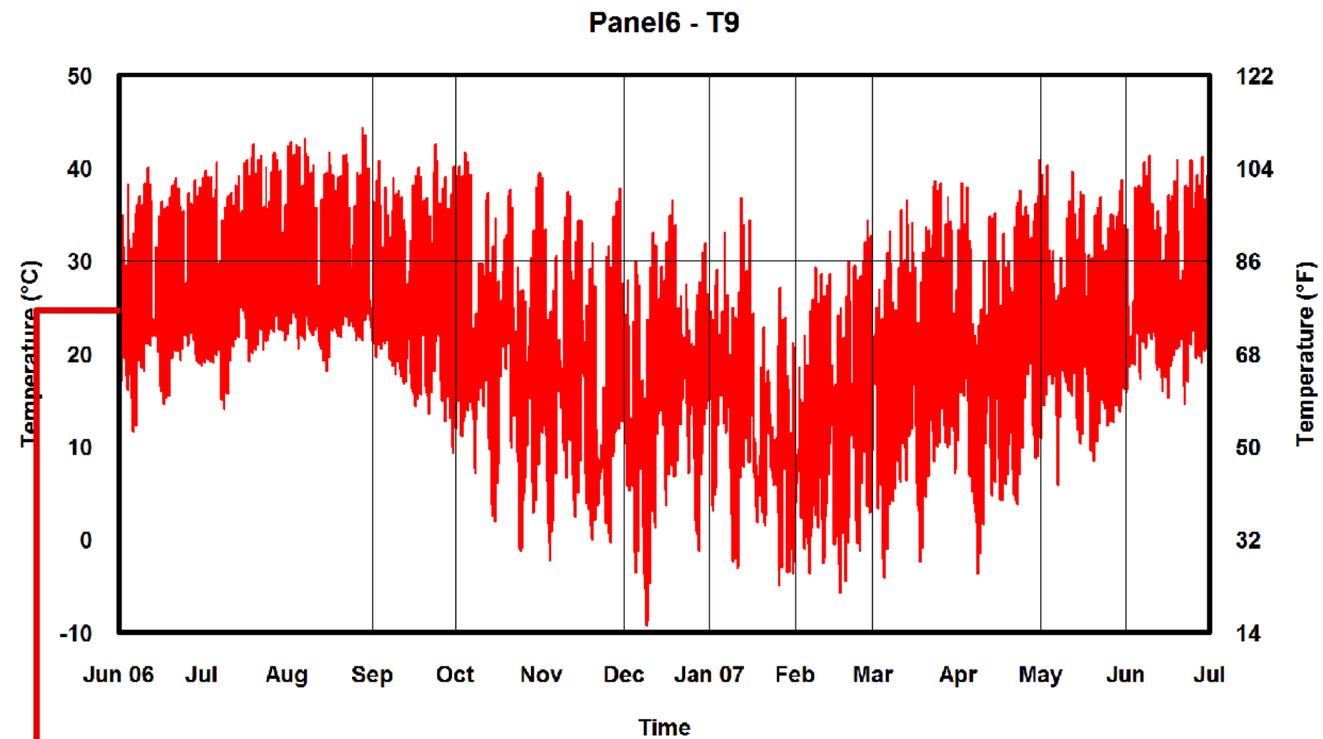
Panel6 - T9
Temperature (°C)
Temperature (°F)
50
40
30
20
10
0
-10
122
104
86
68
50
32
14
Jun 06
Jul
Aug
Sep
Oct
Nov
Dec
Jan 07
Feb
Mar
Apr
May
Jun
Jul
Time

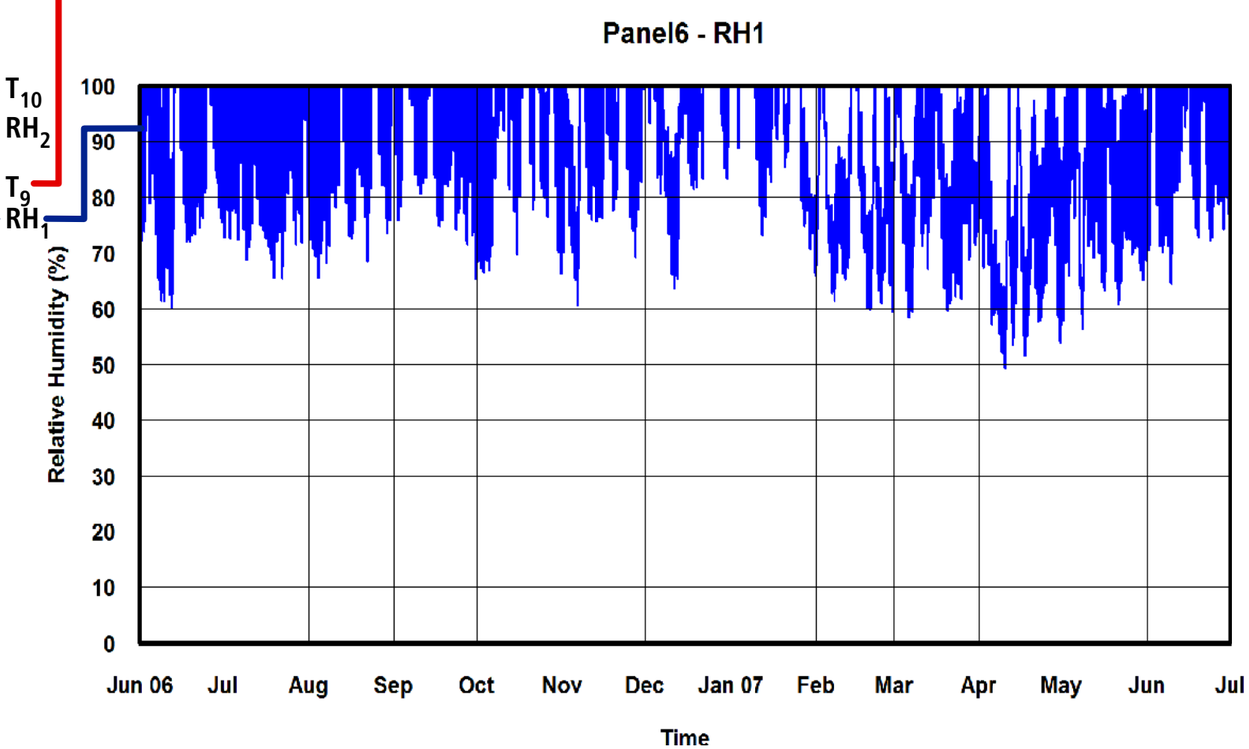
Panel6 - RH1
Relative Humidity (%)
100
90
80
70
60
50
40
30
20
10
0
Jun 06
Jul
Aug
Sep
Oct
Nov
Dec
Jan 07
Feb
Mar
Apr
May
Jun
Jul
Time

Panel 6

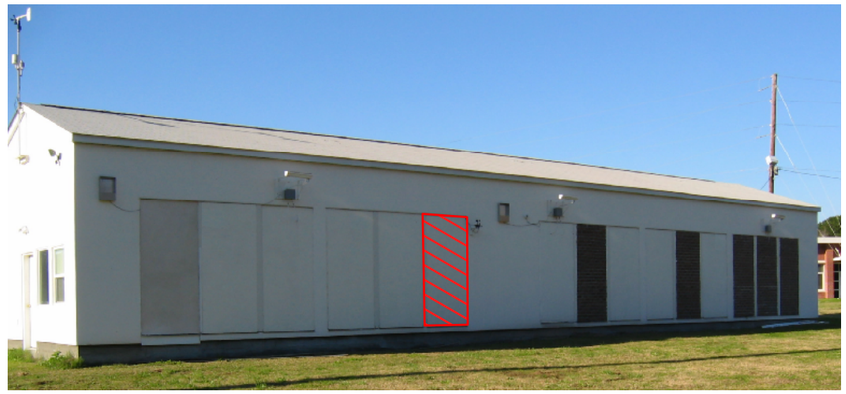

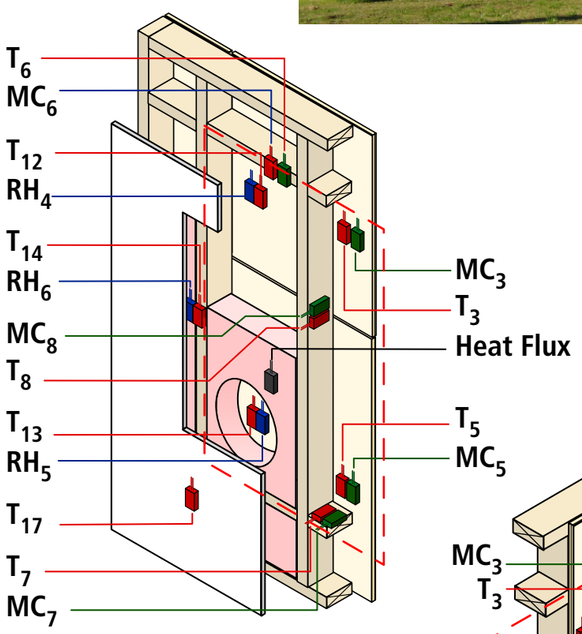
T_6
MC_6
T_{12}
RH_4
T_{14}
RH_6
MC_8
T_8
T_{13}
RH_5
T_{17}
T_7
MC_7
MC_3
T_3
Heat Flux
T_5
MC_5

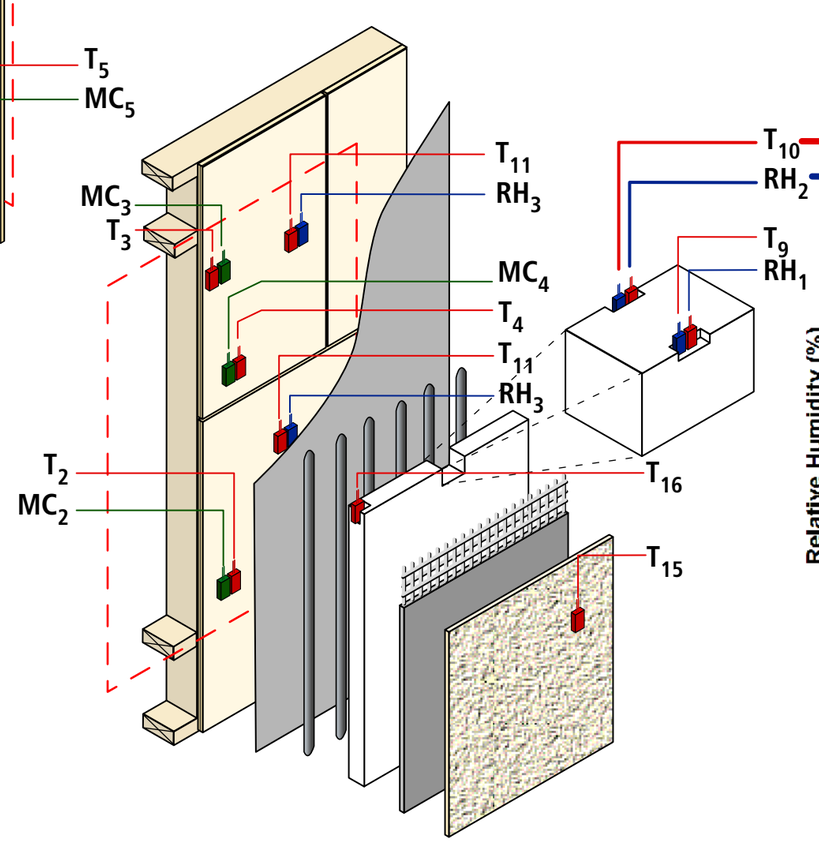
T_{11}
RH_3
MC_3
T_3
MC_4
T_4
T_{11}
RH_3
T_2
MC_2
T_{16}
T_{15}
T_{10}
RH_2
T_9
RH_1

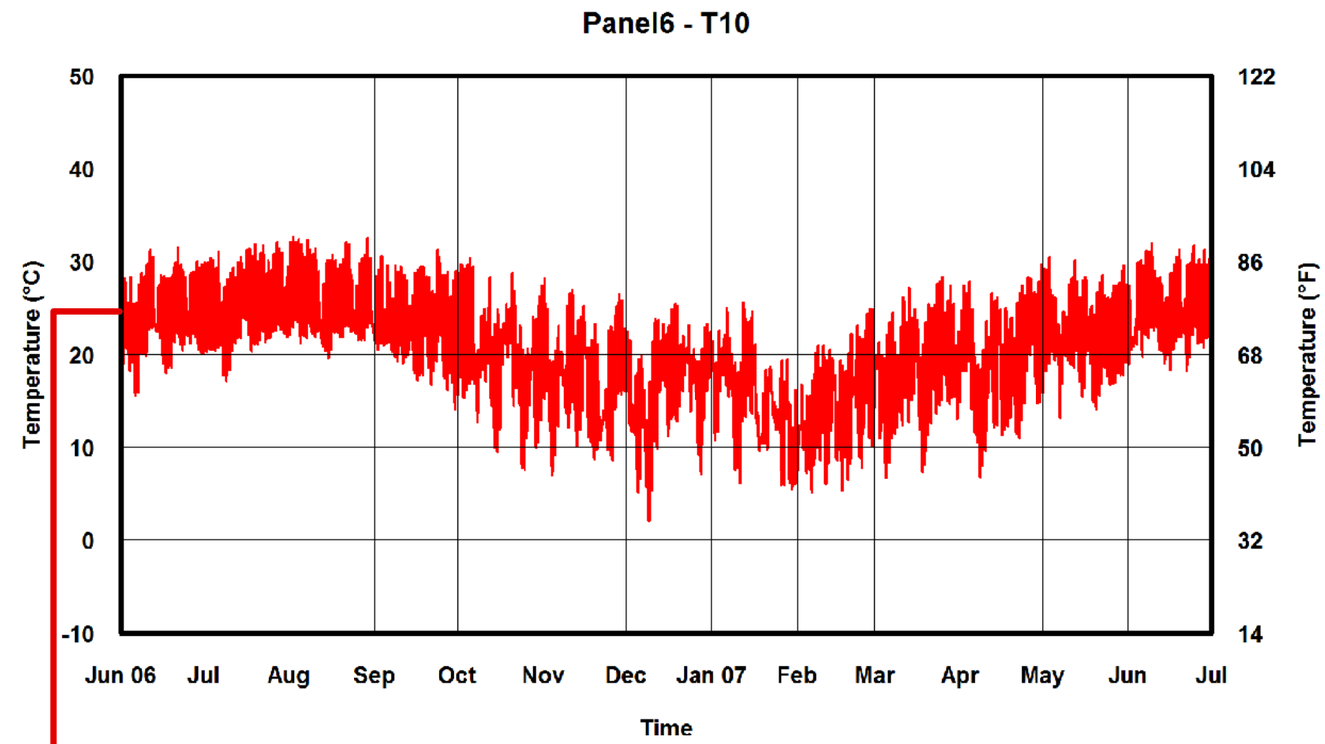
Panel6 - T10
Temperature (°C)
Temperature (°F)
50
40
30
20
10
0
-10
122
104
86
68
50
32
14
Jun 06
Jul
Aug
Sep
Oct
Nov
Dec
Jan 07
Feb
Mar
Apr
May
Jun
Jul
Time

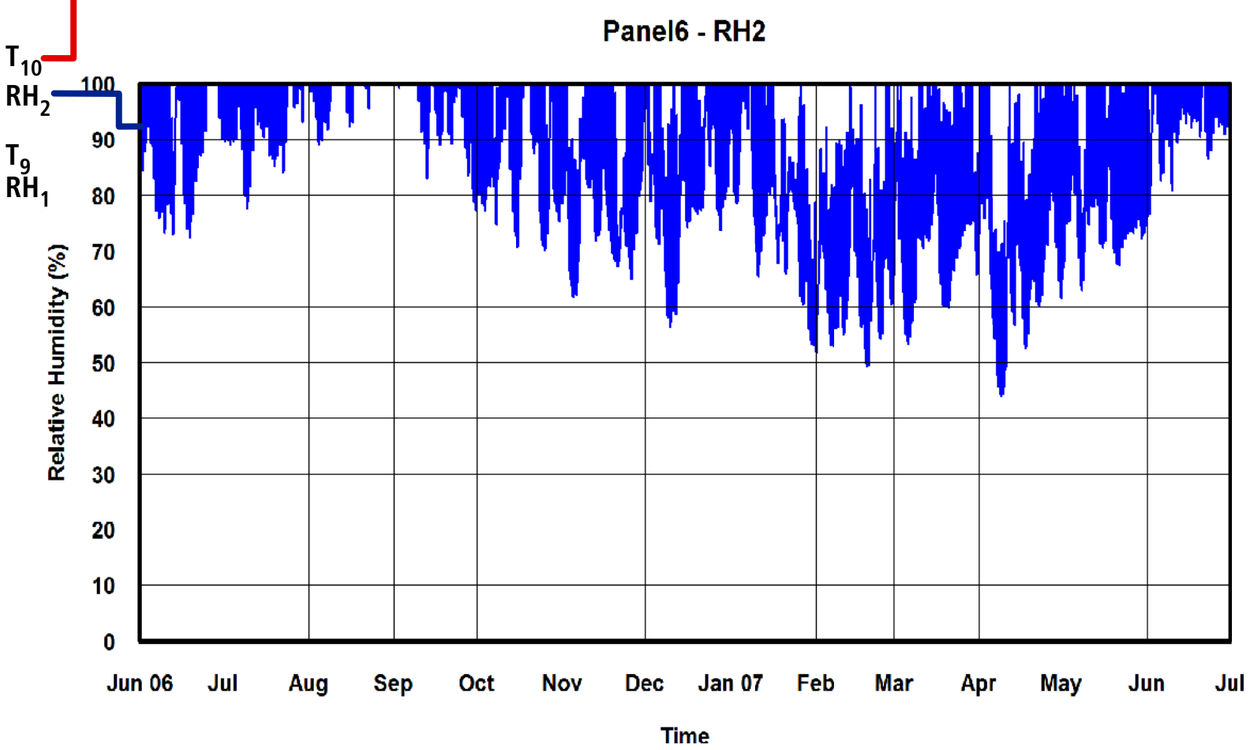
Panel6 - RH2
Relative Humidity (%)
100
90
80
70
60
50
40
30
20
10
0
Jun 06
Jul
Aug
Sep
Oct
Nov
Dec
Jan 07
Feb
Mar
Apr
May
Jun
Jul
Time

Panel 6

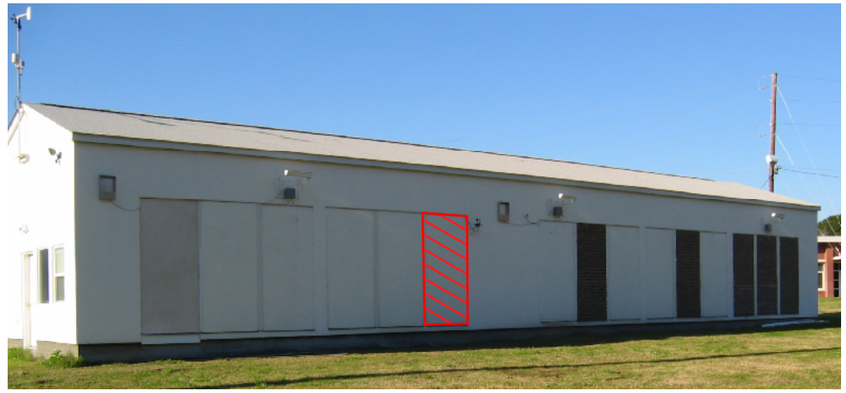

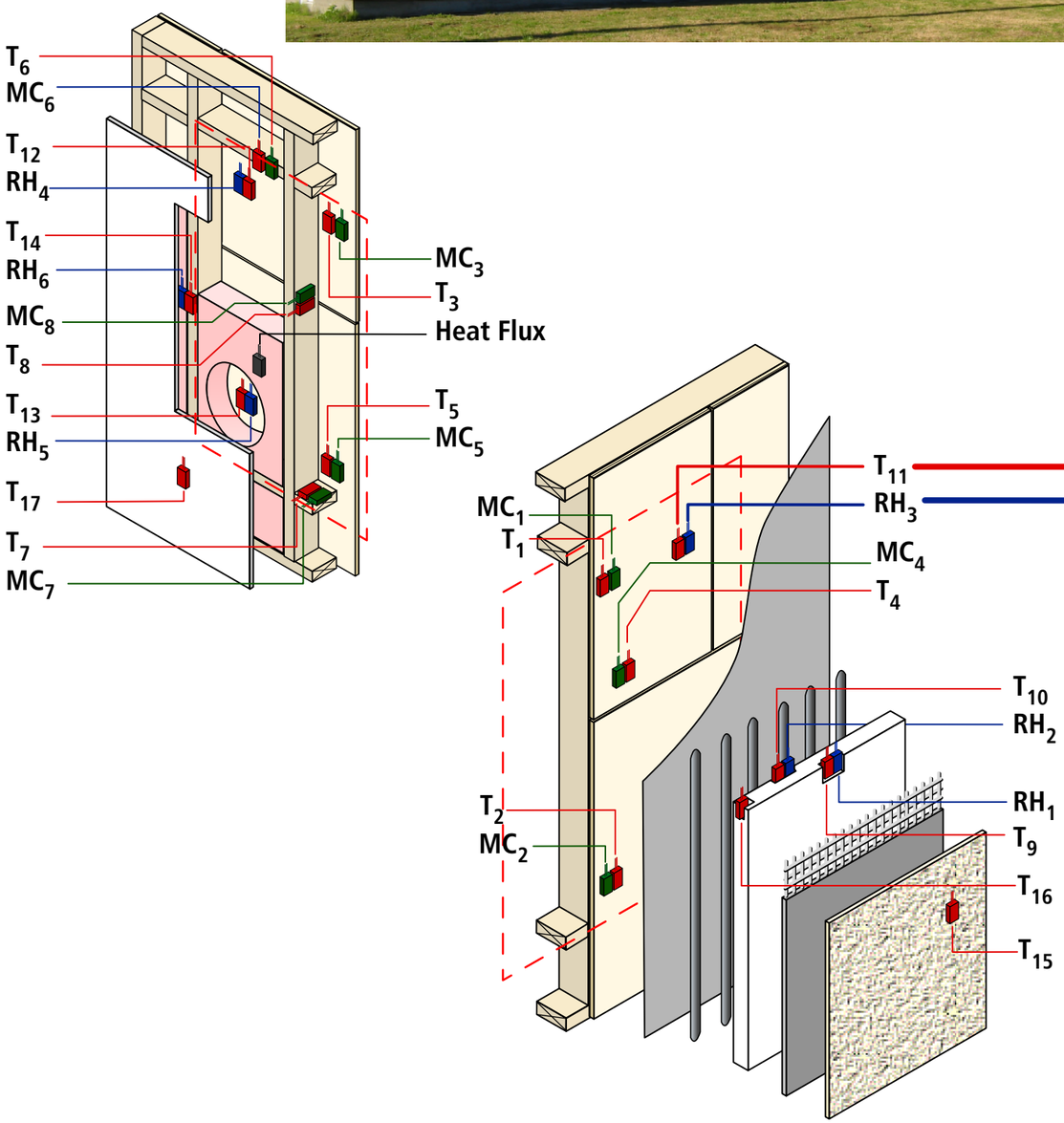
T_6
MC_6
T_{12}
RH_4
T_{14}
RH_6
MC_8
T_8
T_{13}
RH_5
T_{17}
T_7
MC_7
MC_3
T_3
Heat Flux
T_5
MC_5
T_{11}
RH_3
MC_1
T_1
MC_4
T_4
T_{10}
RH_2
RH_1
T_9
T_{16}
T_{15}
T_2
MC_2

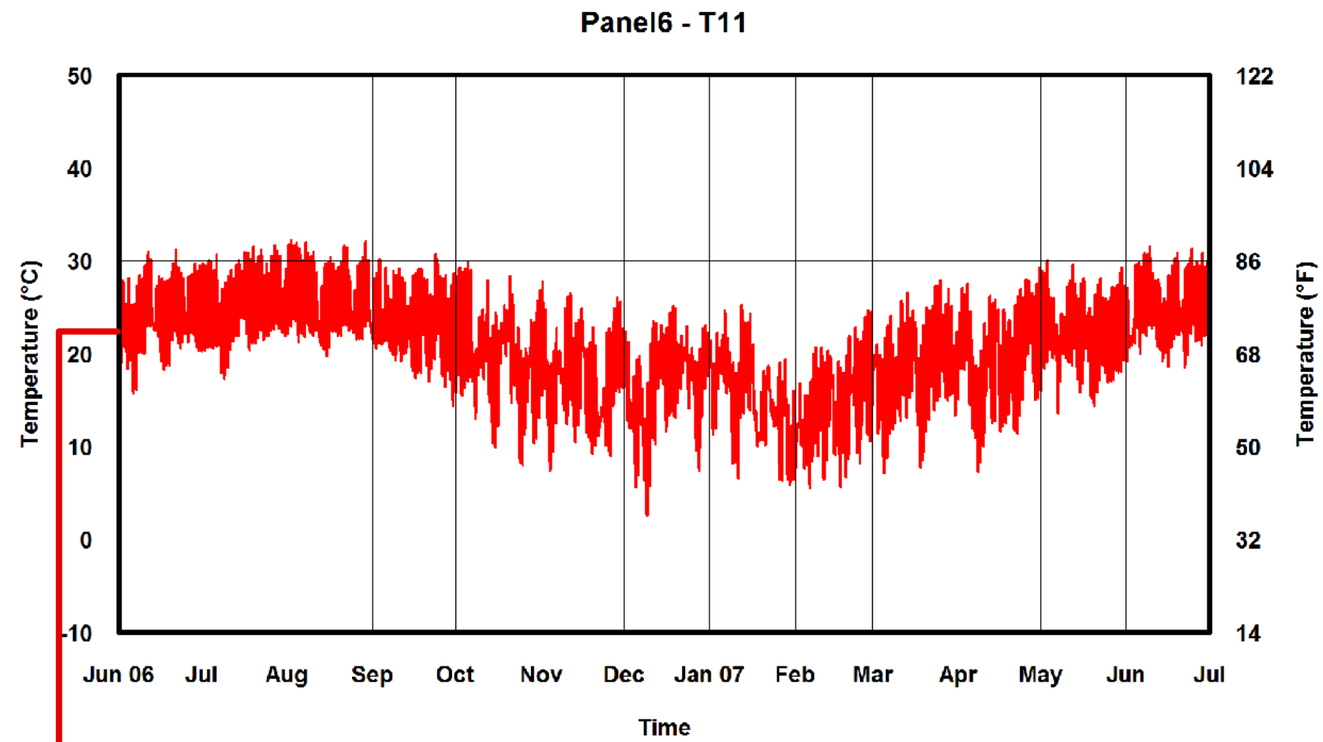
Panel6 - T11
Temperature (°C)
50
40
30
20
10
0
-10
Temperature (°F)
122
104
86
68
50
32
14
Jun 06
Jul
Aug
Sep
Oct
Nov
Dec
Jan 07
Feb
Mar
Apr
May
Jun
Jul
Time

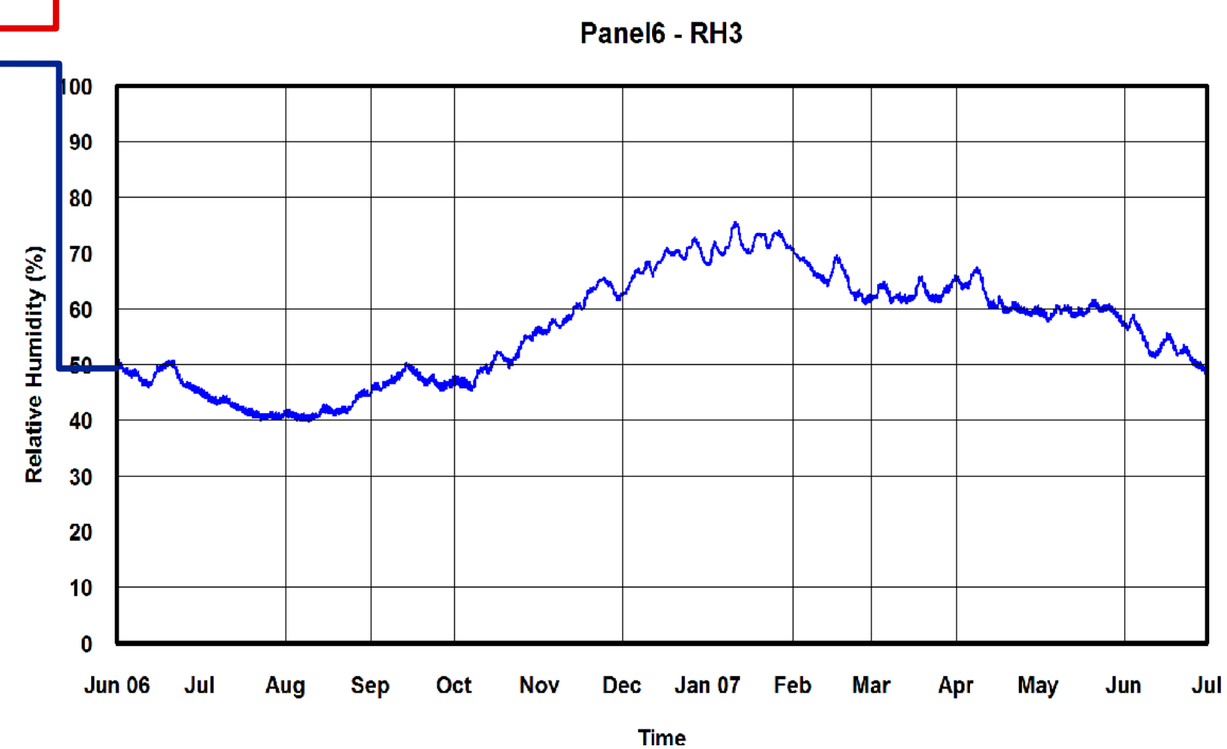
Panel6 - RH3
Relative Humidity (%)
100
90
80
70
60
50
40
30
20
10
0
Jun 06
Jul
Aug
Sep
Oct
Nov
Dec
Jan 07
Feb
Mar
Apr
May
Jun
Jul
Time

Panel 6

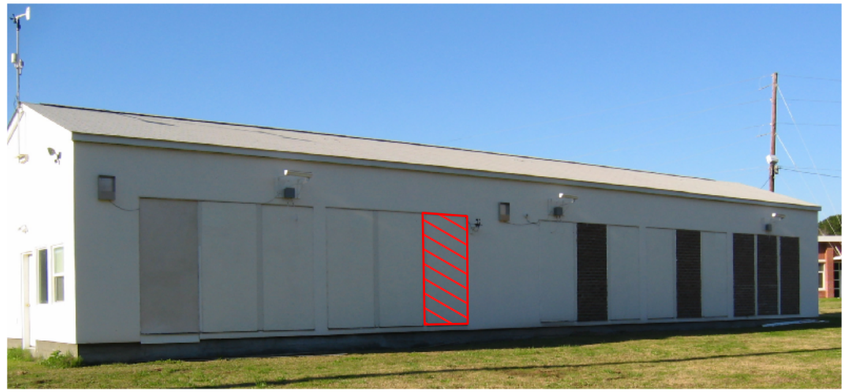

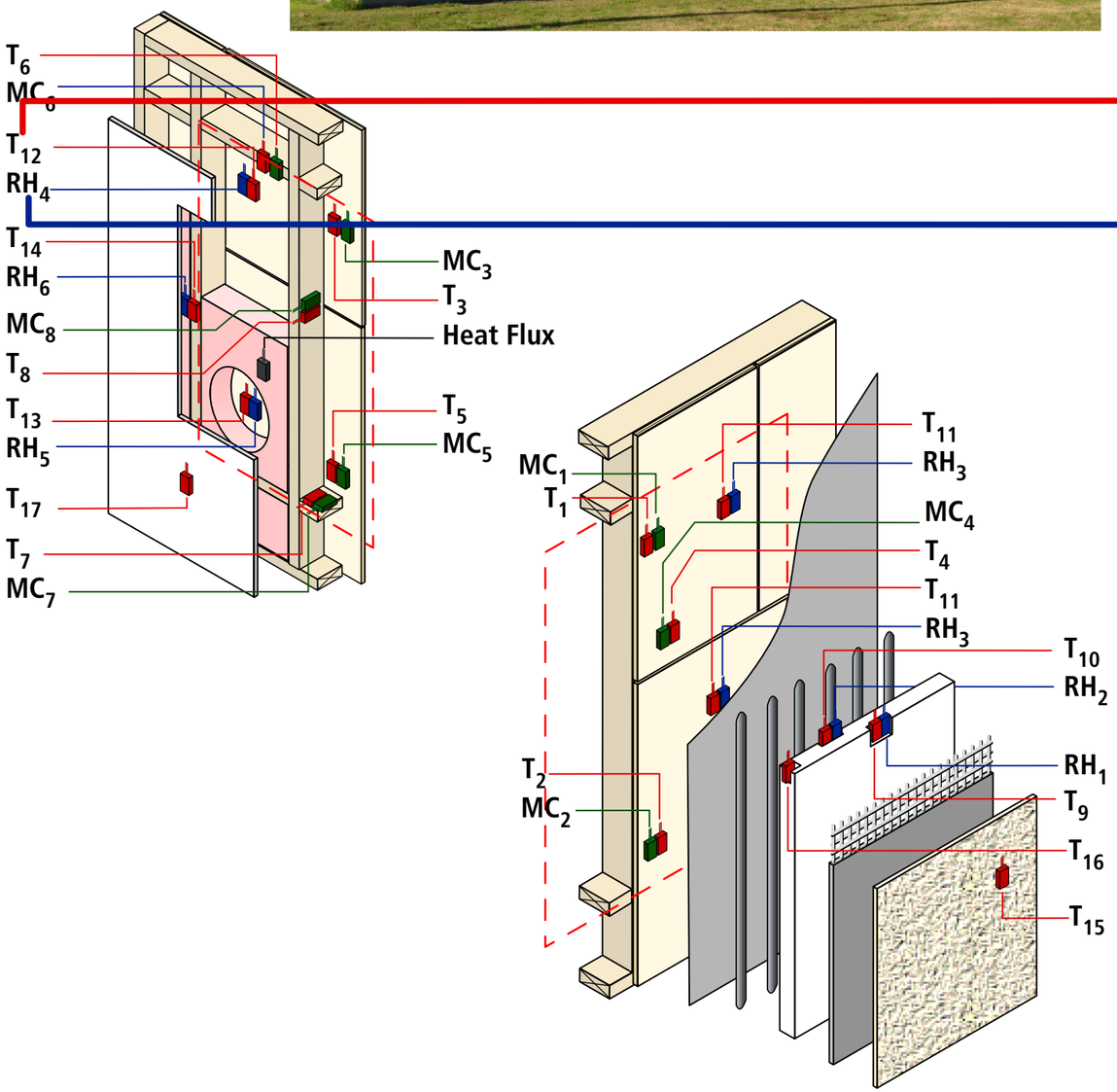
T_6
MC_6
T_{12}
RH_4
T_{14}
RH_6
MC_8
T_8
T_{13}
RH_5
T_{17}
T_7
MC_7
MC_3
T_3
Heat Flux
T_5
MC_5
MC_1
T_1
T_2
MC_2
T_{11}
RH_3
MC_4
T_4
T_{11}
RH_3
T_{10}
RH_2
RH_1
T_9
T_{16}
T_{15}

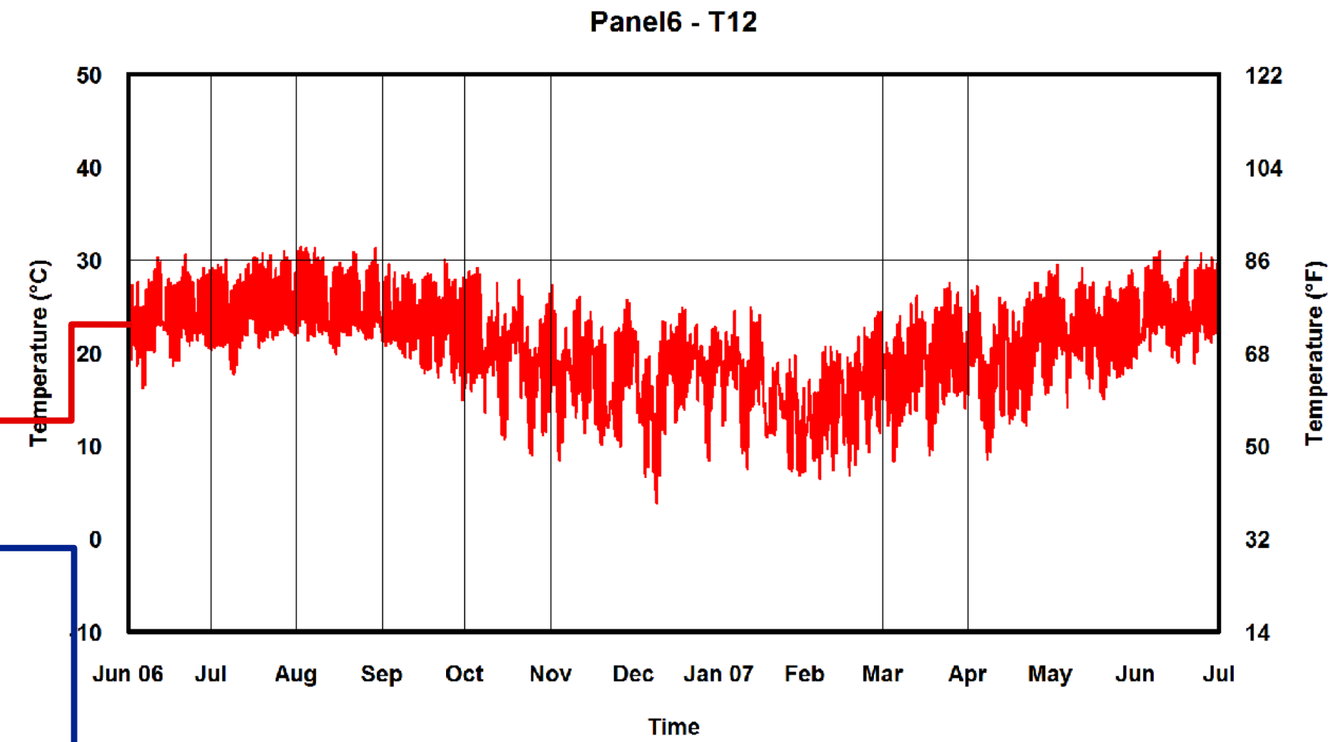
Panel6 - T12
Temperature (°C)
50
40
30
20
10
0
-10
Temperature (°F)
122
104
86
68
50
32
14
Jun 06
Jul
Aug
Sep
Oct
Nov
Dec
Jan 07
Feb
Mar
Apr
May
Jun
Jul
Time

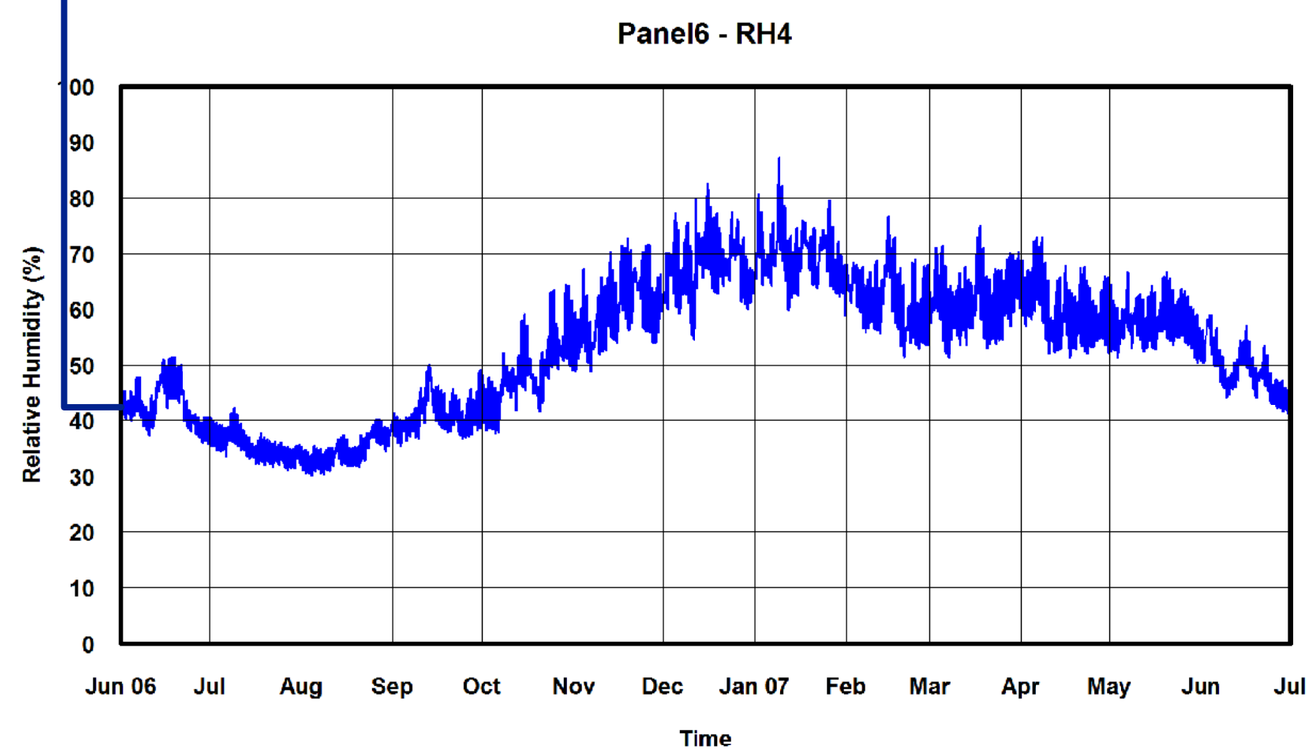
Panel6 - RH4
Relative Humidity (%)
100
90
80
70
60
50
40
30
20
10
0
Jun 06
Jul
Aug
Sep
Oct
Nov
Dec
Jan 07
Feb
Mar
Apr
May
Jun
Jul
Time

Panel 6

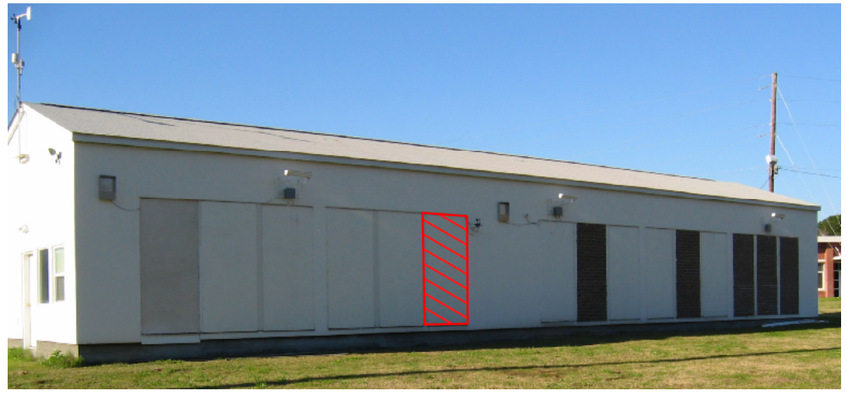

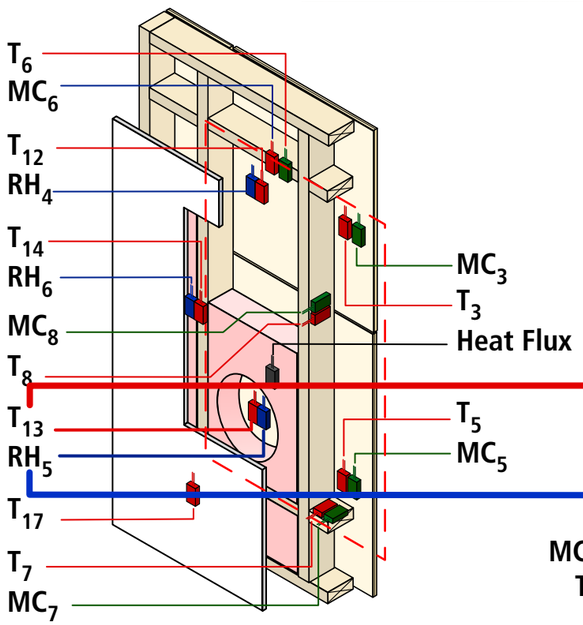
T_6
MC_6
T_{12}
RH_4
T_{14}
RH_6
MC_8
T_8
T_{13}
RH_5
T_{17}
T_7
MC_7
MC_3
T_3
Heat Flux
T_5
MC_5

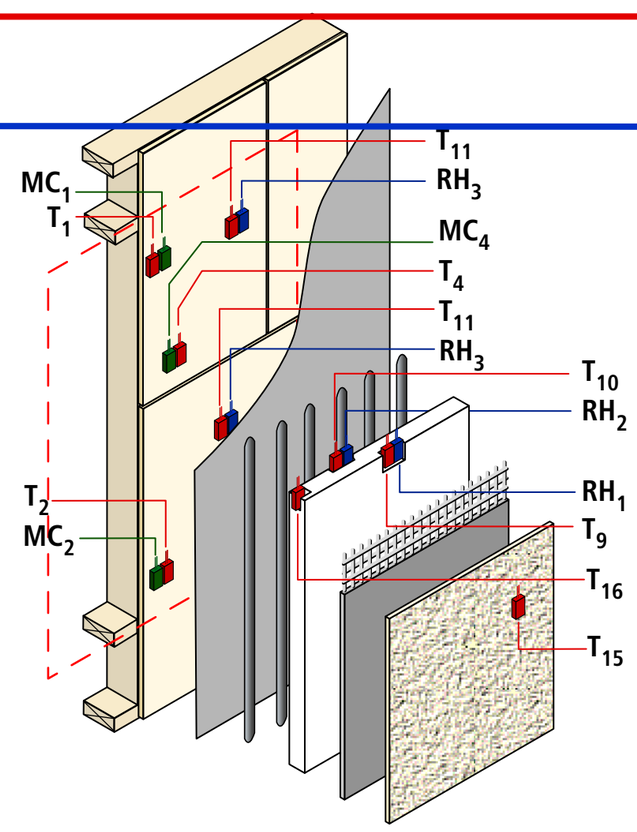
MC_1
T_1
T_2
MC_2
T_{11}
RH_3
MC_4
T_4
T_{11}
RH_3
T_{10}
RH_2
RH_1
T_9
T_{16}
T_{15}

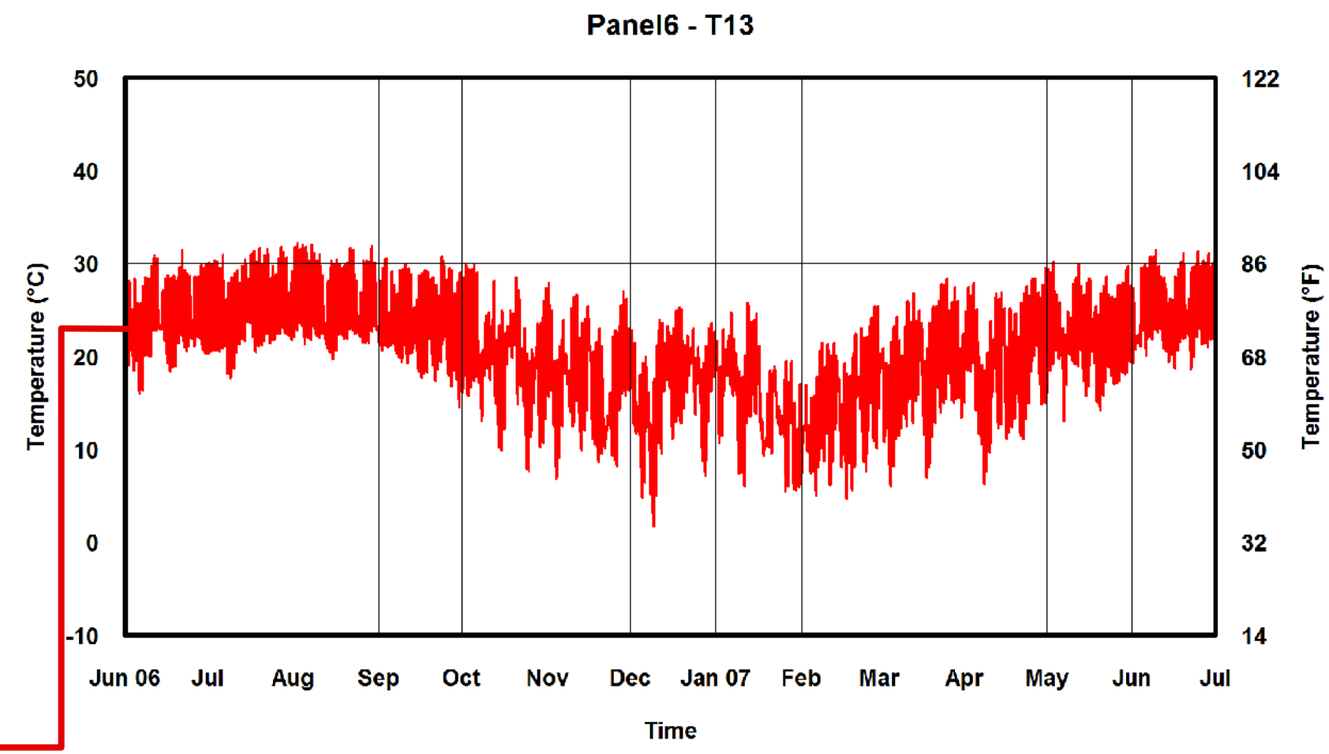
Panel6 - T13
Temperature (°C)
Temperature (°F)
50
40
30
20
10
0
-10
122
104
86
68
50
32
14
Jun 06
Jul
Aug
Sep
Oct
Nov
Dec
Jan 07
Feb
Mar
Apr
May
Jun
Jul
Time

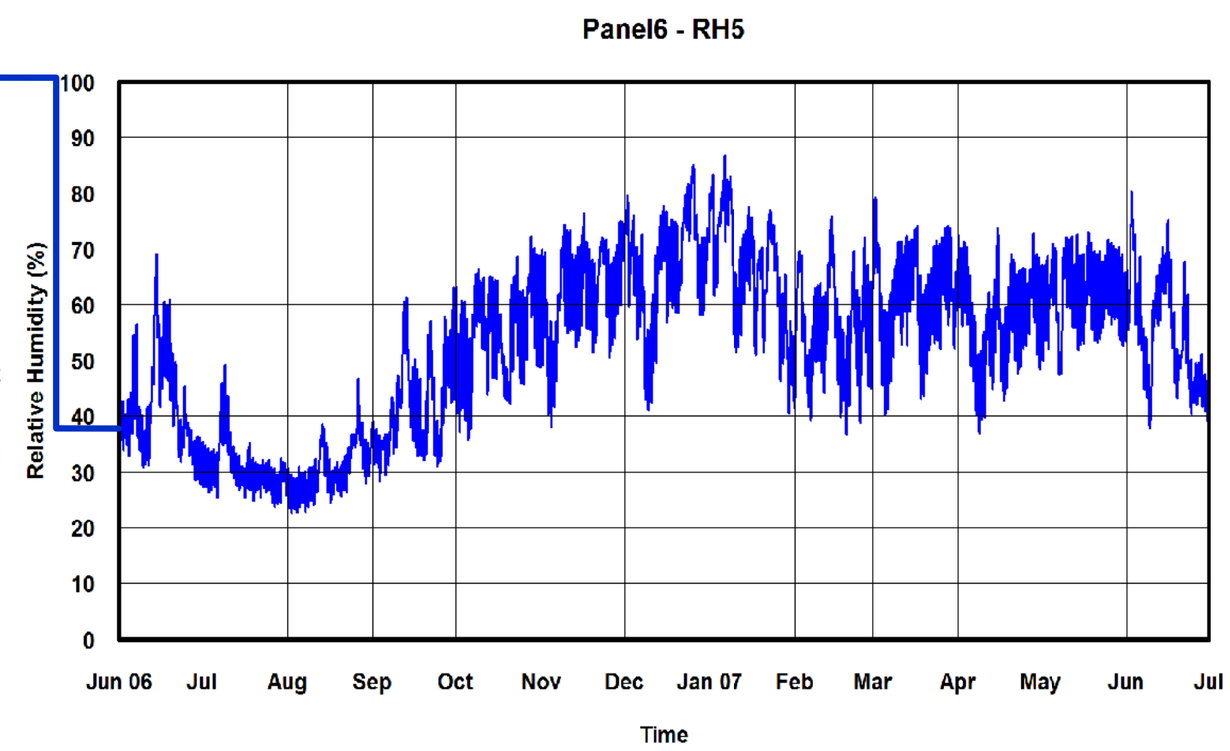
Panel6 - RH5
Relative Humidity (%)
100
90
80
70
60
50
40
30
20
10
0
Jun 06
Jul
Aug
Sep
Oct
Nov
Dec
Jan 07
Feb
Mar
Apr
May
Jun
Jul
Time

Panel 6

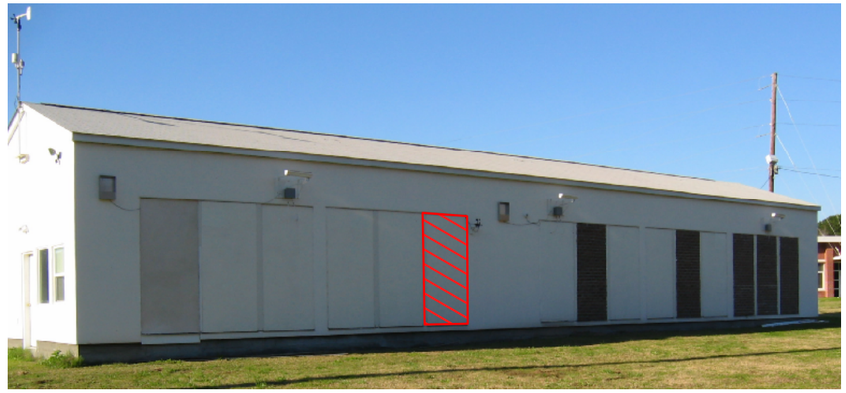

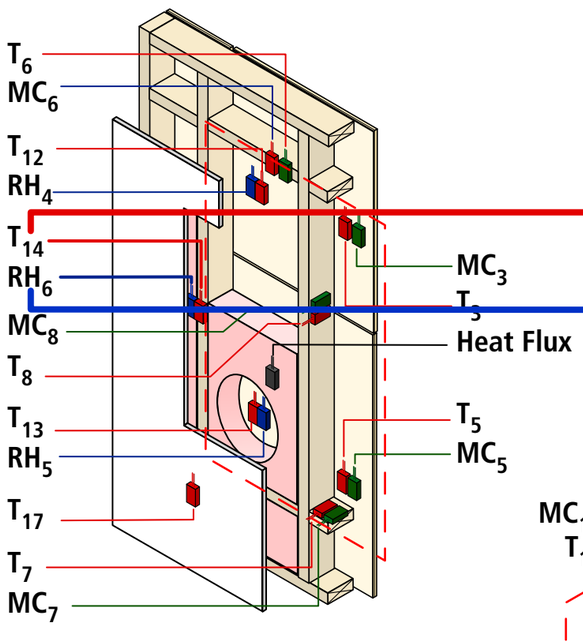
T_6
MC_6
T_{12}
RH_4
T_{14}
RH_6
MC_8
T_8
T_{13}
RH_5
T_{17}
T_7
MC_7
MC_3
T_3
Heat Flux
T_5
MC_5

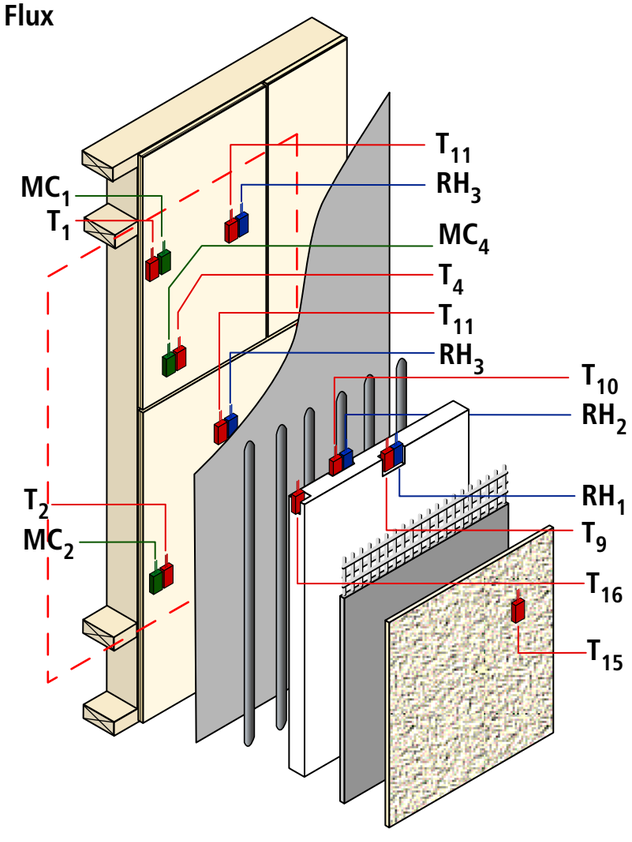
MC_1
T_1
T_2
MC_2
T_{11}
RH_3
MC_4
T_4
T_{11}
RH_3
T_{10}
RH_2
RH_1
T_9
T_{16}
T_{15}

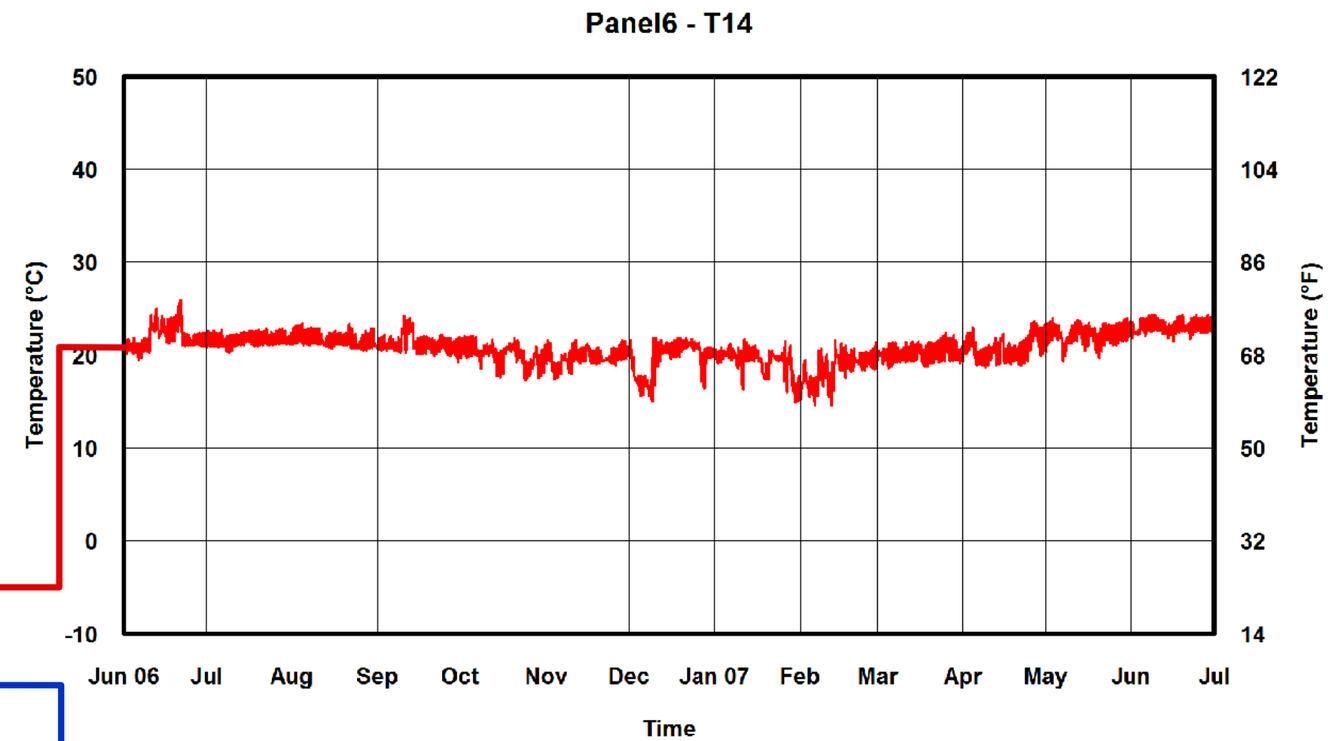
Panel6 - T14
Temperature (°C)
50
40
30
20
10
0
-10
Temperature (°F)
122
104
86
68
50
32
14
Jun 06
Jul
Aug
Sep
Oct
Nov
Dec
Jan 07
Feb
Mar
Apr
May
Jun
Jul
Time

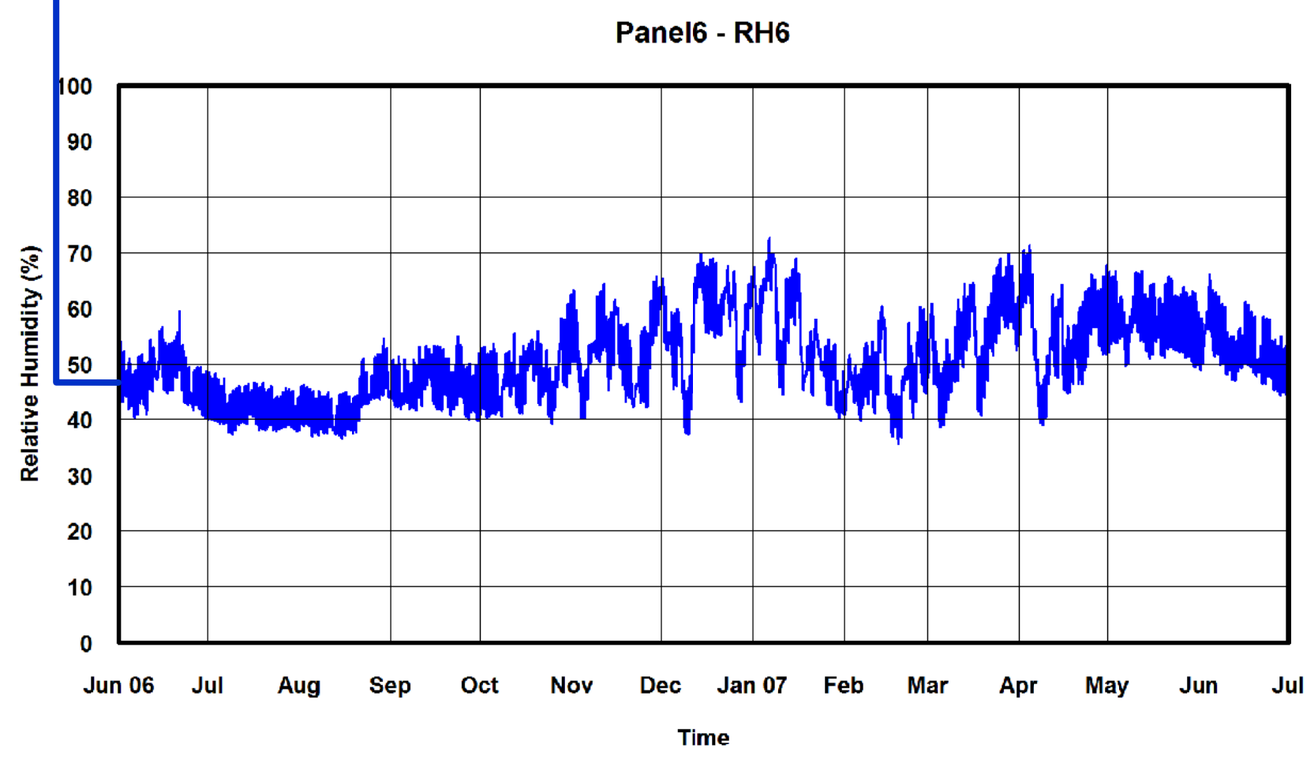
Panel6 - RH6
Relative Humidity (%)
100
90
80
70
60
50
40
30
20
10
0
Jun 06
Jul
Aug
Sep
Oct
Nov
Dec
Jan 07
Feb
Mar
Apr
May
Jun
Jul
Time

Panel 6

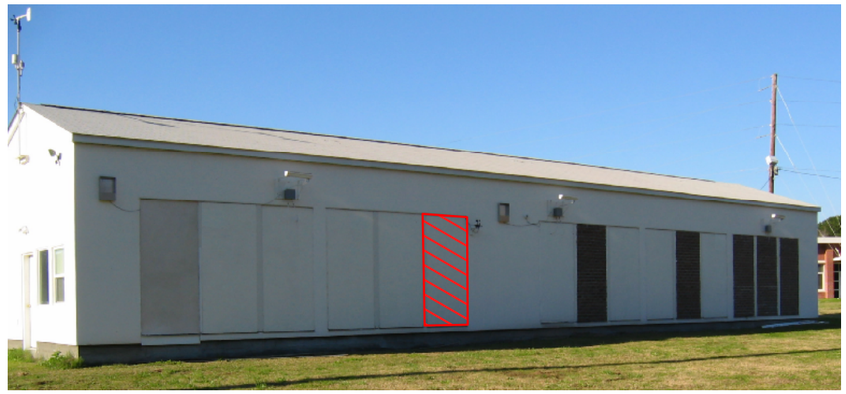

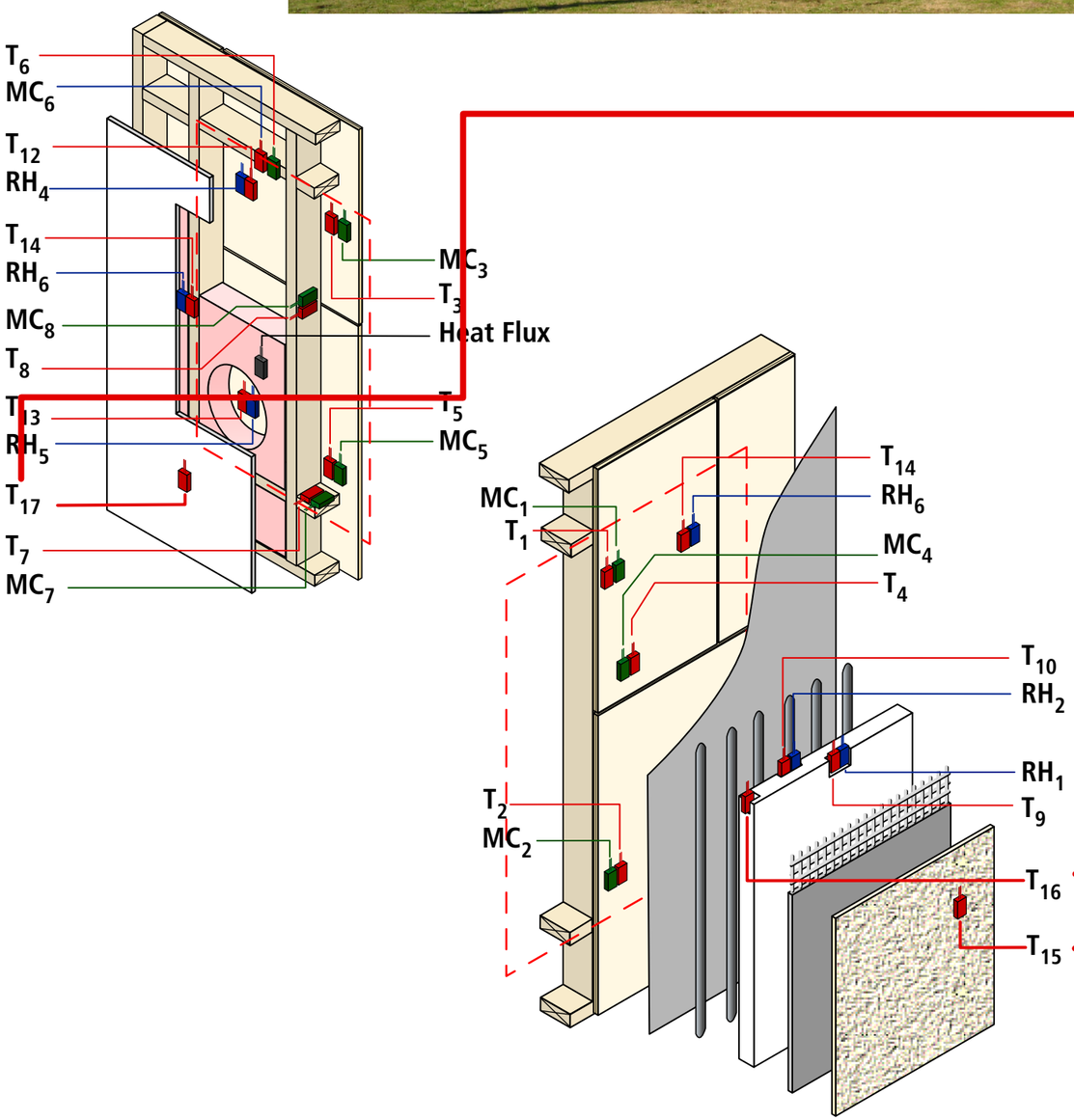
T_6
MC_6
T_{12}
RH_4
T_{14}
RH_6
MC_8
T_8
T_{13}
RH_5
T_{17}
T_7
MC_7
MC_3
T_3
Heat Flux
T_5
MC_5
MC_1
T_1
T_2
MC_2
T_{14}
RH_6
MC_4
T_4
T_{10}
RH_2
RH_1
T_9
T_{16}
T_{15}

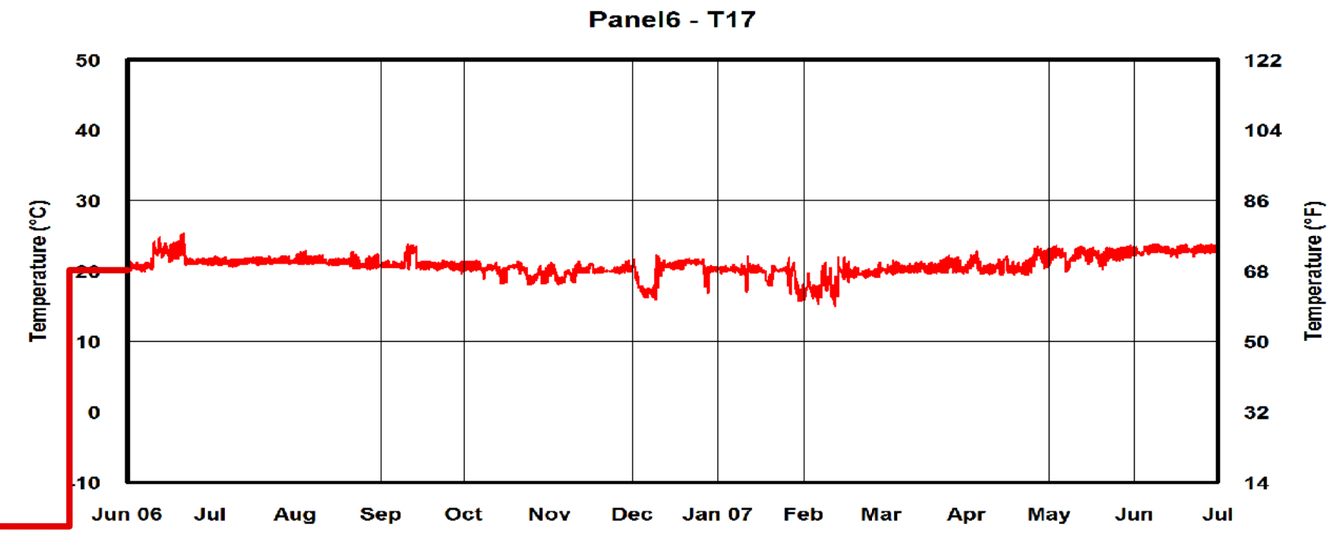
Panel6 - T17
Temperature (°C)
Temperature (°F)
50
40
30
20
10
0
-10
122
104
86
68
50
32
14
Jun 06
Jul
Aug
Sep
Oct
Nov
Dec
Jan 07
Feb
Mar
Apr
May
Jun
Jul

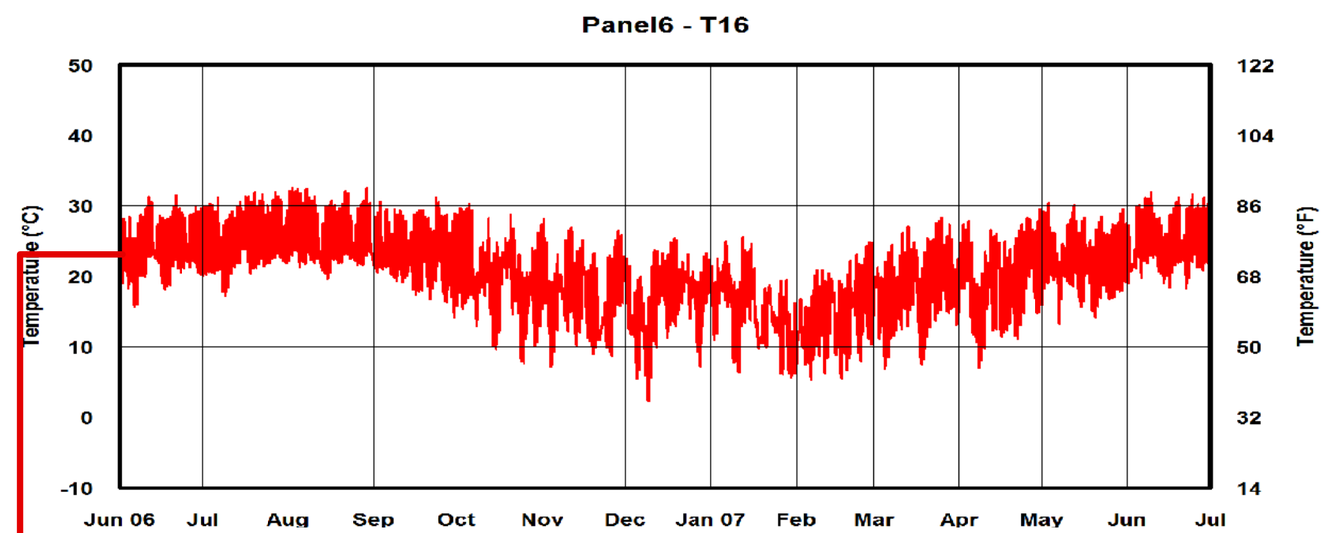
Panel6 - T16
Temperature (°C)
Temperature (°F)
50
40
30
20
10
0
-10
122
104
86
68
50
32
14
Jun 06
Jul
Aug
Sep
Oct
Nov
Dec
Jan 07
Feb
Mar
Apr
May
Jun
Jul

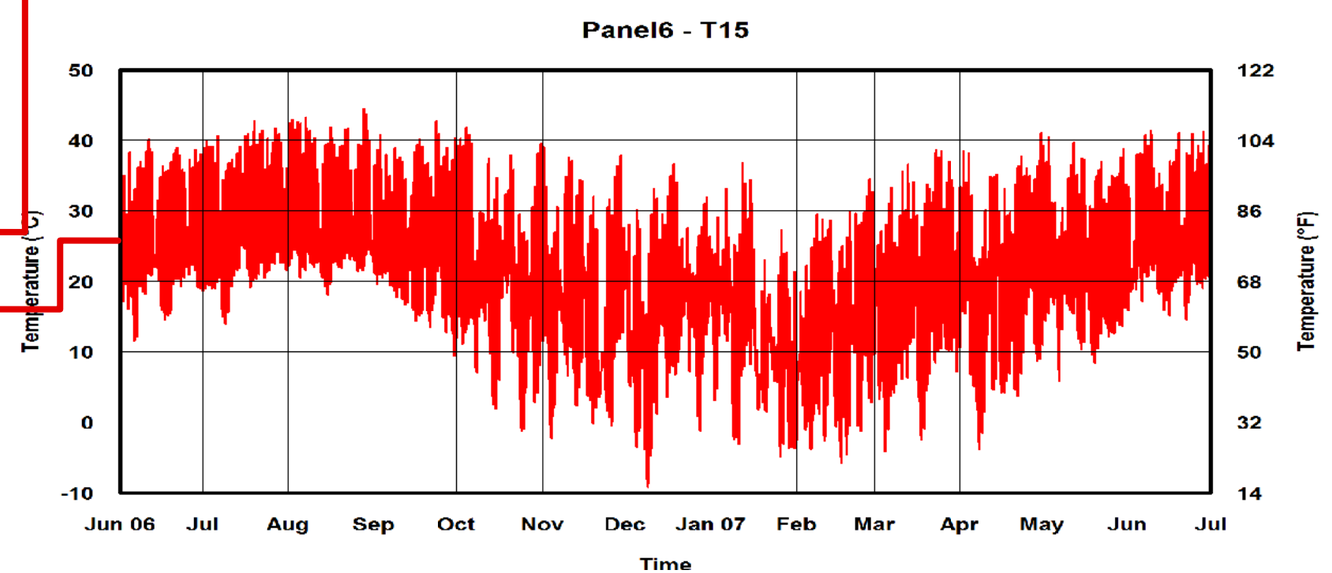
Panel6 - T15
Temperature (°C)
Temperature (°F)
50
40
30
20
10
0
-10
122
104
86
68
50
32
14
Jun 06
Jul
Aug
Sep
Oct
Nov
Dec
Jan 07
Feb
Mar
Apr
May
Jun
Jul
Time

Panel 6

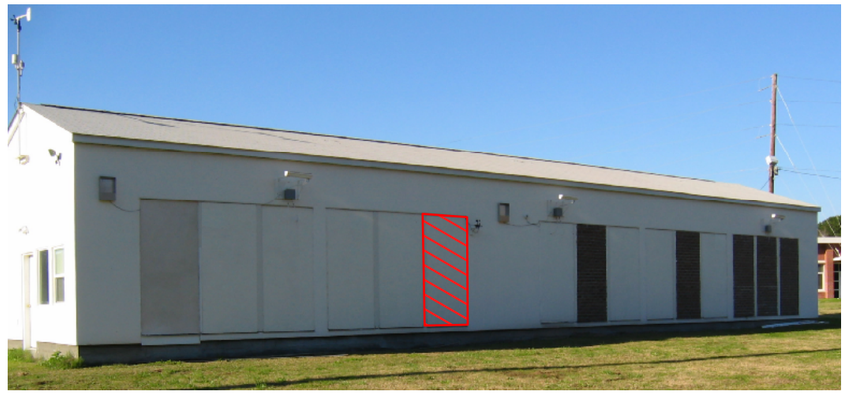

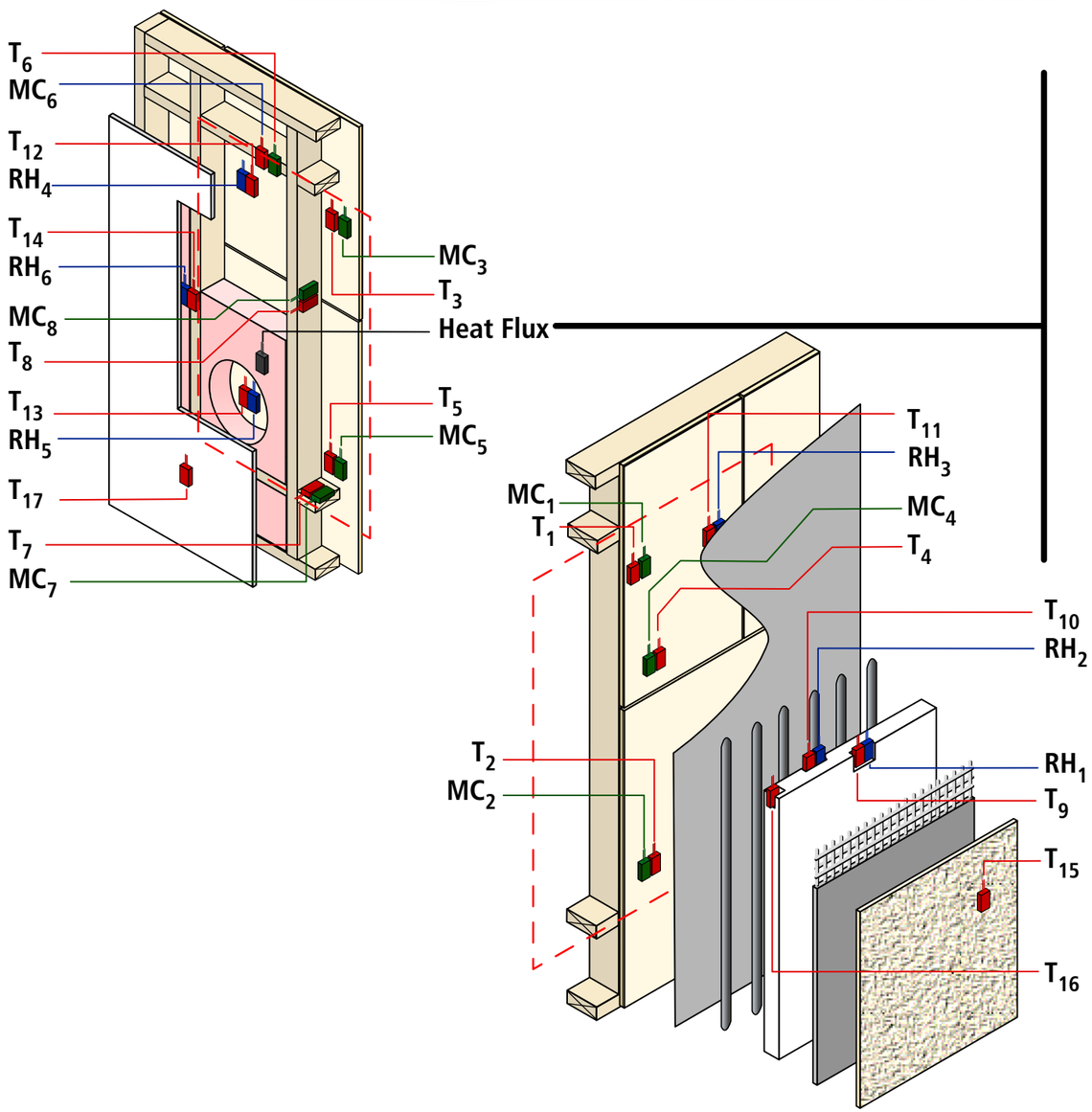
T_6
MC_6
T_{12}
RH_4
T_{14}
RH_6
MC_8
T_8
T_{13}
RH_5
T_{17}
T_7
MC_7
MC_3
T_3
Heat Flux
T_5
MC_5
T_{11}
RH_3
MC_1
T_1
MC_4
T_4
T_{10}
RH_2
T_2
MC_2
RH_1
T_9
T_{15}
T_{16}

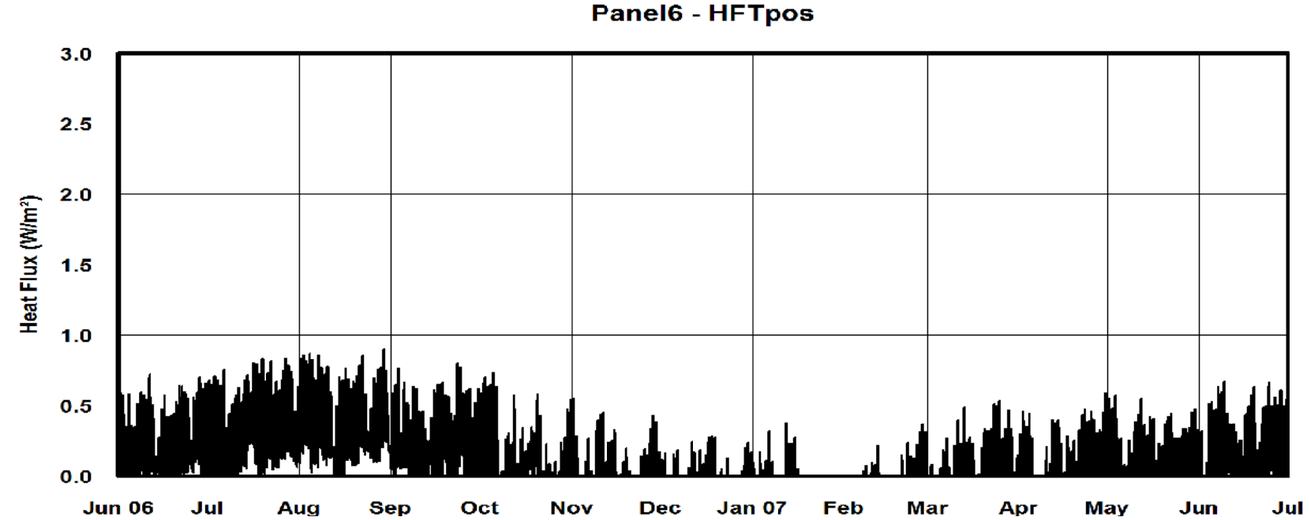
Panel6 - HFTpos
Heat Flux (W/m²)
3.0
2.5
2.0
1.5
1.0
0.5
0.0
Jun 06
Jul
Aug
Sep
Oct
Nov
Dec
Jan 07
Feb
Mar
Apr
May
Jun
Jul

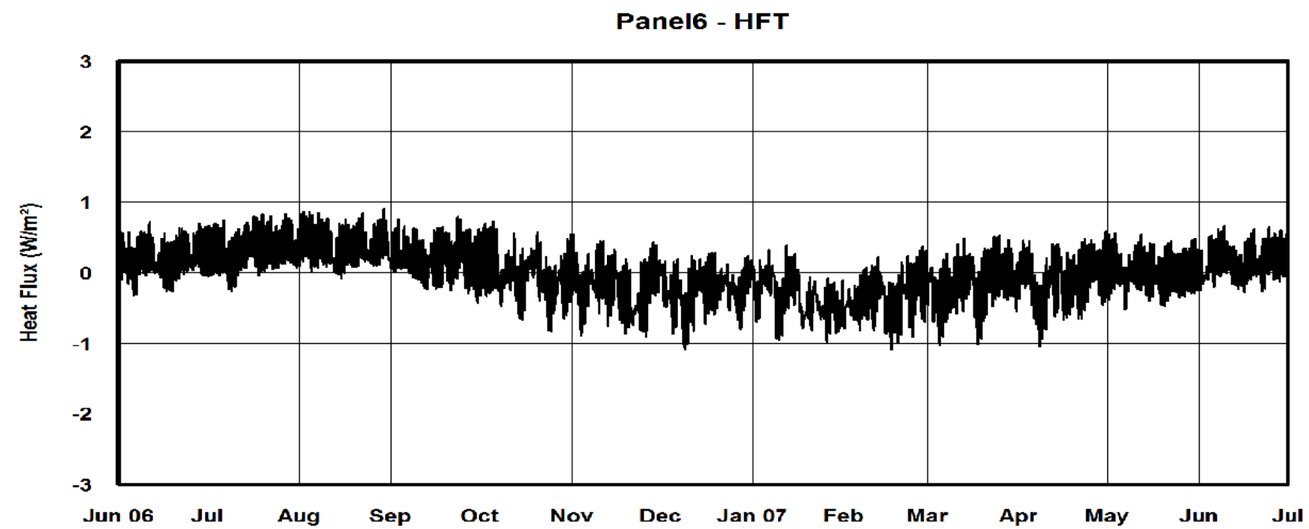
Panel6 - HFT
Heat Flux (W/m²)
3
2
1
0
-1
-2
-3
Jun 06
Jul
Aug
Sep
Oct
Nov
Dec
Jan 07
Feb
Mar
Apr
May
Jun
Jul

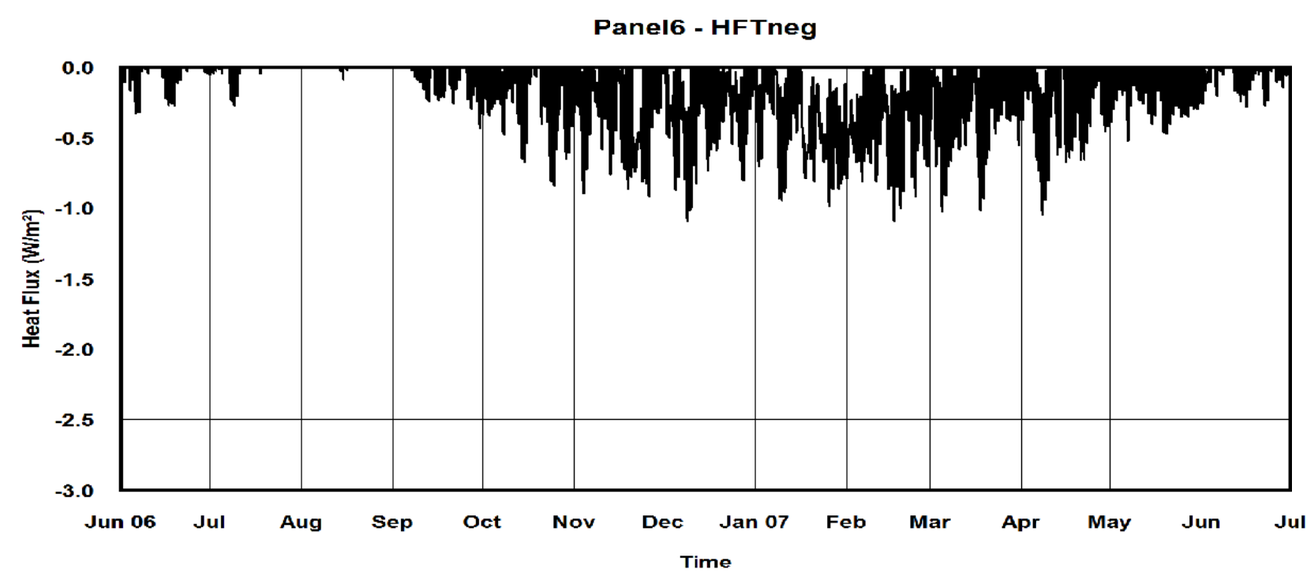
Panel6 - HFTneg
Heat Flux (W/m²)
0.0
-0.5
-1.0
-1.5
-2.0
-2.5
-3.0
Jun 06
Jul
Aug
Sep
Oct
Nov
Dec
Jan 07
Feb
Mar
Apr
May
Jun
Jul
Time

Panel 7

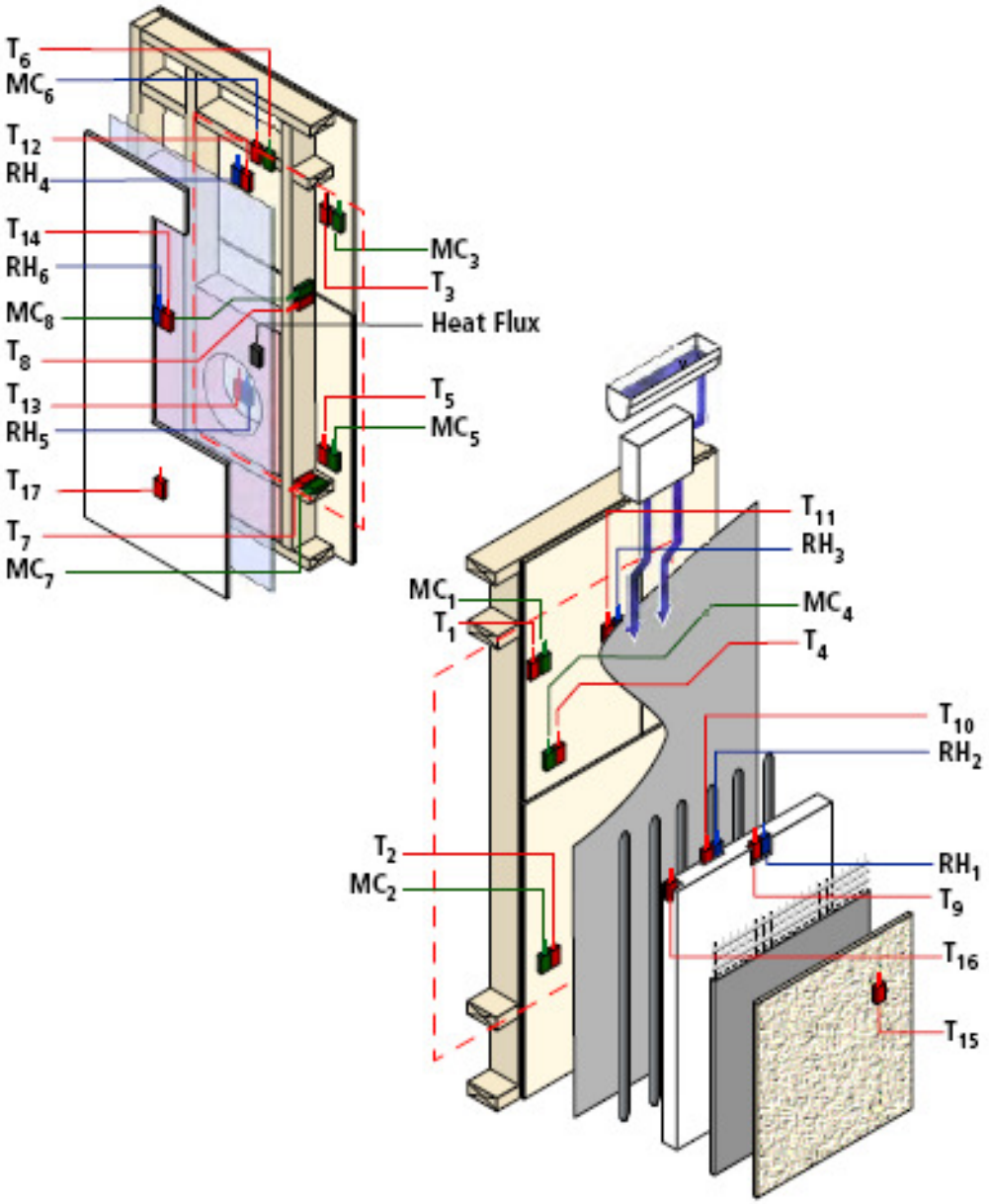
T_6
MC_6
T_{12}
RH_4
T_{14}
RH_6
MC_8
T_8
T_{13}
RH_5
T_{17}
T_7
MC_7
MC_3
T_3
Heat Flux
T_5
MC_5
T_{11}
RH_3
MC_1
T_1
MC_4
T_4
T_{10}
RH_2
T_2
MC_2
RH_1
T_9
T_{16}
T_{15}

Panel 7

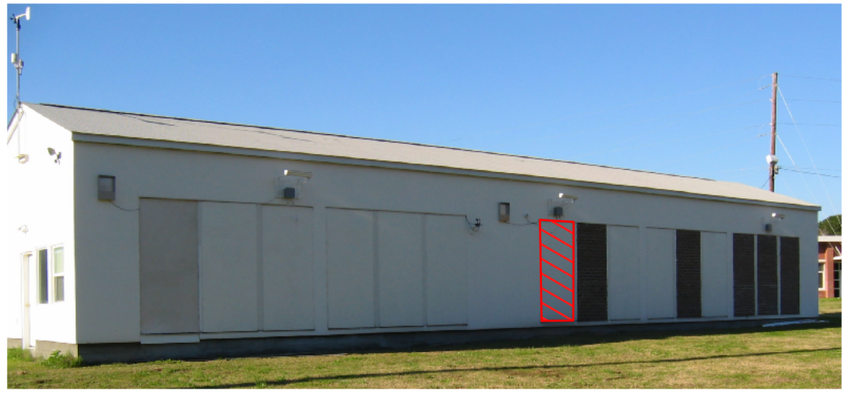

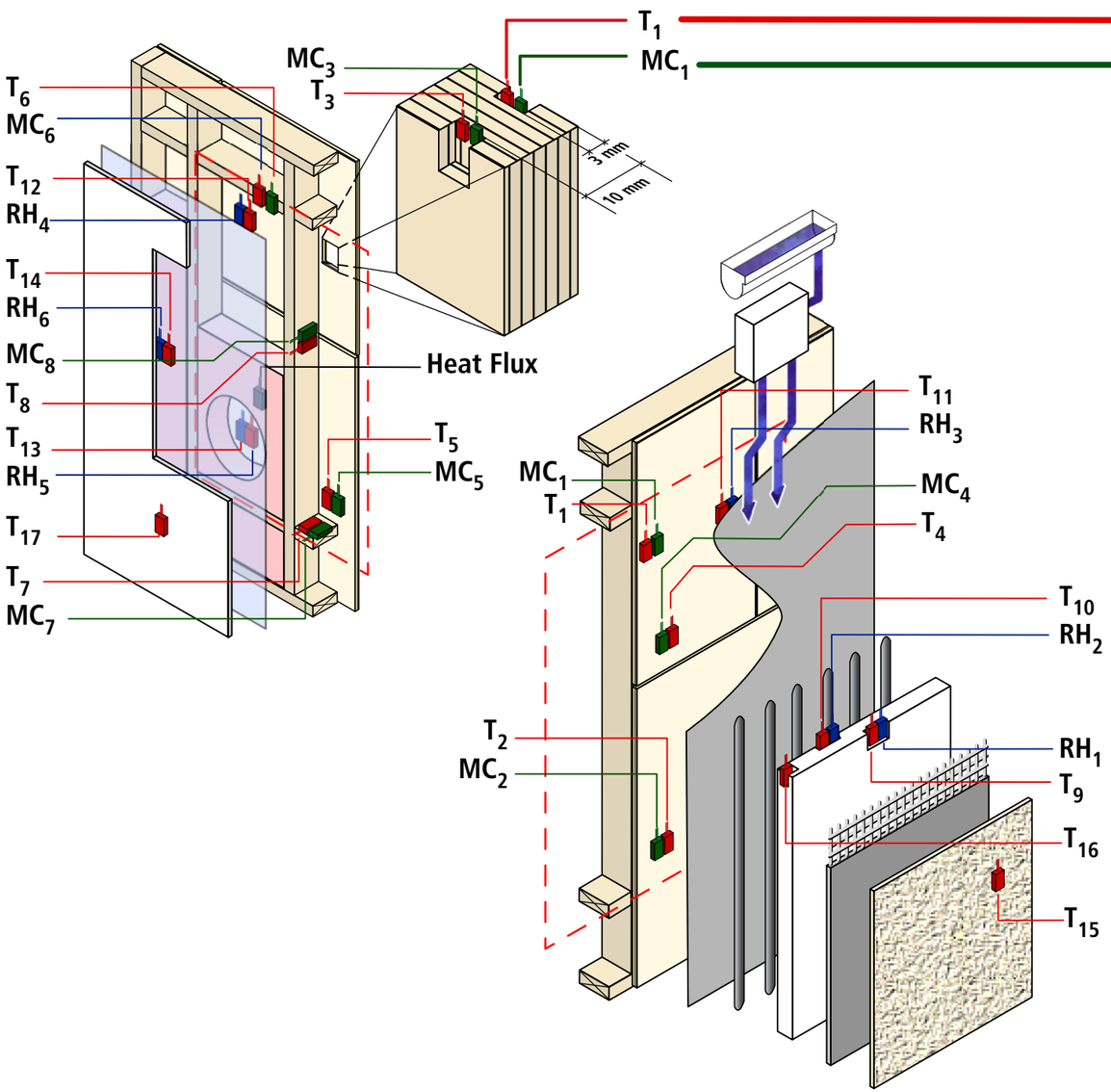
T1
MC1
MC3
T3
T6
MC6
T12
RH4
T14
RH6
MC8
T8
T13
RH5
T17
T7
MC7
3 mm
10 mm
Heat Flux
T5
MC5
T11
RH3
MC4
T4
T10
RH2
RH1
T9
T16
T15
T2
MC2

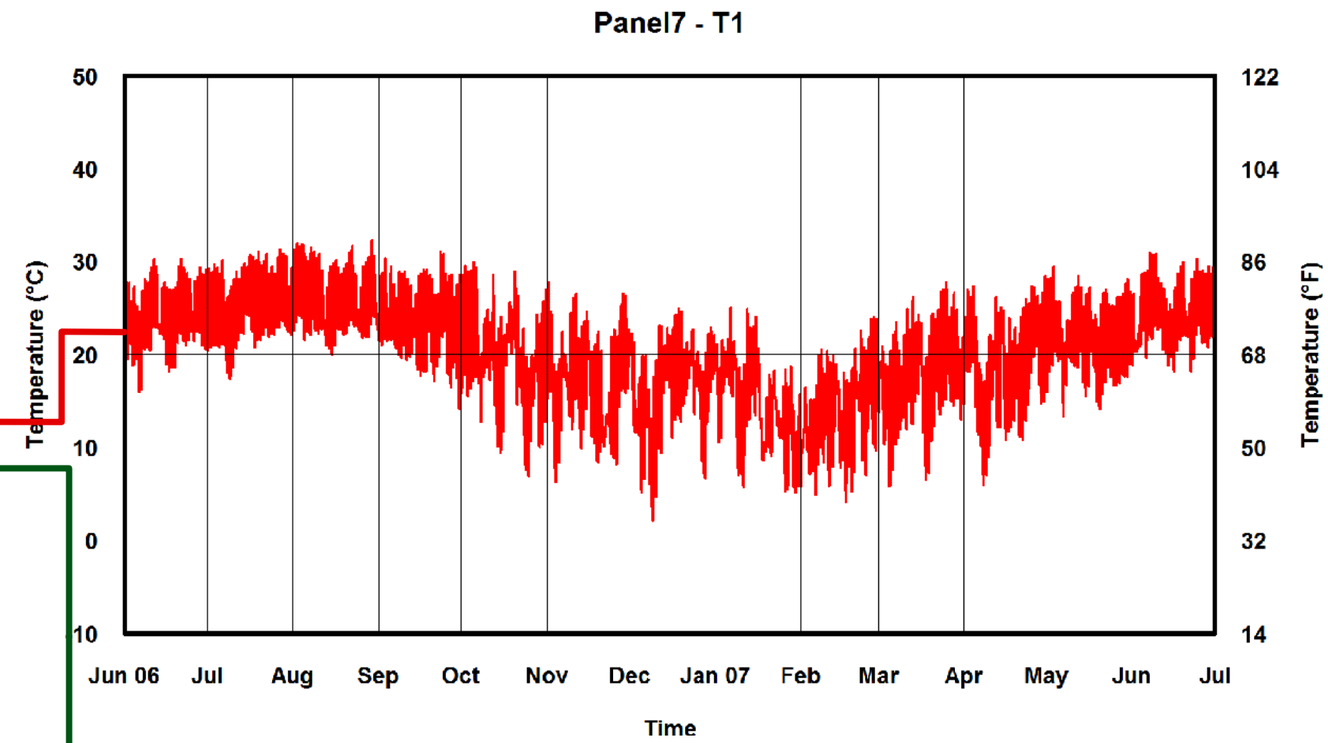
Panel7 - T1
Temperature (°C)
Temperature (°F)
50
40
30
20
10
0
-10
122
104
86
68
50
32
14
Jun 06
Jul
Aug
Sep
Oct
Nov
Dec
Jan 07
Feb
Mar
Apr
May
Jun
Jul
Time

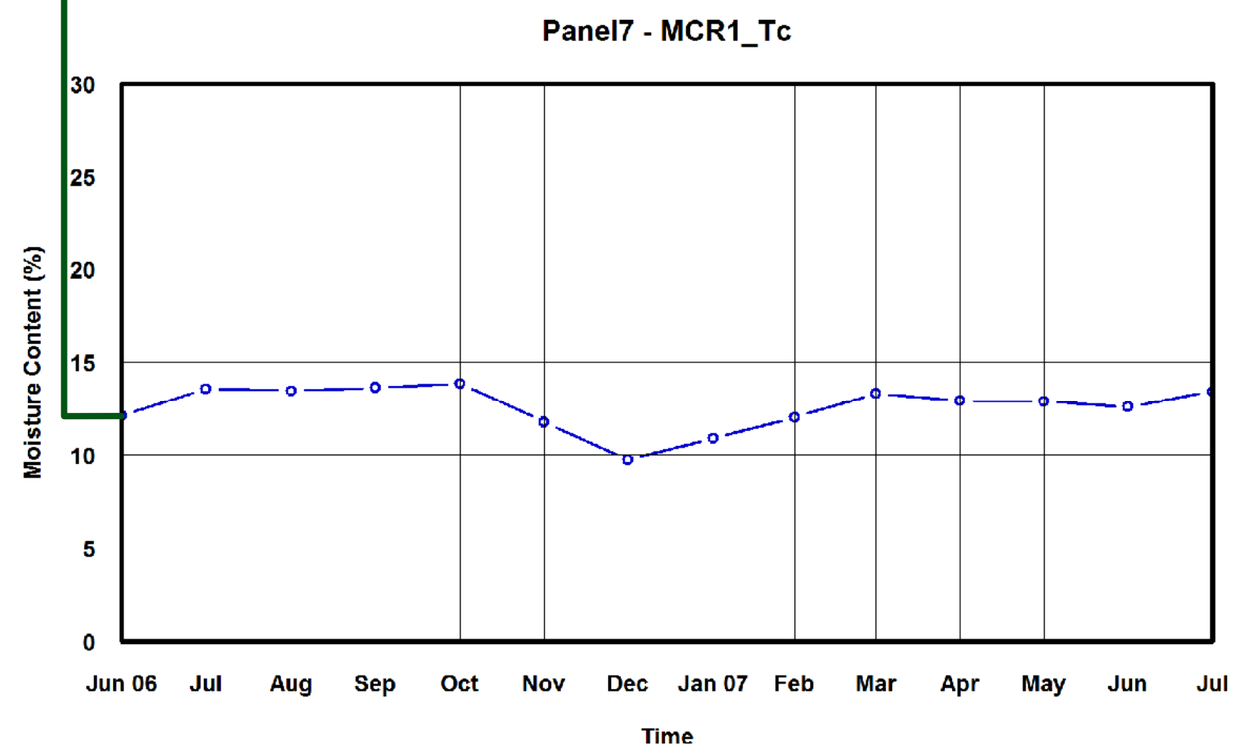
Panel7 - MCR1_Tc
Moisture Content (%)
30
25
20
15
10
5
0
Jun 06
Jul
Aug
Sep
Oct
Nov
Dec
Jan 07
Feb
Mar
Apr
May
Jun
Jul
Time

Panel 7

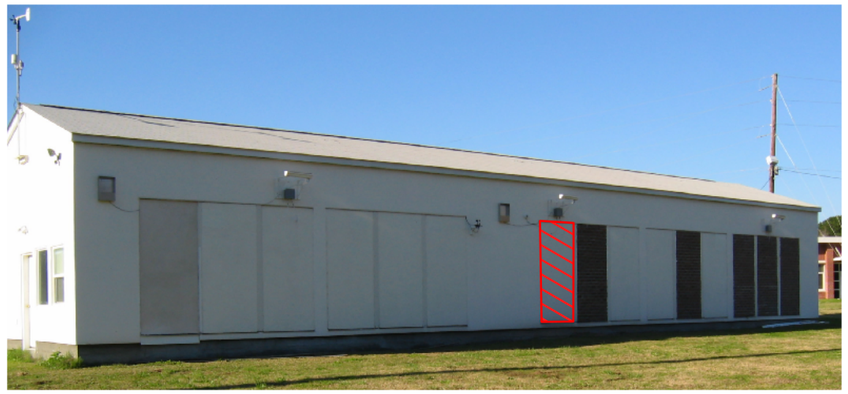

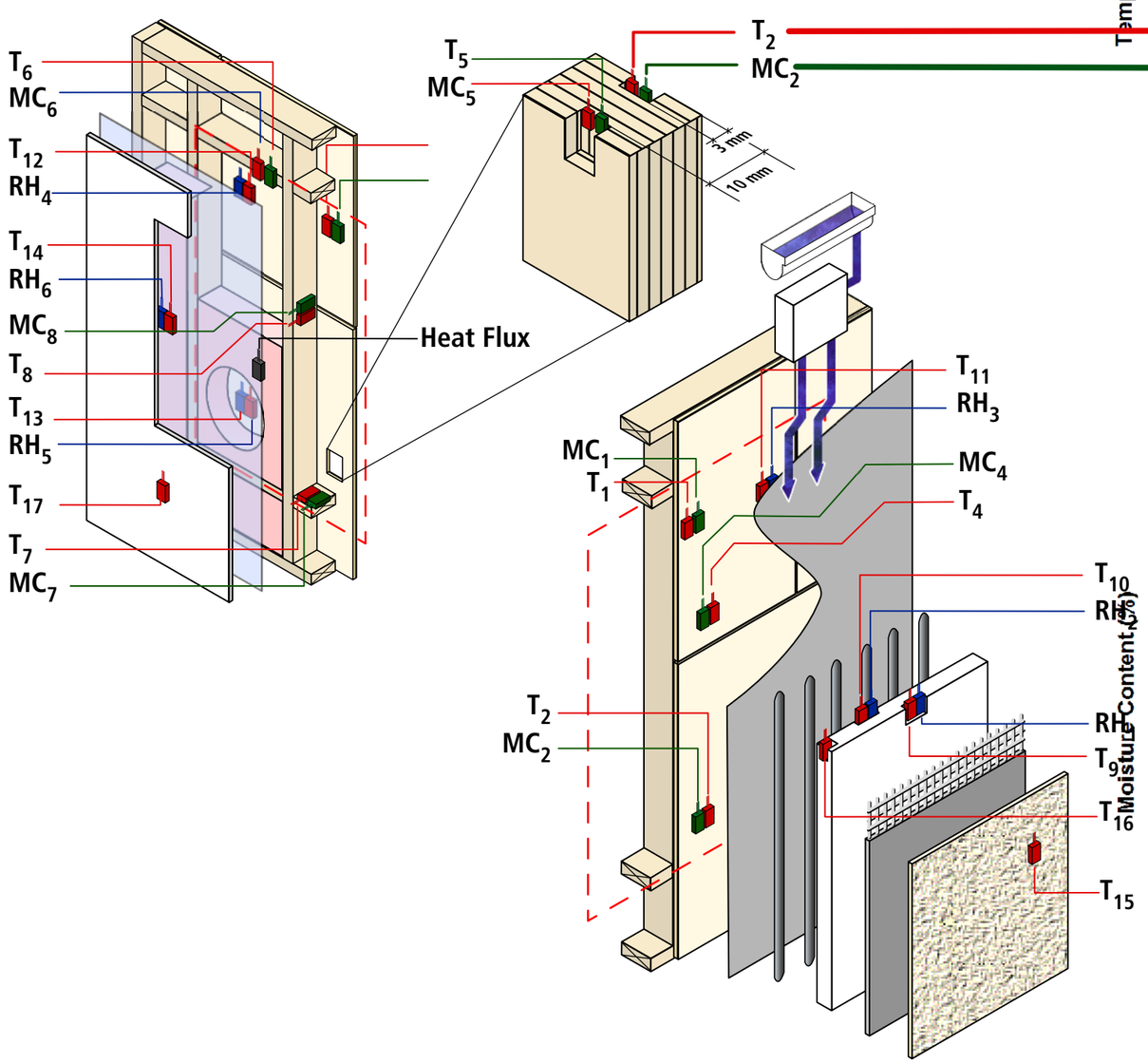
T_6
MC_6
T_{12}
RH_4
T_{14}
RH_6
MC_8
T_8
T_{13}
RH_5
T_{17}
T_7
MC_7
Heat Flux
T_5
MC_5
T_2
MC_2
3 mm
10 mm
T_{11}
RH_3
MC_4
T_4
MC_1
T_1
T_{10}
RH_2
T_2
MC_2
RH_1
T_9
T_{16}
T_{15}

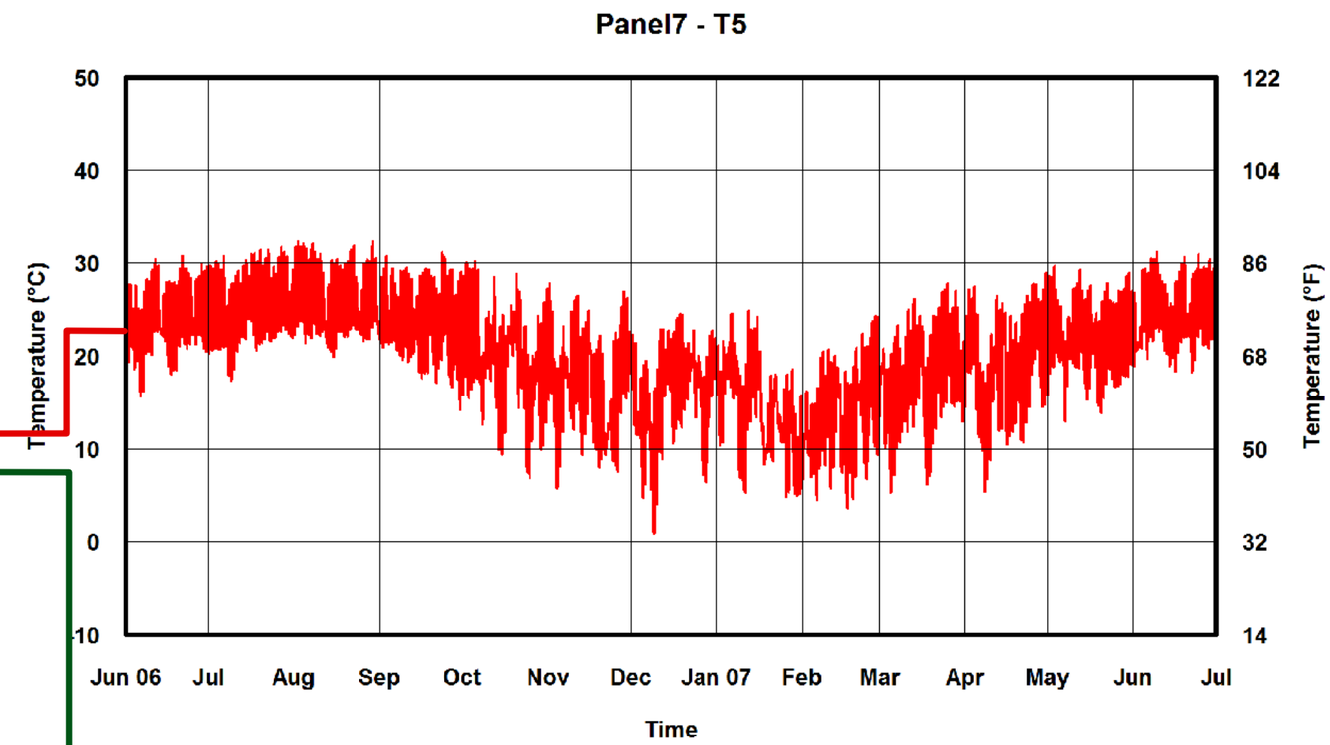
Panel7 - T5
Temperature (°C)
Temperature (°F)
50
40
30
20
10
0
-10
122
104
86
68
50
32
14
Jun 06
Jul
Aug
Sep
Oct
Nov
Dec
Jan 07
Feb
Mar
Apr
May
Jun
Jul
Time

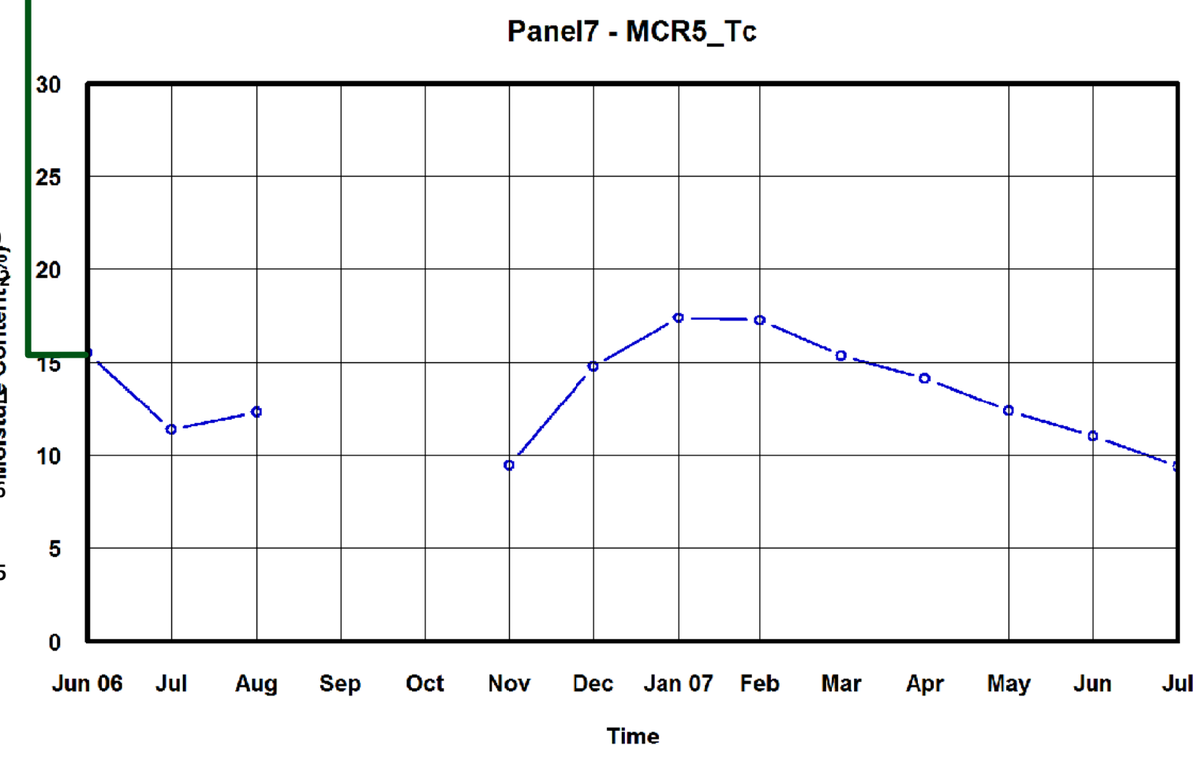
Panel7 - MCR5_Tc
Moisture Content (%)
30
25
20
15
10
5
0
Jun 06
Jul
Aug
Sep
Oct
Nov
Dec
Jan 07
Feb
Mar
Apr
May
Jun
Jul
Time

Panel 7

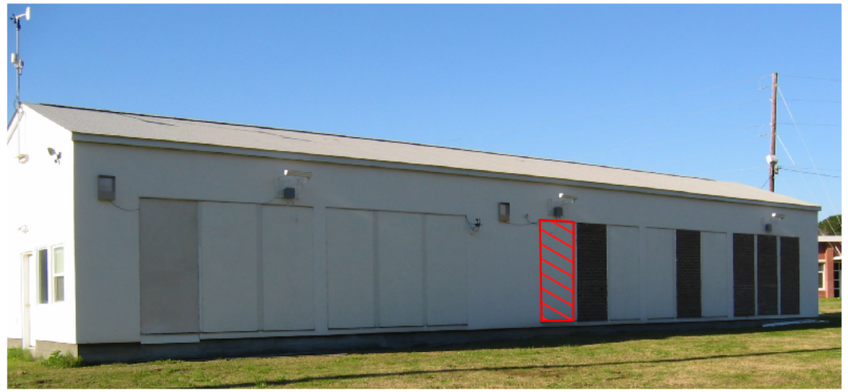

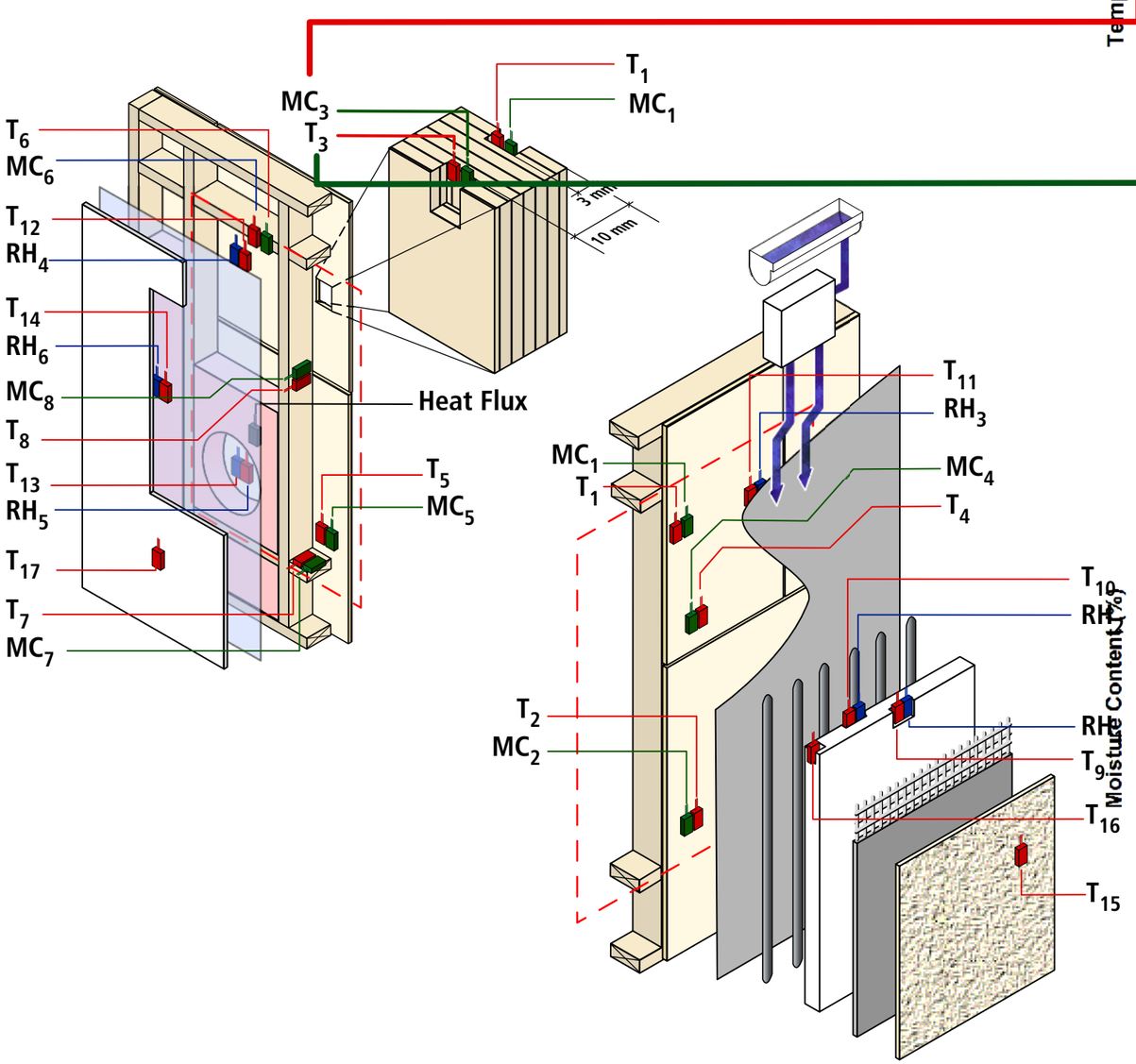
T_6
MC_6
T_{12}
RH_4
T_{14}
RH_6
MC_8
T_8
T_{13}
RH_5
T_{17}
T_7
MC_7
MC_3
T_3
T_1
MC_1
3 mm
10 mm
Heat Flux
T_5
MC_5
MC_1
T_1
T_{11}
RH_3
MC_4
T_4
T_{10}
RH_1
RH_2
T_9
T_{16}
T_{15}
T_2
MC_2

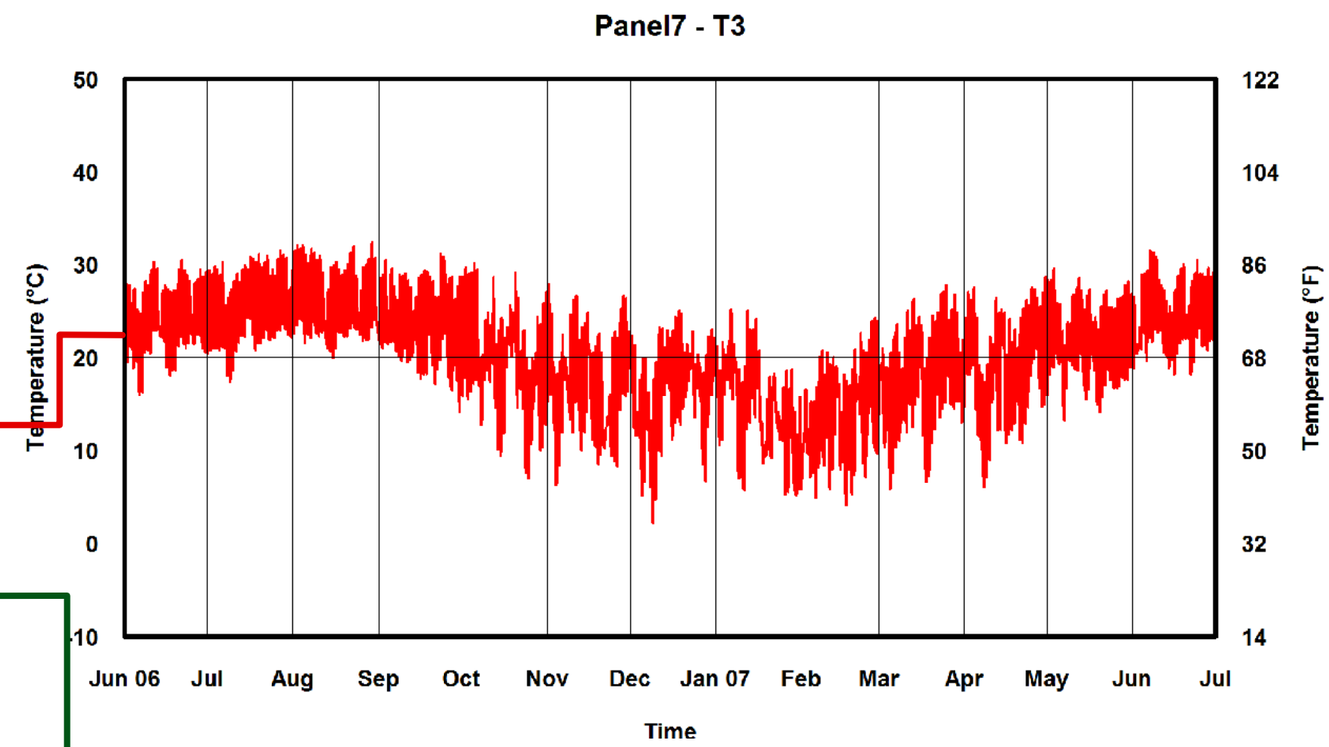
Panel7 - T3
Temperature (°C)
Temperature (°F)
50
40
30
20
10
0
-10
122
104
86
68
50
32
14
Jun 06
Jul
Aug
Sep
Oct
Nov
Dec
Jan 07
Feb
Mar
Apr
May
Jun
Jul
Time

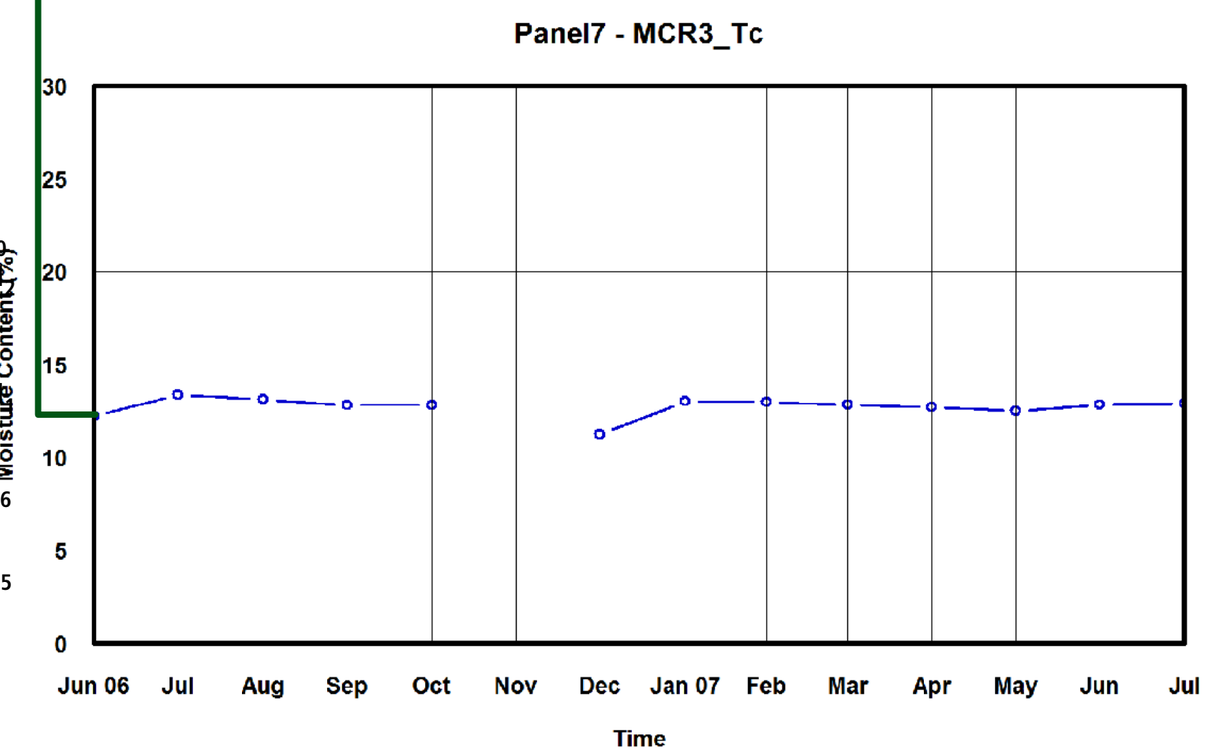
Panel7 - MCR3_Tc
Moisture Content (%)
30
25
20
15
10
5
0
Jun 06
Jul
Aug
Sep
Oct
Nov
Dec
Jan 07
Feb
Mar
Apr
May
Jun
Jul
Time

Panel 7

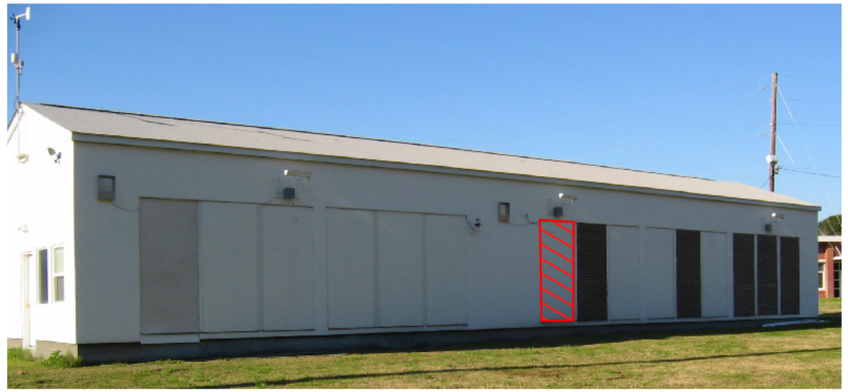

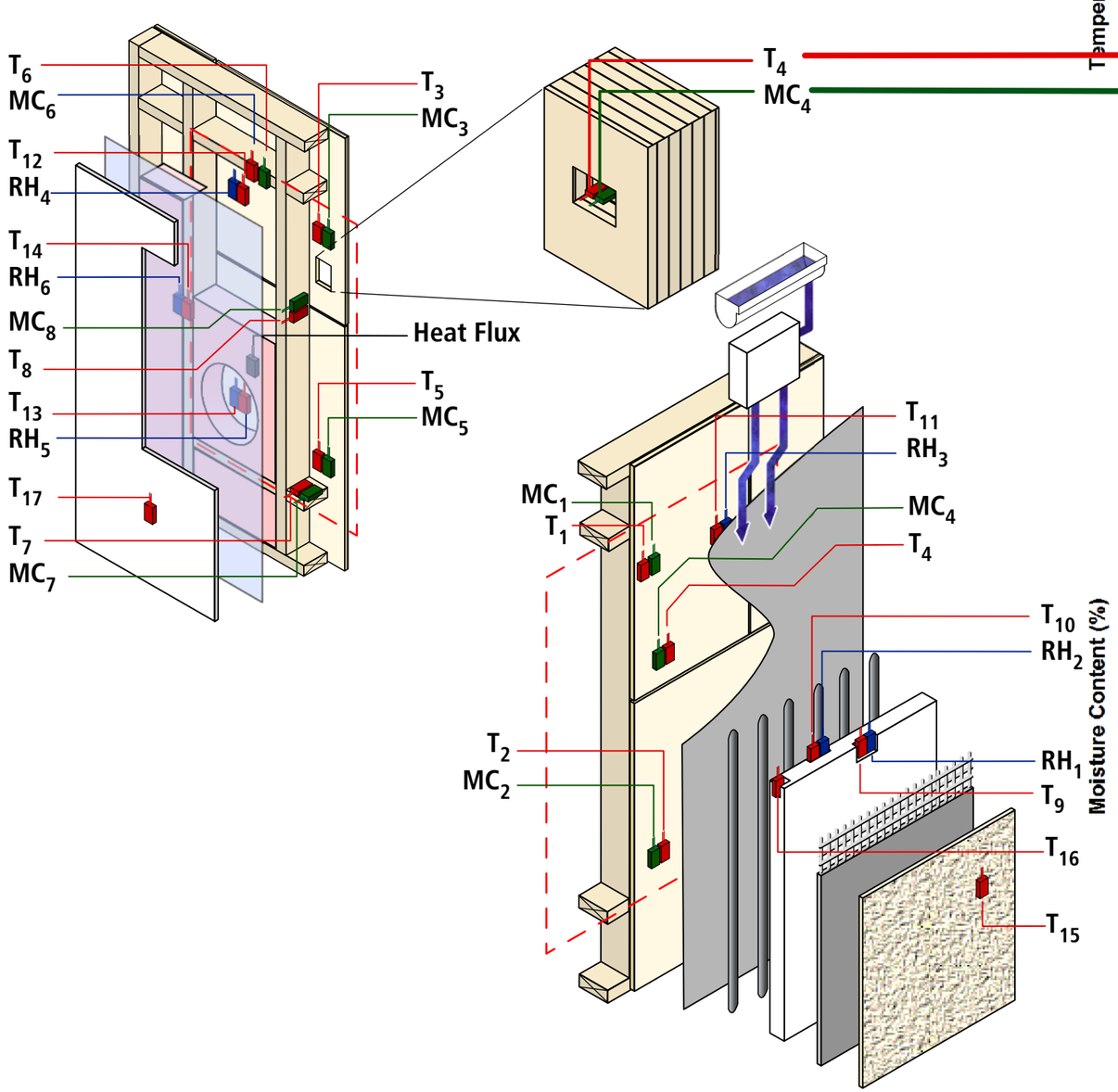
T_6
MC_6
T_{12}
RH_4
T_{14}
RH_6
MC_8
T_8
T_{13}
RH_5
T_{17}
T_7
MC_7
T_3
MC_3
Heat Flux
T_5
MC_5
T_4
MC_4
T_{11}
RH_3
MC_1
T_1
MC_4
T_4
T_{10}
RH_2
T_2
MC_2
RH_1
T_9
T_{16}
T_{15}

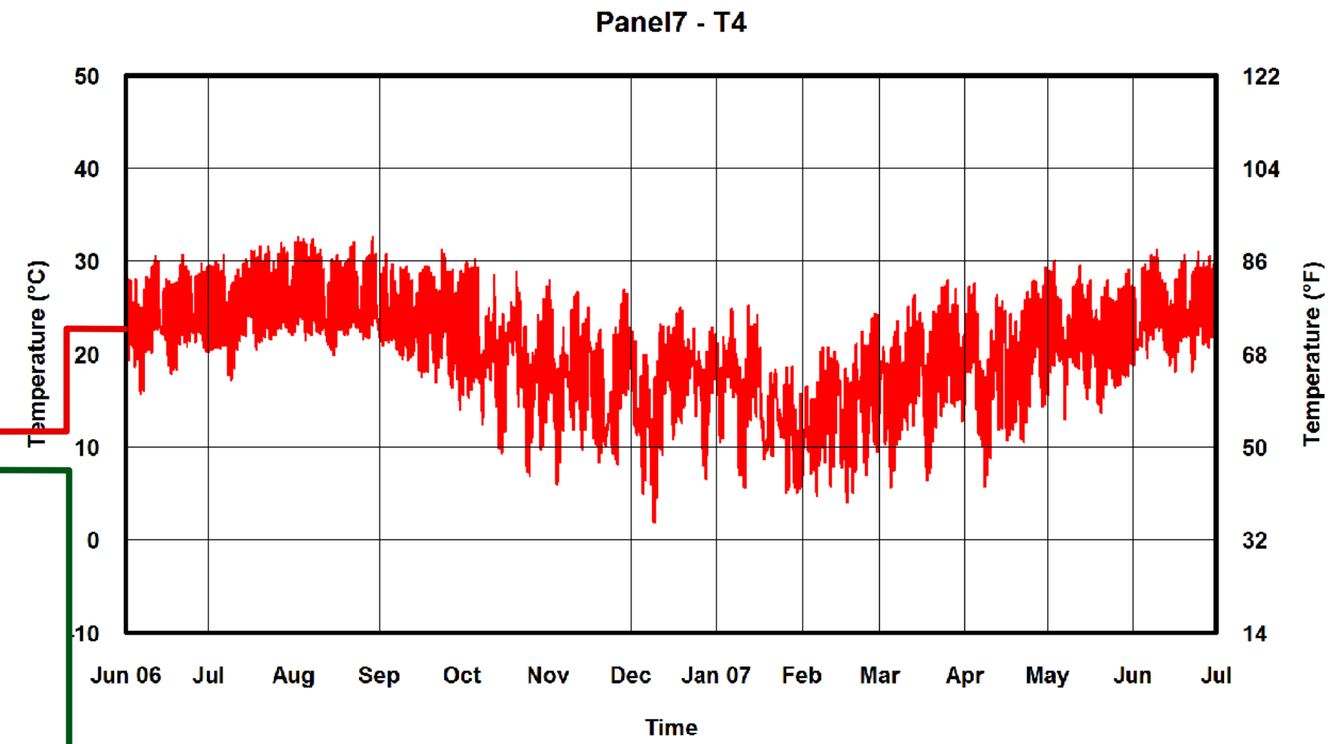
Panel7 - T4
Temperature (°C)
50
40
30
20
10
0
-10
Temperature (°F)
122
104
86
68
50
32
14
Jun 06
Jul
Aug
Sep
Oct
Nov
Dec
Jan 07
Feb
Mar
Apr
May
Jun
Jul
Time

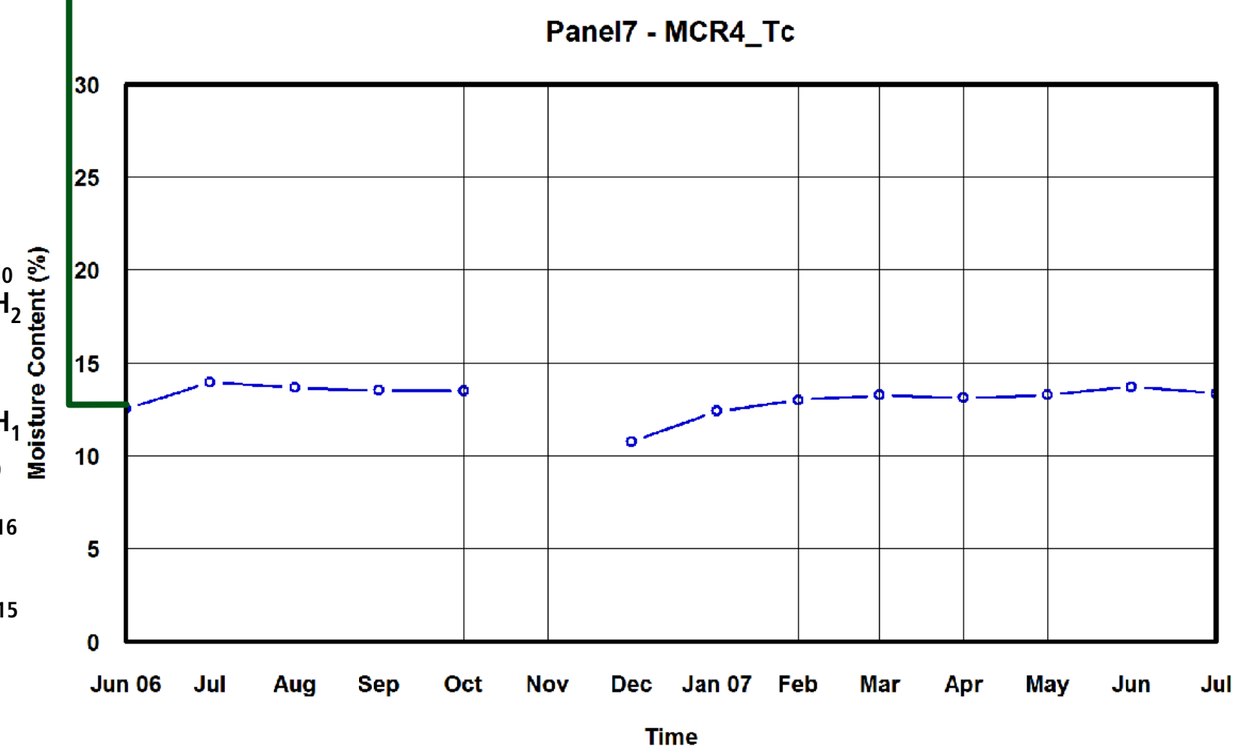
Panel7 - MCR4_Tc
Moisture Content (%)
30
25
20
15
10
5
0
Jun 06
Jul
Aug
Sep
Oct
Nov
Dec
Jan 07
Feb
Mar
Apr
May
Jun
Jul
Time

Panel 7

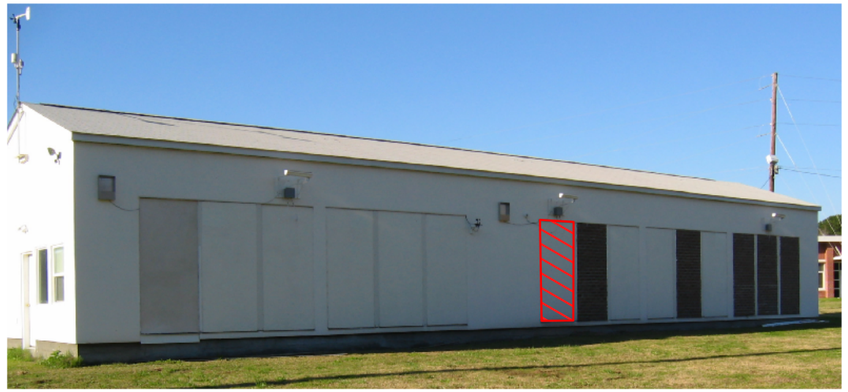

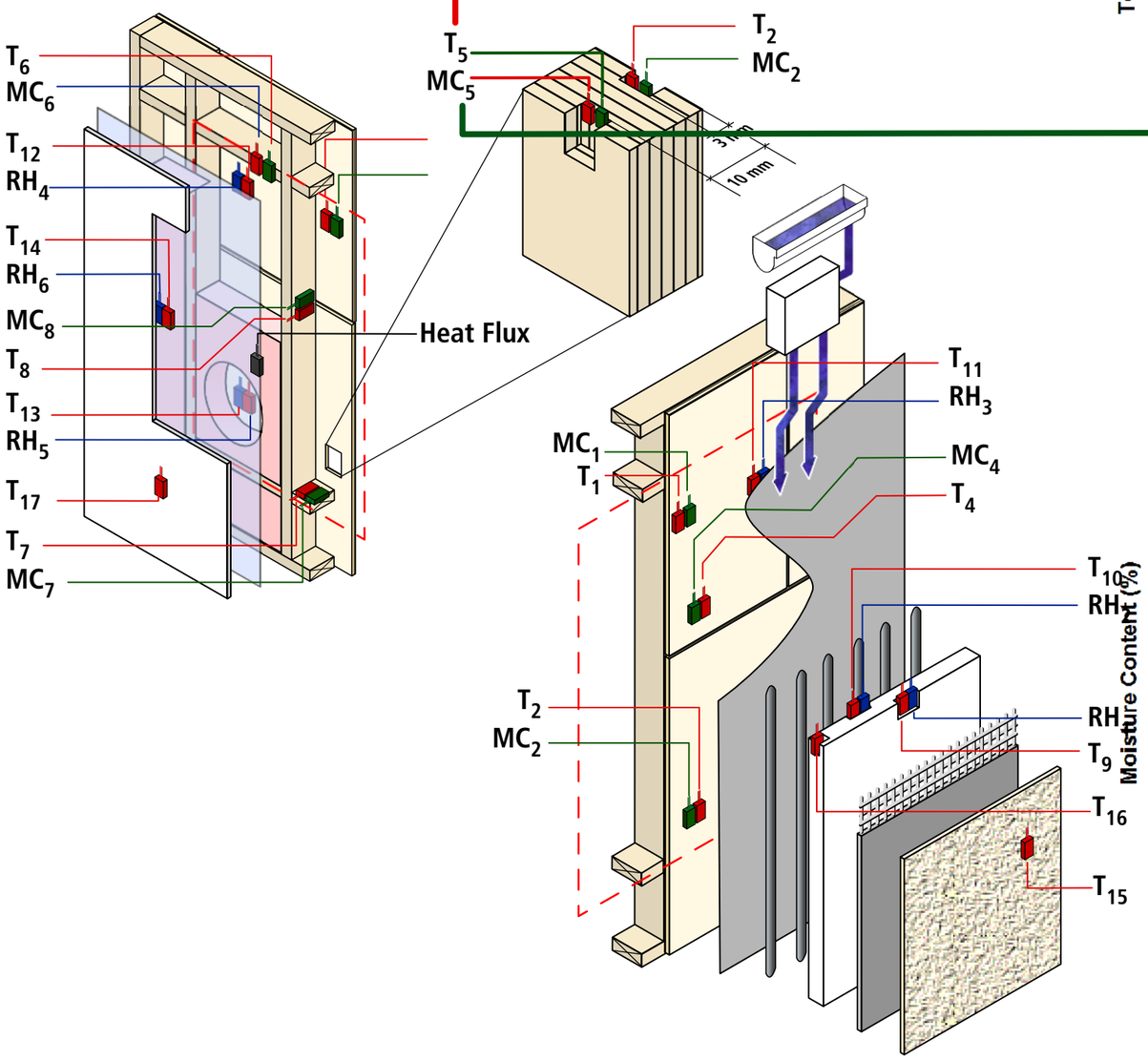
T6
MC6
T12
RH4
T14
RH6
MC8
T8
T13
RH5
T17
T7
MC7
T5
MC5
T2
MC2
3 mm
10 mm
Heat Flux
T11
RH3
MC1
T1
MC4
T4
T10
RH1
T2
MC2
RH2
T9
T16
T15

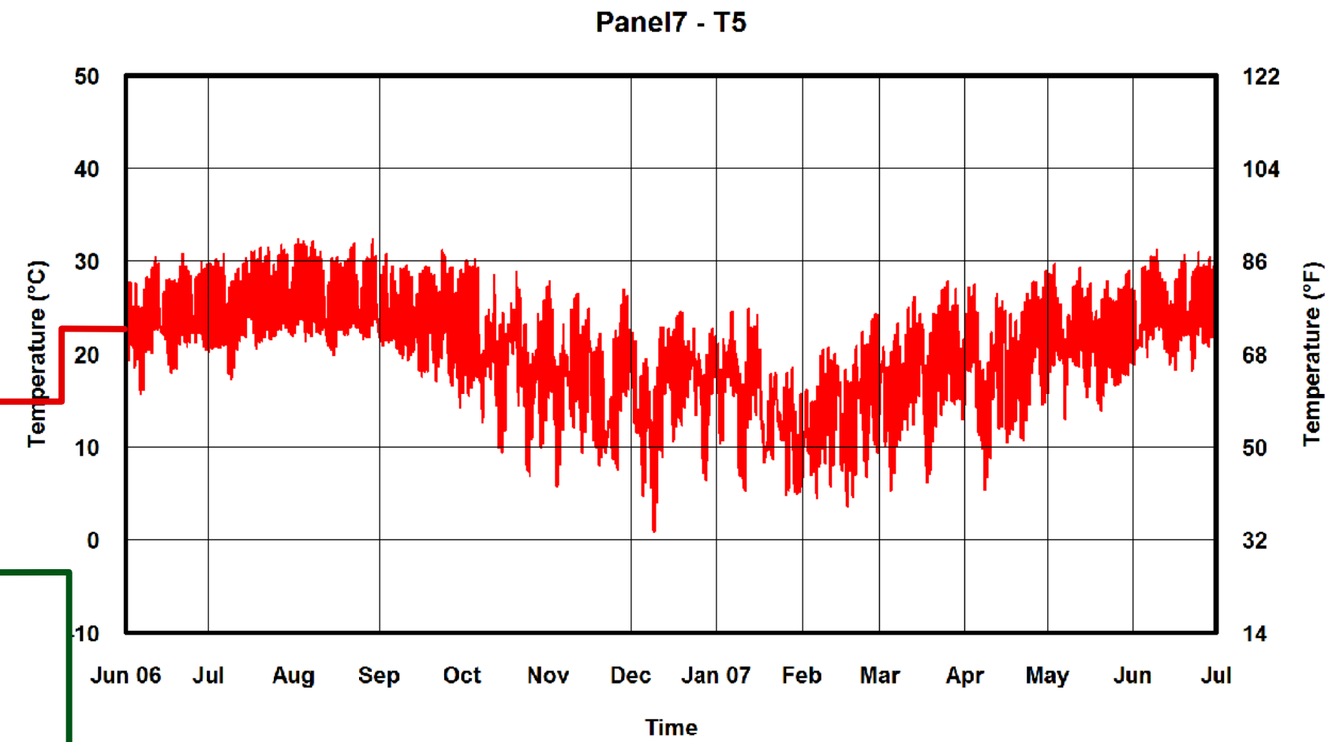
Panel7 - T5
Temperature (°C)
Temperature (°F)
50
40
30
20
10
0
-10
122
104
86
68
50
32
14
Jun 06
Jul
Aug
Sep
Oct
Nov
Dec
Jan 07
Feb
Mar
Apr
May
Jun
Jul
Time

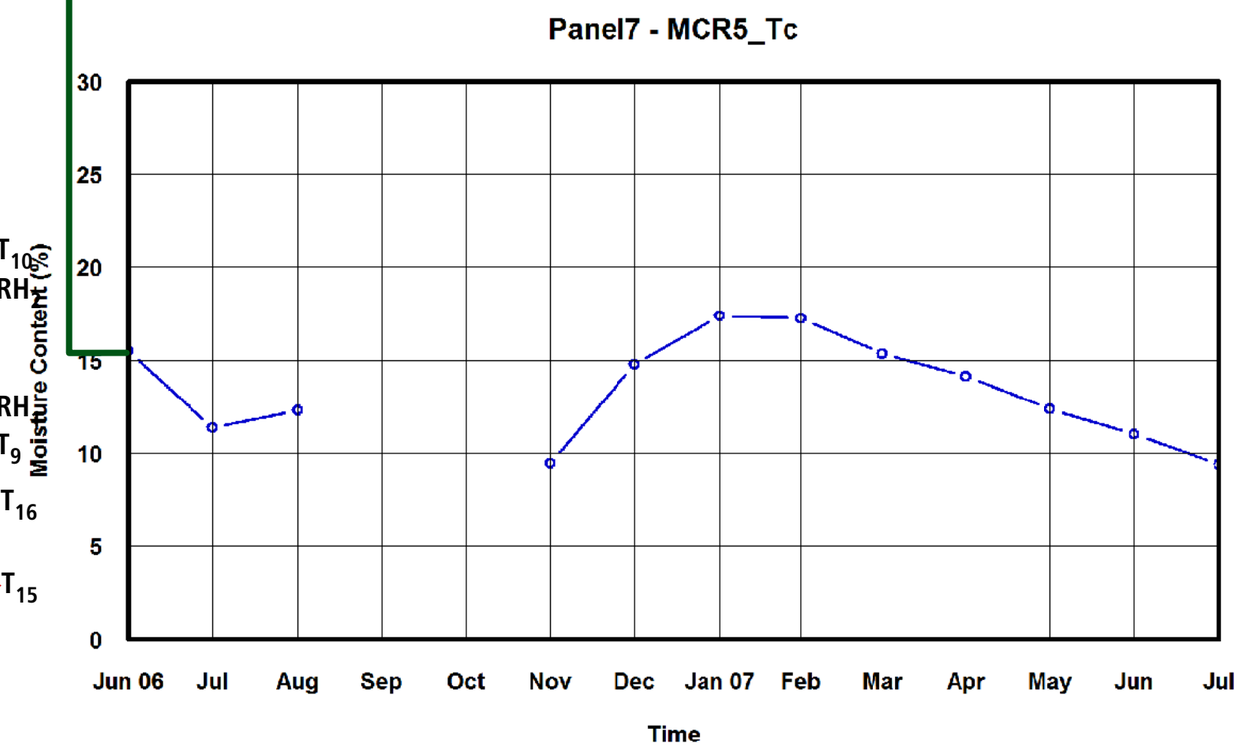
Panel7 - MCR5_Tc
Moisture Content (%)
30
25
20
15
10
5
0
Jun 06
Jul
Aug
Sep
Oct
Nov
Dec
Jan 07
Feb
Mar
Apr
May
Jun
Jul
Time

Panel 7

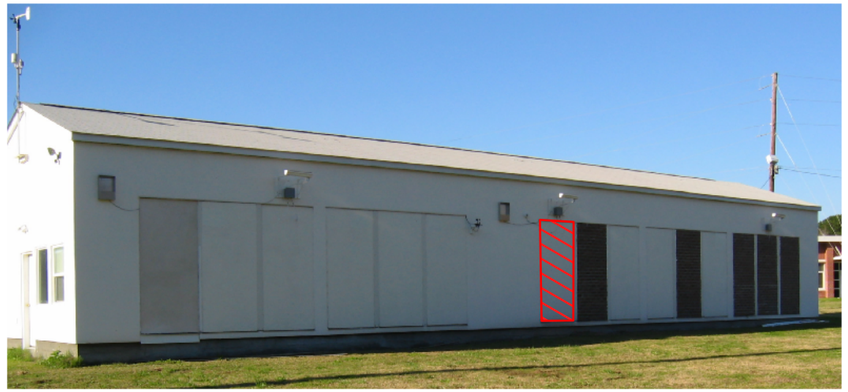

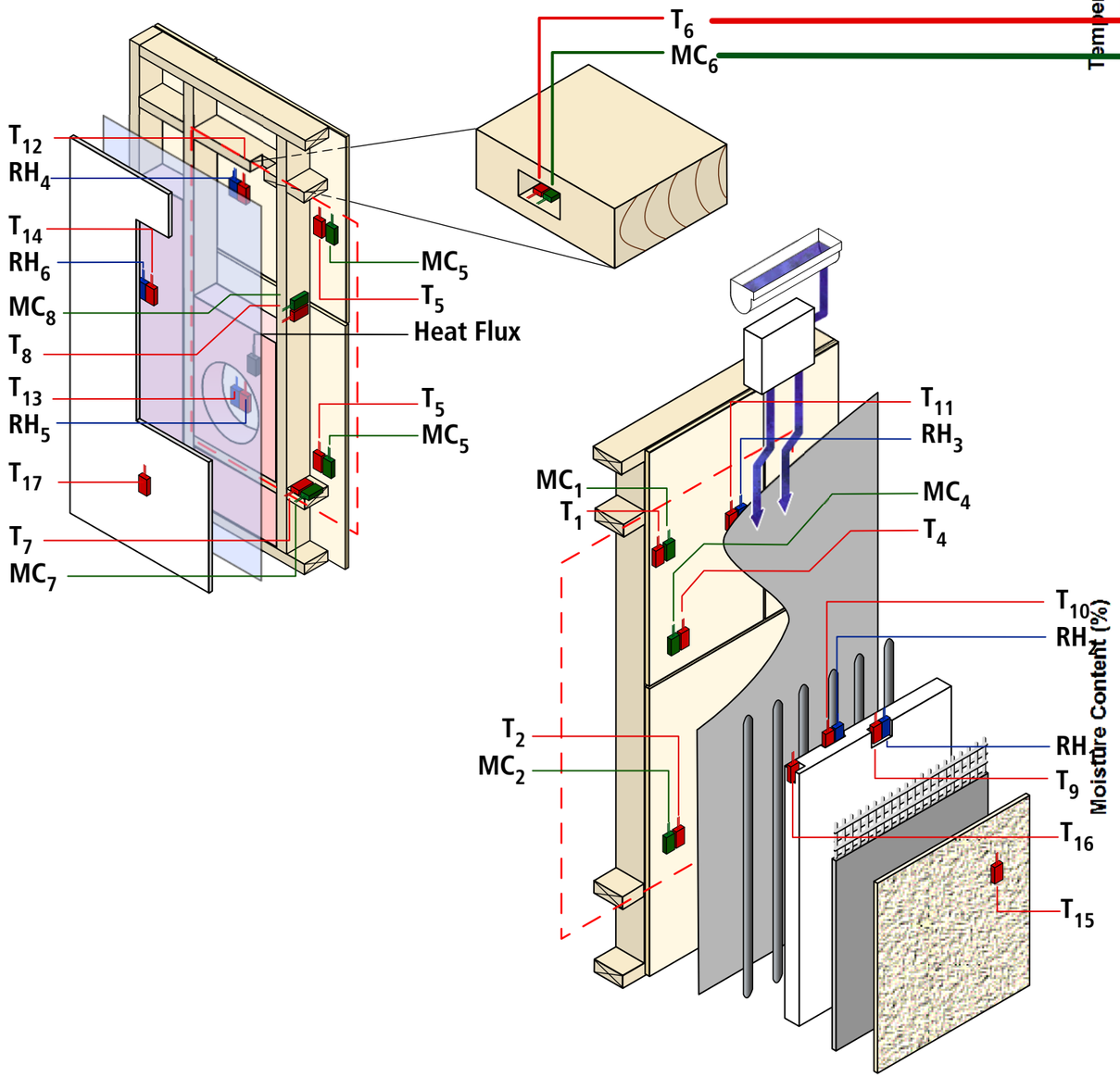
T_6
MC_6
T_{12}
RH_4
T_{14}
RH_6
MC_8
T_8
T_{13}
RH_5
T_{17}
T_7
MC_7
MC_5
T_5
Heat Flux
T_5
MC_5
T_{11}
RH_3
MC_4
T_4
MC_1
T_1
T_{10}
RH_1
T_2
MC_2
RH_2
T_9
T_{16}
T_{15}

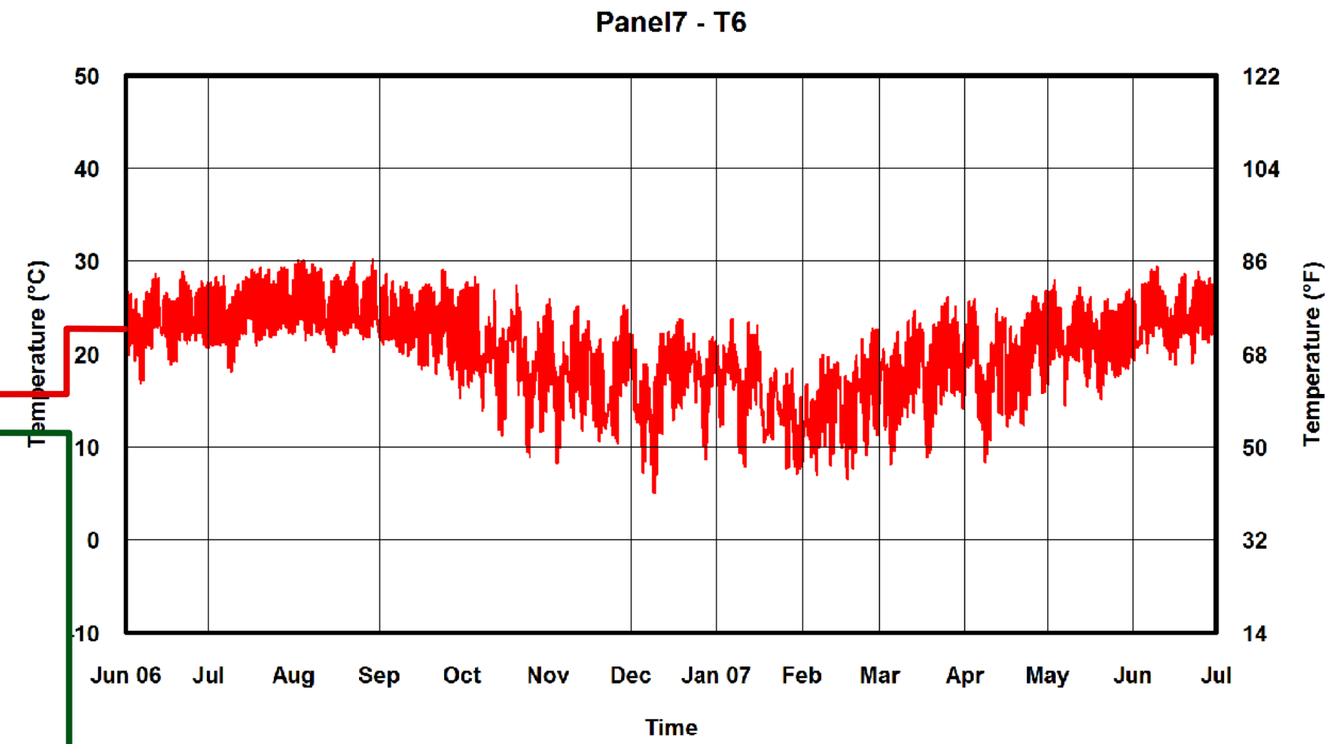
Panel7 - T6
Temperature (°C)
Temperature (°F)
50
40
30
20
10
0
-10
122
104
86
68
50
32
14
Jun 06
Jul
Aug
Sep
Oct
Nov
Dec
Jan 07
Feb
Mar
Apr
May
Jun
Jul
Time

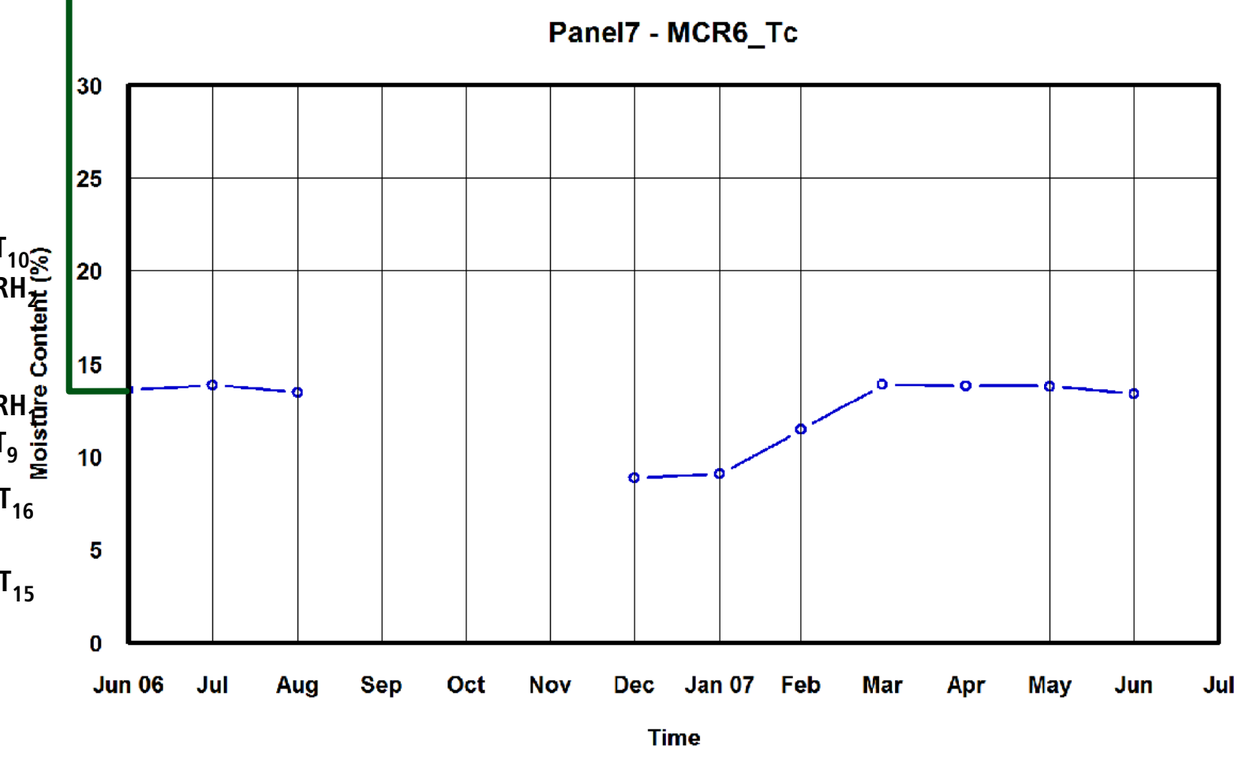
Panel7 - MCR6_Tc
Moisture Content (%)
30
25
20
15
10
5
0
Jun 06
Jul
Aug
Sep
Oct
Nov
Dec
Jan 07
Feb
Mar
Apr
May
Jun
Jul
Time

Panel 7

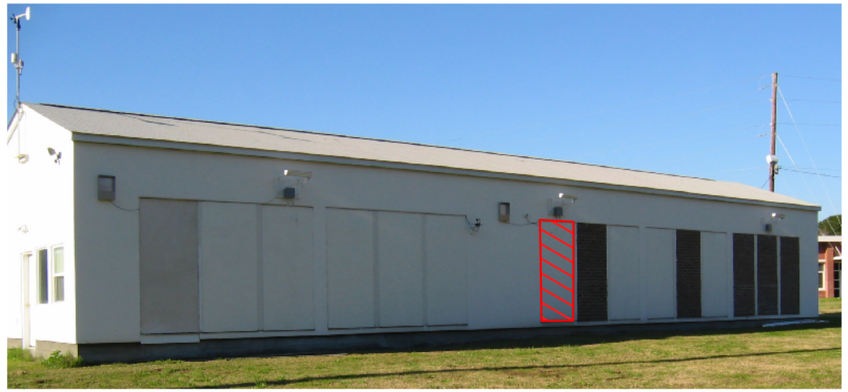

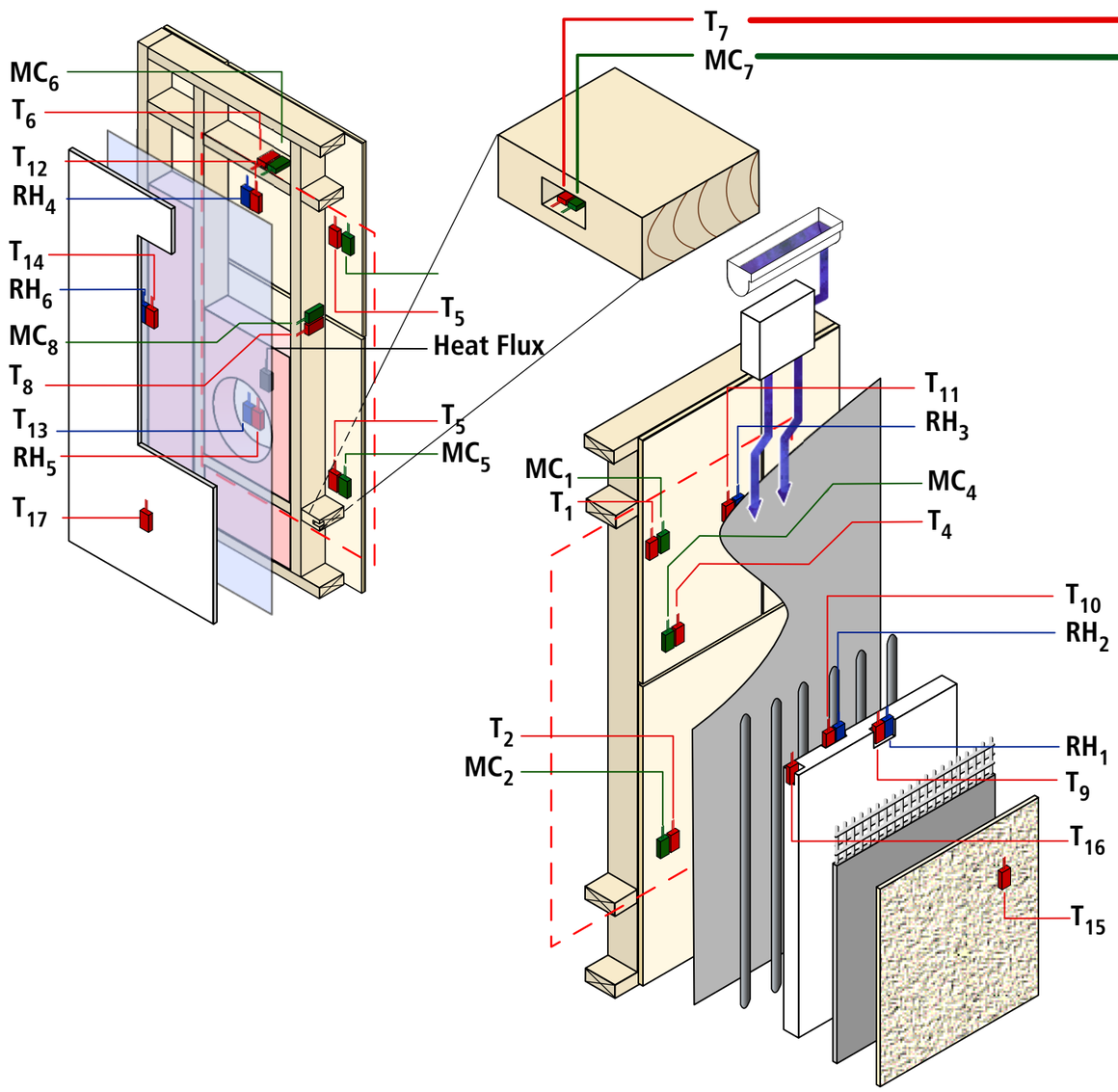
MC6
T6
T12
RH4
T14
RH6
MC8
T8
T13
RH5
T17
T7
MC7
T5
Heat Flux
T5
MC5
MC1
T1
T11
RH3
MC4
T4
T10
RH2
T2
MC2
RH1
T9
T16
T15

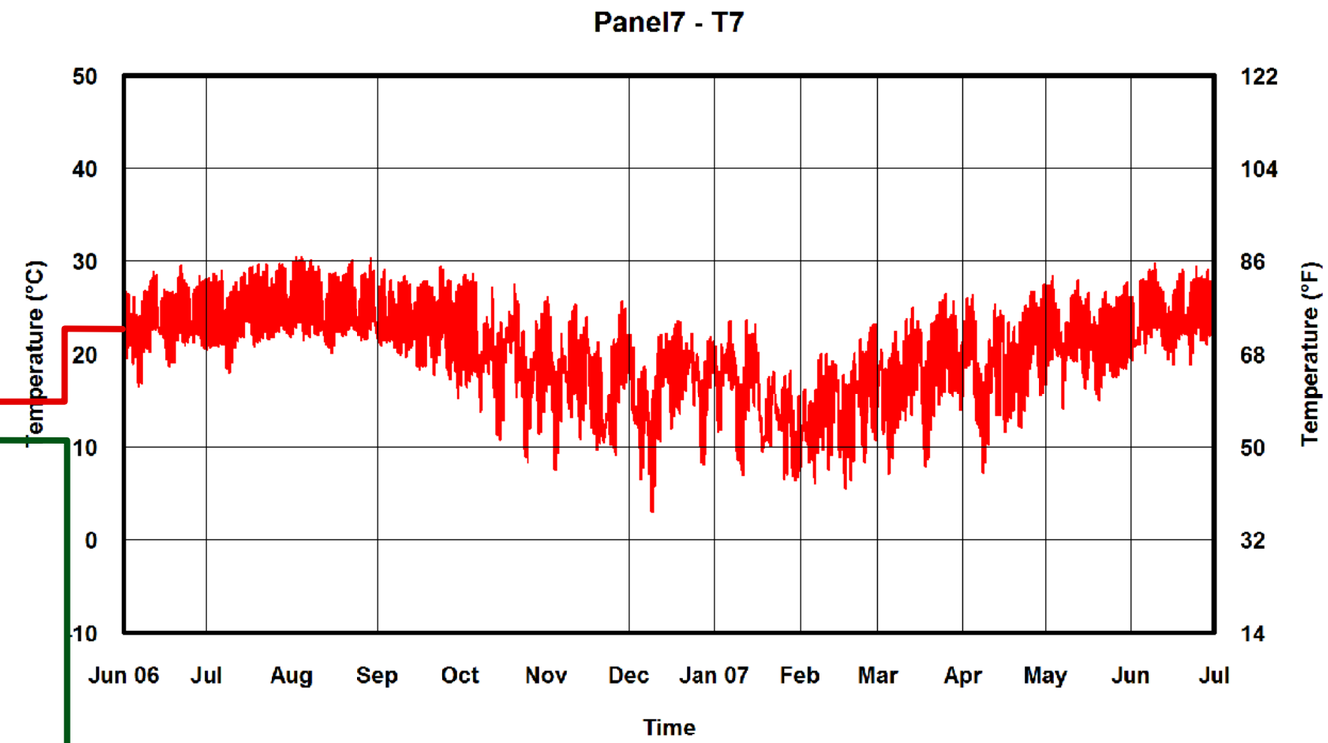
Panel7 - T7
Temperature (°C)
Temperature (°F)
50
40
30
20
10
0
-10
122
104
86
68
50
32
14
Jun 06
Jul
Aug
Sep
Oct
Nov
Dec
Jan 07
Feb
Mar
Apr
May
Jun
Jul
Time

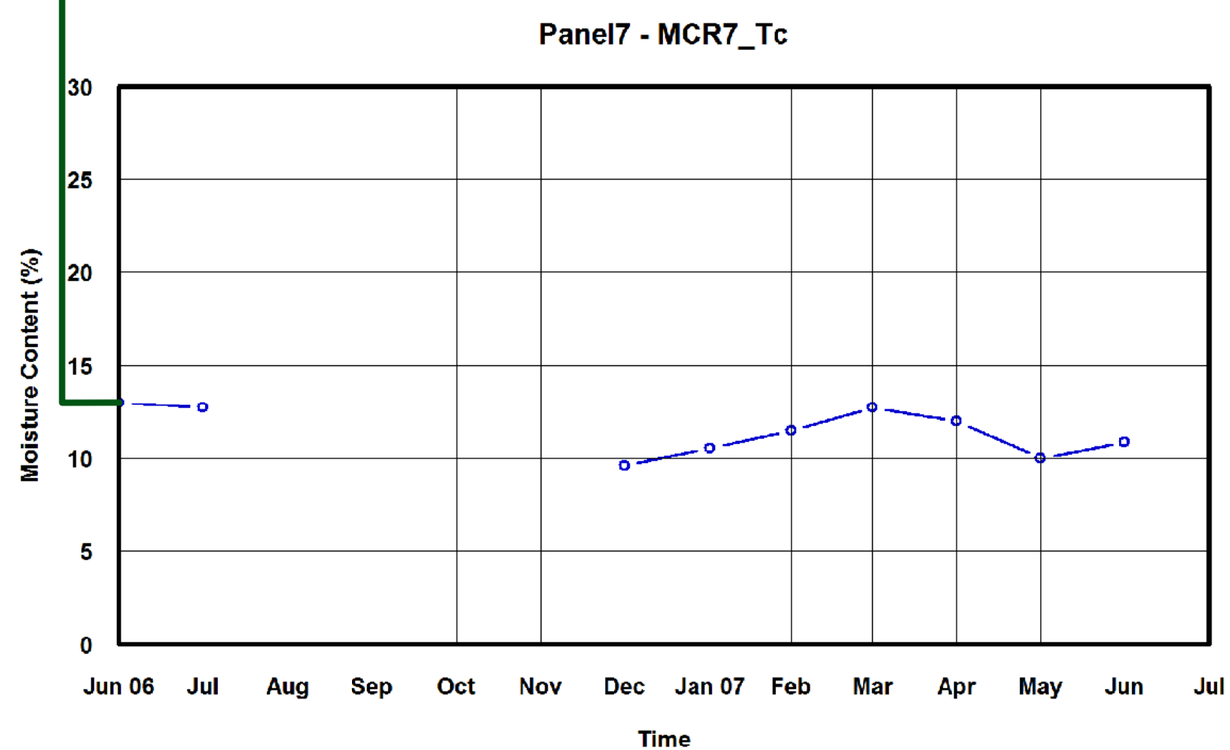
Panel7 - MCR7_Tc
Moisture Content (%)
30
25
20
15
10
5
0
Jun 06
Jul
Aug
Sep
Oct
Nov
Dec
Jan 07
Feb
Mar
Apr
May
Jun
Jul
Time

Panel 7

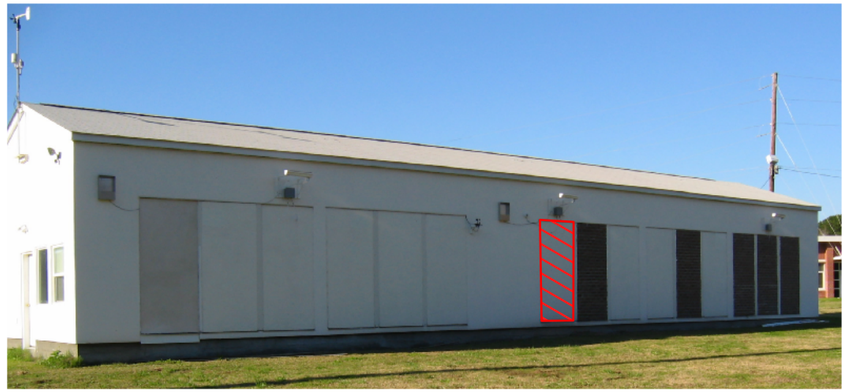

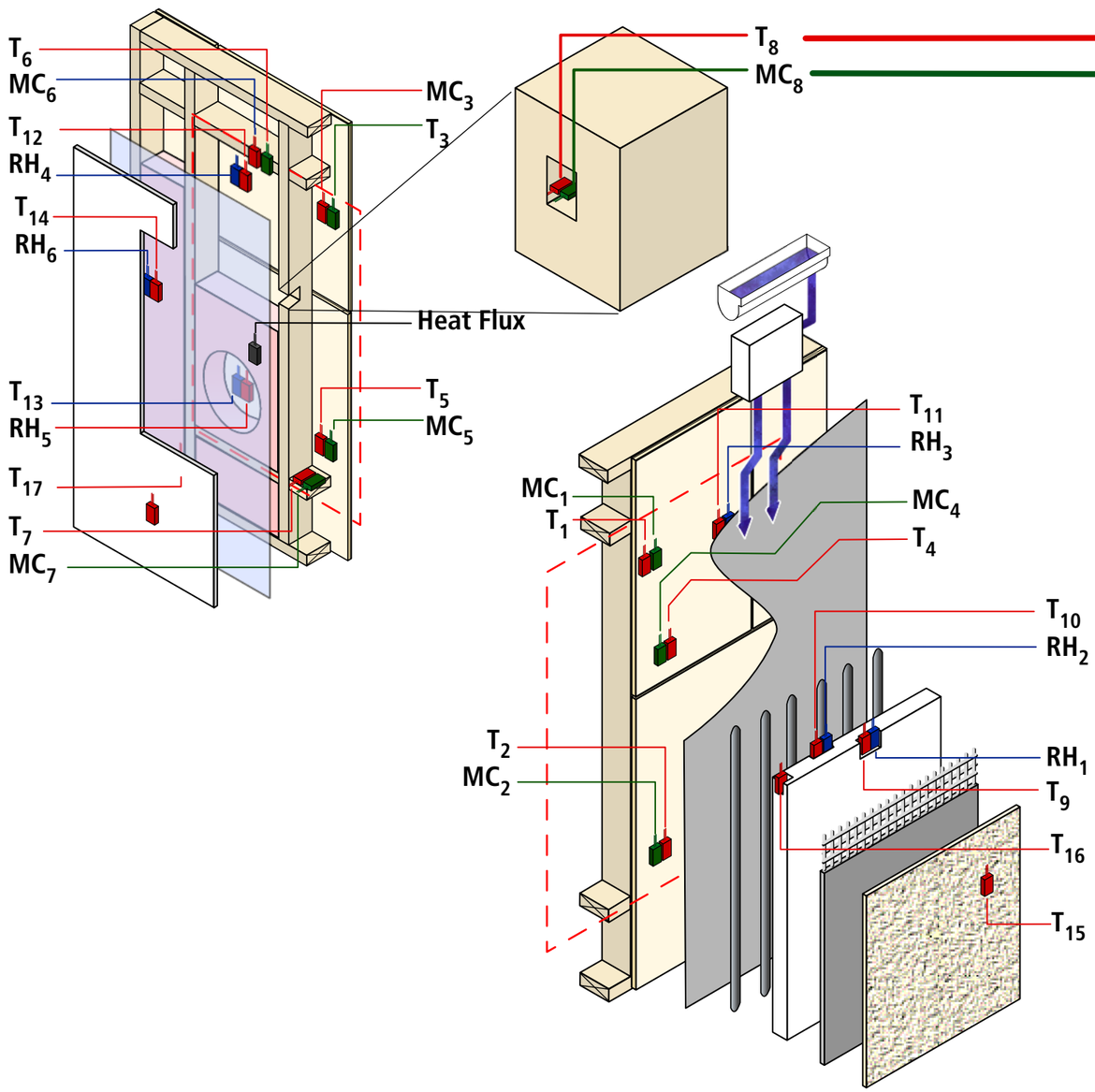
T_6
MC_6
T_{12}
RH_4
T_{14}
RH_6
T_{13}
RH_5
T_{17}
T_7
MC_7
MC_3
T_3
Heat Flux
T_5
MC_5
T_8
MC_8
T_{11}
RH_3
MC_1
T_1
MC_4
T_4
T_{10}
RH_2
T_2
MC_2
RH_1
T_9
T_{16}
T_{15}

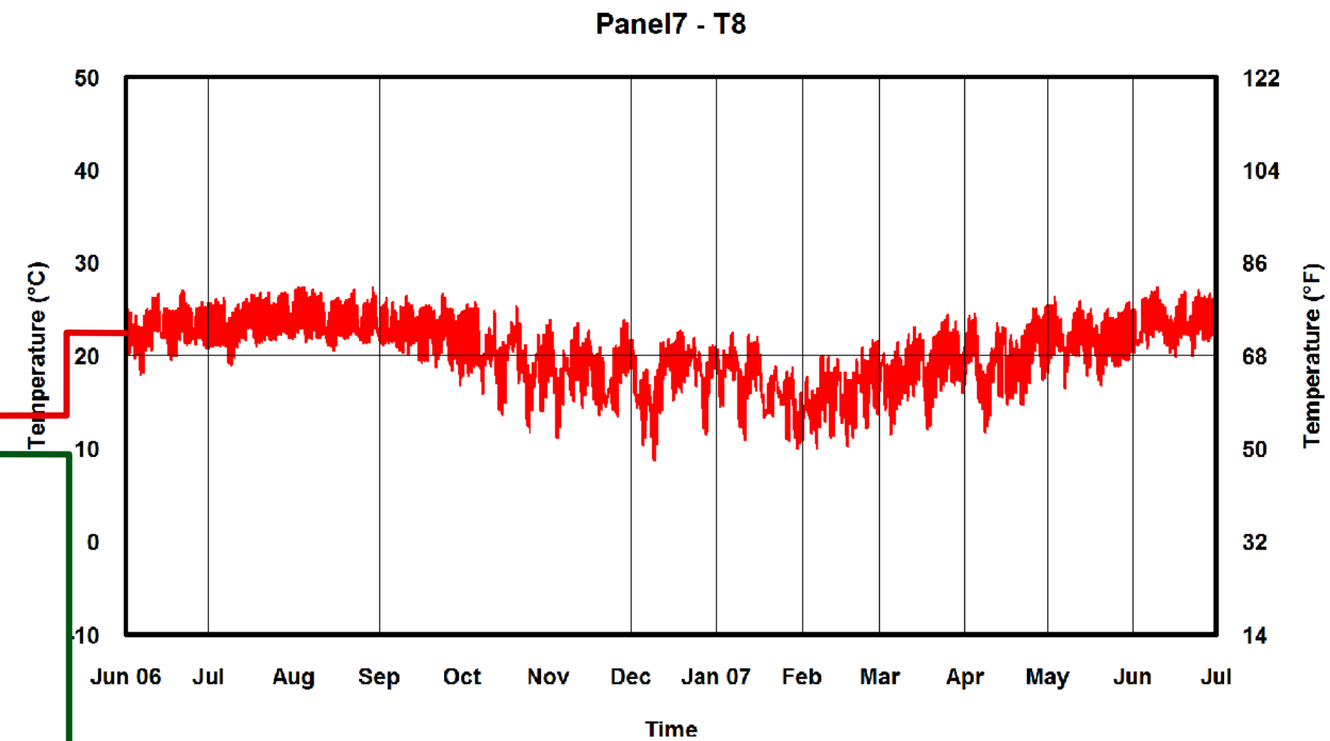
Panel7 - T8
Temperature (°C)
50
40
30
20
10
0
-10
Temperature (°F)
122
104
86
68
50
32
14
Jun 06
Jul
Aug
Sep
Oct
Nov
Dec
Jan 07
Feb
Mar
Apr
May
Jun
Jul
Time

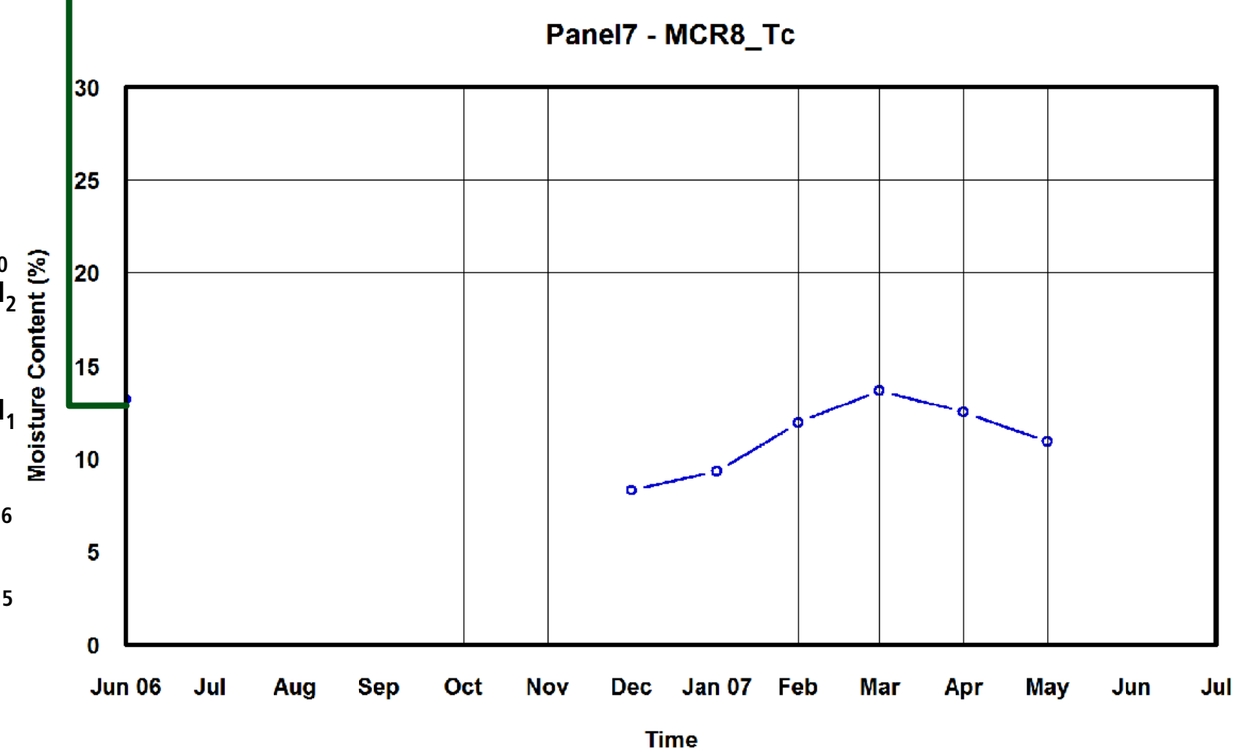
Panel7 - MCR8_Tc
Moisture Content (%)
30
25
20
15
10
5
0
Jun 06
Jul
Aug
Sep
Oct
Nov
Dec
Jan 07
Feb
Mar
Apr
May
Jun
Jul
Time

Panel 7

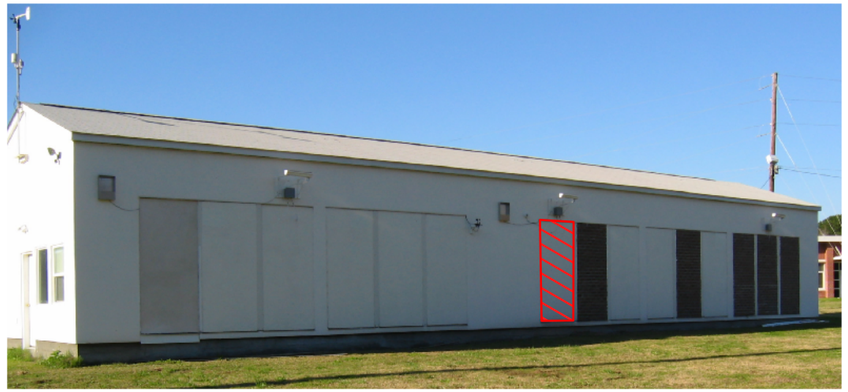

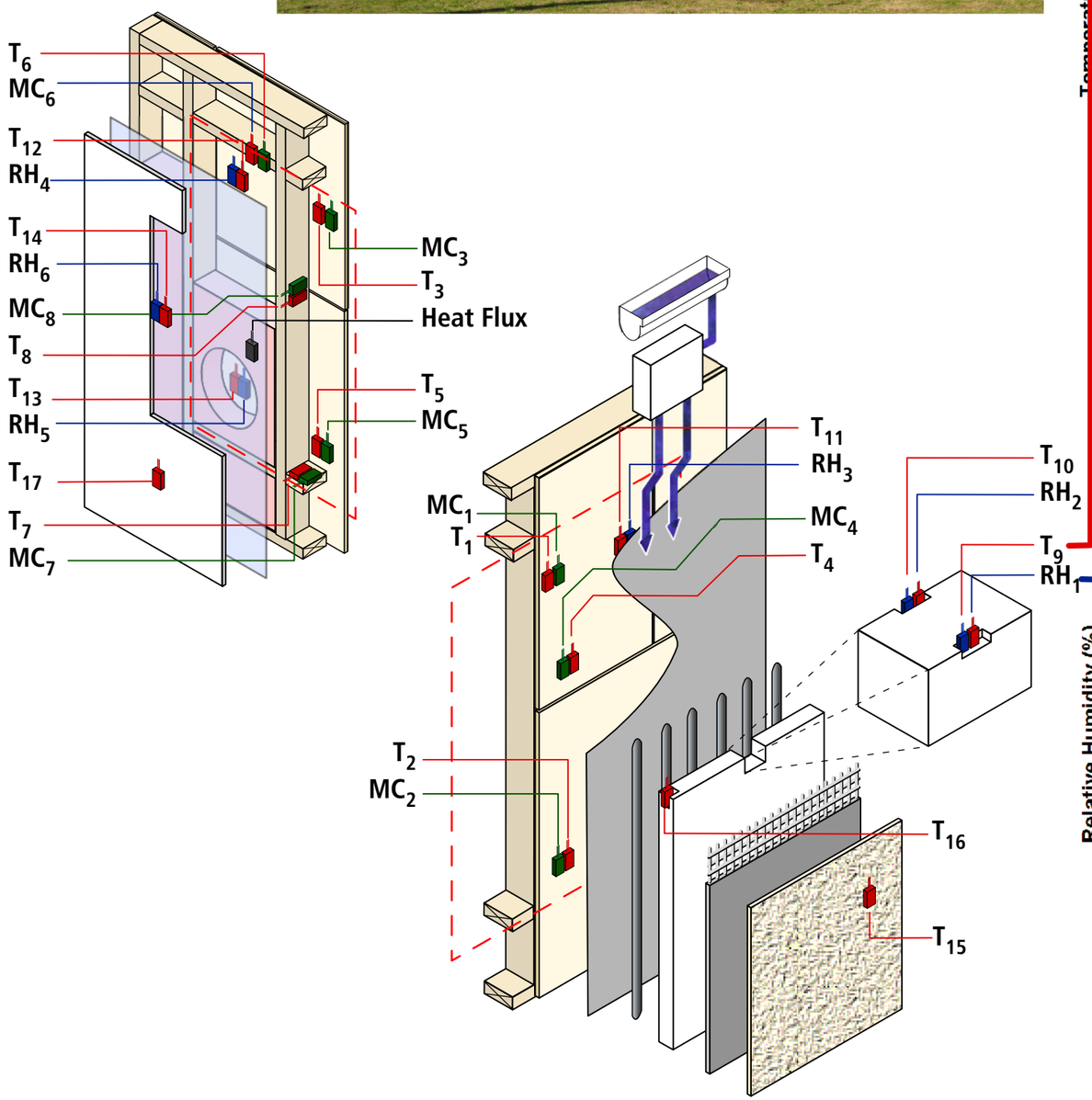
T_6
MC_6
T_{12}
RH_4
T_{14}
RH_6
MC_8
T_8
T_{13}
RH_5
T_{17}
T_7
MC_7
MC_3
T_3
Heat Flux
T_5
MC_5
T_{11}
RH_3
MC_1
T_1
MC_4
T_4
T_{10}
RH_2
T_9
RH_1
T_2
MC_2
T_{16}
T_{15}

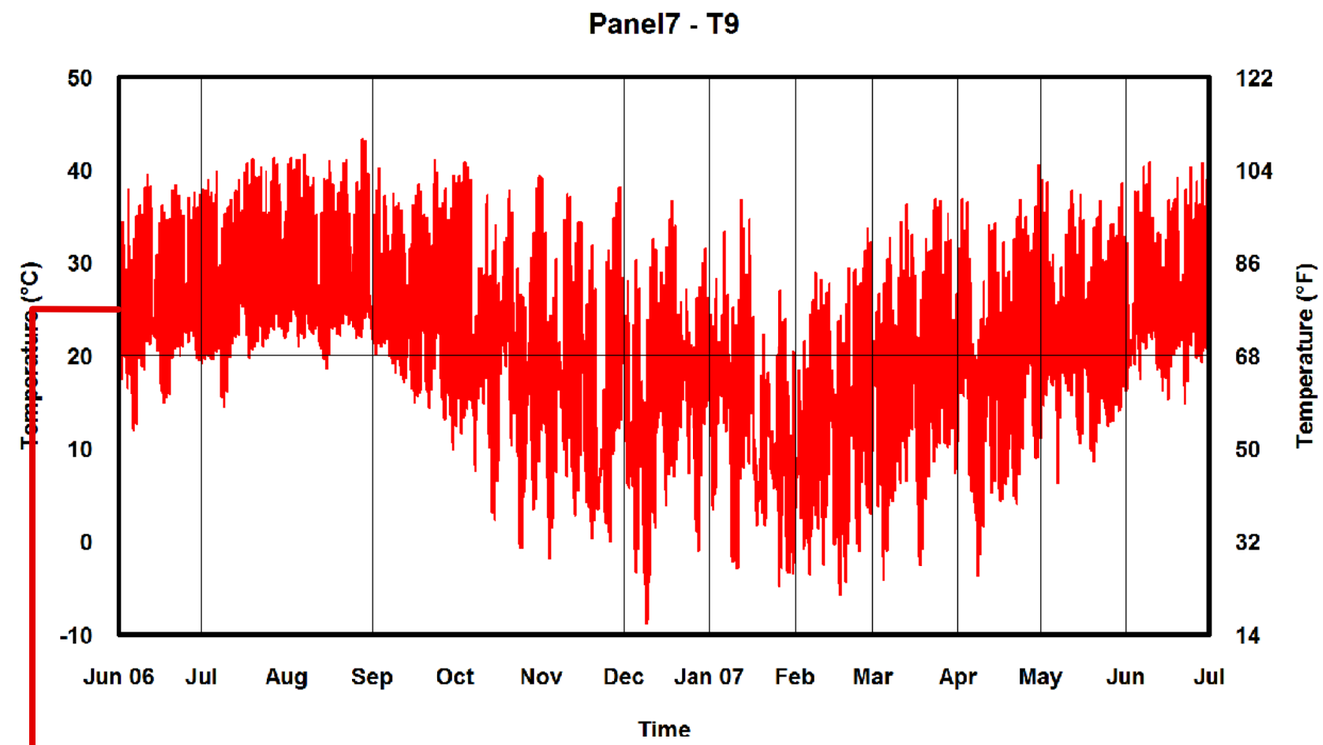
Panel7 - T9
Temperature (°C)
Temperature (°F)
50
40
30
20
10
0
-10
122
104
86
68
50
32
14
Jun 06
Jul
Aug
Sep
Oct
Nov
Dec
Jan 07
Feb
Mar
Apr
May
Jun
Jul
Time

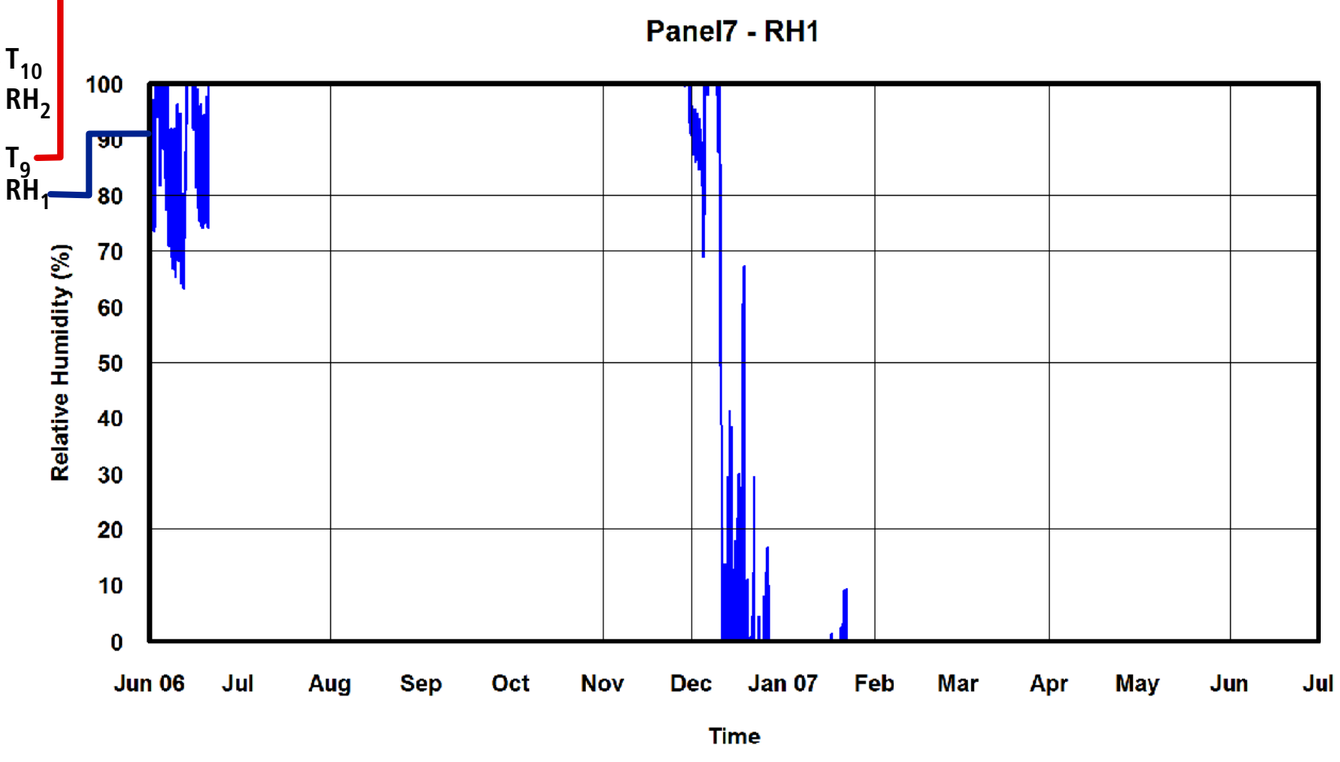
Panel7 - RH1
Relative Humidity (%)
100
90
80
70
60
50
40
30
20
10
0
Jun 06
Jul
Aug
Sep
Oct
Nov
Dec
Jan 07
Feb
Mar
Apr
May
Jun
Jul
Time

Panel 7

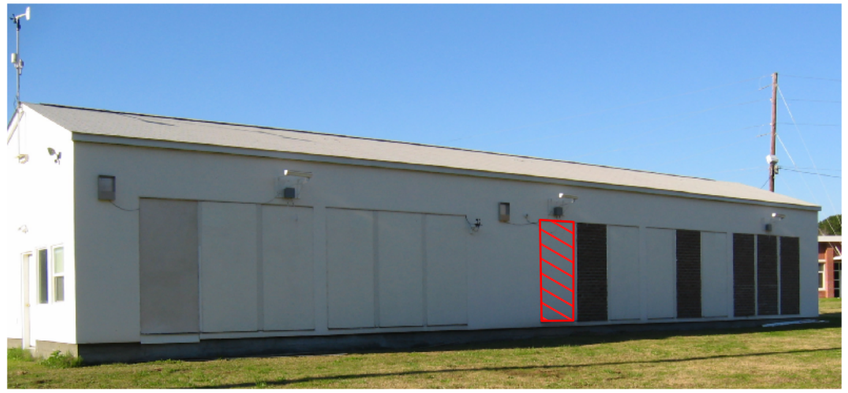

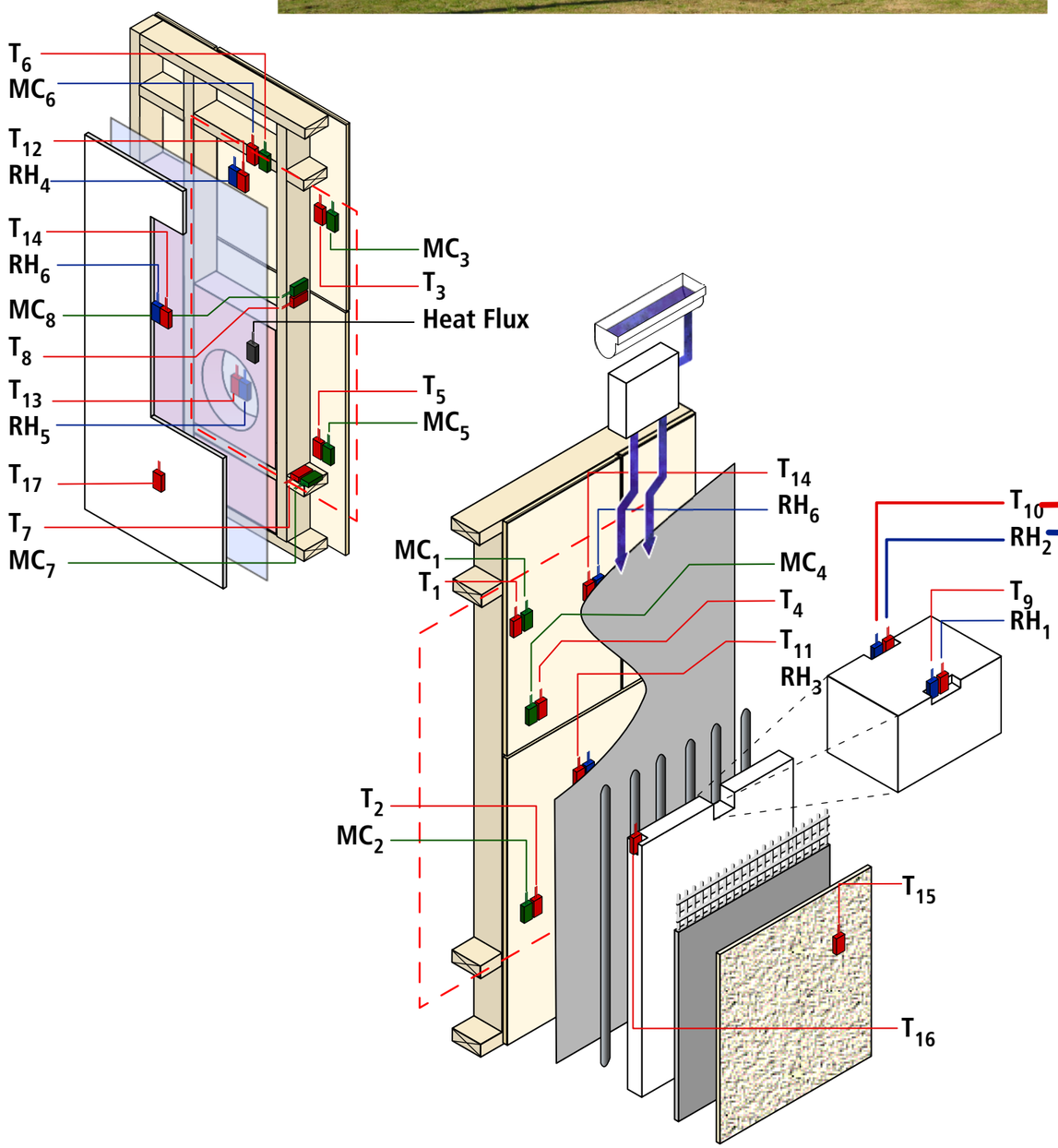
T_6
MC_6
T_{12}
RH_4
T_{14}
RH_6
MC_8
T_8
T_{13}
RH_5
T_{17}
T_7
MC_7
MC_3
T_3
Heat Flux
T_5
MC_5
T_{14}
RH_6
MC_1
T_1
MC_4
T_4
T_{11}
RH_3
T_{10}
RH_2
T_9
RH_1
T_2
MC_2
T_{15}
T_{16}

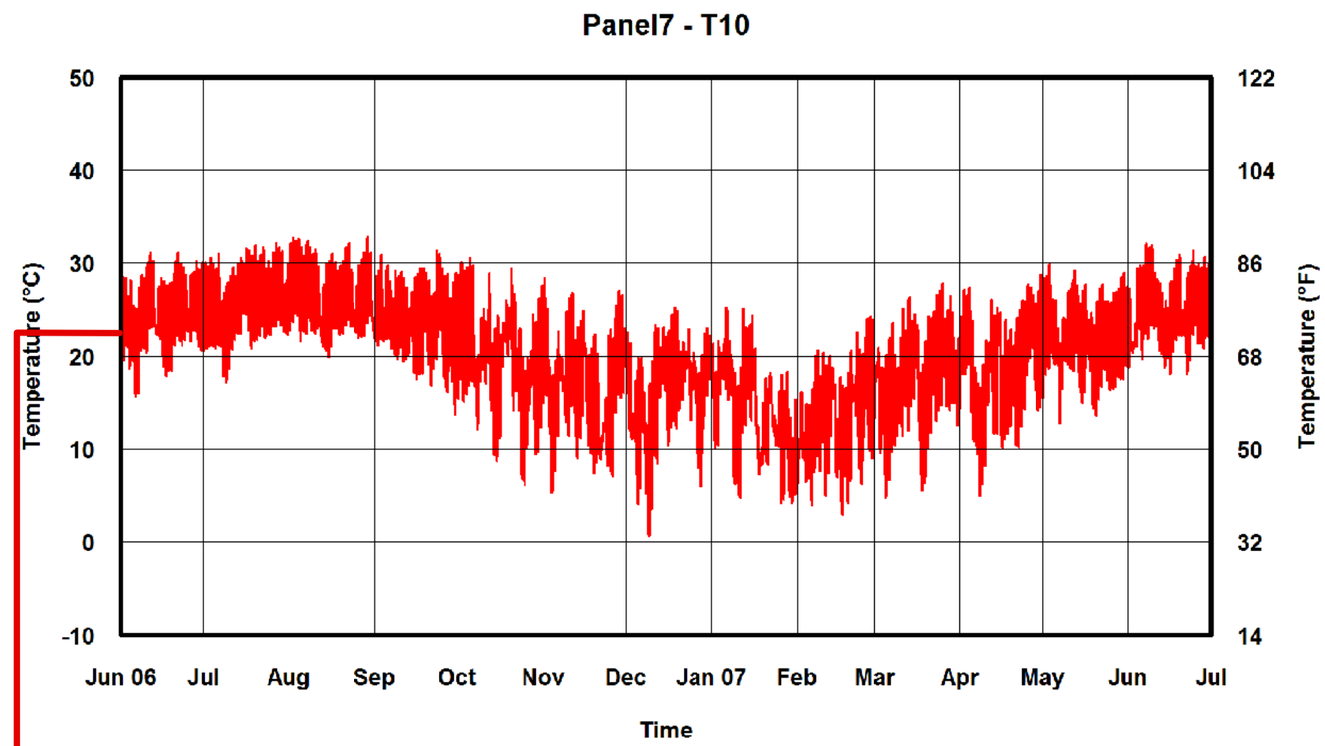
Panel7 - T10
Temperature (°C)
50
40
30
20
10
0
-10
Temperature (°F)
122
104
86
68
50
32
14
Jun 06
Jul
Aug
Sep
Oct
Nov
Dec
Jan 07
Feb
Mar
Apr
May
Jun
Jul
Time

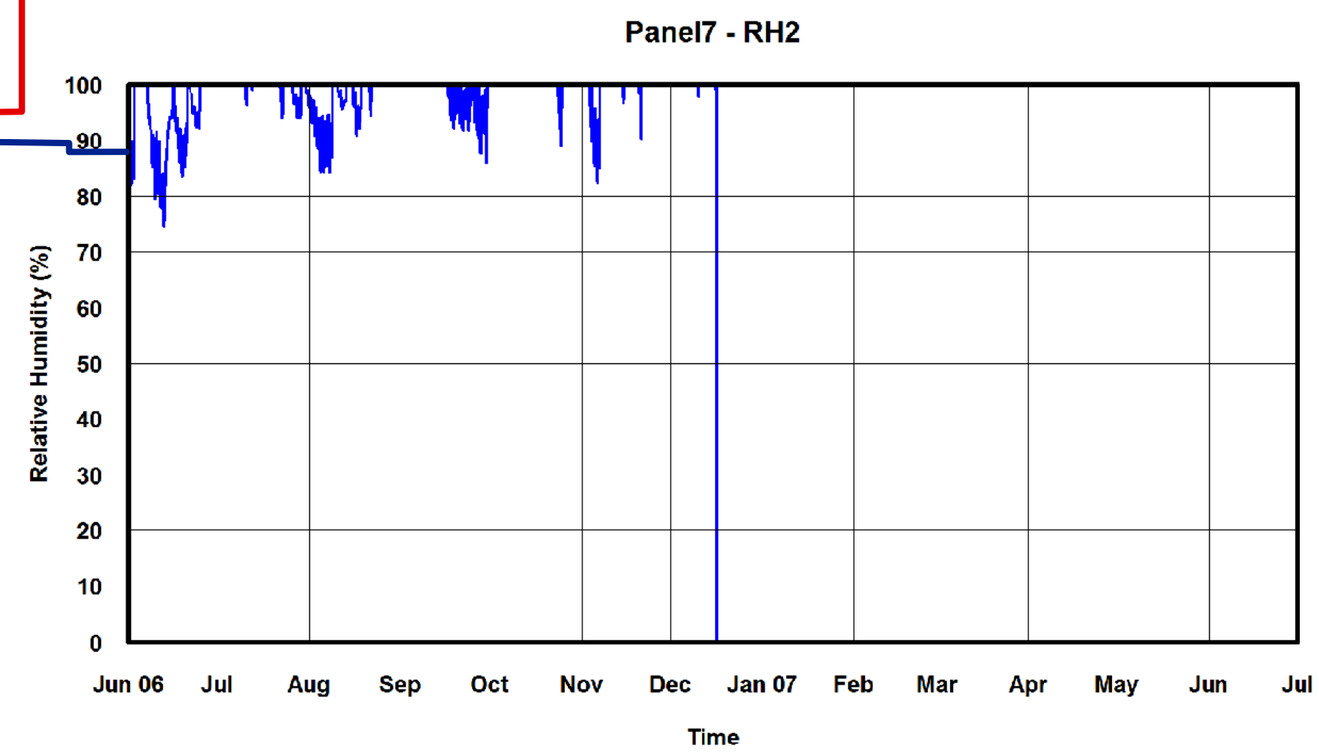
Panel7 - RH2
Relative Humidity (%)
100
90
80
70
60
50
40
30
20
10
0
Jun 06
Jul
Aug
Sep
Oct
Nov
Dec
Jan 07
Feb
Mar
Apr
May
Jun
Jul
Time

Panel 7

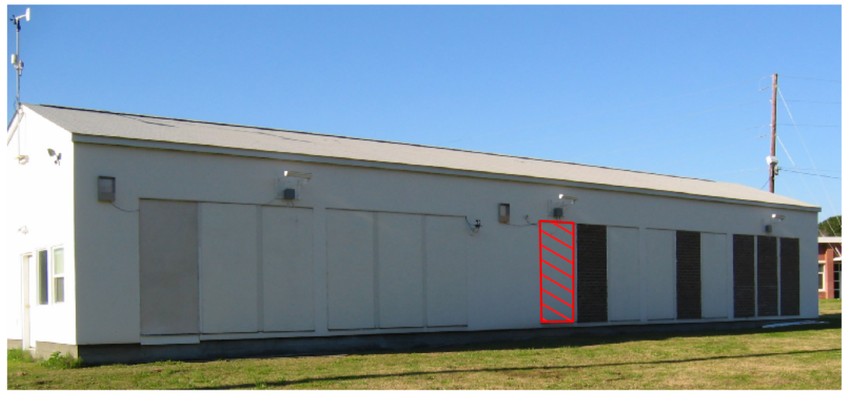

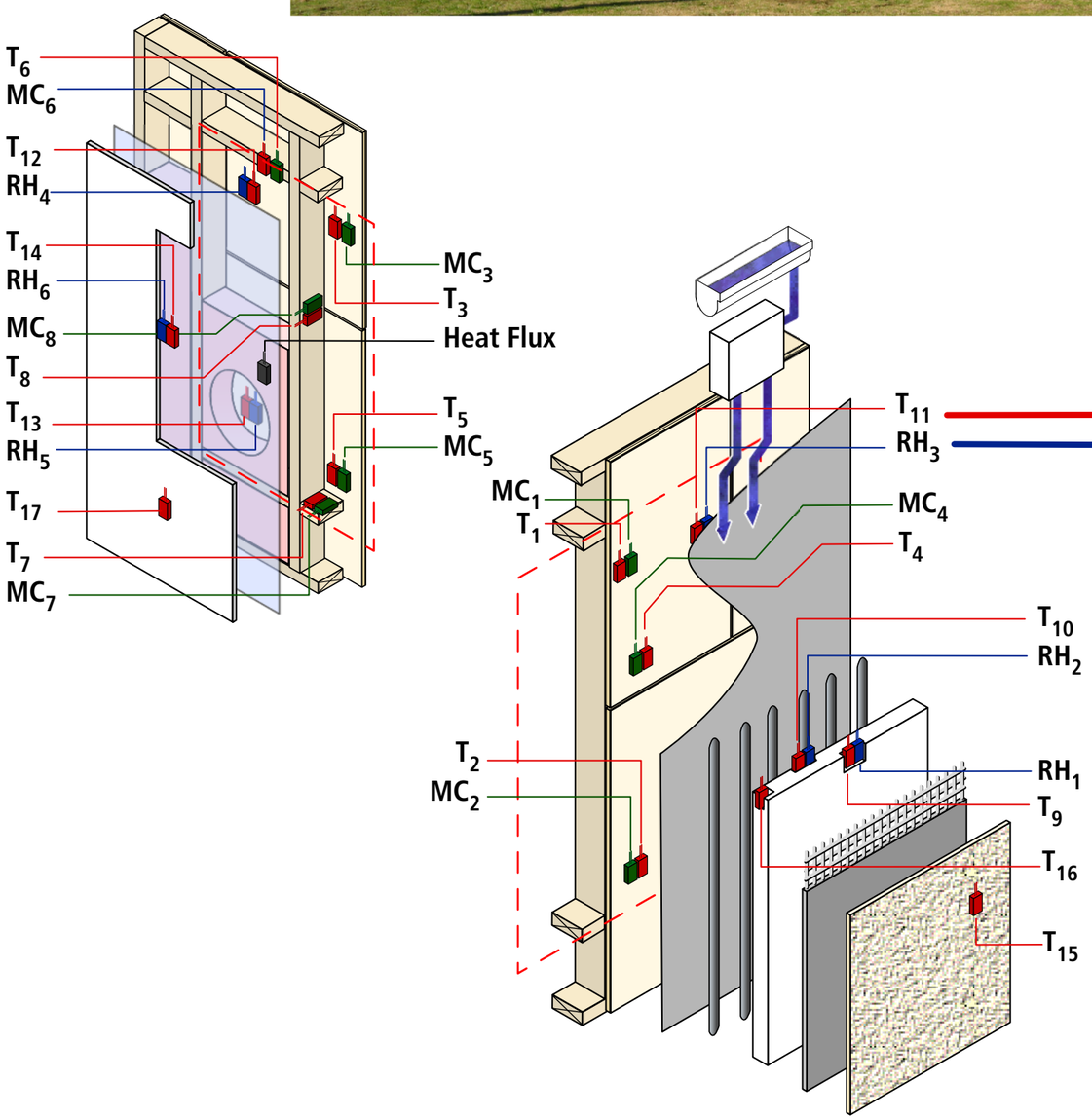
T_6
MC_6
T_{12}
RH_4
T_{14}
RH_6
MC_8
T_8
T_{13}
RH_5
T_{17}
T_7
MC_7
MC_3
T_3
Heat Flux
T_5
MC_5
MC_1
T_1
T_{11}
RH_3
MC_4
T_4
T_{10}
RH_2
T_2
MC_2
RH_1
T_9
T_{16}
T_{15}

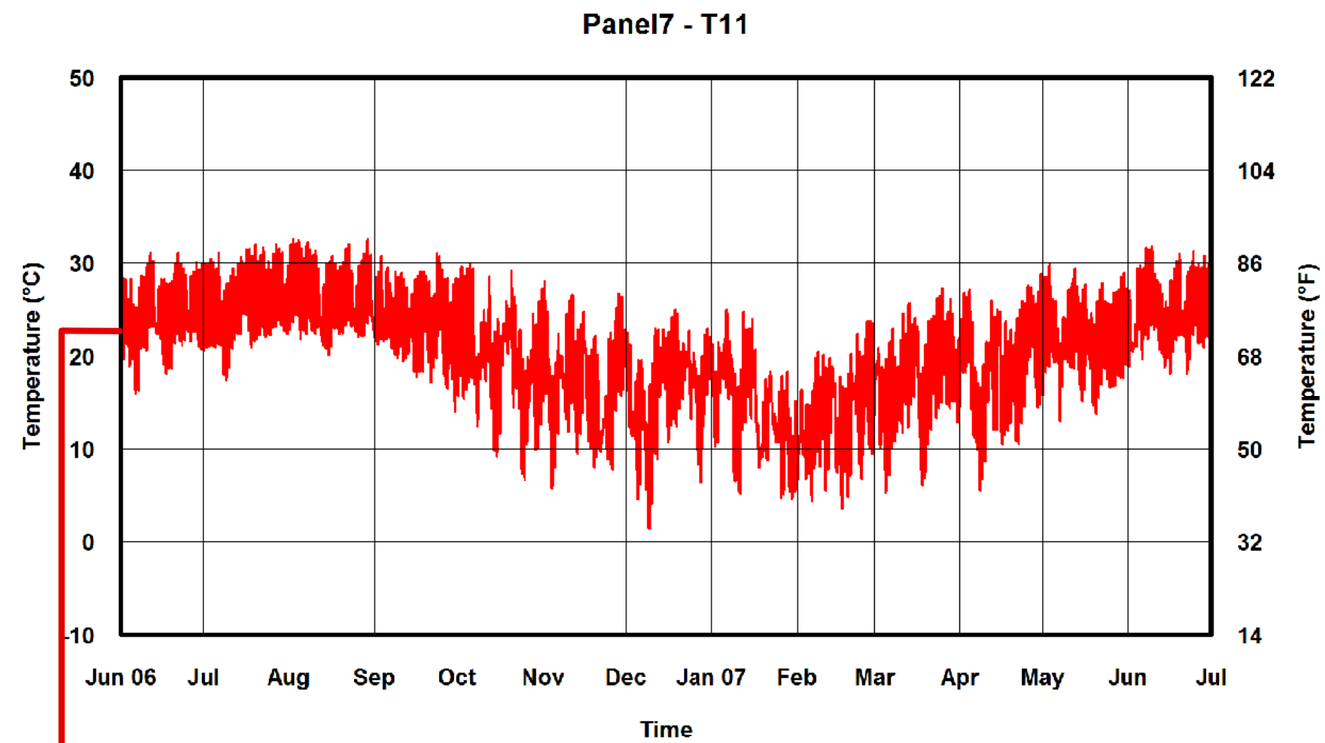
Panel7 - T11
Temperature (°C)
50
40
30
20
10
0
-10
Temperature (°F)
122
104
86
68
50
32
14
Jun 06
Jul
Aug
Sep
Oct
Nov
Dec
Jan 07
Feb
Mar
Apr
May
Jun
Jul
Time

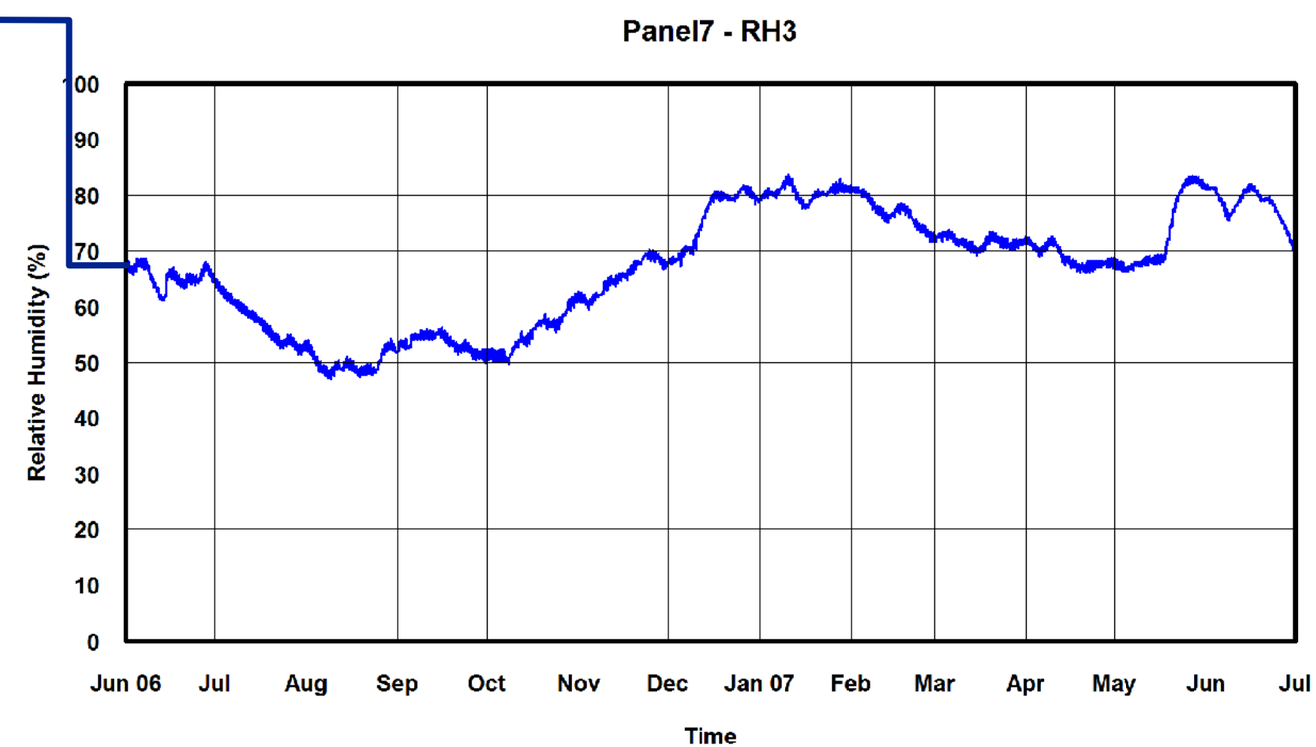
Panel7 - RH3
Relative Humidity (%)
100
90
80
70
60
50
40
30
20
10
0
Jun 06
Jul
Aug
Sep
Oct
Nov
Dec
Jan 07
Feb
Mar
Apr
May
Jun
Jul
Time

Panel 7

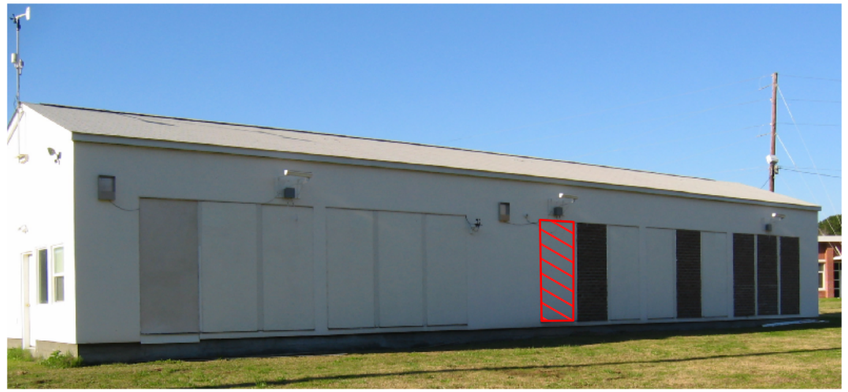

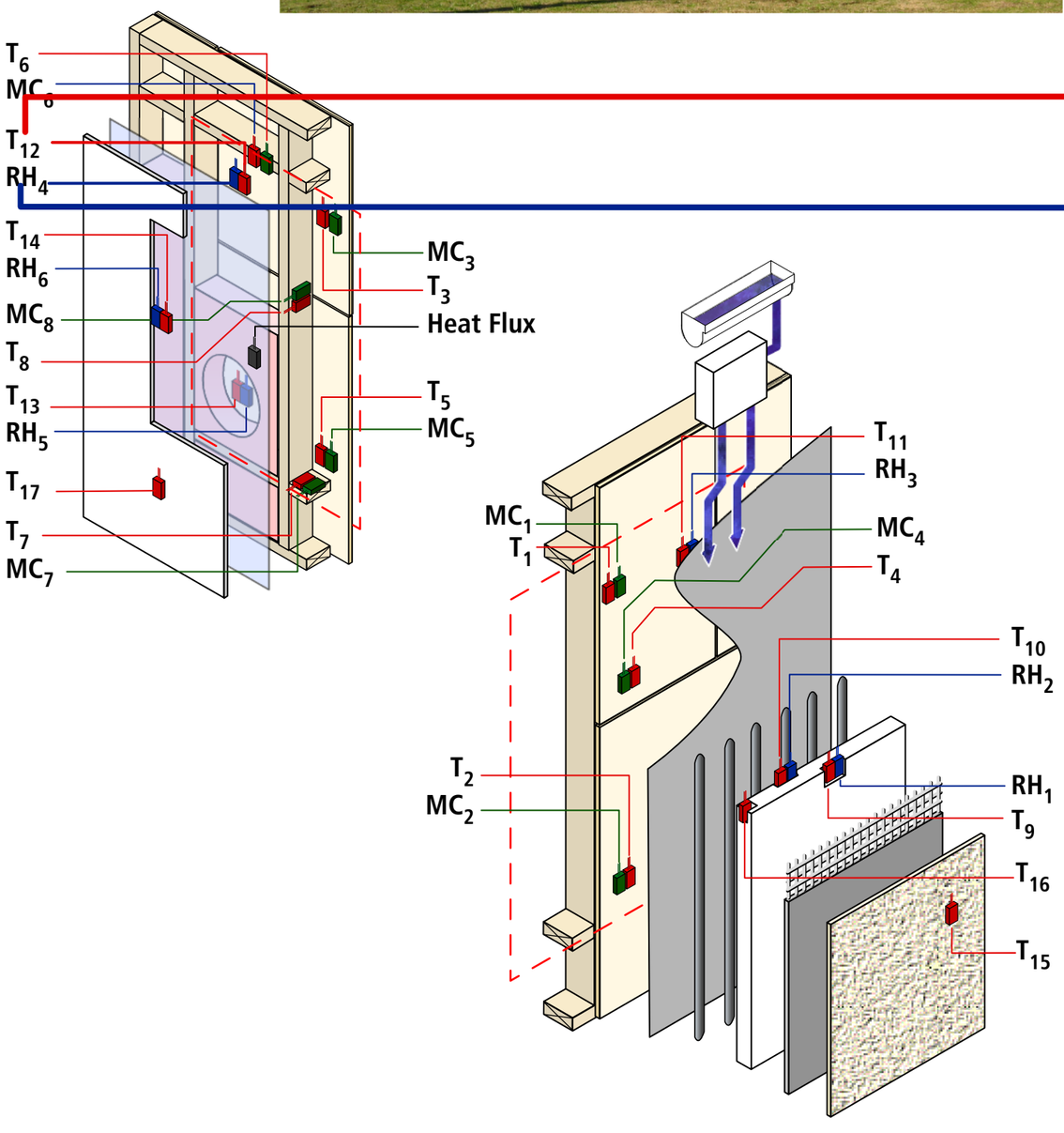
T_6
MC_6
T_{12}
RH_4
T_{14}
RH_6
MC_8
T_8
T_{13}
RH_5
T_{17}
T_7
MC_7
MC_3
T_3
Heat Flux
T_5
MC_5
T_{11}
RH_3
MC_1
T_1
MC_4
T_4
T_{10}
RH_2
T_2
MC_2
RH_1
T_9
T_{16}
T_{15}

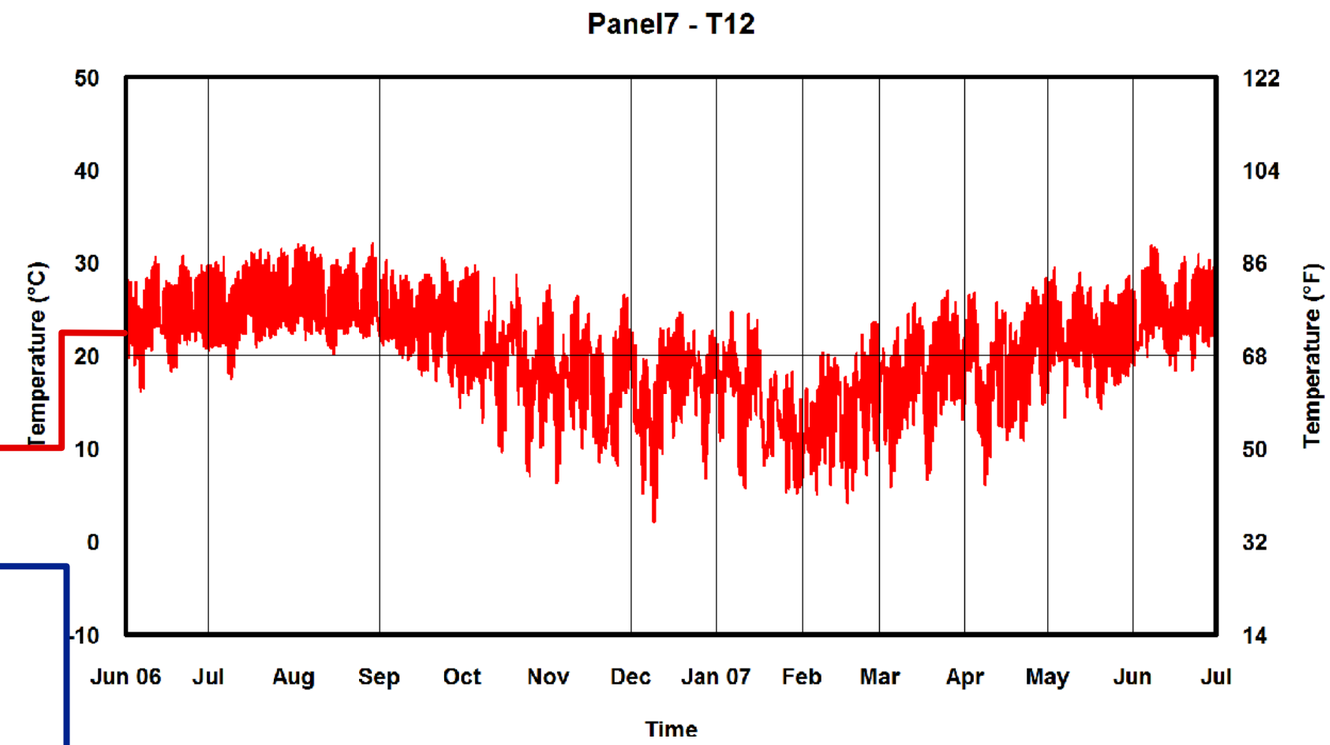
Panel7 - T12
Temperature (°C)
50
40
30
20
10
0
-10
Temperature (°F)
122
104
86
68
50
32
14
Jun 06
Jul
Aug
Sep
Oct
Nov
Dec
Jan 07
Feb
Mar
Apr
May
Jun
Jul
Time

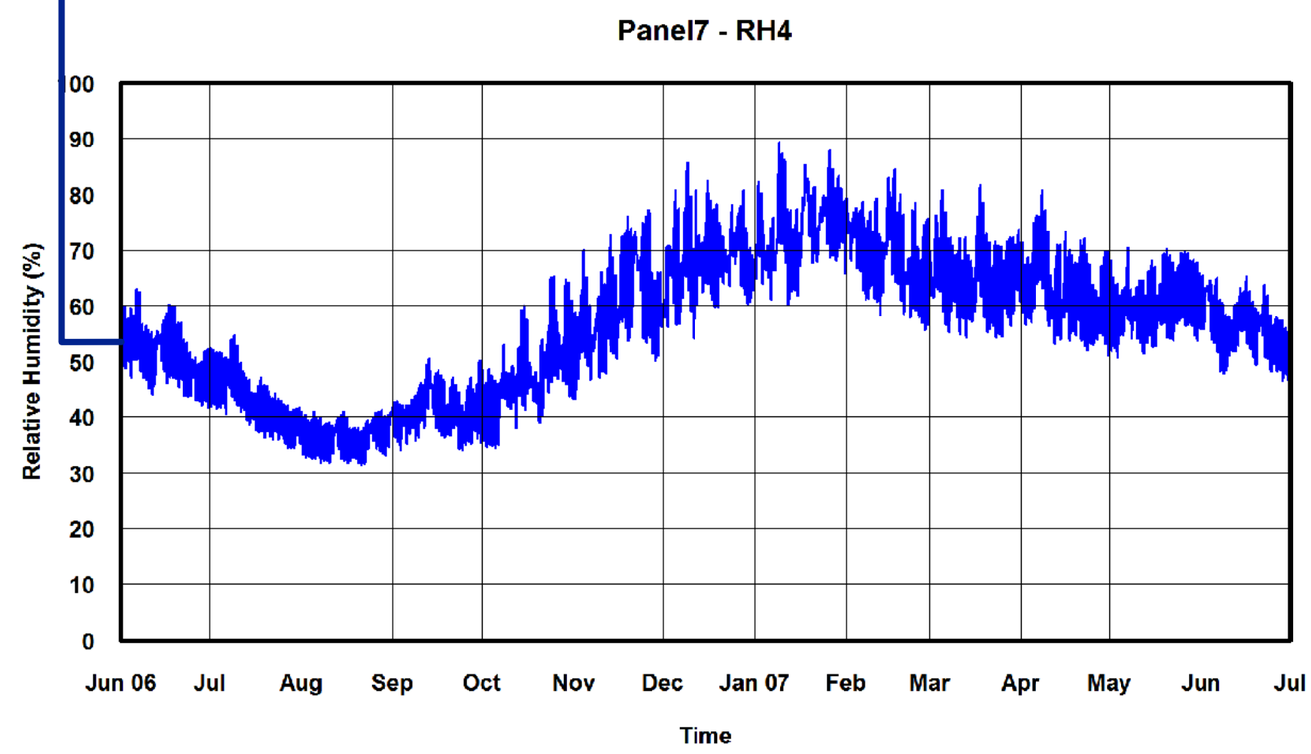
Panel7 - RH4
Relative Humidity (%)
100
90
80
70
60
50
40
30
20
10
0
Jun 06
Jul
Aug
Sep
Oct
Nov
Dec
Jan 07
Feb
Mar
Apr
May
Jun
Jul
Time

Panel 7

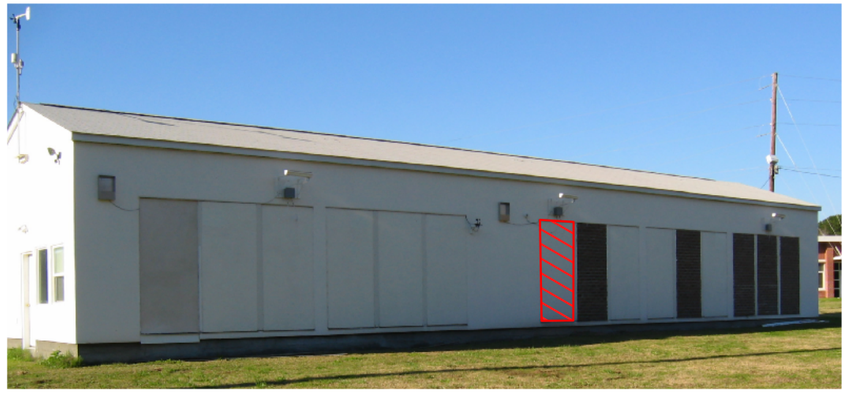

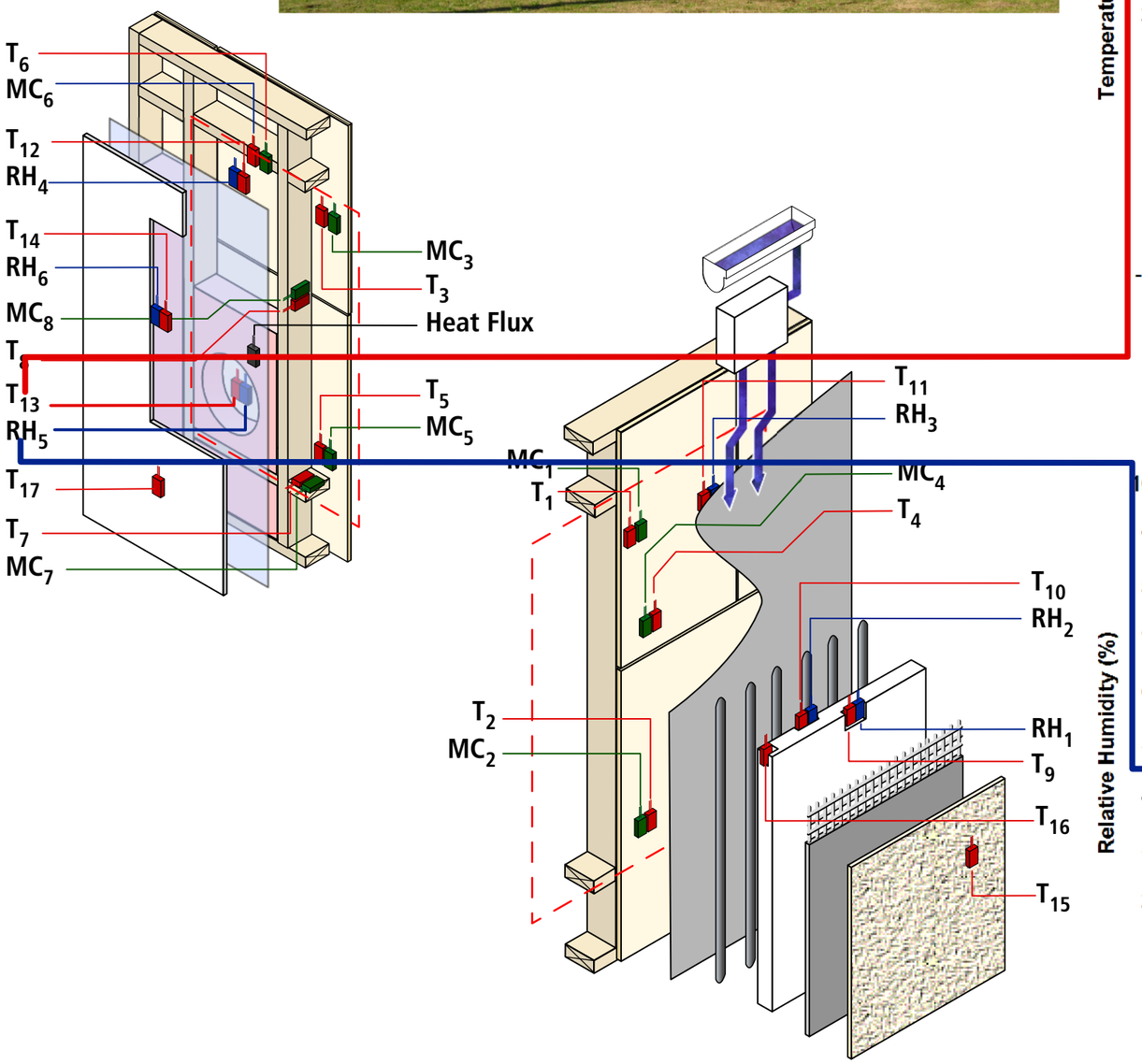
T_6
MC_6
T_{12}
RH_4
T_{14}
RH_6
MC_8
T_{13}
RH_5
T_{17}
T_7
MC_7
MC_3
T_3
Heat Flux
T_5
MC_5
MC_1
T_1
T_2
MC_2
T_{11}
RH_3
MC_4
T_4
T_{10}
RH_2
RH_1
T_9
T_{16}
T_{15}

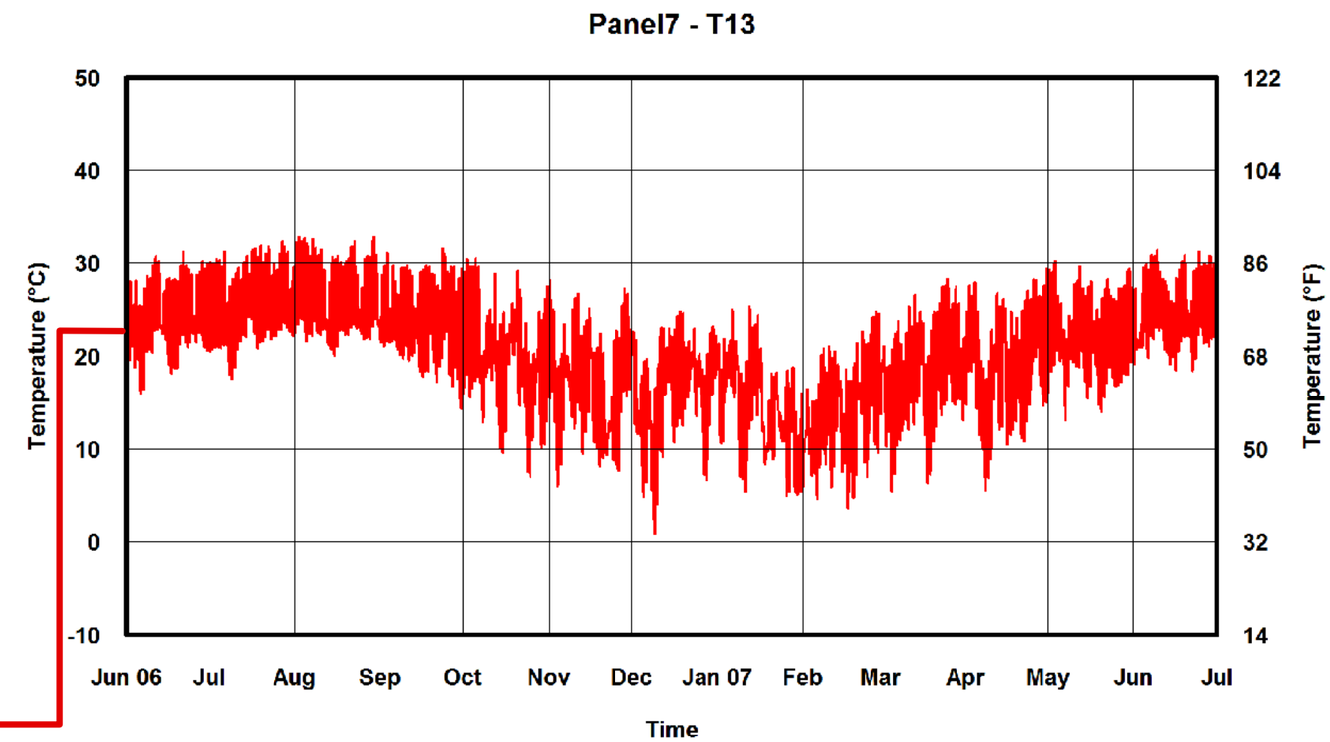
Panel7 - T13
Temperature (°C)
50
40
30
20
10
0
-10
Temperature (°F)
122
104
86
68
50
32
14
Jun 06
Jul
Aug
Sep
Oct
Nov
Dec
Jan 07
Feb
Mar
Apr
May
Jun
Jul
Time

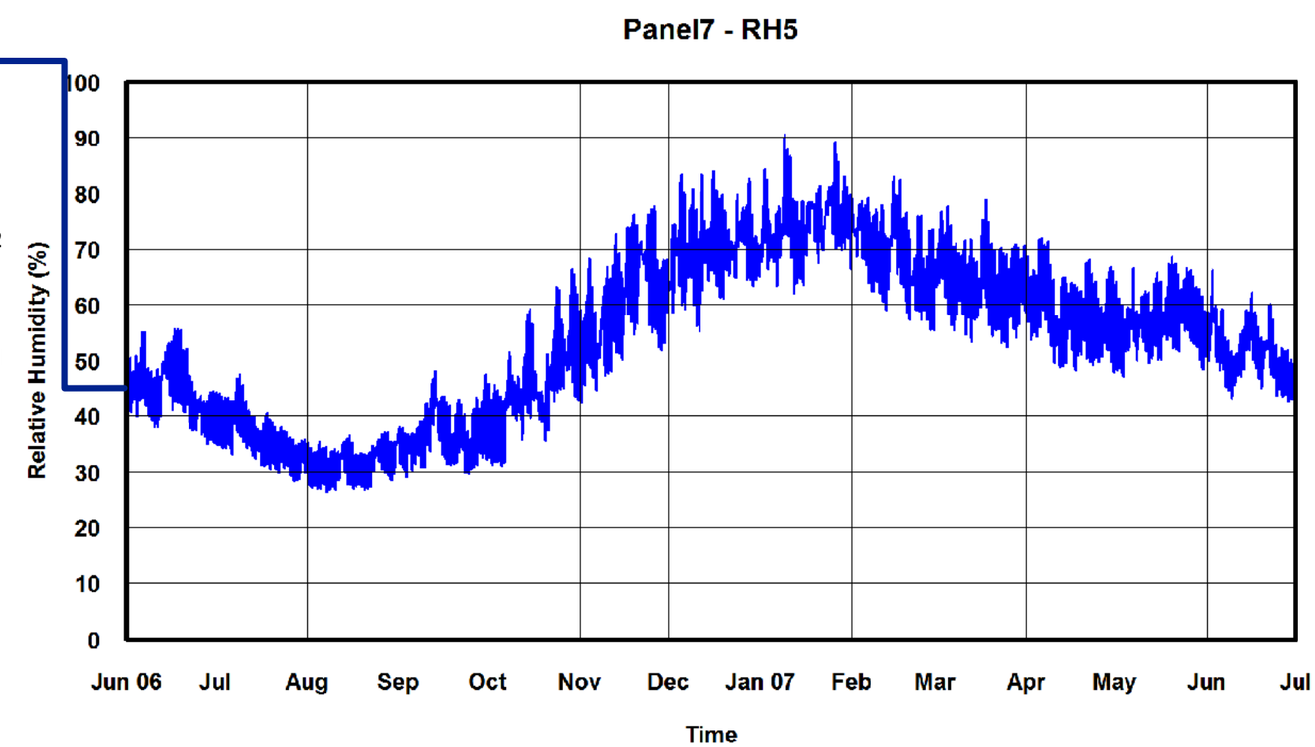
Panel7 - RH5
Relative Humidity (%)
100
90
80
70
60
50
40
30
20
10
0
Jun 06
Jul
Aug
Sep
Oct
Nov
Dec
Jan 07
Feb
Mar
Apr
May
Jun
Jul
Time

Panel 7

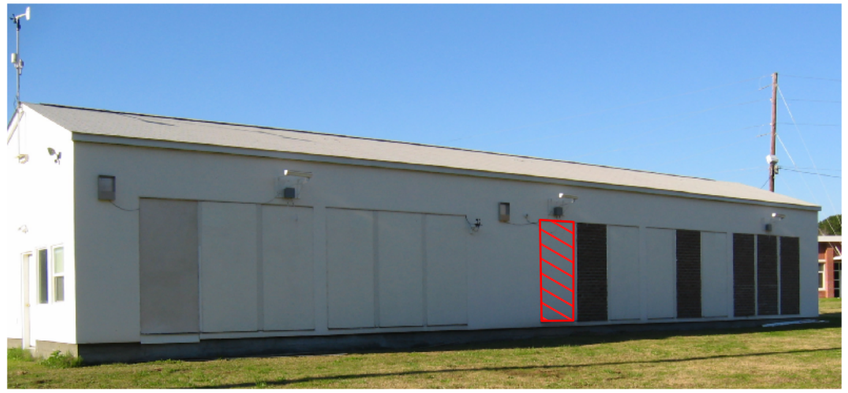

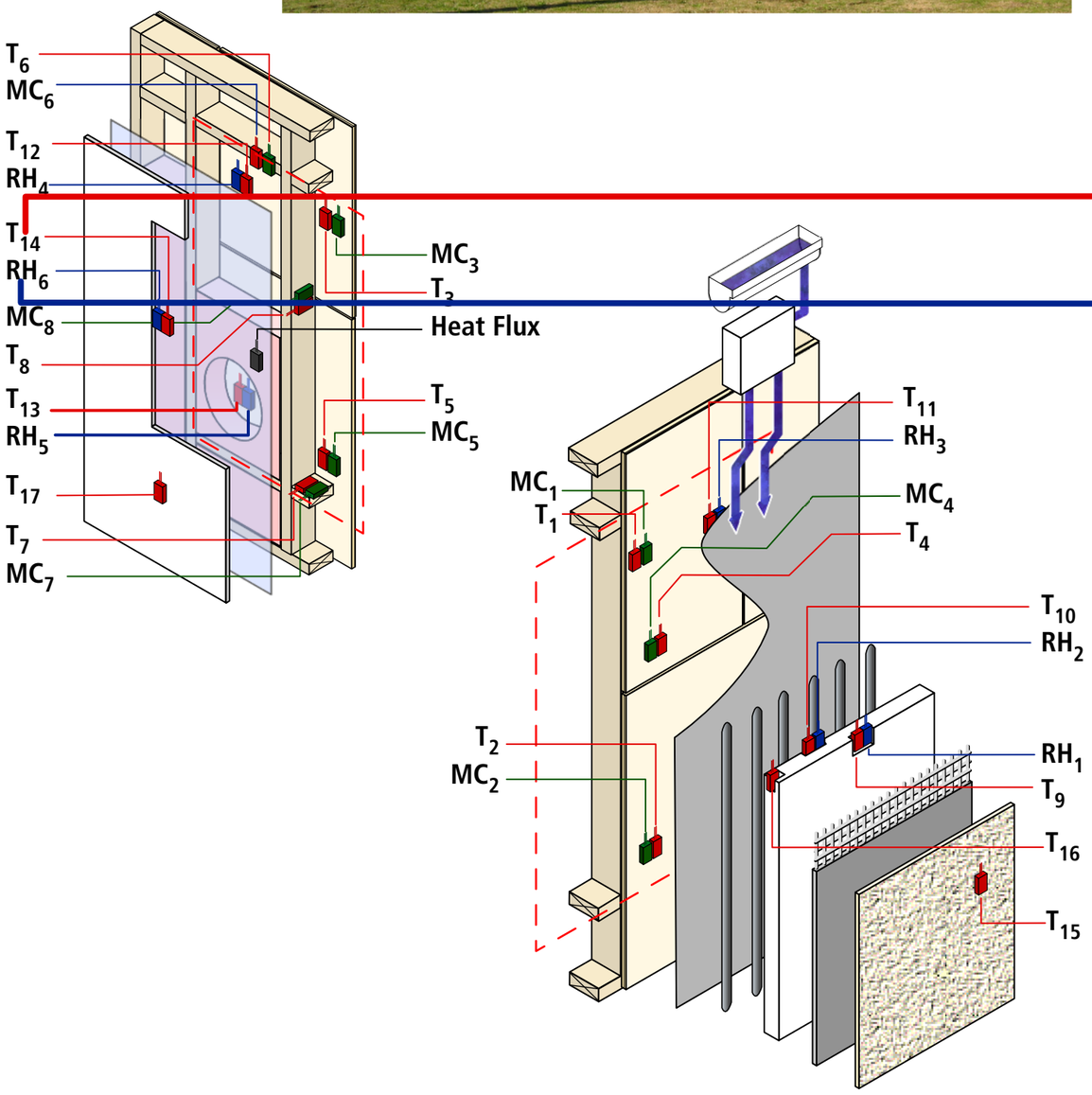
T_6
MC_6
T_{12}
RH_4
T_{14}
RH_6
MC_8
T_8
T_{13}
RH_5
T_{17}
T_7
MC_7
MC_3
T_3
Heat Flux
T_5
MC_5
T_{11}
RH_3
MC_1
T_1
MC_4
T_4
T_{10}
RH_2
T_2
MC_2
RH_1
T_9
T_{16}
T_{15}

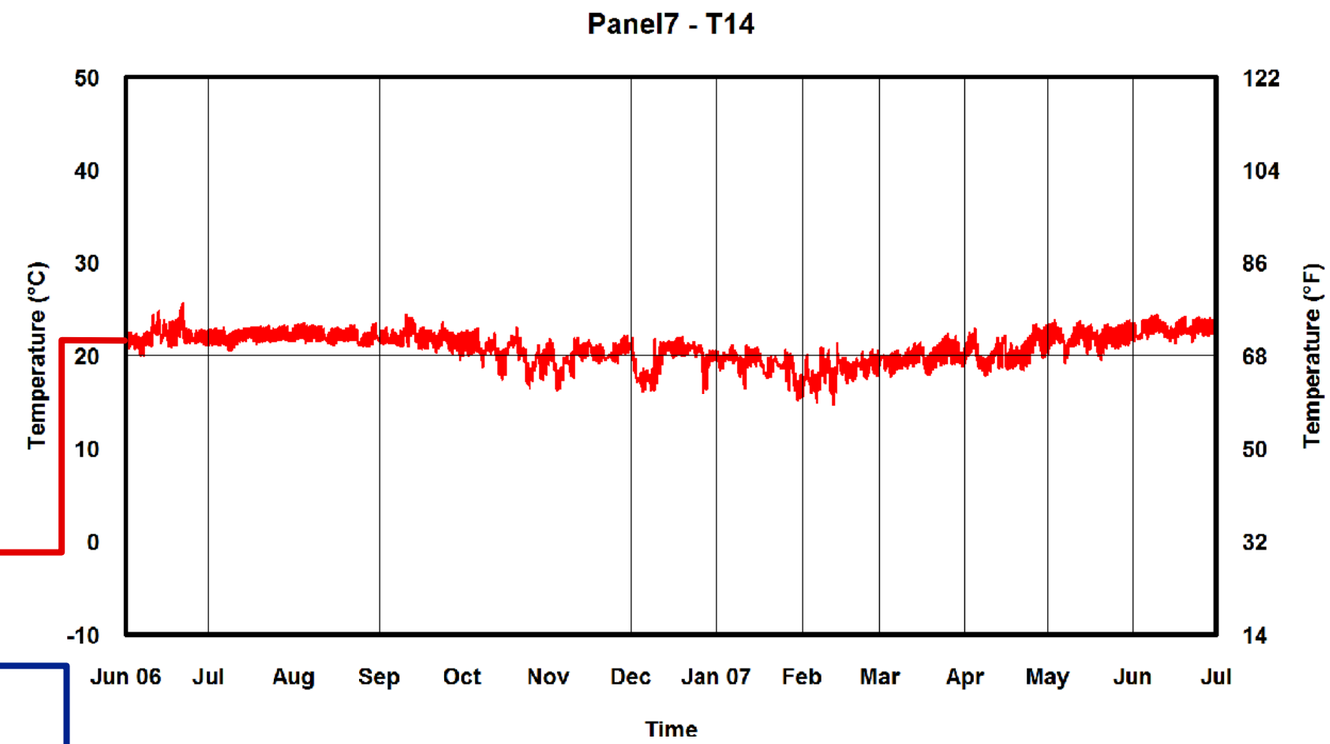
Panel7 - T14
Temperature (°C)
50
40
30
20
10
0
-10
Temperature (°F)
122
104
86
68
50
32
14
Jun 06
Jul
Aug
Sep
Oct
Nov
Dec
Jan 07
Feb
Mar
Apr
May
Jun
Jul
Time

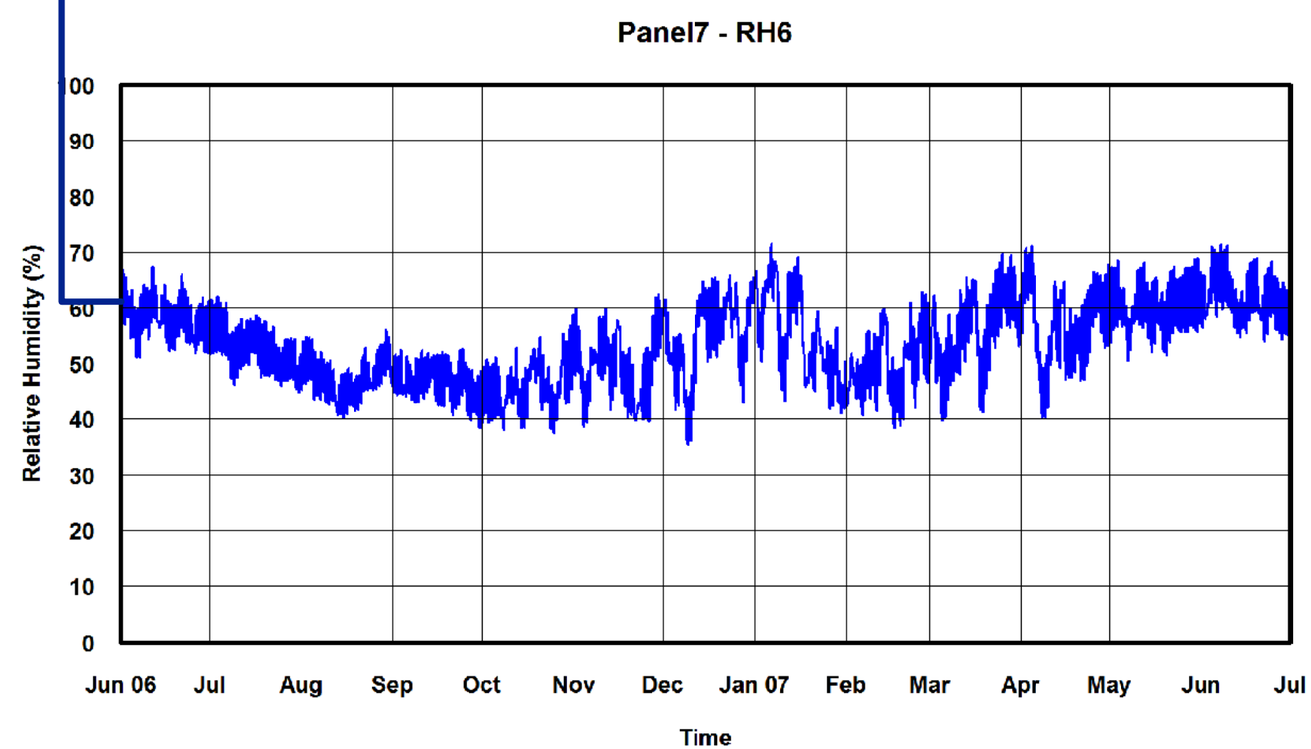
Panel7 - RH6
Relative Humidity (%)
100
90
80
70
60
50
40
30
20
10
0
Jun 06
Jul
Aug
Sep
Oct
Nov
Dec
Jan 07
Feb
Mar
Apr
May
Jun
Jul
Time

Panel 7

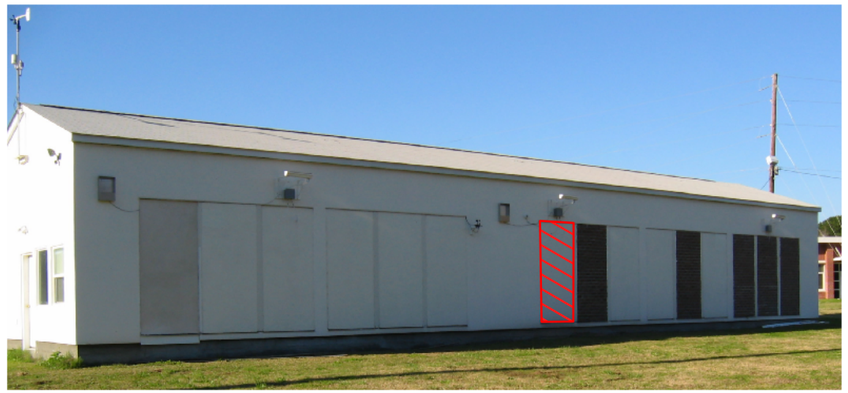

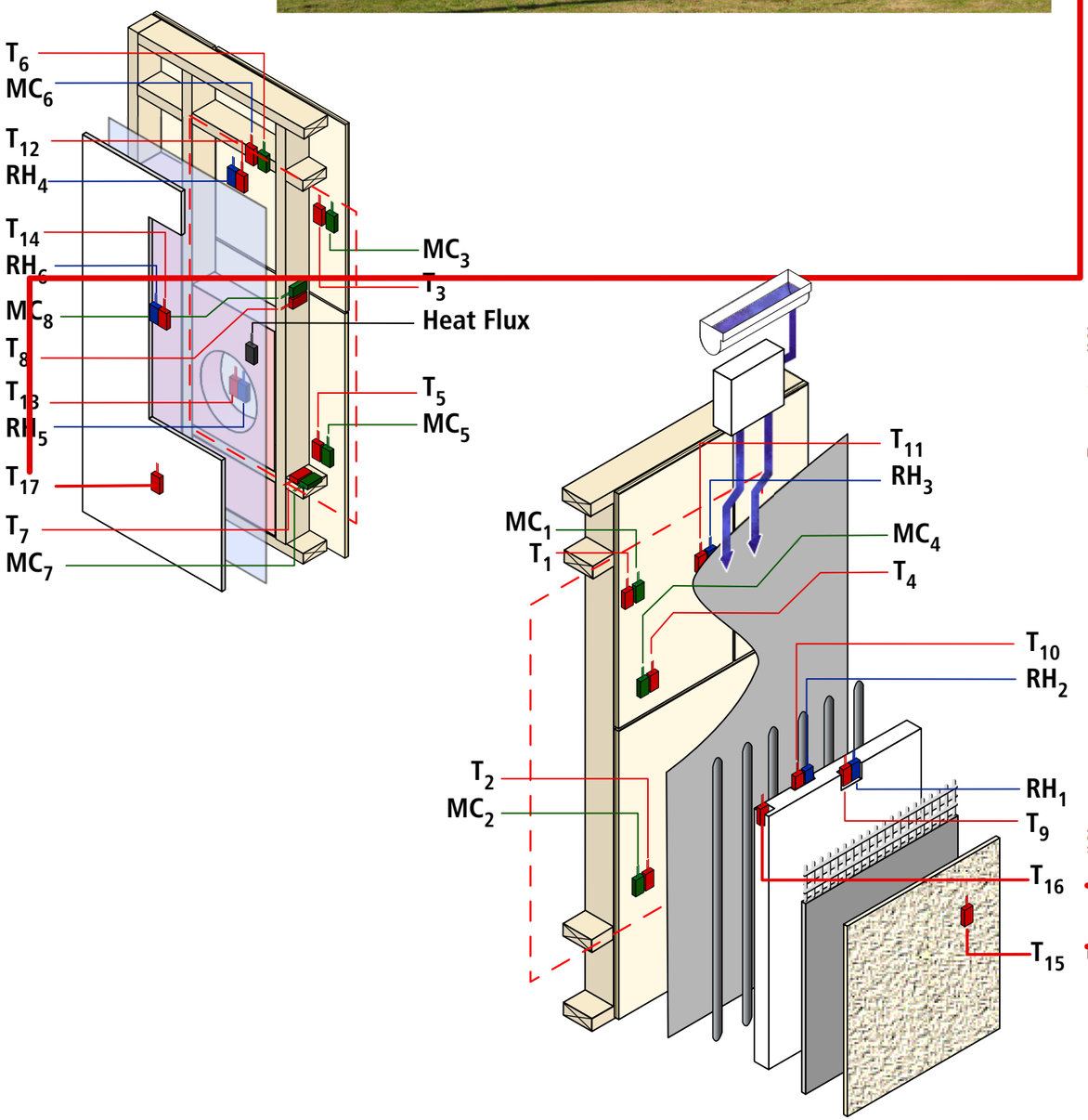
T_6
MC_6
T_{12}
RH_4
T_{14}
RH_6
MC_8
T_8
T_{13}
RH_5
T_{17}
T_7
MC_7
MC_3
T_3
Heat Flux
T_5
MC_5
T_{11}
RH_3
MC_1
T_1
MC_4
T_4
T_{10}
RH_2
T_2
MC_2
RH_1
T_9
T_{16}
T_{15}

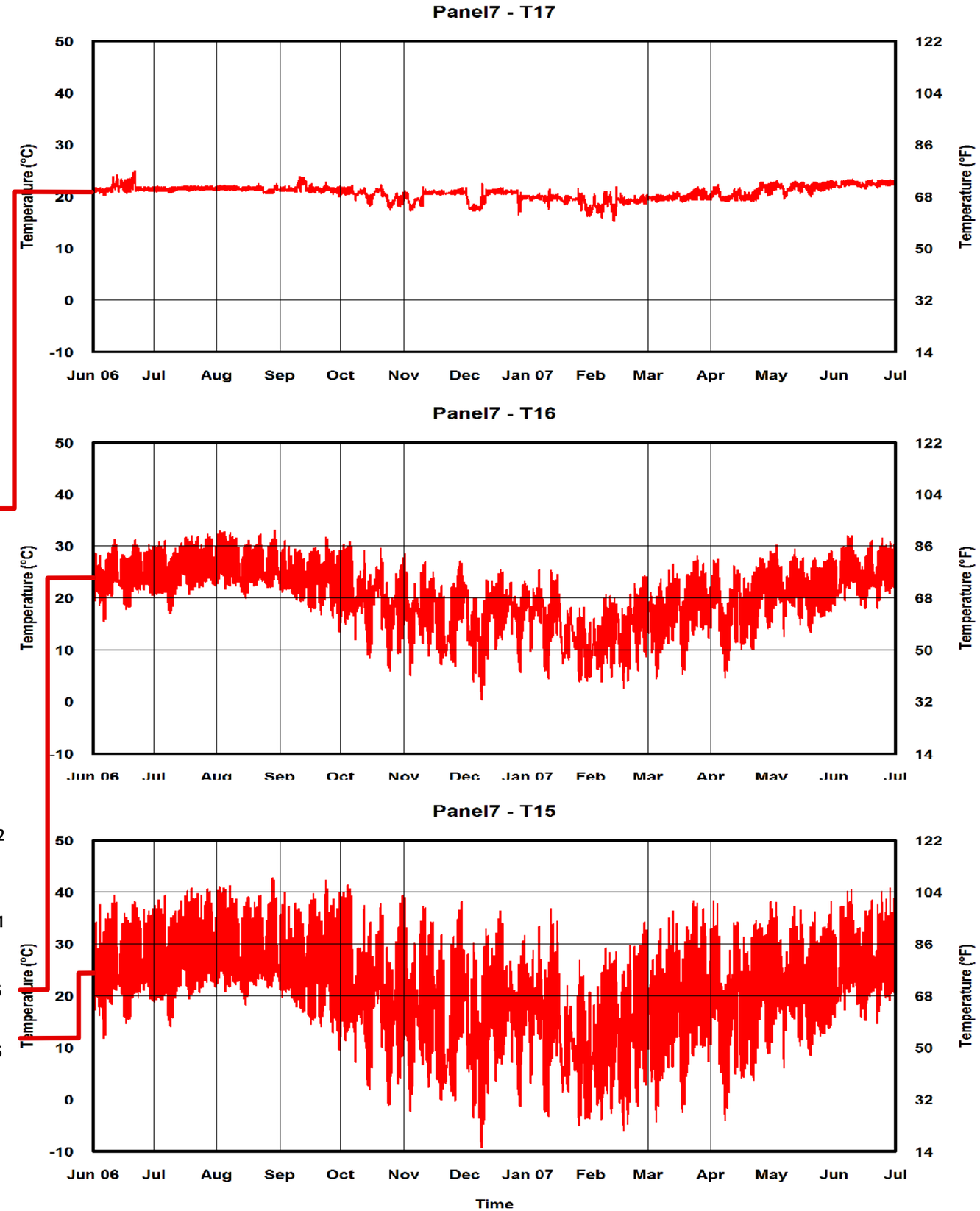
Panel7 - T17
Panel7 - T16
Panel7 - T15
Temperature (°C)
Temperature (°F)
50
40
30
20
10
0
-10
122
104
86
68
50
32
14
Jun 06
Jul
Aug
Sep
Oct
Nov
Dec
Jan 07
Feb
Mar
Apr
May
Jun
Jul
Time

Panel 7

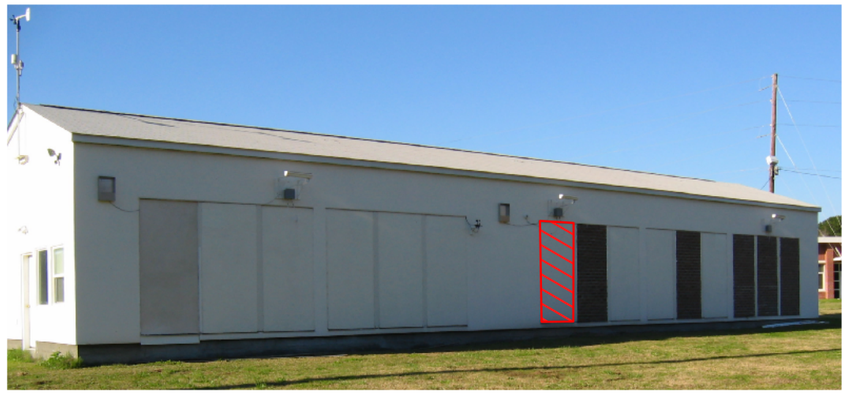

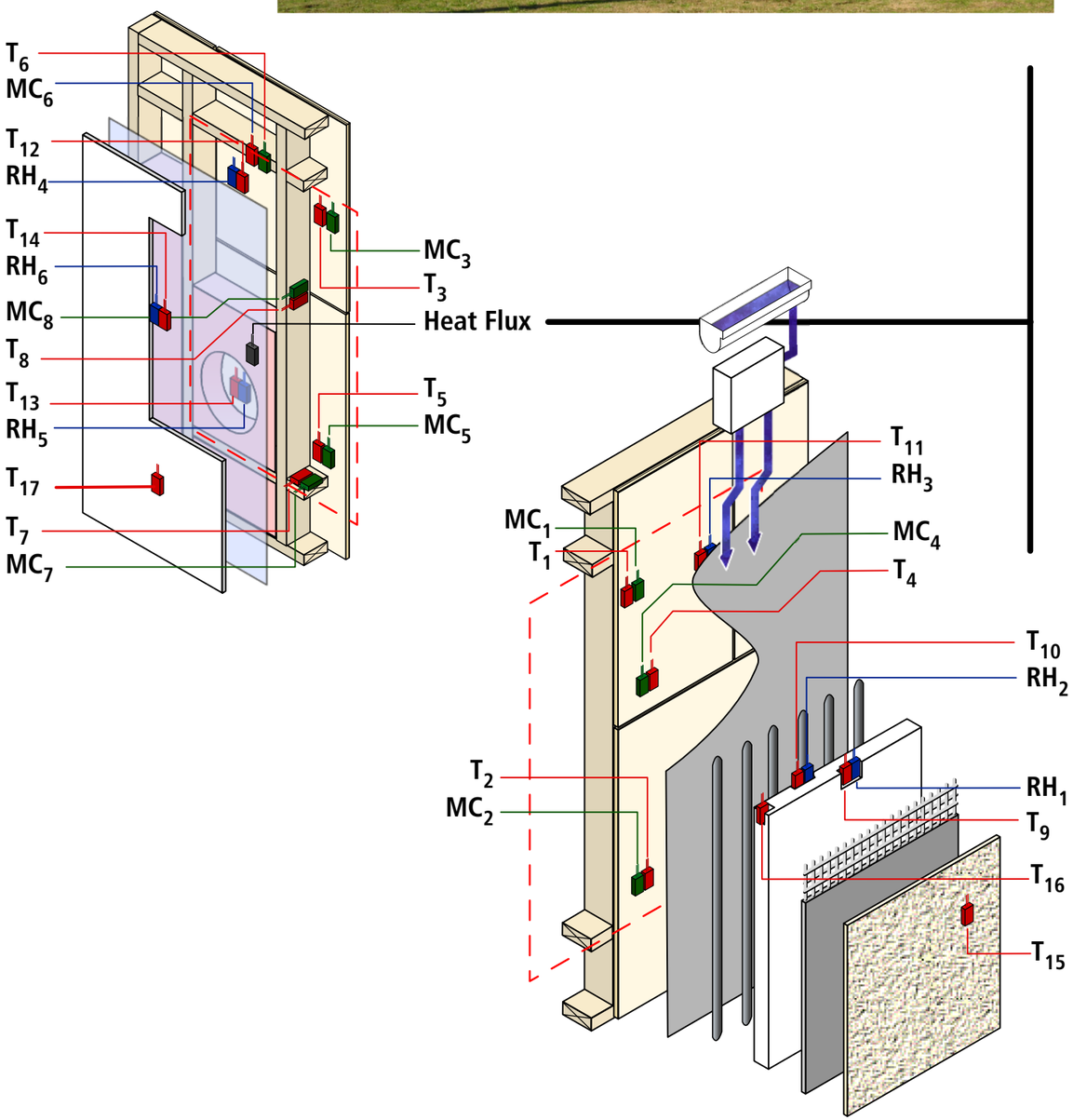
T_6
MC_6
T_{12}
RH_4
T_{14}
RH_6
MC_8
T_8
T_{13}
RH_5
T_{17}
T_7
MC_7
MC_3
T_3
Heat Flux
T_5
MC_5
T_{11}
RH_3
MC_1
T_1
MC_4
T_4
T_{10}
RH_2
T_2
MC_2
RH_1
T_9
T_{16}
T_{15}

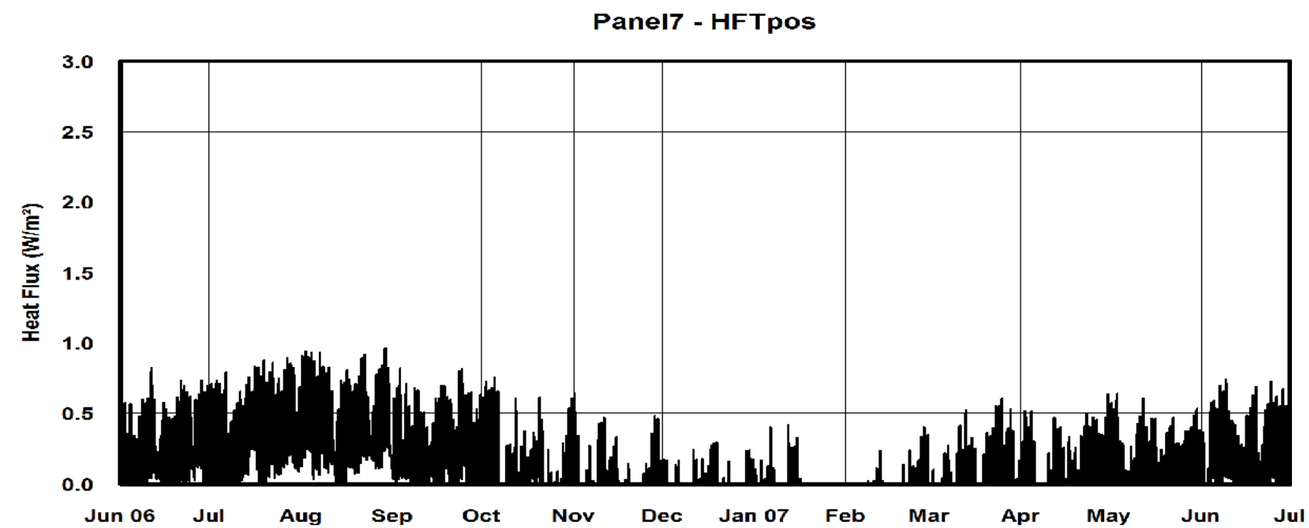
Panel7 - HFTpos
Heat Flux (W/m²)
3.0
2.5
2.0
1.5
1.0
0.5
0.0
Jun 06
Jul
Aug
Sep
Oct
Nov
Dec
Jan 07
Feb
Mar
Apr
May
Jun
Jul

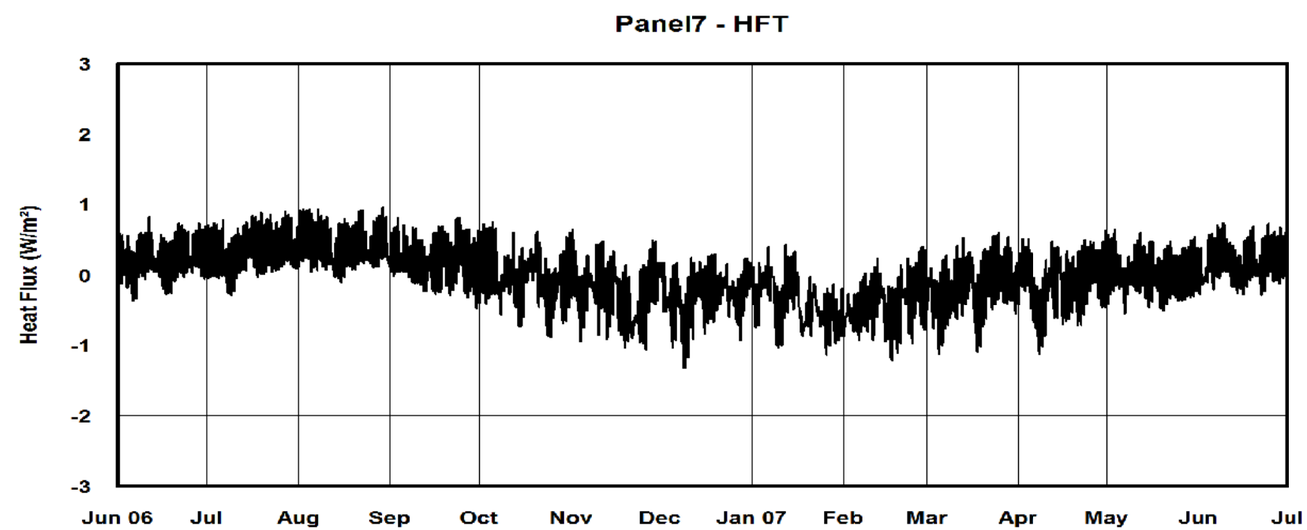
Panel7 - HFT
Heat Flux (W/m²)
3
2
1
0
-1
-2
-3
Jun 06
Jul
Aug
Sep
Oct
Nov
Dec
Jan 07
Feb
Mar
Apr
May
Jun
Jul

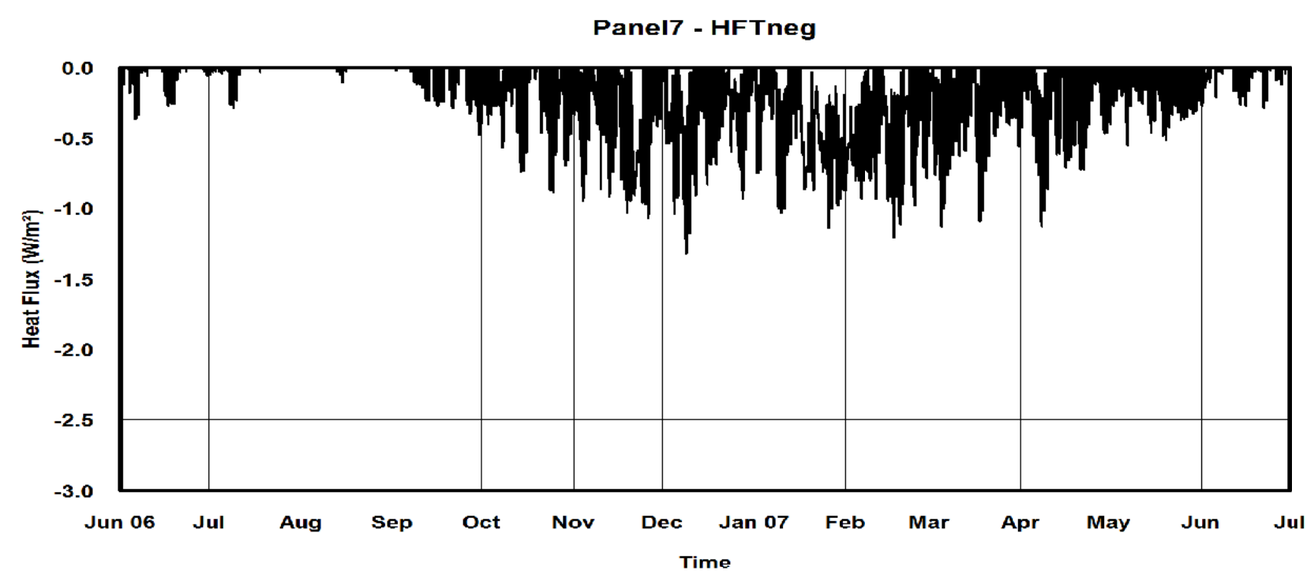
Panel7 - HFTneg
Heat Flux (W/m²)
0.0
-0.5
-1.0
-1.5
-2.0
-2.5
-3.0
Jun 06
Jul
Aug
Sep
Oct
Nov
Dec
Jan 07
Feb
Mar
Apr
May
Jun
Jul
Time

Panel 9

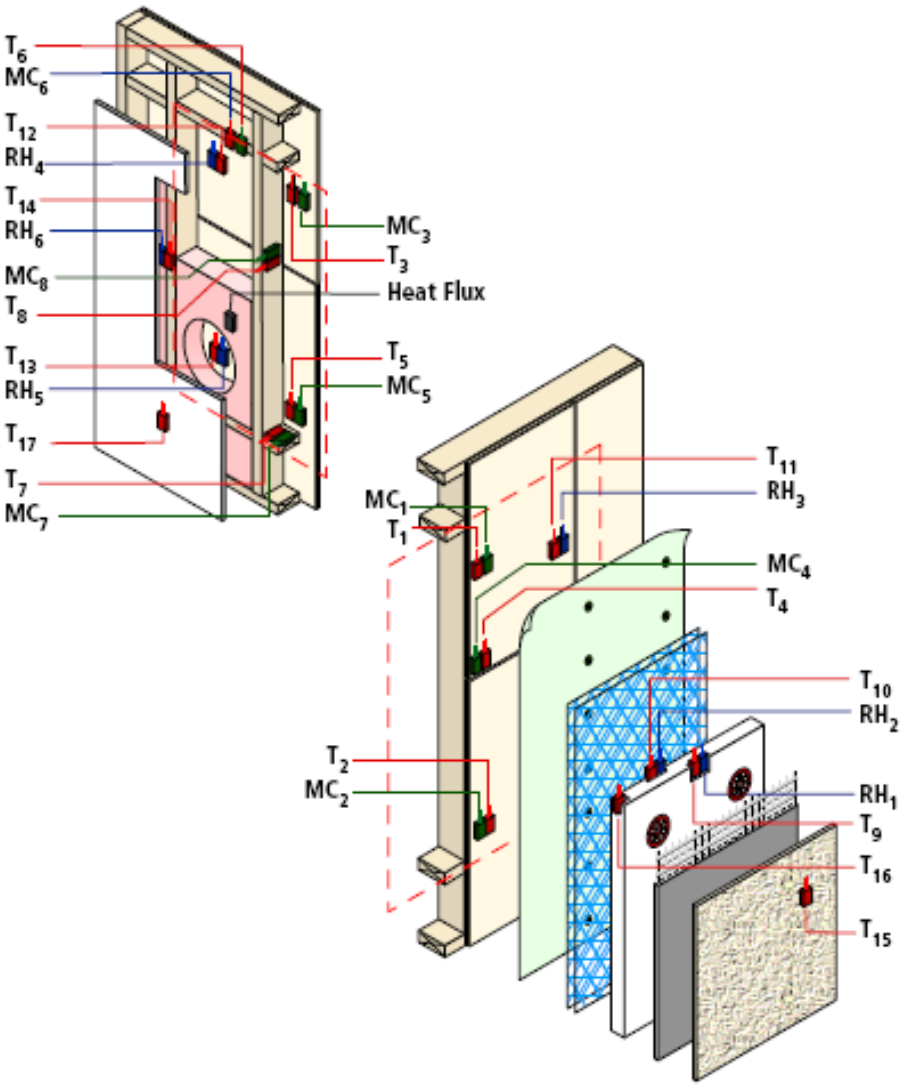
T_6
MC_6
T_{12}
RH_4
T_{14}
RH_6
MC_8
T_8
T_{13}
RH_5
T_{17}
T_7
MC_7
MC_3
T_3
Heat Flux
T_5
MC_5
T_{11}
RH_3
MC_1
T_1
MC_4
T_4
T_{10}
RH_2
T_2
MC_2
RH_1
T_9
T_{16}
T_{15}

Panel 9

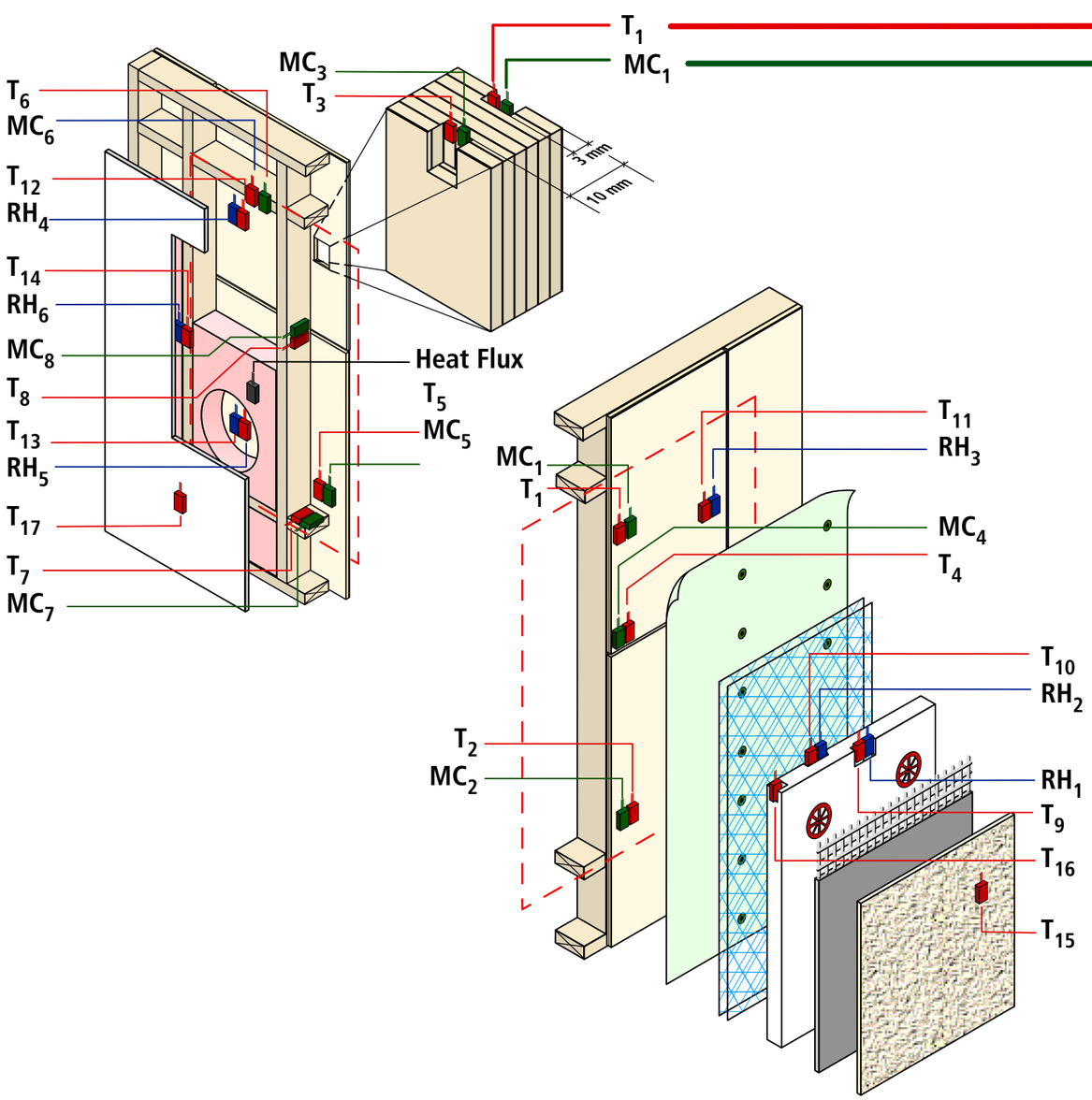
T_1
MC_1
MC_3
T_3
T_6
MC_6
T_{12}
RH_4
T_{14}
RH_6
MC_8
T_8
T_{13}
RH_5
T_{17}
T_7
MC_7
3 mm
10 mm
Heat Flux
T_5
MC_5
T_{11}
RH_3
MC_4
T_4
T_{10}
RH_2
RH_1
T_9
T_{16}
T_{15}
T_2
MC_2

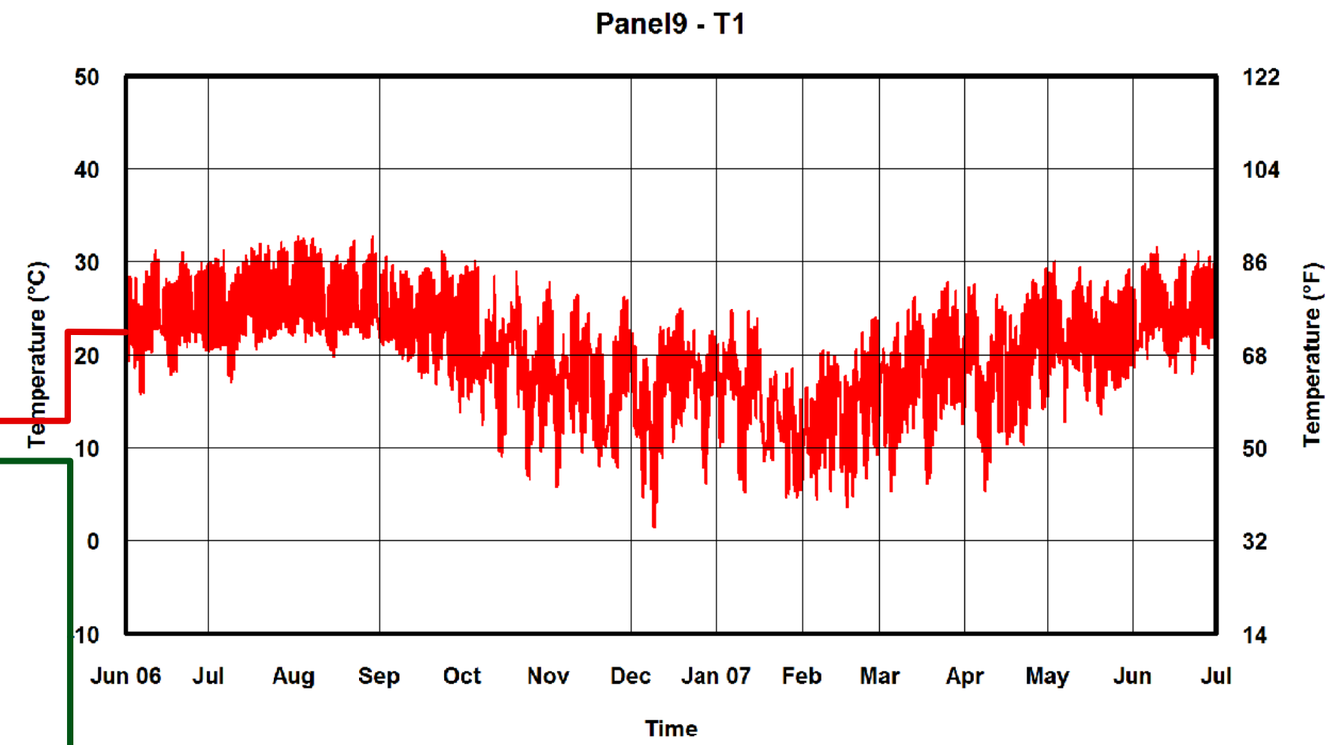
Panel9 - T1
Temperature (°C)
Temperature (°F)
50
40
30
20
10
0
-10
122
104
86
68
50
32
14
Jun 06
Jul
Aug
Sep
Oct
Nov
Dec
Jan 07
Feb
Mar
Apr
May
Jun
Jul
Time

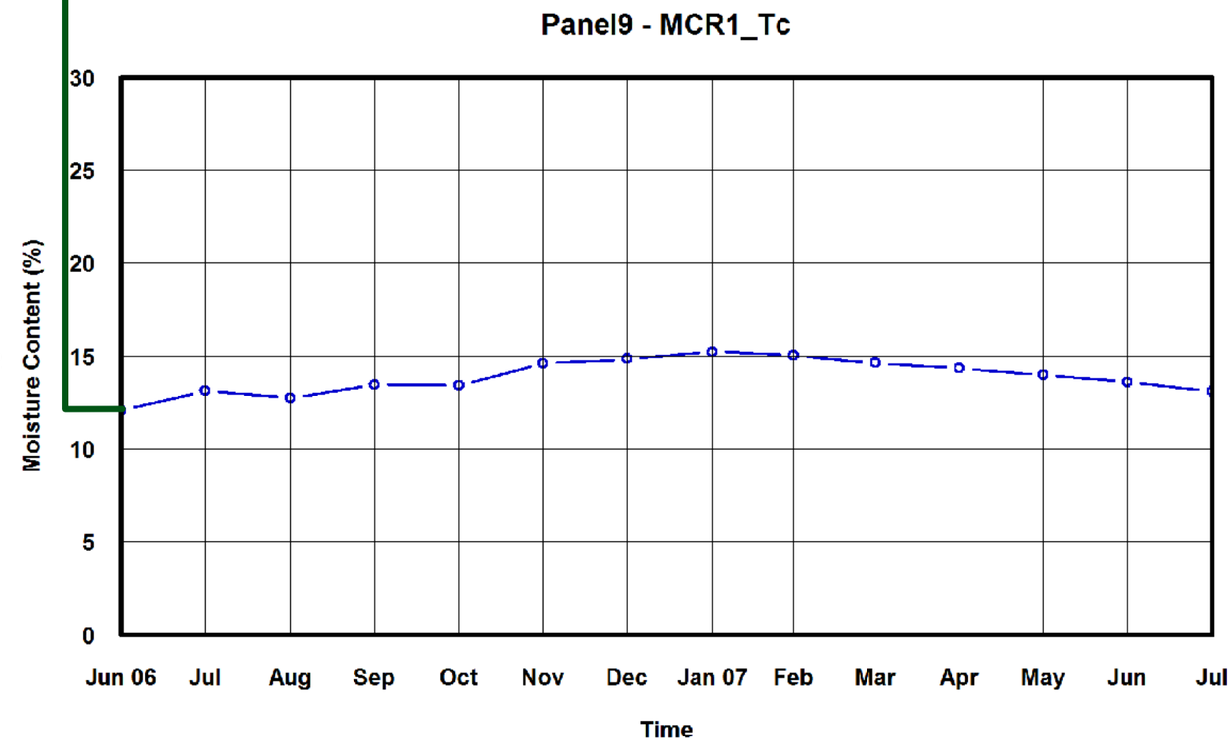
Panel9 - MCR1_Tc
Moisture Content (%)
30
25
20
15
10
5
0
Jun 06
Jul
Aug
Sep
Oct
Nov
Dec
Jan 07
Feb
Mar
Apr
May
Jun
Jul
Time

Panel 9

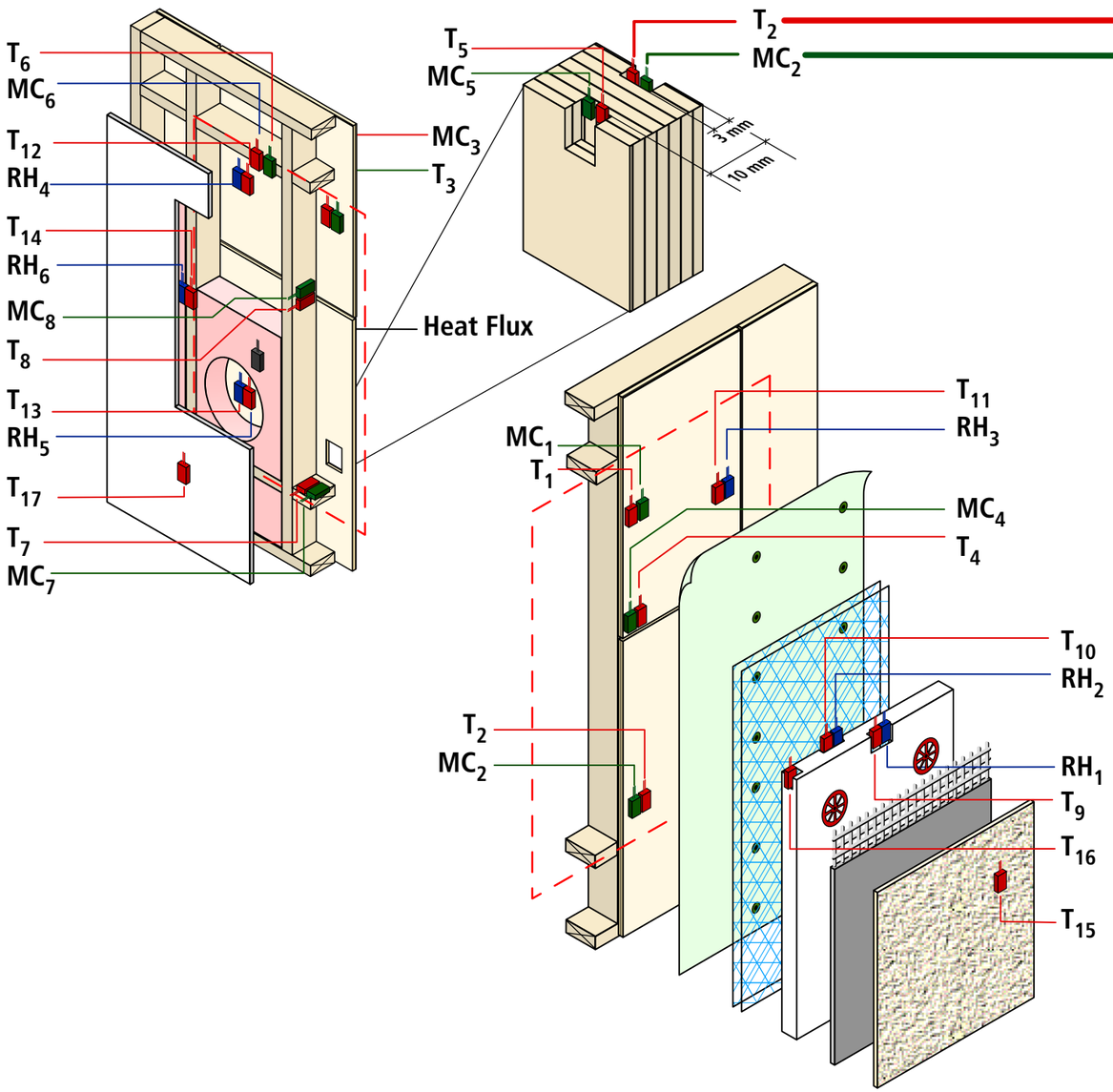
T_6
MC_6
T_{12}
RH_4
T_{14}
RH_6
MC_8
T_8
T_{13}
RH_5
T_{17}
T_7
MC_7
T_5
MC_5
MC_3
T_3
Heat Flux
T_2
MC_2
3 mm
10 mm
T_{11}
RH_3
MC_1
T_1
MC_4
T_4
T_{10}
RH_2
T_2
MC_2
RH_1
T_9
T_{16}
T_{15}

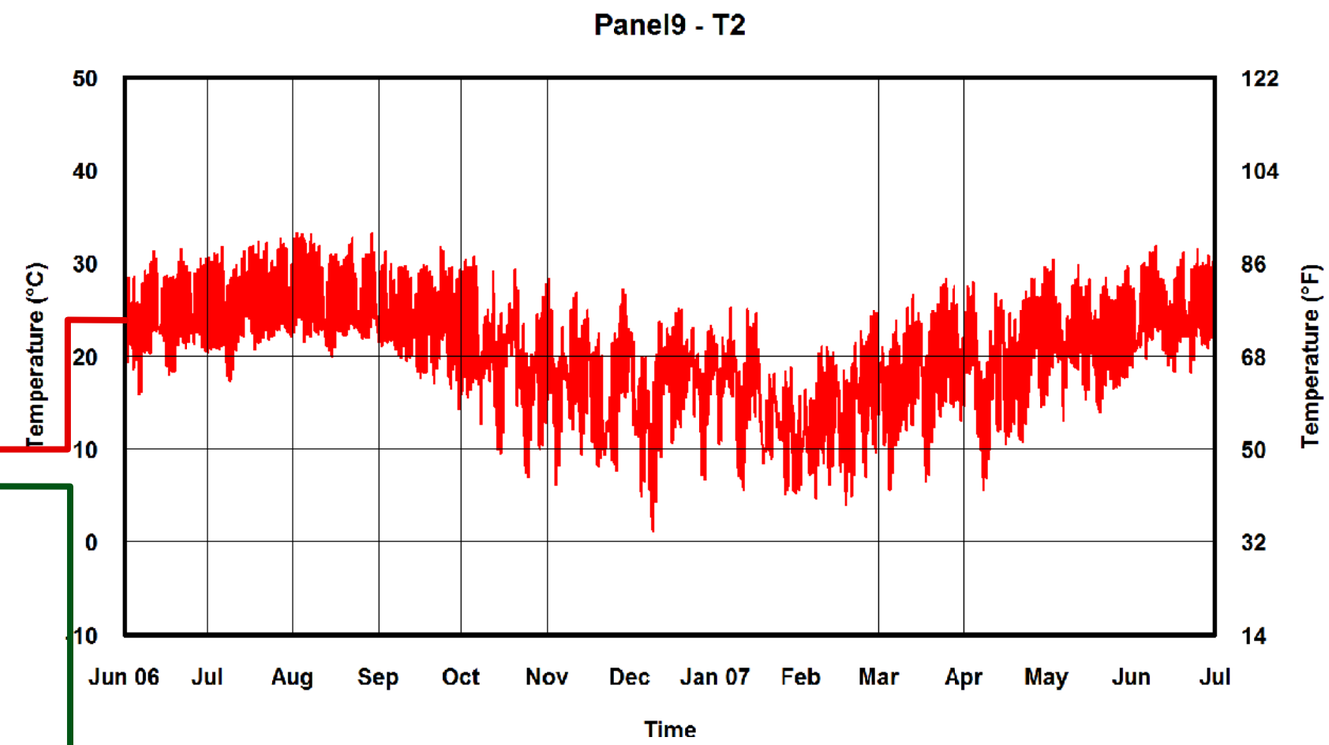
Panel9 - T2
Temperature (°C)
Temperature (°F)
50
40
30
20
10
0
-10
122
104
86
68
50
32
14
Jun 06
Jul
Aug
Sep
Oct
Nov
Dec
Jan 07
Feb
Mar
Apr
May
Jun
Jul
Time

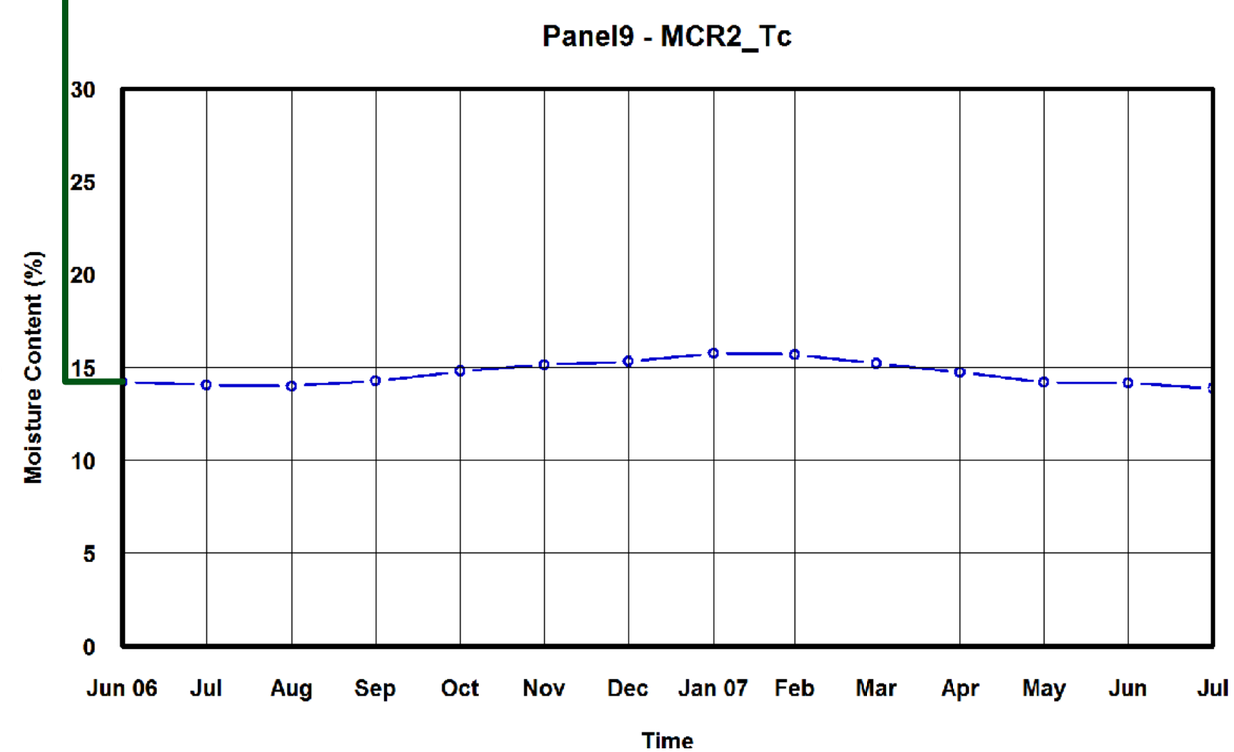
Panel9 - MCR2_Tc
Moisture Content (%)
30
25
20
15
10
5
0
Jun 06
Jul
Aug
Sep
Oct
Nov
Dec
Jan 07
Feb
Mar
Apr
May
Jun
Jul
Time

Panel 9

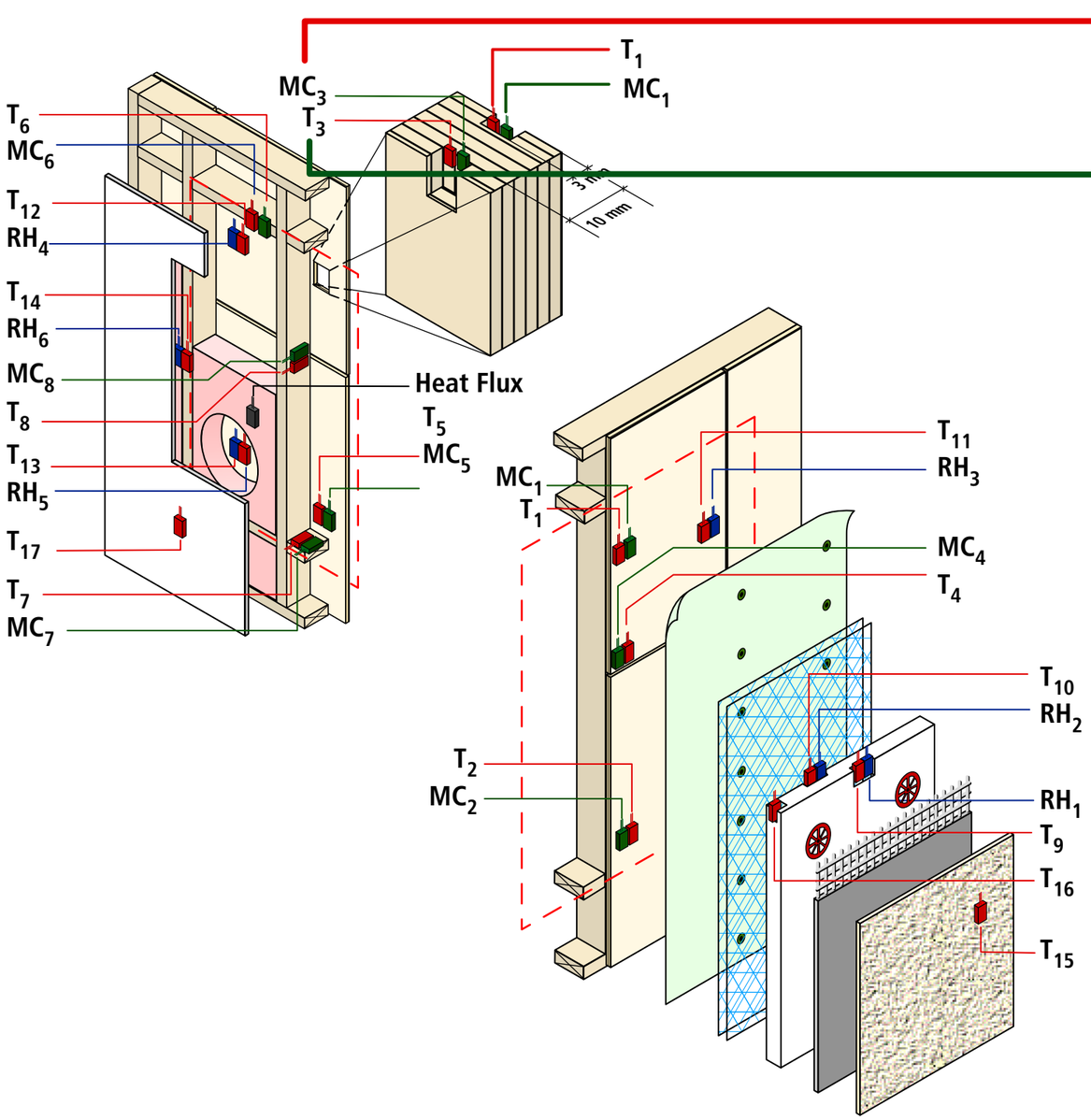
T_1
MC_1
MC_3
T_3
T_6
MC_6
T_{12}
RH_4
T_{14}
RH_6
MC_8
T_8
T_{13}
RH_5
T_{17}
T_7
MC_7
3 mm
10 mm
Heat Flux
T_5
MC_5
MC_1
T_1
T_{11}
RH_3
MC_4
T_4
T_{10}
RH_2
T_2
MC_2
RH_1
T_9
T_{16}
T_{15}

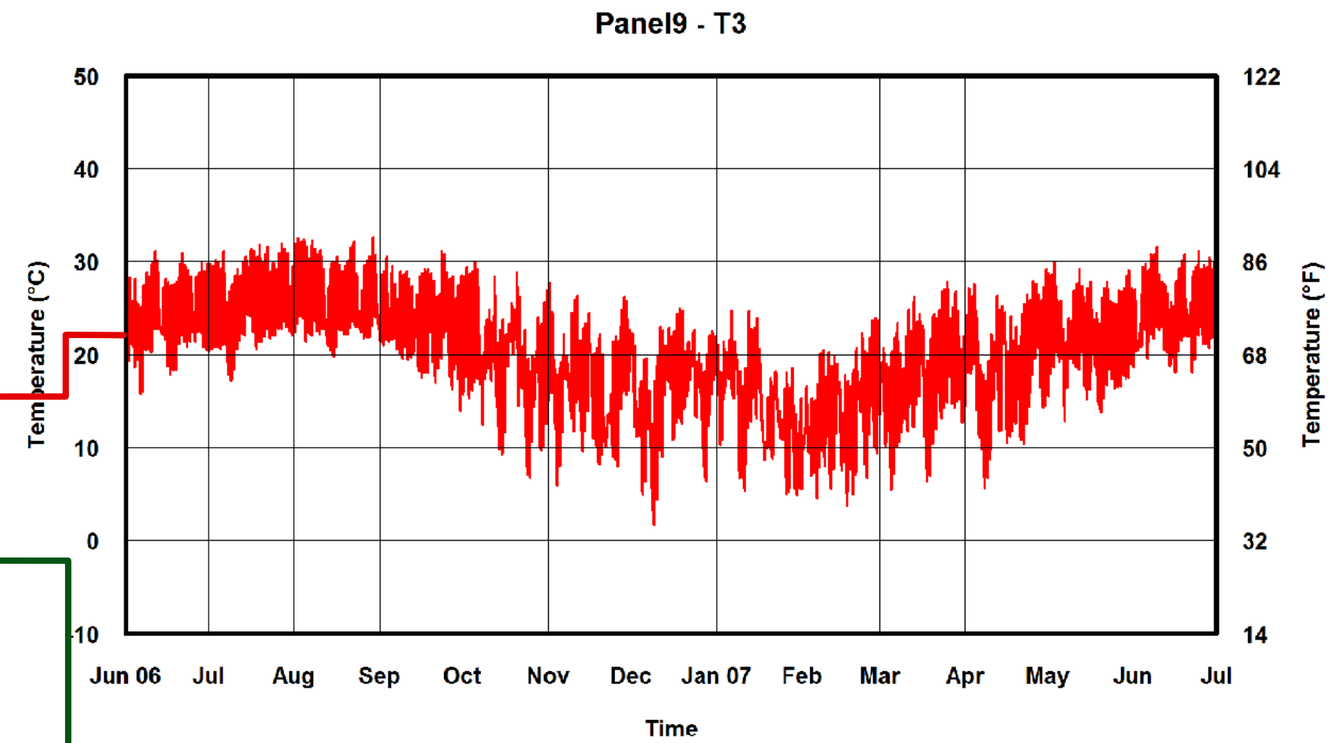
Panel9 - T3
Temperature (°C)
Temperature (°F)
50
40
30
20
10
0
-10
122
104
86
68
50
32
14
Jun 06
Jul
Aug
Sep
Oct
Nov
Dec
Jan 07
Feb
Mar
Apr
May
Jun
Jul
Time

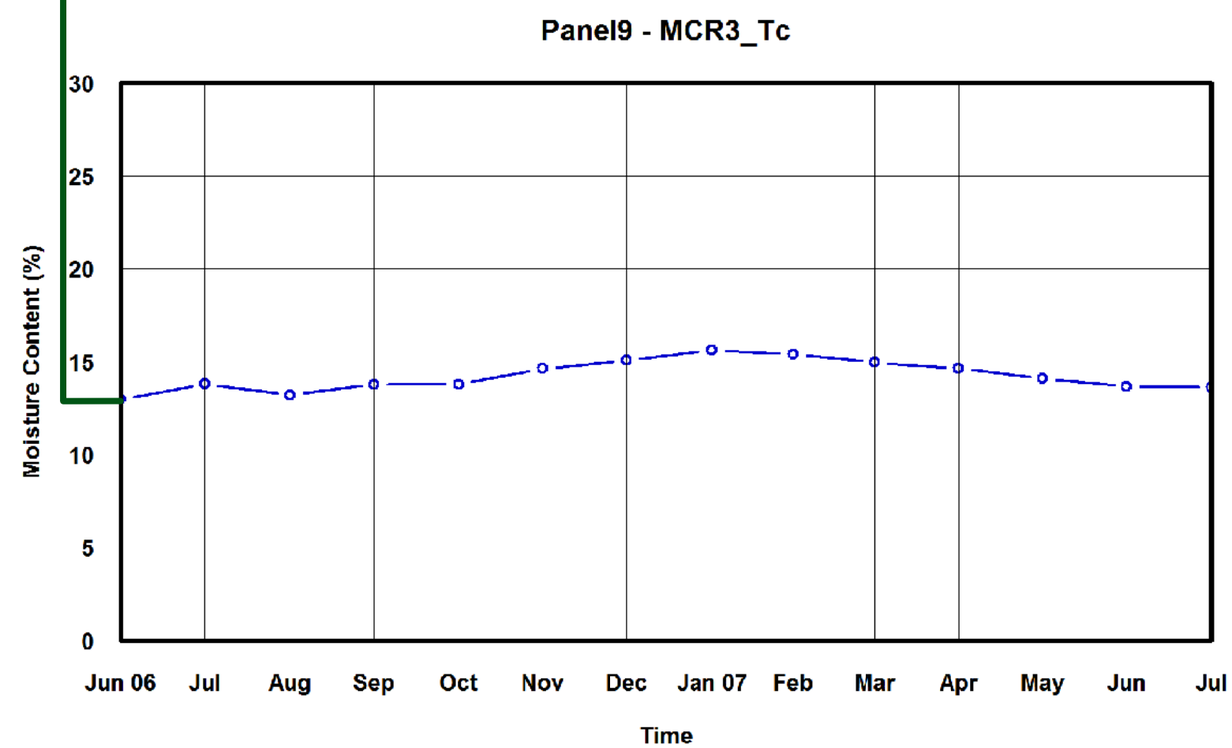
Panel9 - MCR3_Tc
Moisture Content (%)
30
25
20
15
10
5
0
Jun 06
Jul
Aug
Sep
Oct
Nov
Dec
Jan 07
Feb
Mar
Apr
May
Jun
Jul
Time

Panel 9

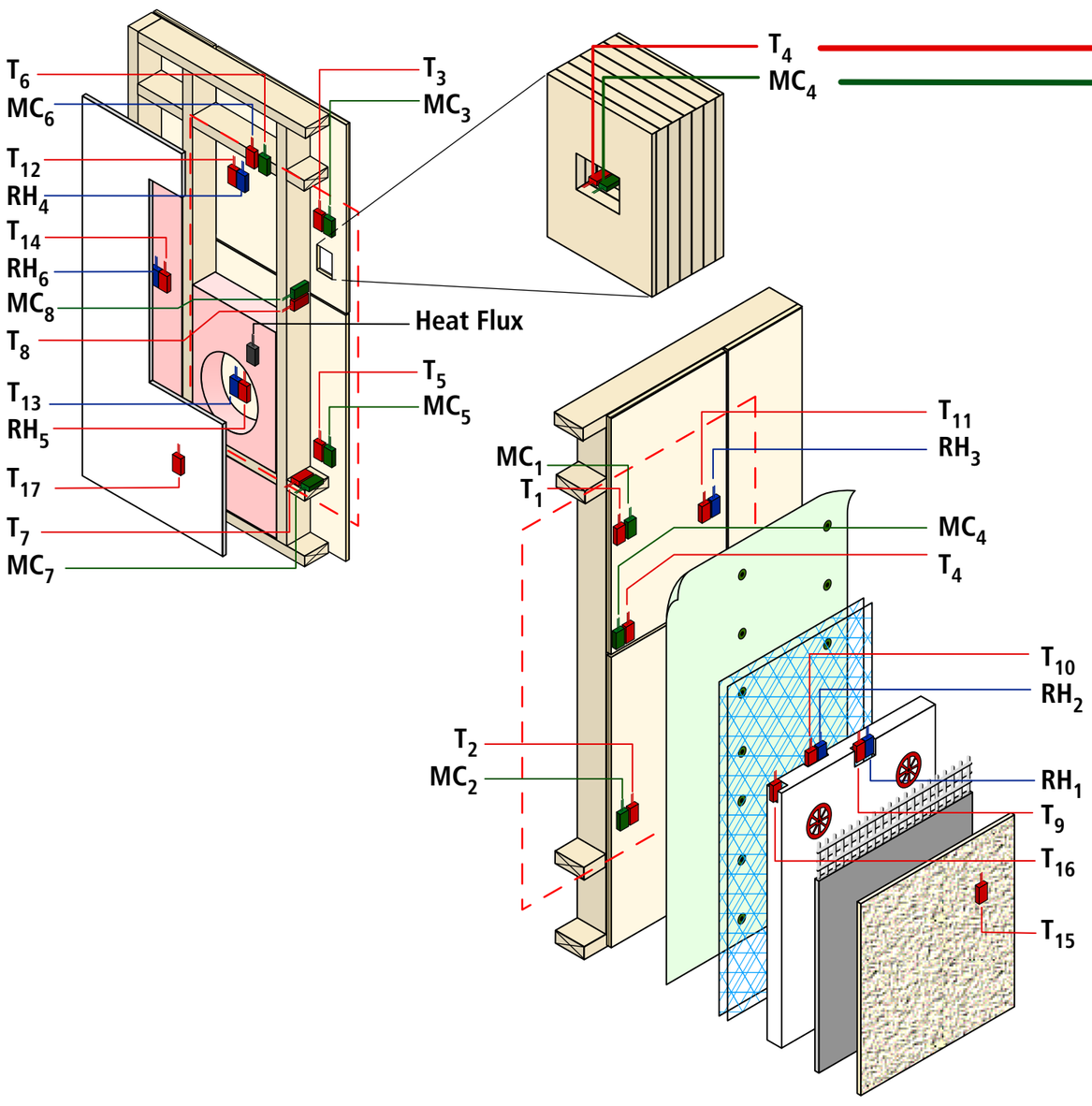
T_6
MC_6
T_{12}
RH_4
T_{14}
RH_6
MC_8
T_8
T_{13}
RH_5
T_{17}
T_7
MC_7
T_3
MC_3
Heat Flux
T_5
MC_5
T_4
MC_4
MC_1
T_1
T_2
MC_2
T_{11}
RH_3
MC_4
T_4
T_{10}
RH_2
RH_1
T_9
T_{16}
T_{15}

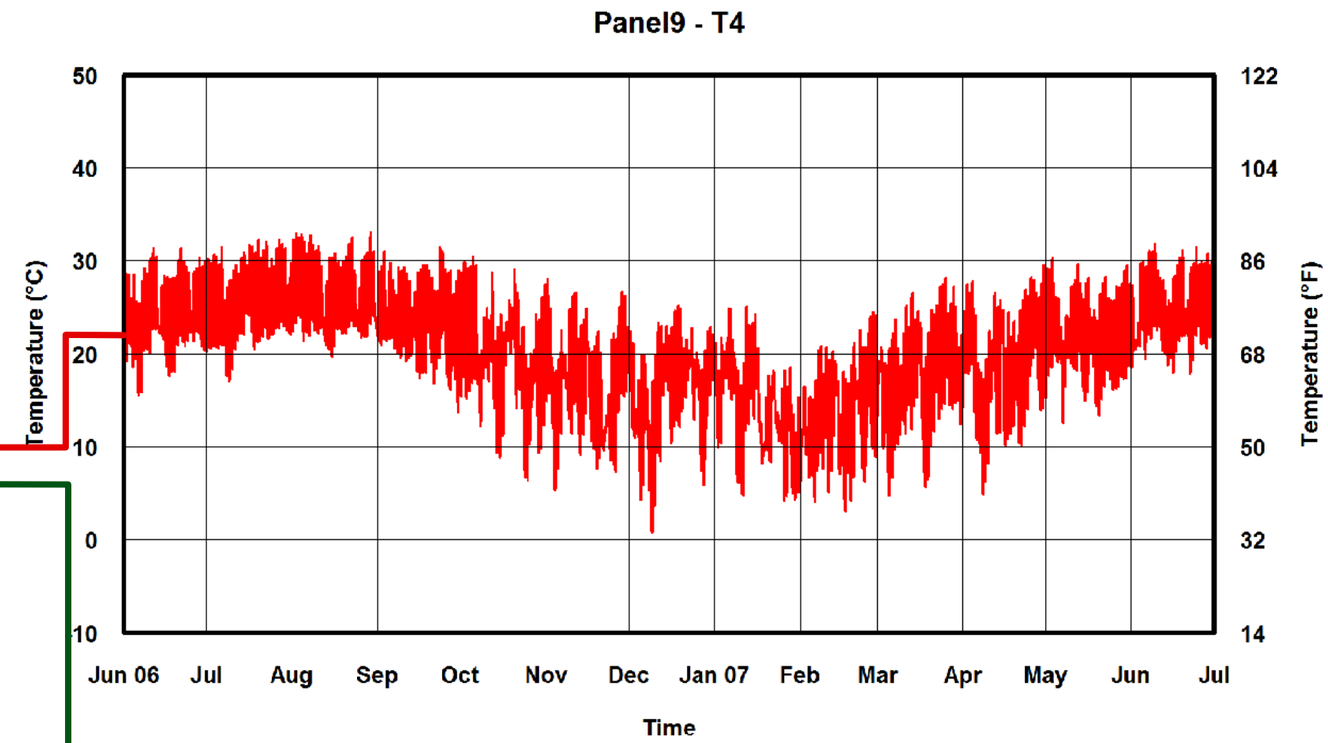
Panel9 - T4
Temperature (°C)
50
40
30
20
10
0
-10
Temperature (°F)
122
104
86
68
50
32
14
Jun 06
Jul
Aug
Sep
Oct
Nov
Dec
Jan 07
Feb
Mar
Apr
May
Jun
Jul
Time

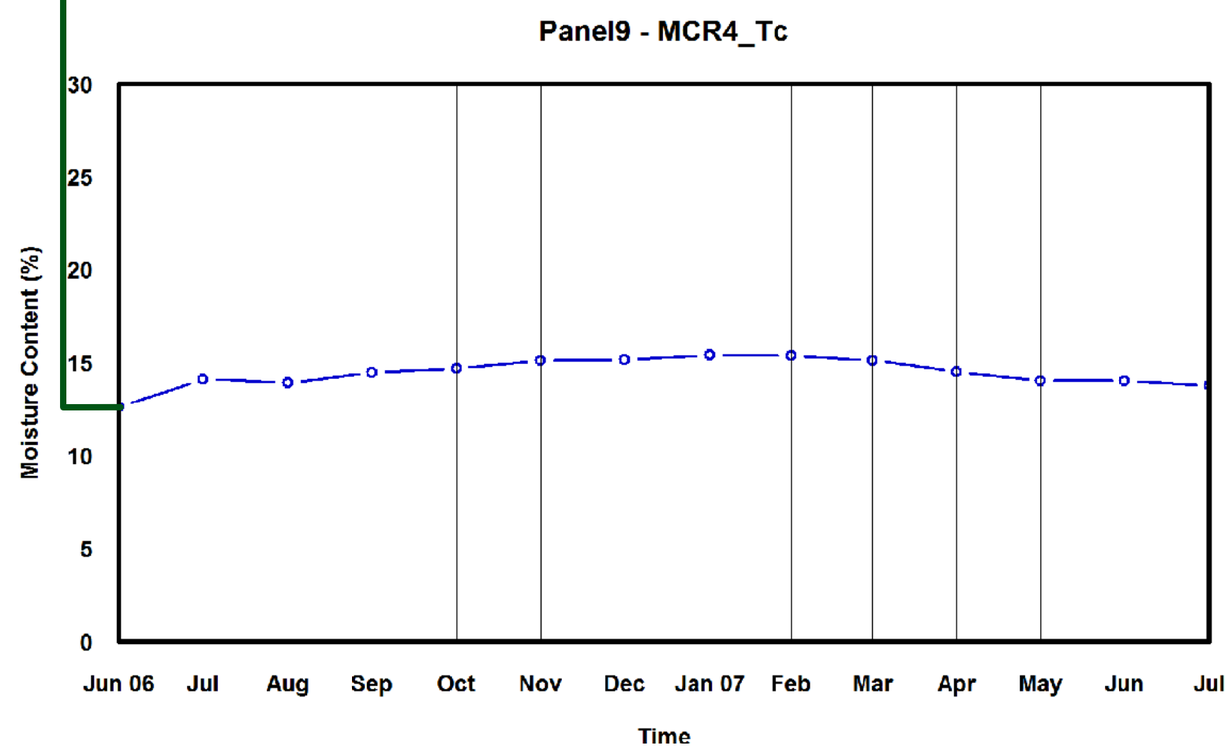
Panel9 - MCR4_Tc
Moisture Content (%)
30
25
20
15
10
5
0
Jun 06
Jul
Aug
Sep
Oct
Nov
Dec
Jan 07
Feb
Mar
Apr
May
Jun
Jul
Time

Panel 9

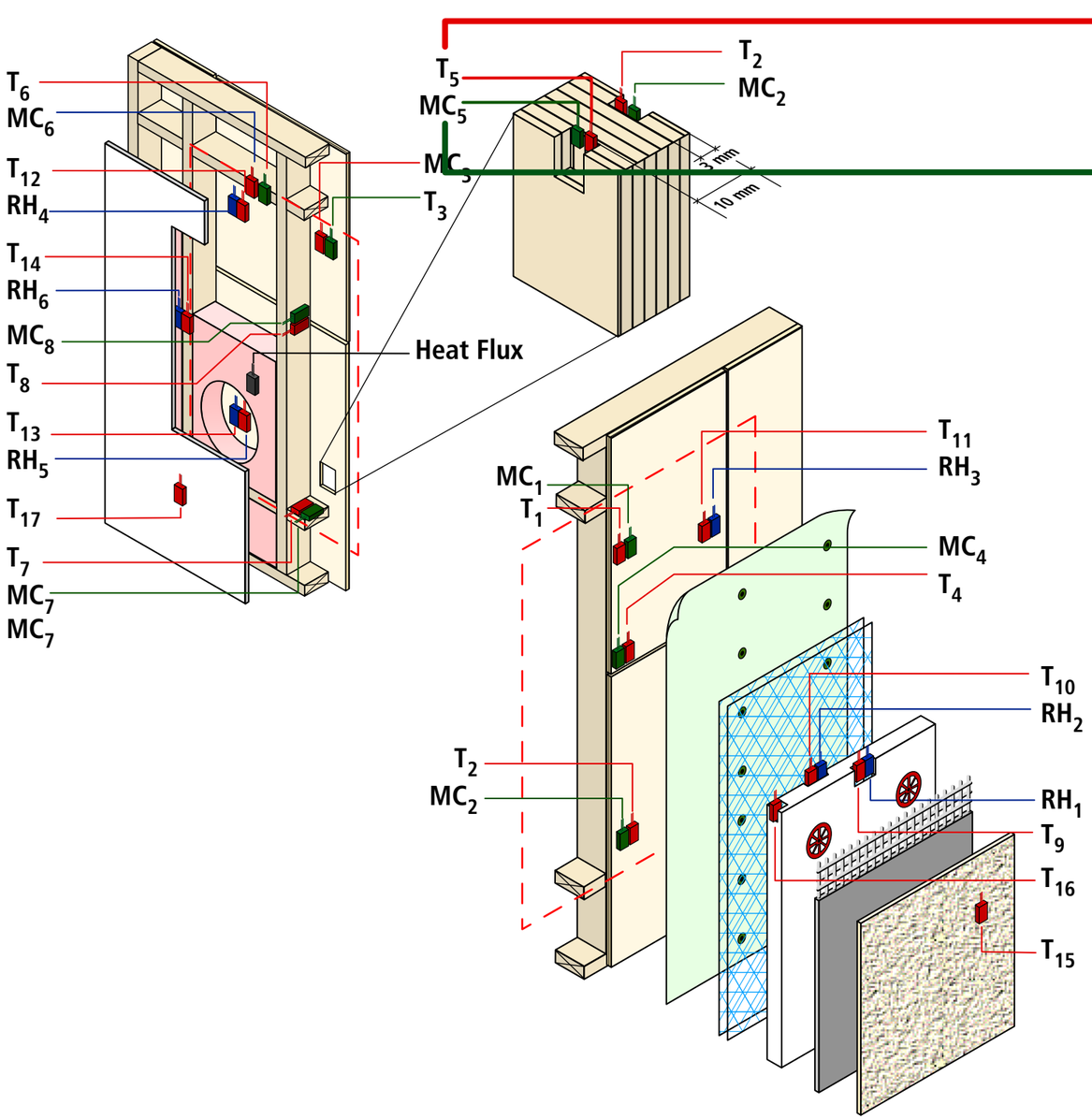
T_6
MC_6
T_{12}
RH_4
T_{14}
RH_6
MC_8
T_8
T_{13}
RH_5
T_{17}
T_7
MC_7
MC_7
T_5
MC_5
MC_3
T_3
T_2
MC_2
33 mm
10 mm
Heat Flux
MC_1
T_1
T_{11}
RH_3
MC_4
T_4
T_{10}
RH_2
T_2
MC_2
RH_1
T_9
T_{16}
T_{15}

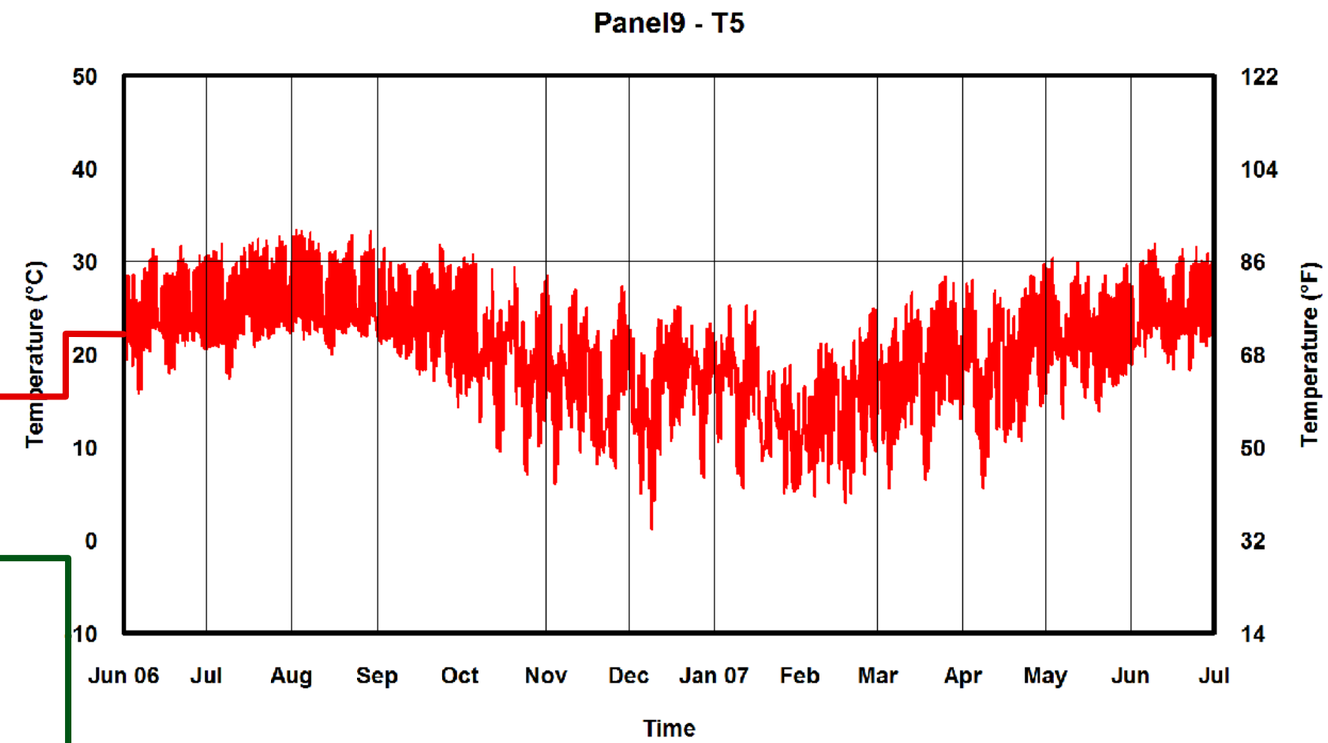
Panel9 - T5
Temperature (°C)
Temperature (°F)
50
40
30
20
10
0
-10
122
104
86
68
50
32
14
Jun 06
Jul
Aug
Sep
Oct
Nov
Dec
Jan 07
Feb
Mar
Apr
May
Jun
Jul
Time

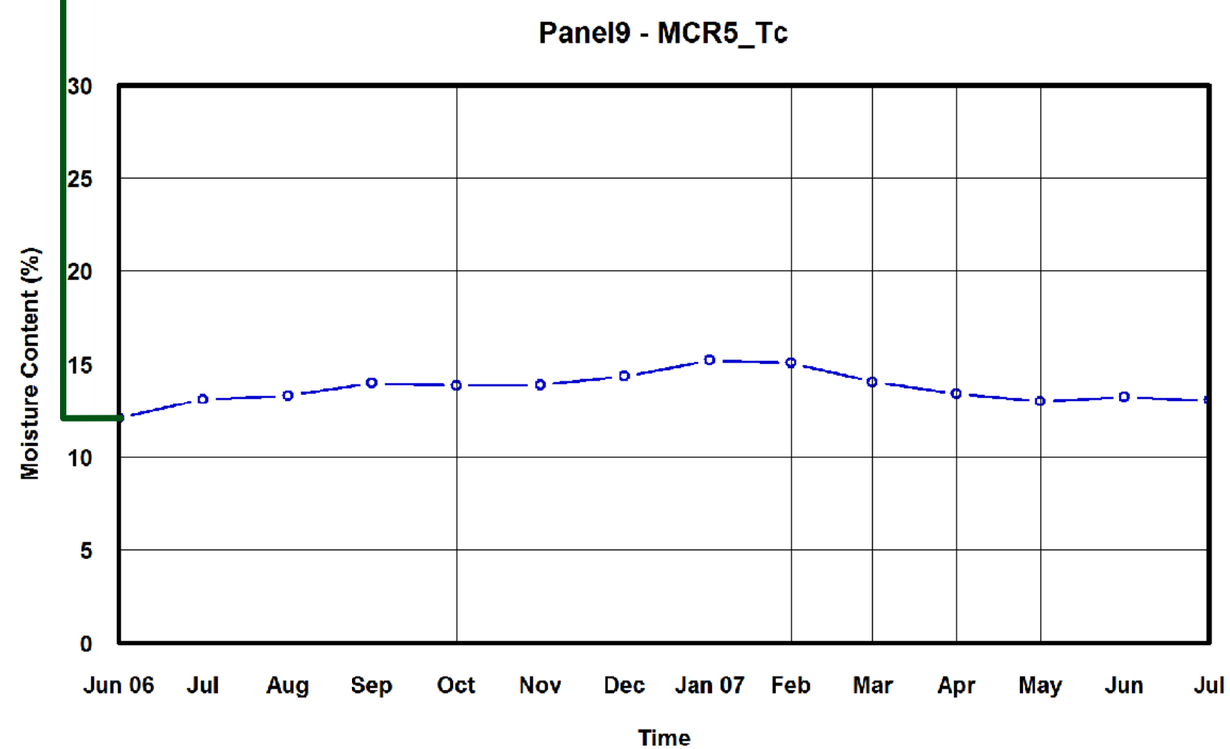
Panel9 - MCR5_Tc
Moisture Content (%)
30
25
20
15
10
5
0
Jun 06
Jul
Aug
Sep
Oct
Nov
Dec
Jan 07
Feb
Mar
Apr
May
Jun
Jul
Time

Panel 9

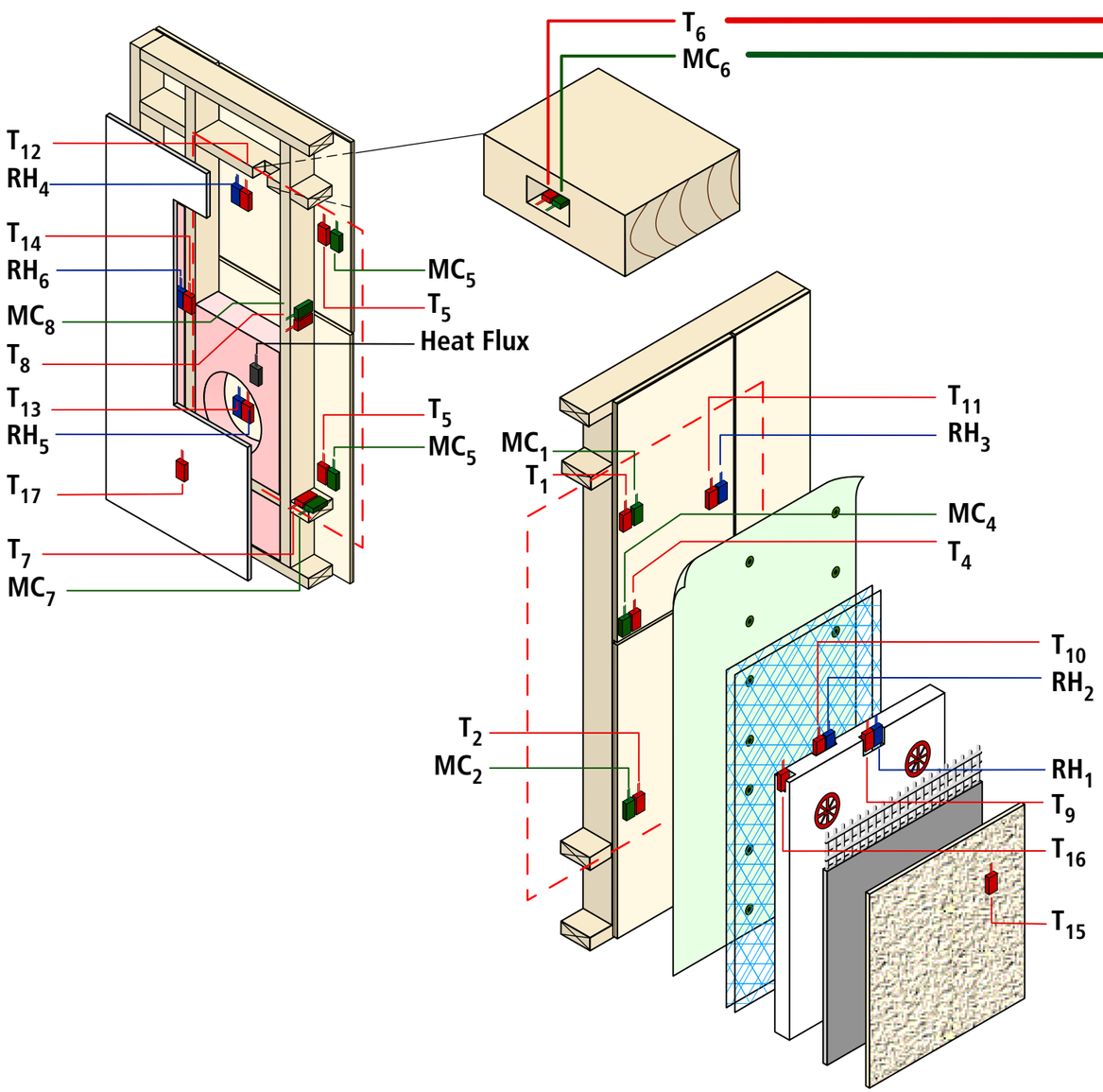
T_6
MC_6
T_{12}
RH_4
T_{14}
RH_6
MC_8
T_8
T_{13}
RH_5
T_{17}
T_7
MC_7
MC_5
T_5
Heat Flux
T_5
MC_5
MC_1
T_1
T_{11}
RH_3
MC_4
T_4
T_{10}
RH_2
T_2
MC_2
RH_1
T_9
T_{16}
T_{15}

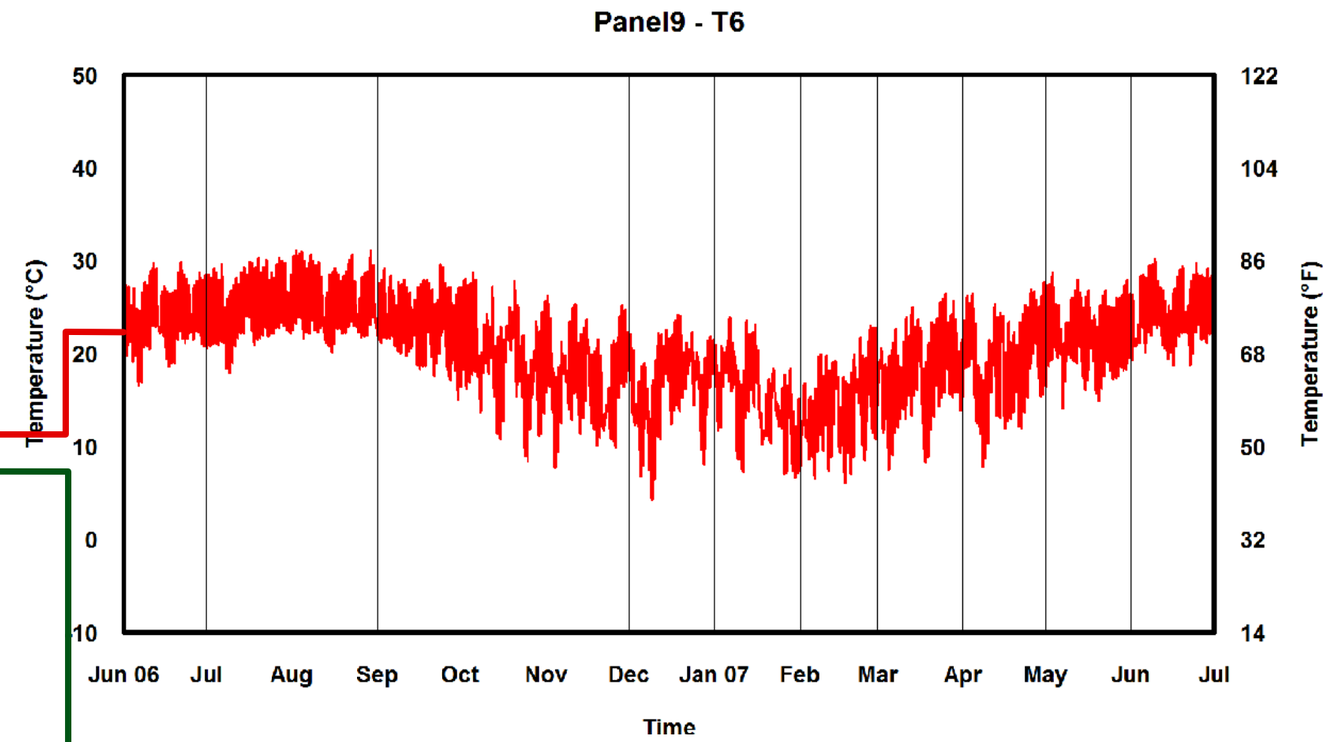
Panel9 - T6
Temperature (°C)
Temperature (°F)
50
40
30
20
10
0
-10
122
104
86
68
50
32
14
Jun 06
Jul
Aug
Sep
Oct
Nov
Dec
Jan 07
Feb
Mar
Apr
May
Jun
Jul
Time

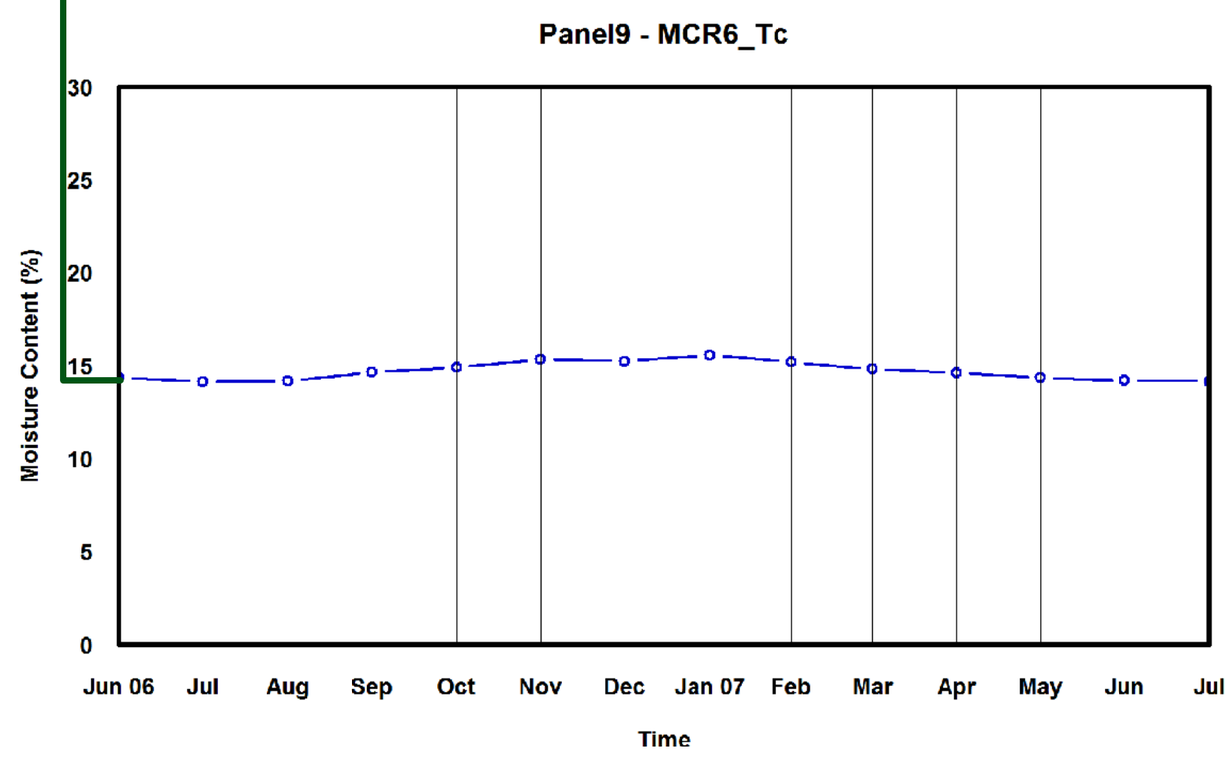
Panel9 - MCR6_Tc
Moisture Content (%)
30
25
20
15
10
5
0
Jun 06
Jul
Aug
Sep
Oct
Nov
Dec
Jan 07
Feb
Mar
Apr
May
Jun
Jul
Time

Panel 9

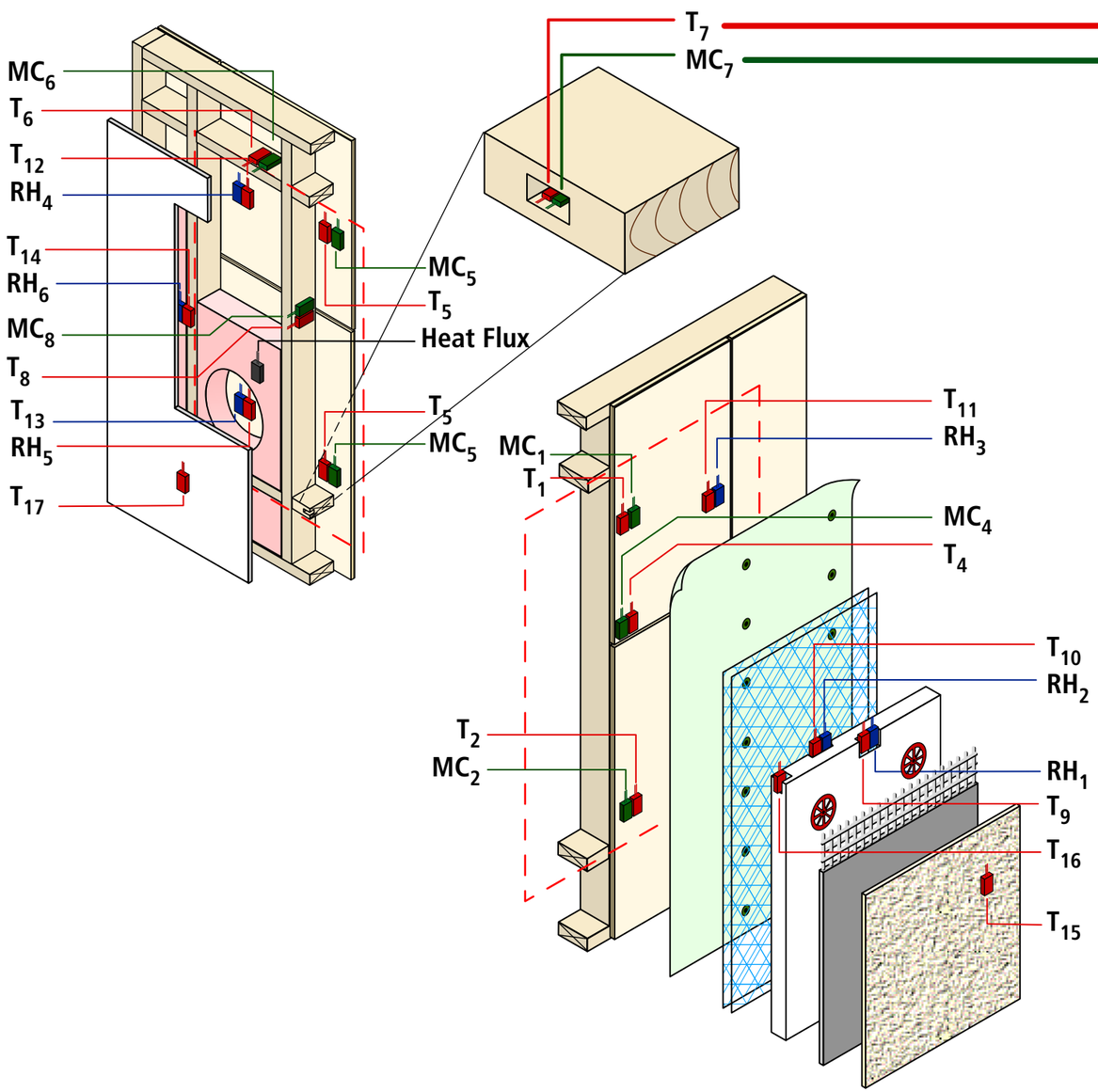
MC_6
T_6
T_{12}
RH_4
T_{14}
RH_6
MC_8
T_8
T_{13}
RH_5
T_{17}
T_7
MC_7
MC_5
T_5
Heat Flux
T_5
MC_5
MC_1
T_1
T_{11}
RH_3
MC_4
T_4
T_{10}
RH_2
T_2
MC_2
RH_1
T_9
T_{16}
T_{15}

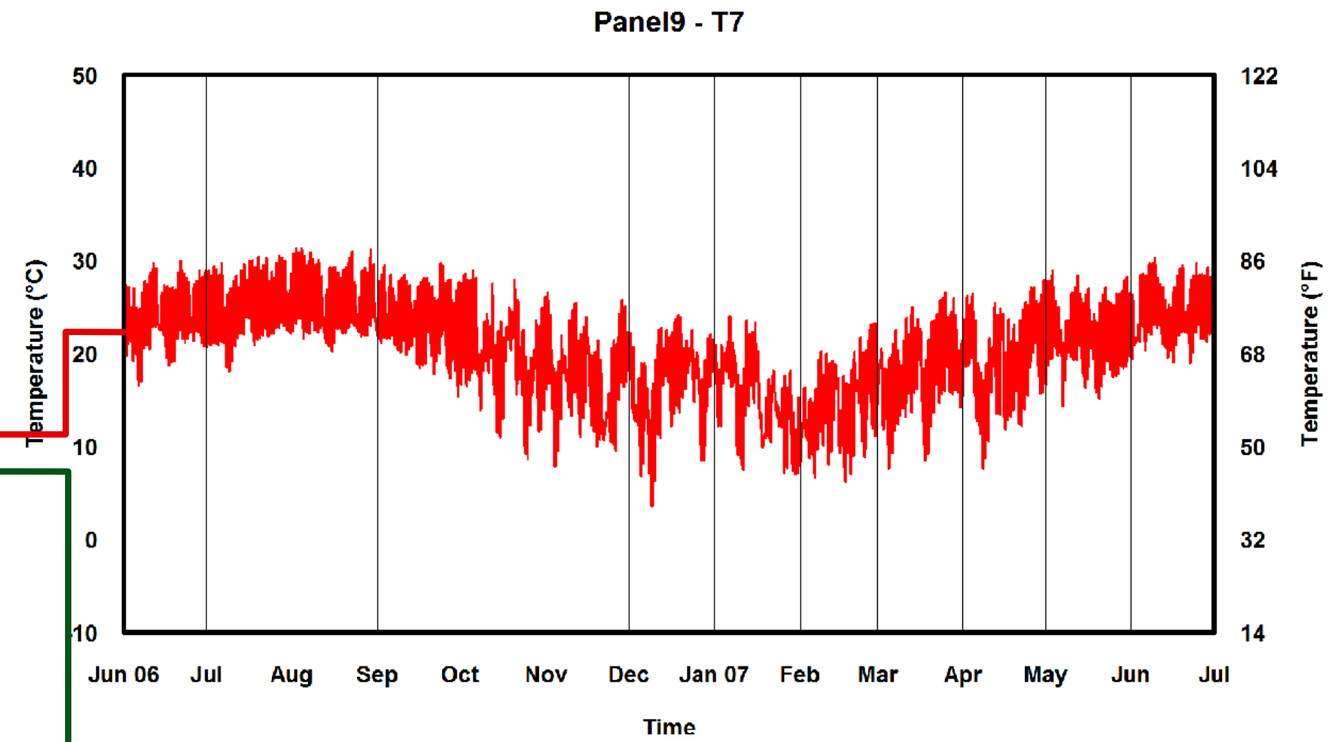
Panel9 - T7
Temperature (°C)
Temperature (°F)
50
40
30
20
10
0
-10
122
104
86
68
50
32
14
Jun 06
Jul
Aug
Sep
Oct
Nov
Dec
Jan 07
Feb
Mar
Apr
May
Jun
Jul
Time

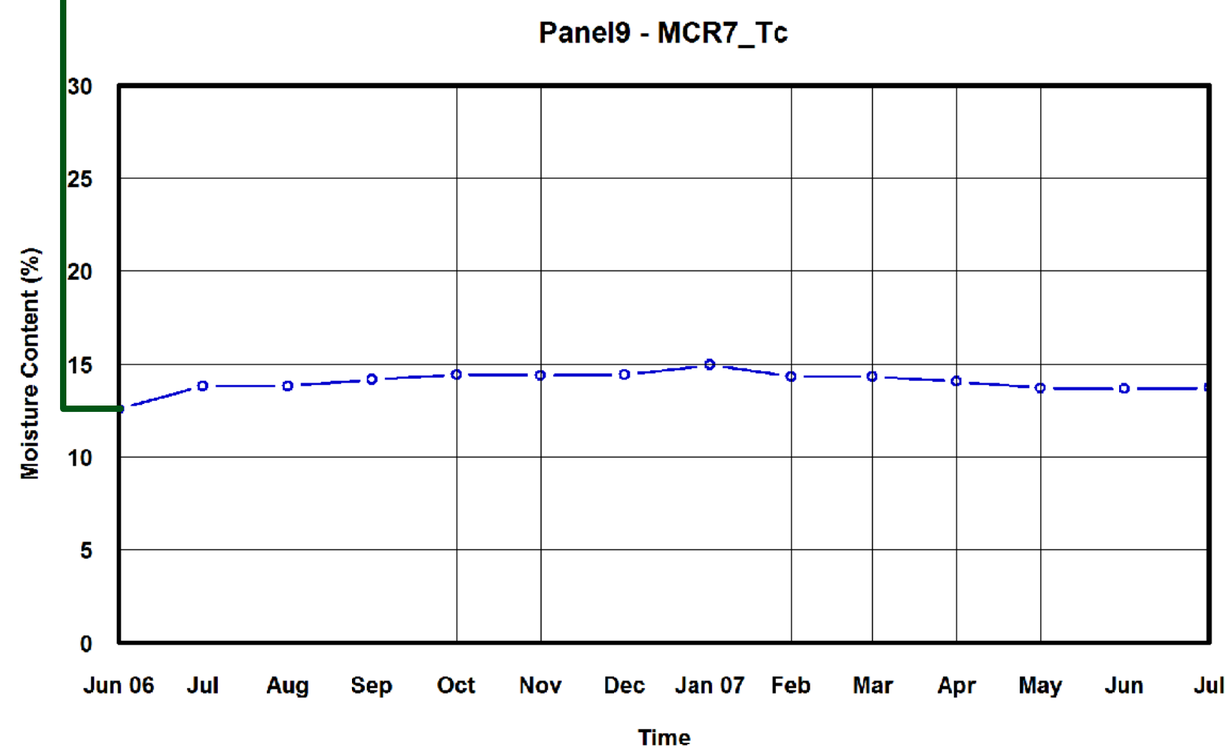
Panel9 - MCR7_Tc
Moisture Content (%)
30
25
20
15
10
5
0
Jun 06
Jul
Aug
Sep
Oct
Nov
Dec
Jan 07
Feb
Mar
Apr
May
Jun
Jul
Time

Panel 9

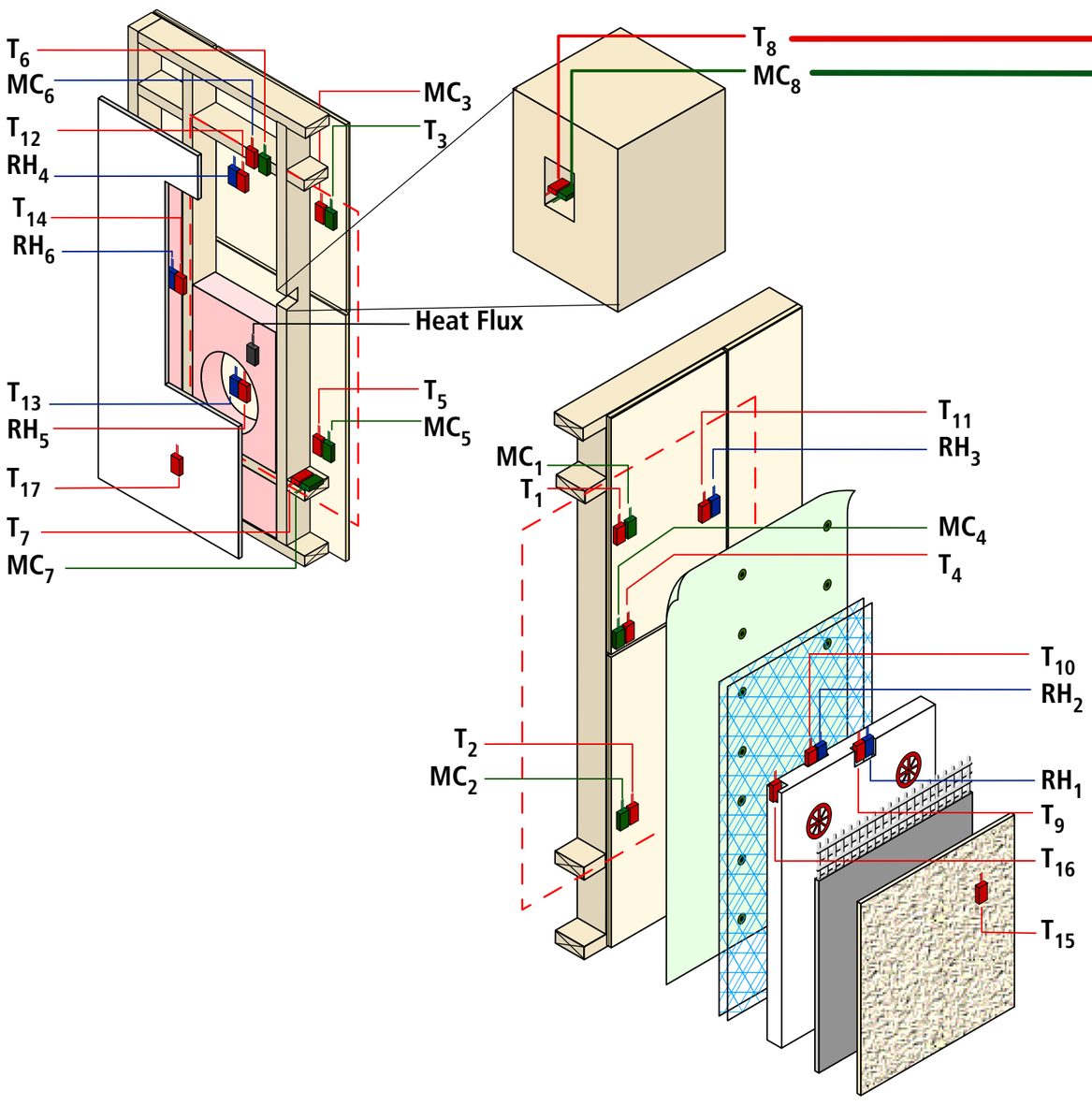
T_6
MC_6
T_{12}
RH_4
T_{14}
RH_6
T_{13}
RH_5
T_{17}
T_7
MC_7
MC_3
T_3
Heat Flux
T_5
MC_5
T_8
MC_8
MC_1
T_1
T_2
MC_2
T_{11}
RH_3
MC_4
T_4
T_{10}
RH_2
RH_1
T_9
T_{16}
T_{15}

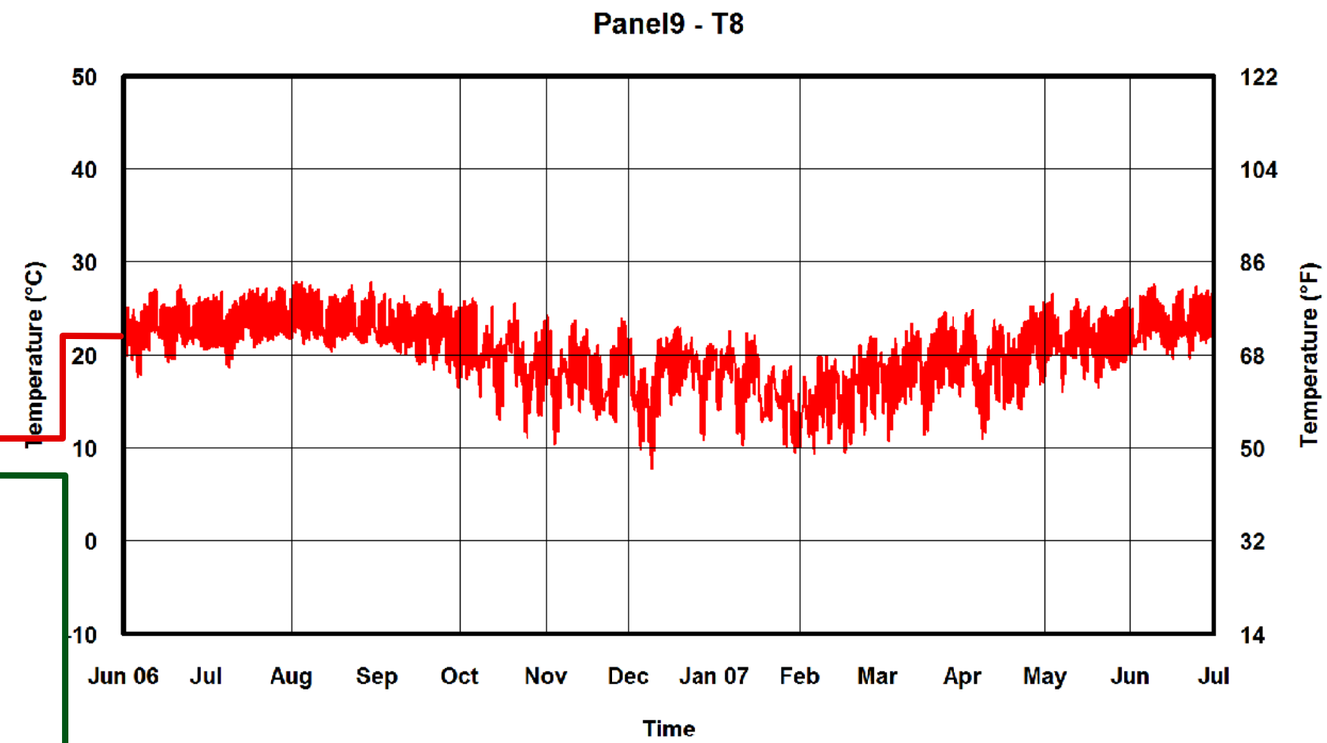
Panel9 - T8
Temperature (°C)
Temperature (°F)
50
40
30
20
10
0
-10
122
104
86
68
50
32
14
Jun 06
Jul
Aug
Sep
Oct
Nov
Dec
Jan 07
Feb
Mar
Apr
May
Jun
Jul
Time

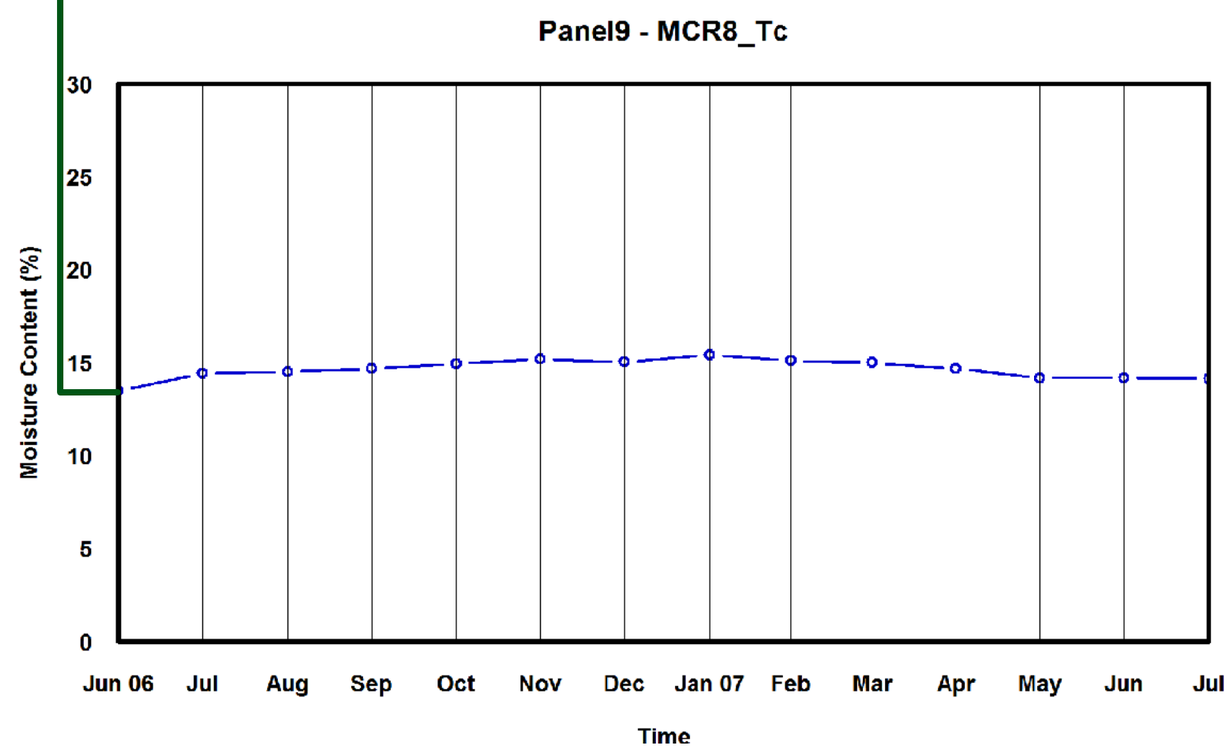
Panel9 - MCR8_Tc
Moisture Content (%)
30
25
20
15
10
5
0
Jun 06
Jul
Aug
Sep
Oct
Nov
Dec
Jan 07
Feb
Mar
Apr
May
Jun
Jul
Time

Panel 9

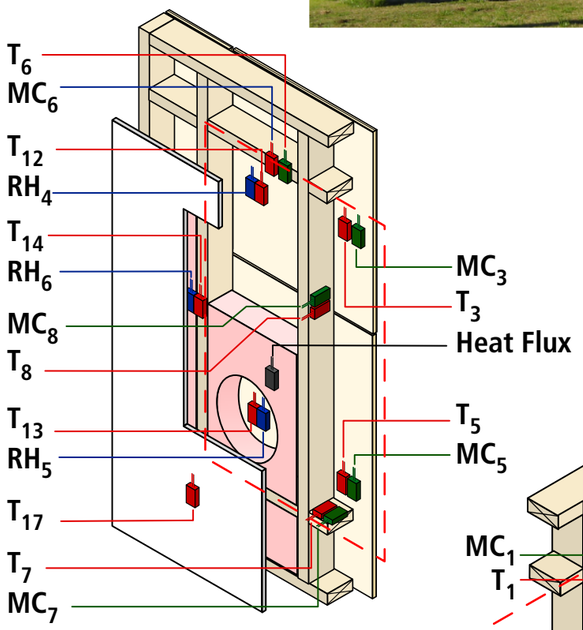
T_6
MC_6
T_{12}
RH_4
T_{14}
RH_6
MC_8
T_8
T_{13}
RH_5
T_{17}
T_7
MC_7
MC_3
T_3
Heat Flux
T_5
MC_5

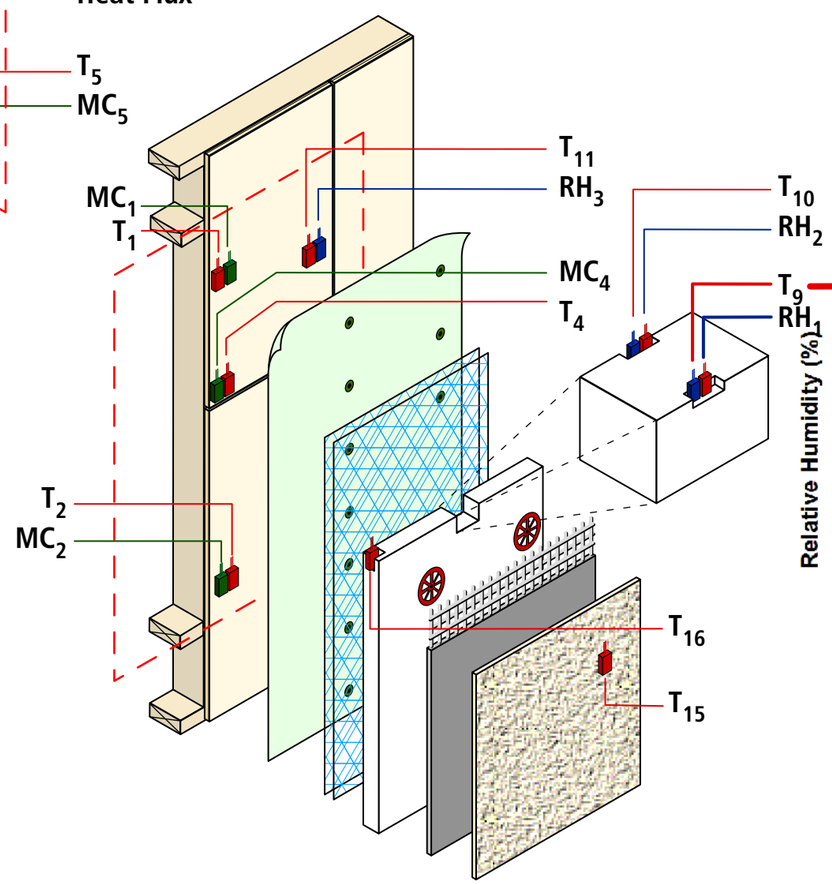
MC_1
T_1
T_2
MC_2
T_{11}
RH_3
MC_4
T_4
T_{10}
RH_2
T_9
RH_1
T_{16}
T_{15}

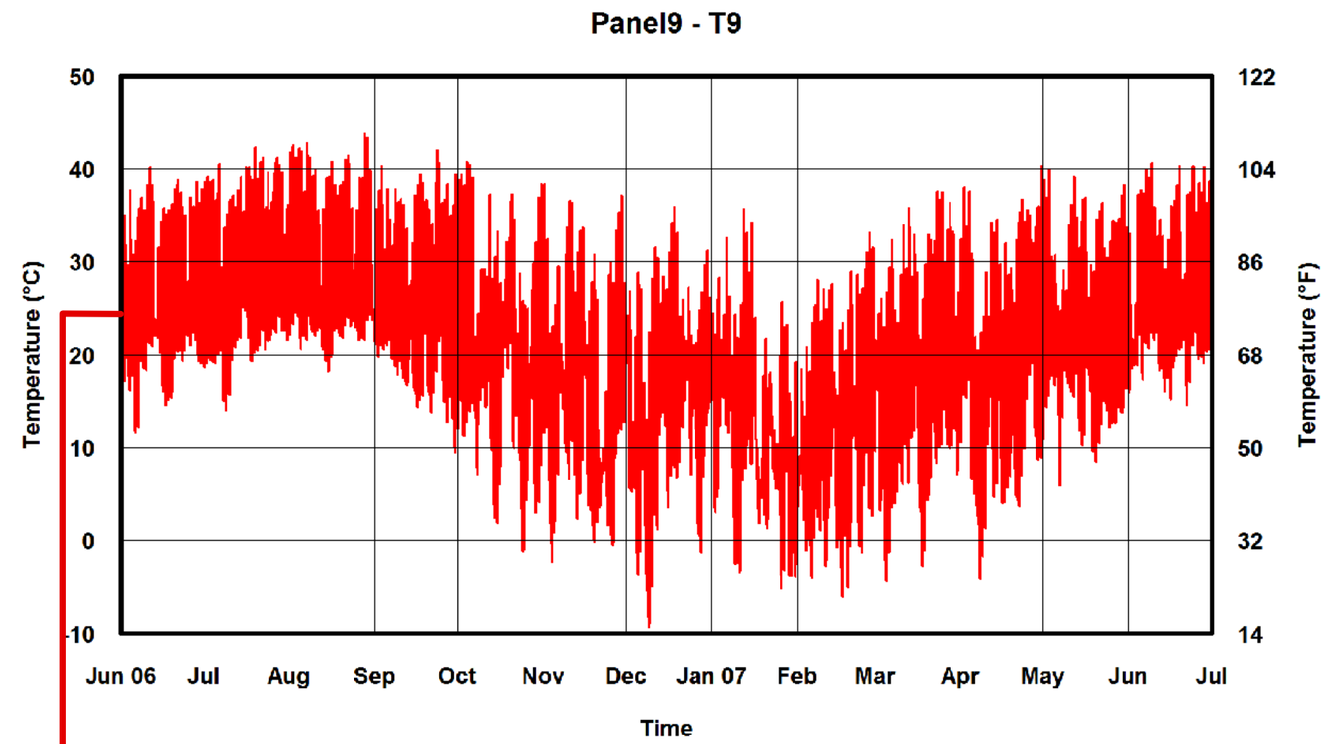
Panel9 - T9
Temperature (°C)
Temperature (°F)
50
40
30
20
10
0
-10
122
104
86
68
50
32
14
Jun 06
Jul
Aug
Sep
Oct
Nov
Dec
Jan 07
Feb
Mar
Apr
May
Jun
Jul
Time

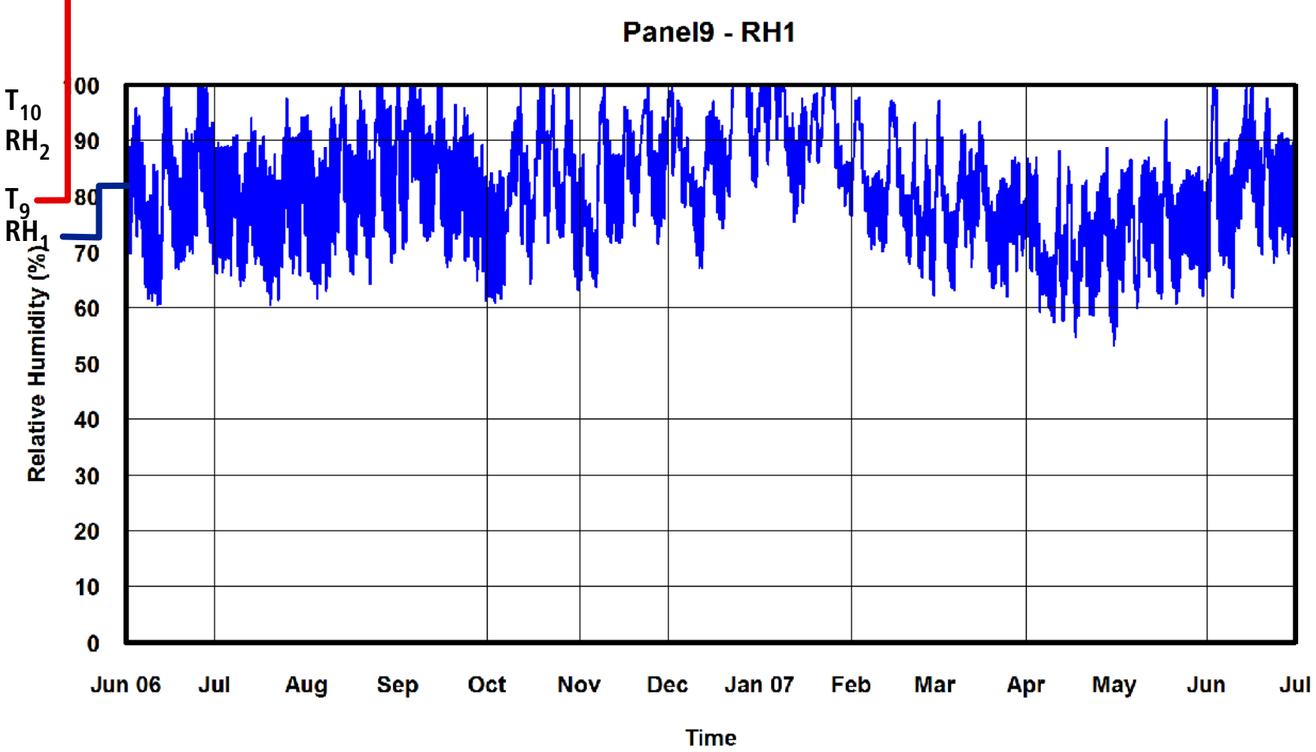
Panel9 - RH1
Relative Humidity (%)
100
90
80
70
60
50
40
30
20
10
0
Jun 06
Jul
Aug
Sep
Oct
Nov
Dec
Jan 07
Feb
Mar
Apr
May
Jun
Jul
Time

Panel 9

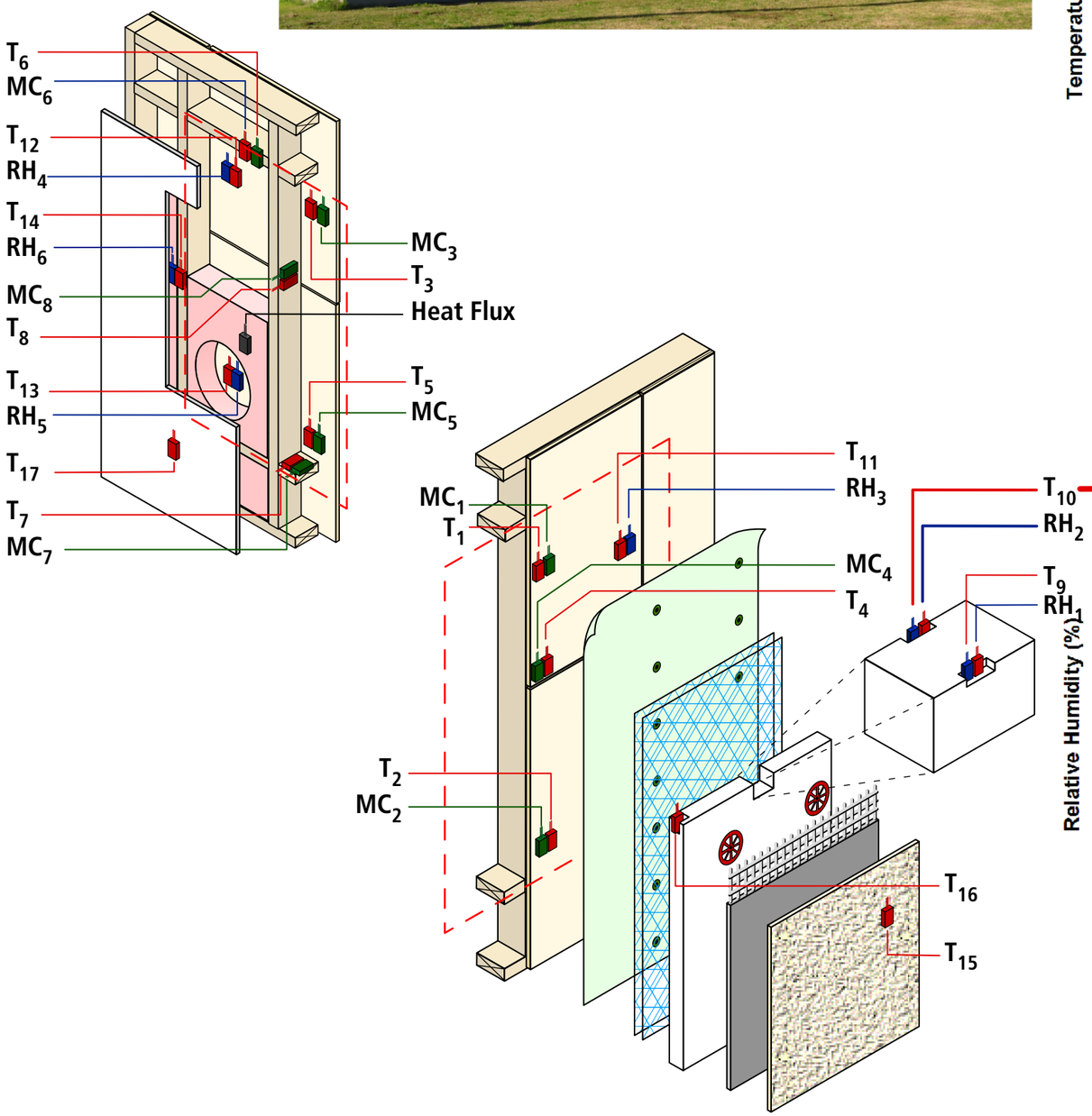
T_6
MC_6
T_{12}
RH_4
T_{14}
RH_6
MC_8
T_8
T_{13}
RH_5
T_{17}
T_7
MC_7
MC_3
T_3
Heat Flux
T_5
MC_5
MC_1
T_1
T_{11}
RH_3
MC_4
T_4
T_{10}
RH_2
T_9
RH_1
T_2
MC_2
T_{16}
T_{15}

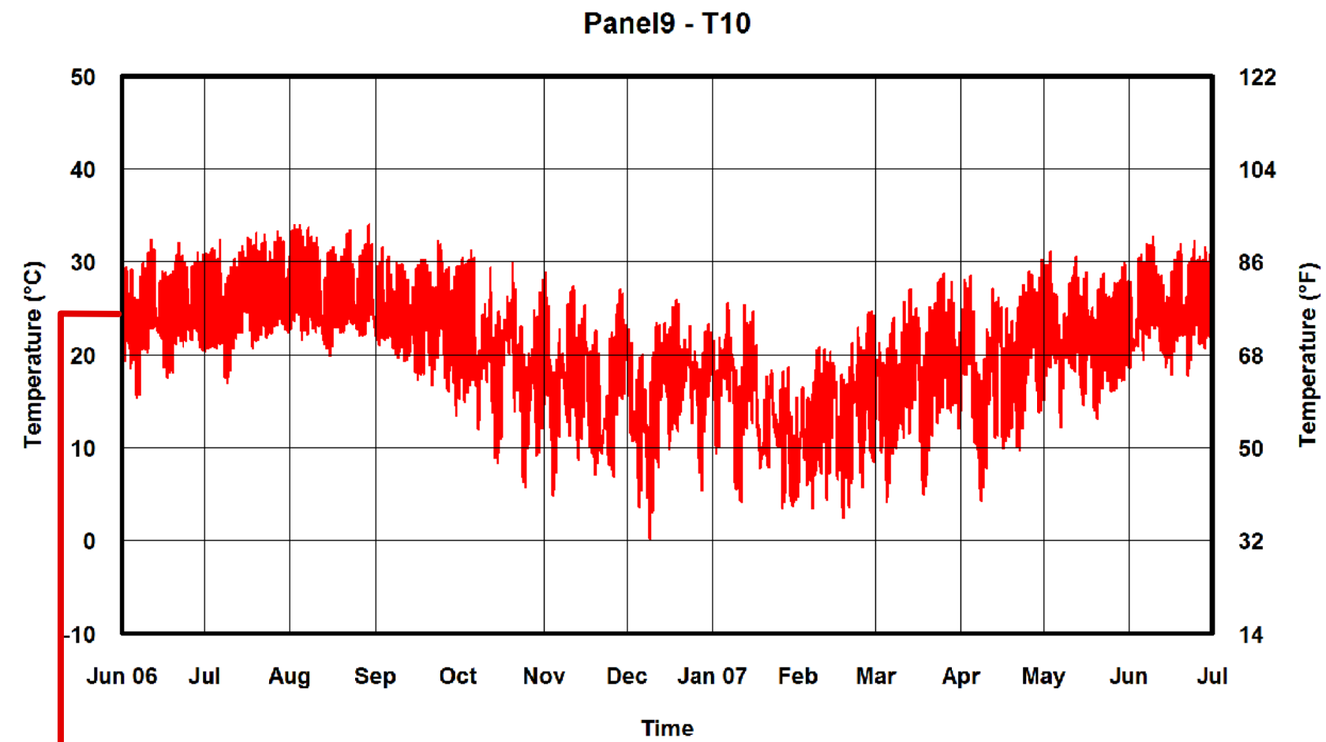
Panel9 - T10
Temperature (°C)
Temperature (°F)
50
40
30
20
10
0
-10
122
104
86
68
50
32
14
Jun 06
Jul
Aug
Sep
Oct
Nov
Dec
Jan 07
Feb
Mar
Apr
May
Jun
Jul
Time

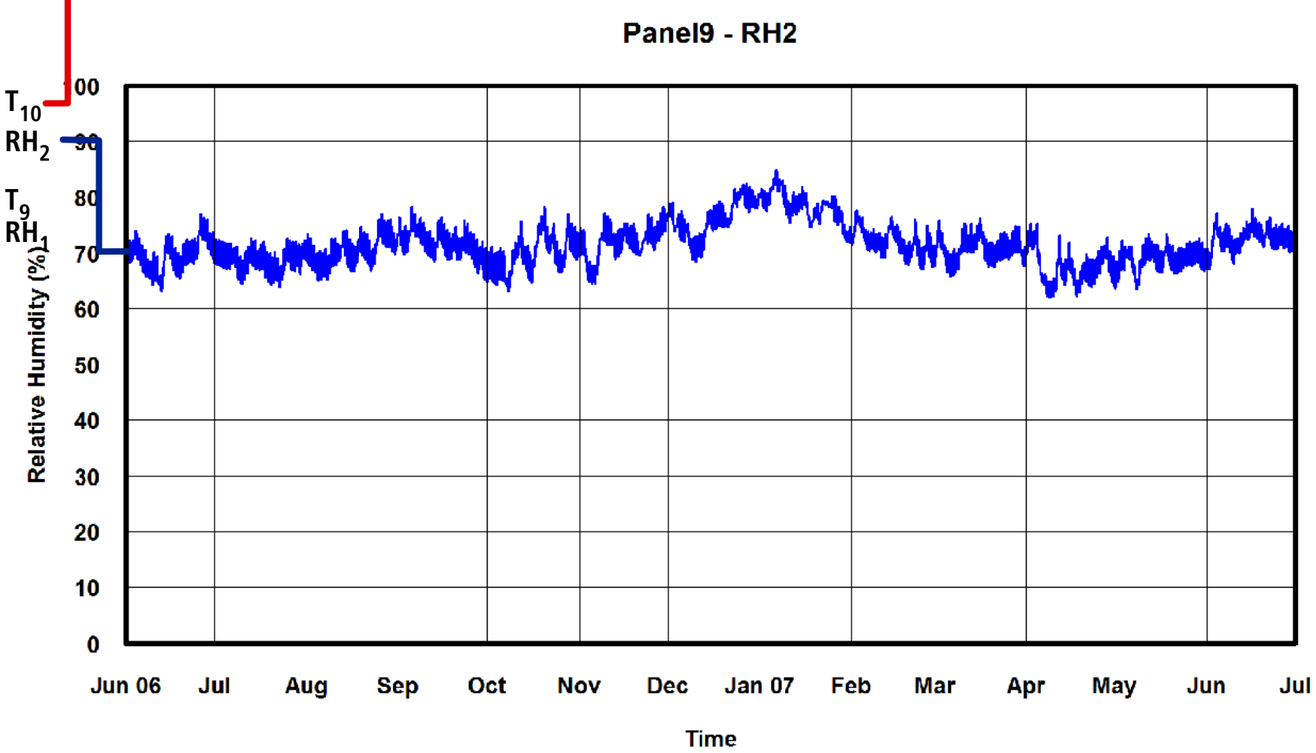
Panel9 - RH2
Relative Humidity (%)
100
90
80
70
60
50
40
30
20
10
0
Jun 06
Jul
Aug
Sep
Oct
Nov
Dec
Jan 07
Feb
Mar
Apr
May
Jun
Jul
Time

Panel 9

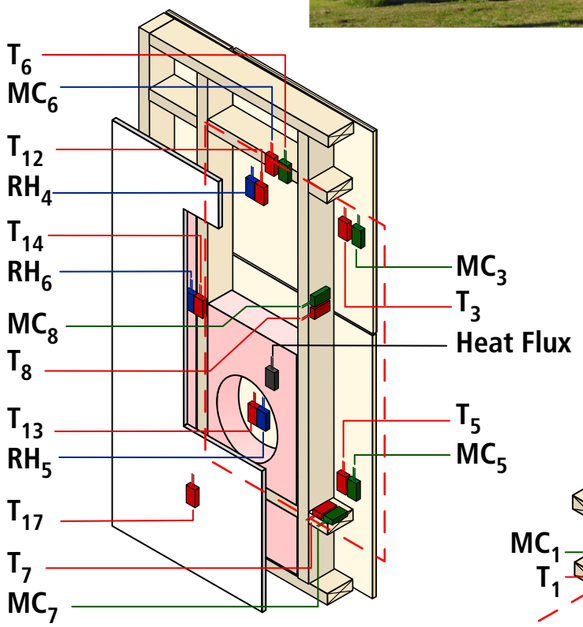
T_6
MC_6
T_{12}
RH_4
T_{14}
RH_6
MC_8
T_8
T_{13}
RH_5
T_{17}
T_7
MC_7
MC_3
T_3
Heat Flux
T_5
MC_5

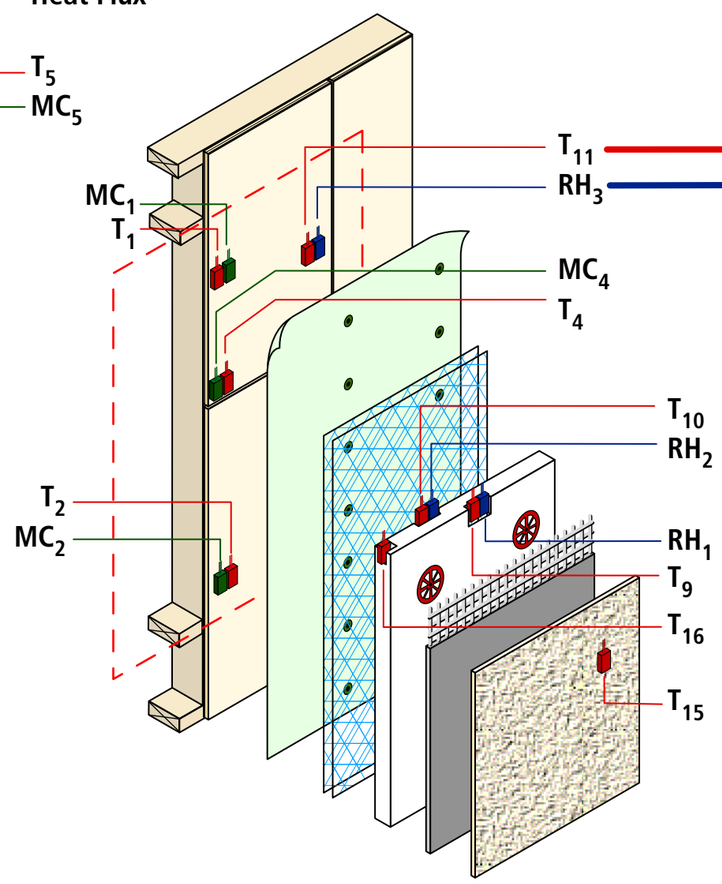
T_{11}
RH_3
MC_1
T_1
MC_4
T_4
T_{10}
RH_2
T_2
MC_2
RH_1
T_9
T_{16}
T_{15}

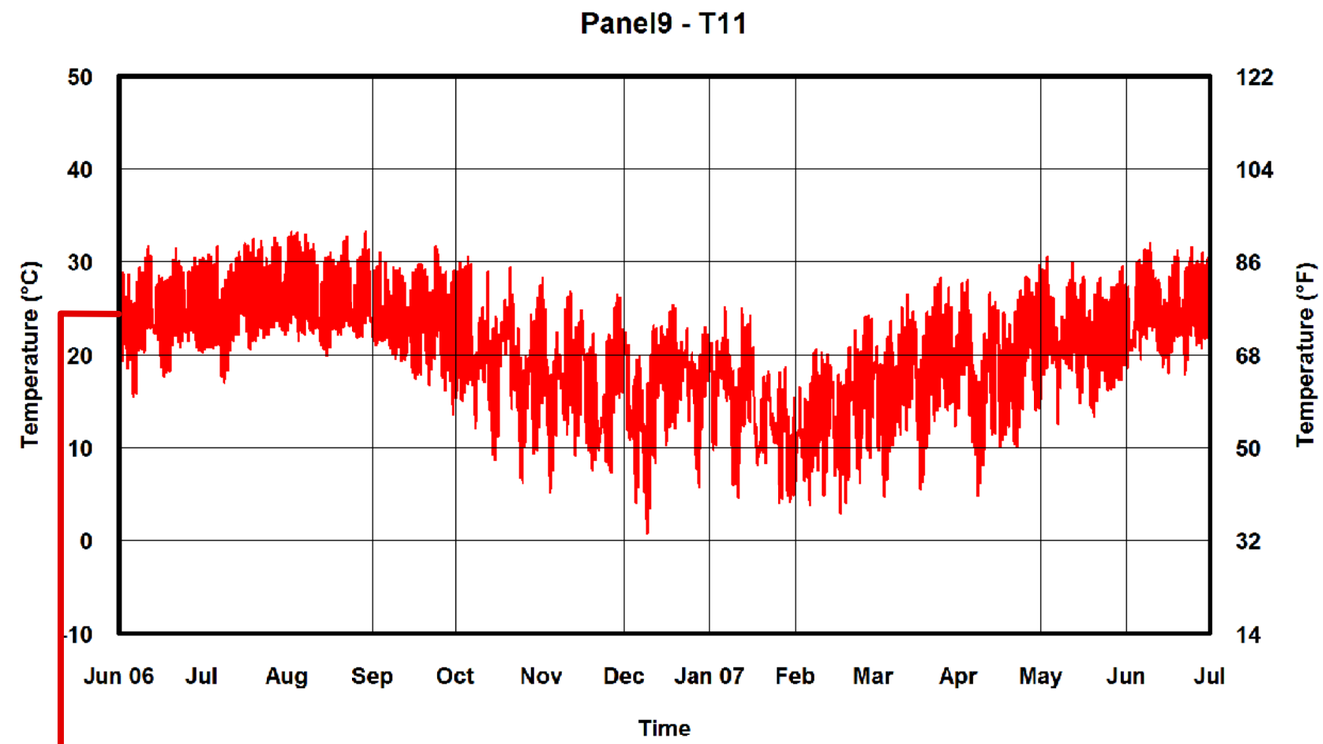
Panel9 - T11
Temperature (°C)
Temperature (°F)
50
40
30
20
10
0
-10
122
104
86
68
50
32
14
Jun 06
Jul
Aug
Sep
Oct
Nov
Dec
Jan 07
Feb
Mar
Apr
May
Jun
Jul
Time

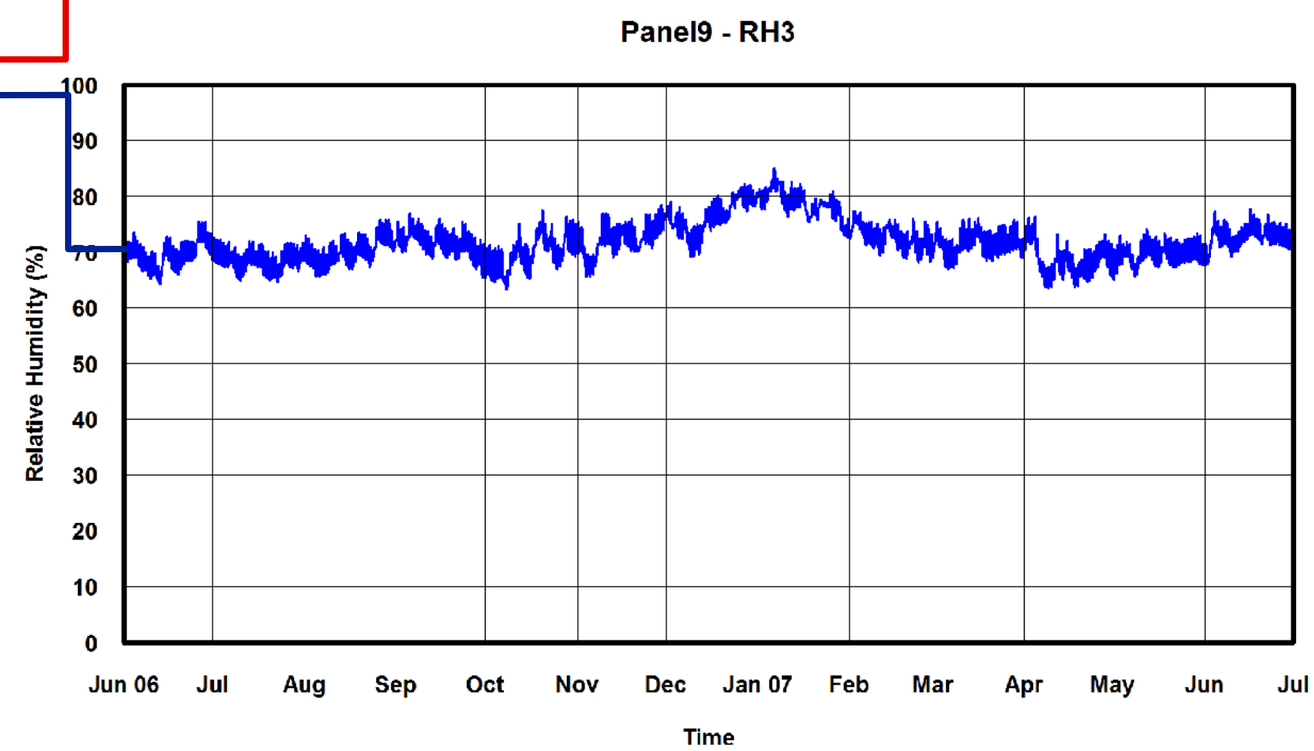
Panel9 - RH3
Relative Humidity (%)
100
90
80
70
60
50
40
30
20
10
0
Jun 06
Jul
Aug
Sep
Oct
Nov
Dec
Jan 07
Feb
Mar
Apr
May
Jun
Jul
Time

Panel 9

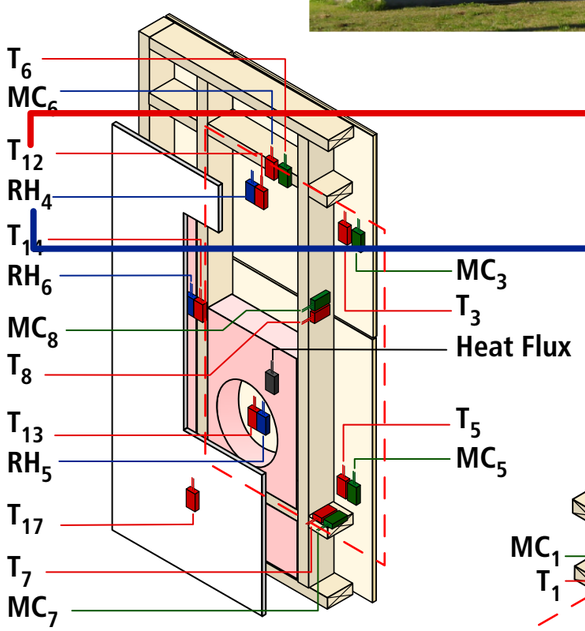
T_6
MC_6
T_{12}
RH_4
T_{14}
RH_6
MC_8
T_8
T_{13}
RH_5
T_{17}
T_7
MC_7
MC_3
T_3
Heat Flux
T_5
MC_5

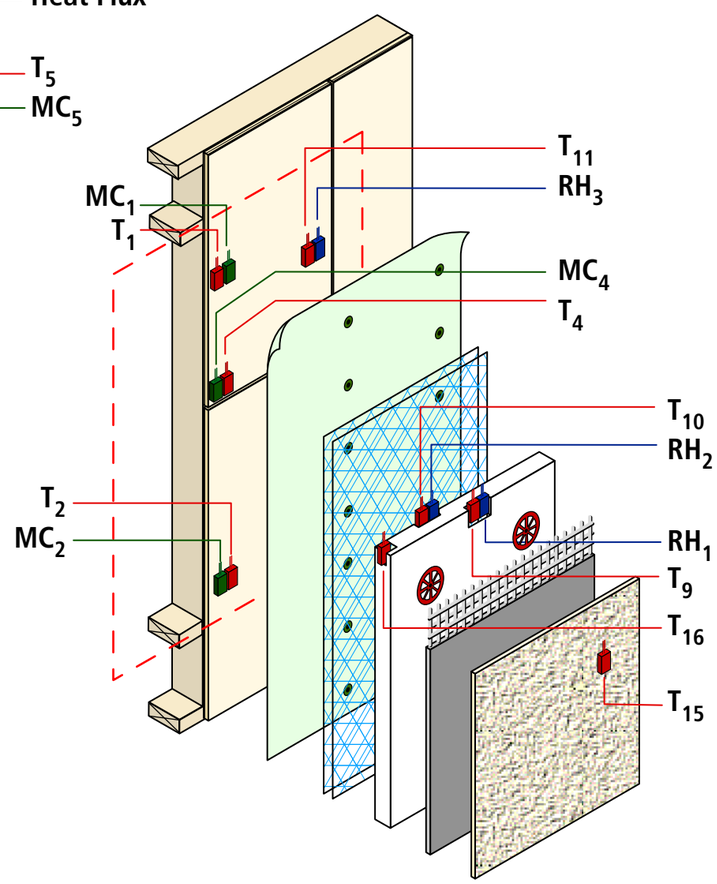
MC_1
T_1
T_2
MC_2
T_{11}
RH_3
MC_4
T_4
T_{10}
RH_2
RH_1
T_9
T_{16}
T_{15}

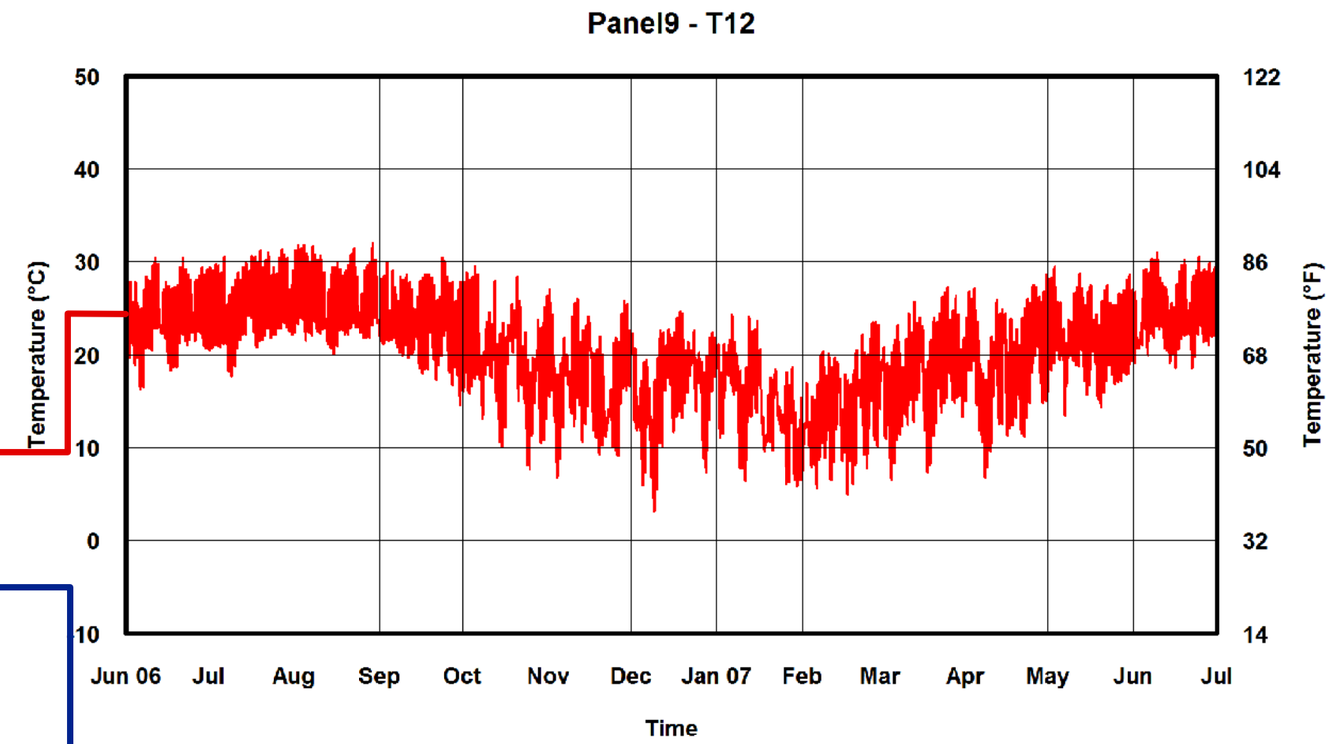
Panel9 - T12
Temperature (°C)
Temperature (°F)
50
40
30
20
10
0
-10
122
104
86
68
50
32
14
Jun 06
Jul
Aug
Sep
Oct
Nov
Dec
Jan 07
Feb
Mar
Apr
May
Jun
Jul
Time

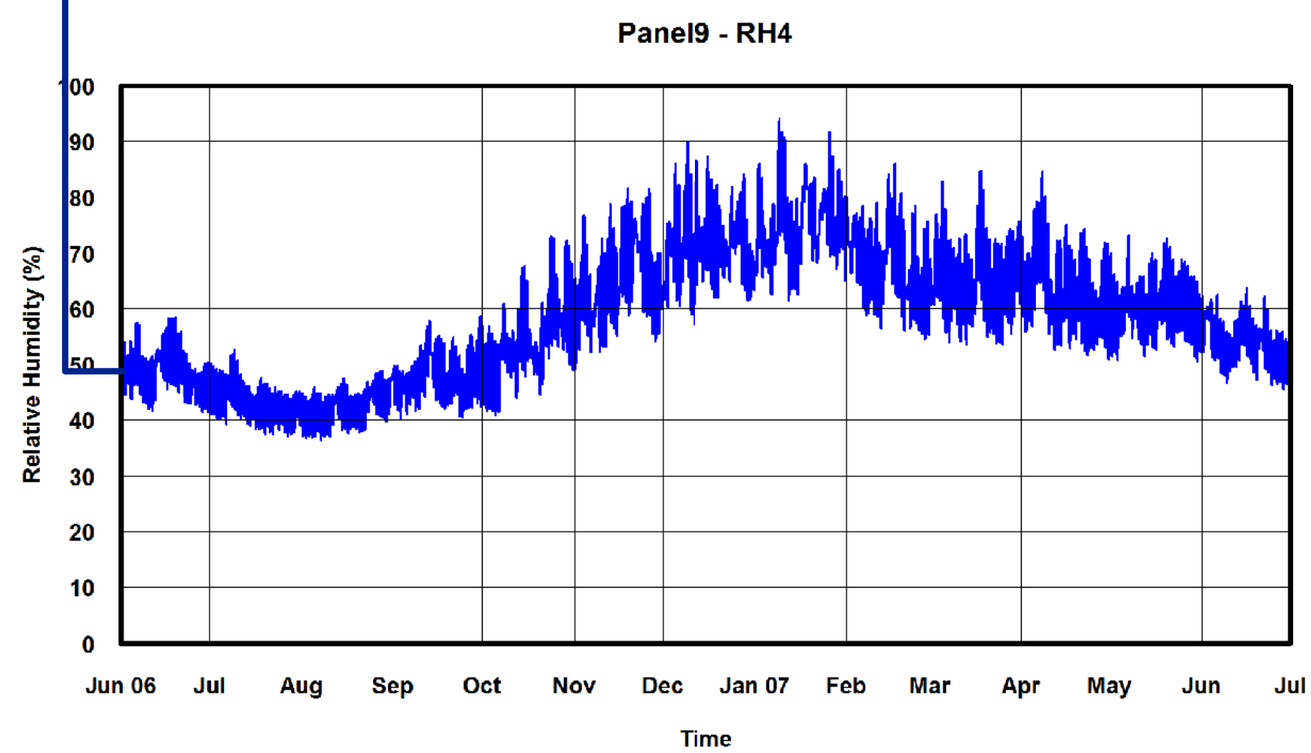
Panel9 - RH4
Relative Humidity (%)
100
90
80
70
60
50
40
30
20
10
0
Jun 06
Jul
Aug
Sep
Oct
Nov
Dec
Jan 07
Feb
Mar
Apr
May
Jun
Jul
Time

Panel 9

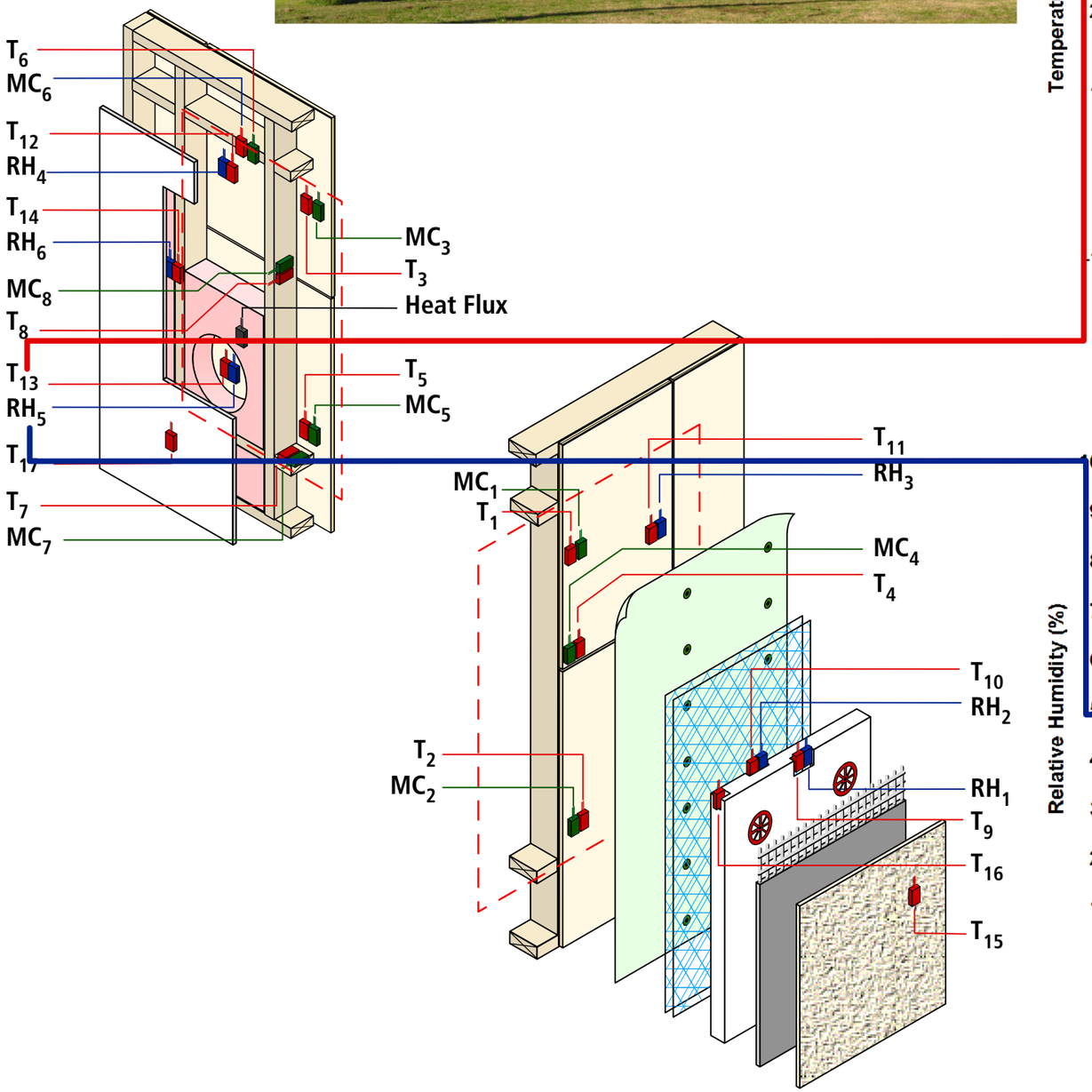
T_6
MC_6
T_{12}
RH_4
T_{14}
RH_6
MC_8
T_8
T_{13}
RH_5
T_{17}
T_7
MC_7
MC_3
T_3
Heat Flux
T_5
MC_5
T_{11}
RH_3
MC_1
T_1
MC_4
T_4
T_{10}
RH_2
T_2
MC_2
RH_1
T_9
T_{16}
T_{15}

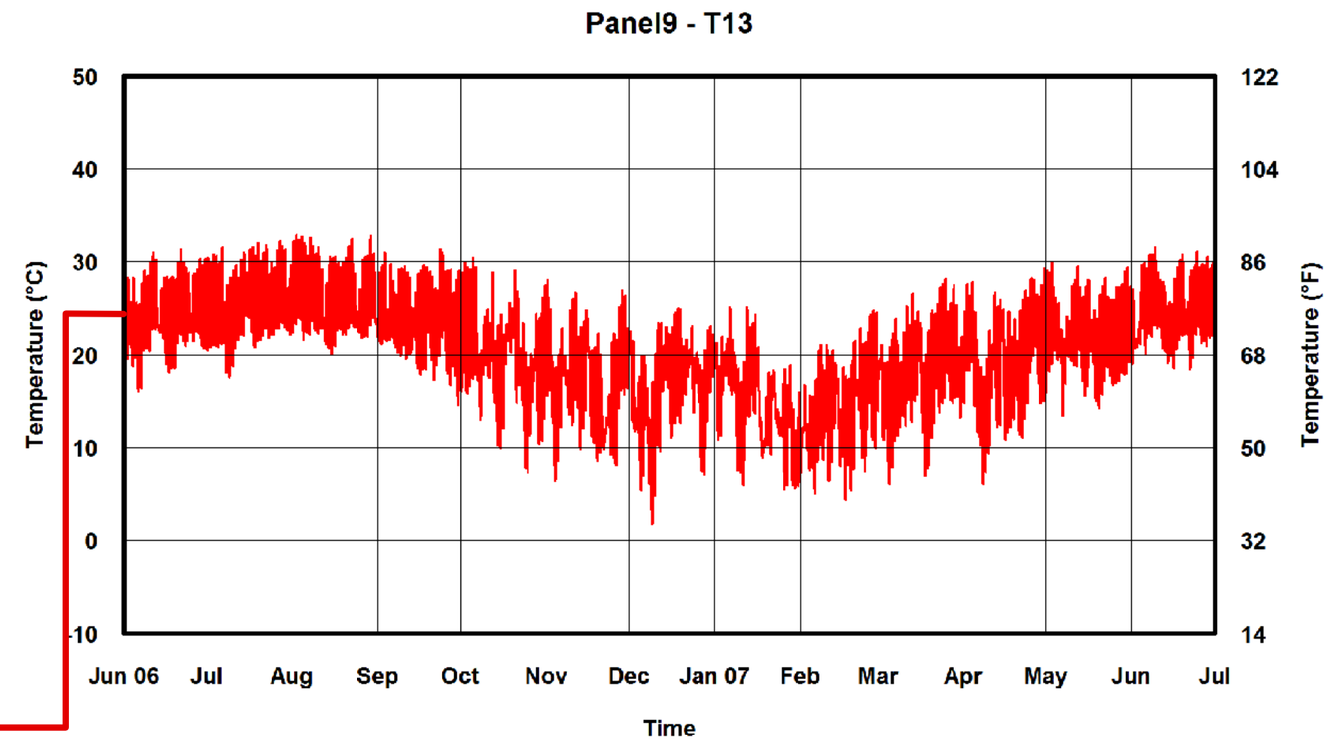
Panel9 - T13
Temperature (°C)
50
40
30
20
10
0
-10
Temperature (°F)
122
104
86
68
50
32
14
Jun 06
Jul
Aug
Sep
Oct
Nov
Dec
Jan 07
Feb
Mar
Apr
May
Jun
Jul
Time

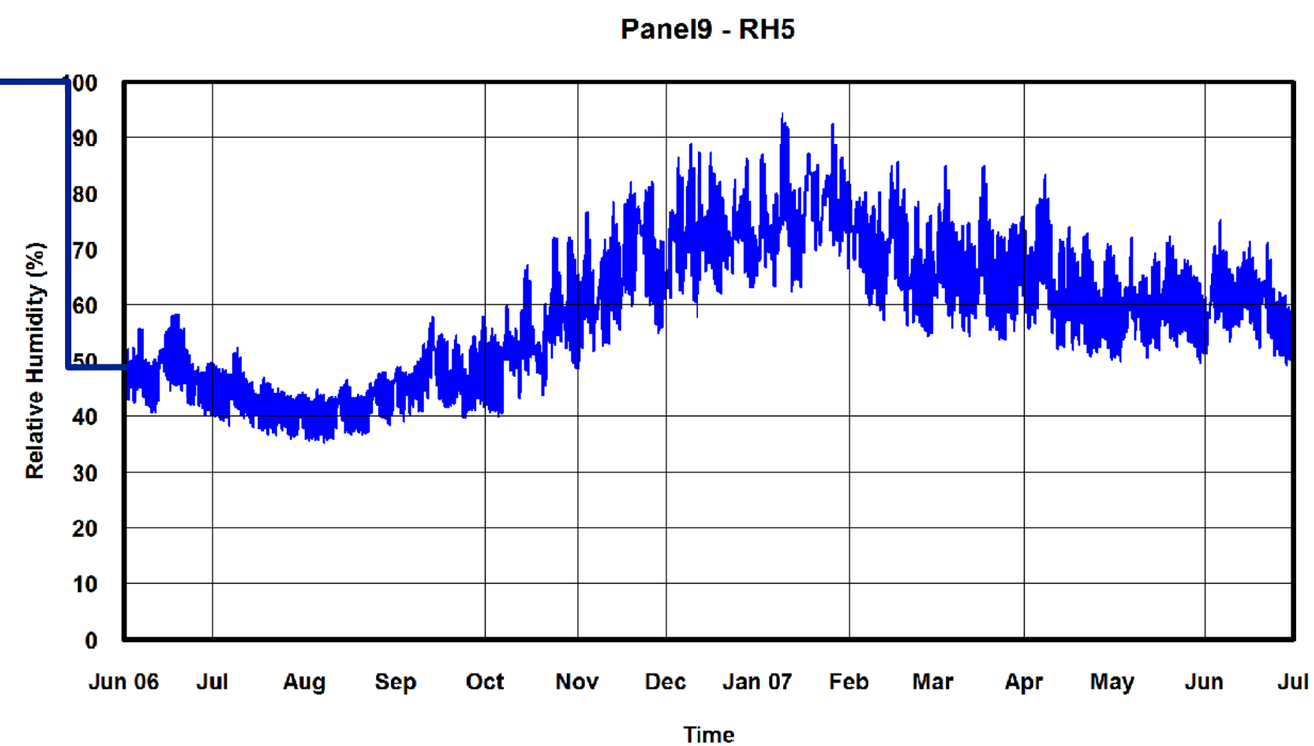
Panel9 - RH5
Relative Humidity (%)
100
90
80
70
60
50
40
30
20
10
0
Jun 06
Jul
Aug
Sep
Oct
Nov
Dec
Jan 07
Feb
Mar
Apr
May
Jun
Jul
Time

Panel 9

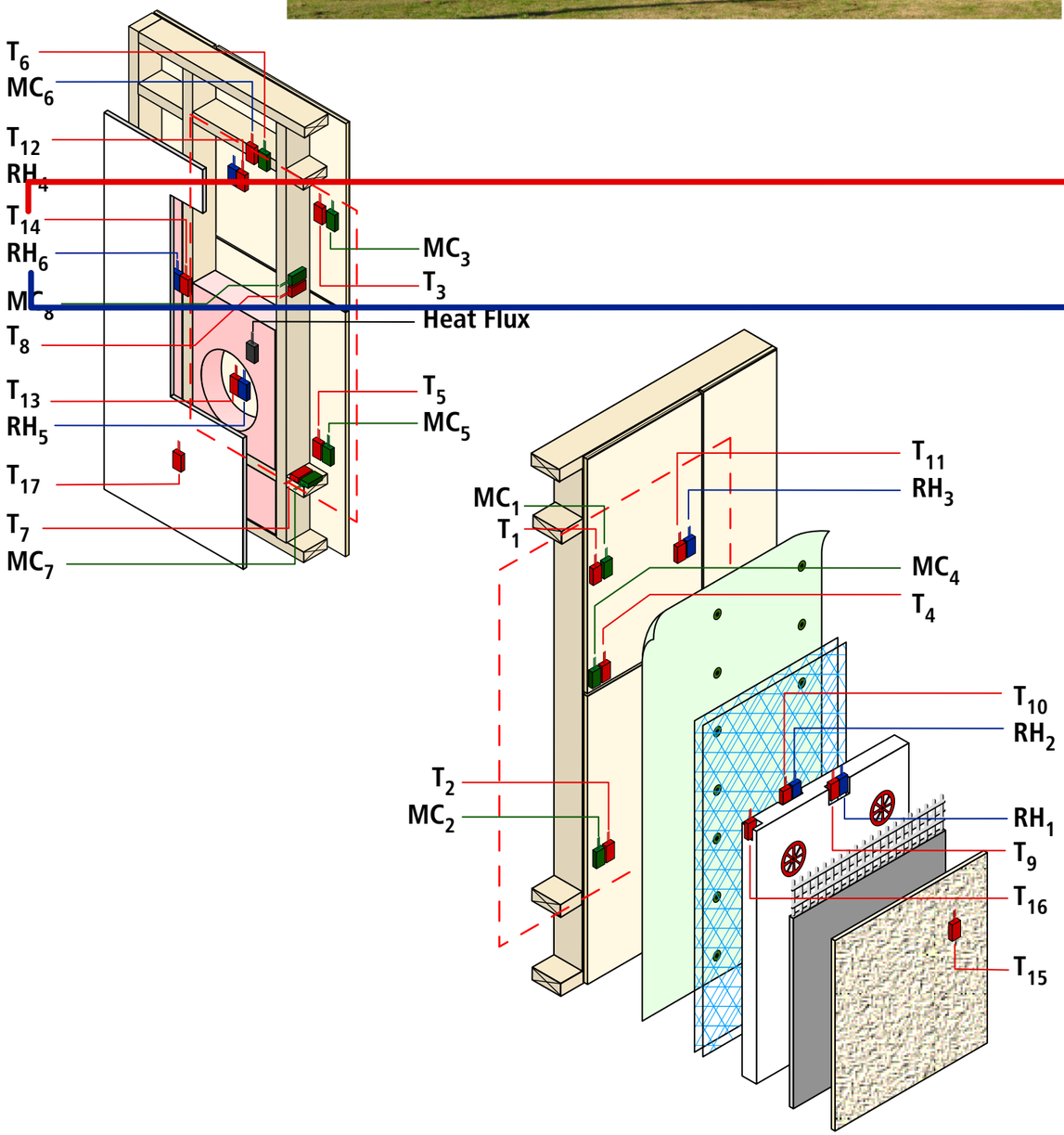
T_6
MC_6
T_{12}
RH_4
T_{14}
RH_6
MC_8
T_8
T_{13}
RH_5
T_{17}
T_7
MC_7
MC_3
T_3
Heat Flux
T_5
MC_5
MC_1
T_1
T_2
MC_2
T_{11}
RH_3
MC_4
T_4
T_{10}
RH_2
RH_1
T_9
T_{16}
T_{15}

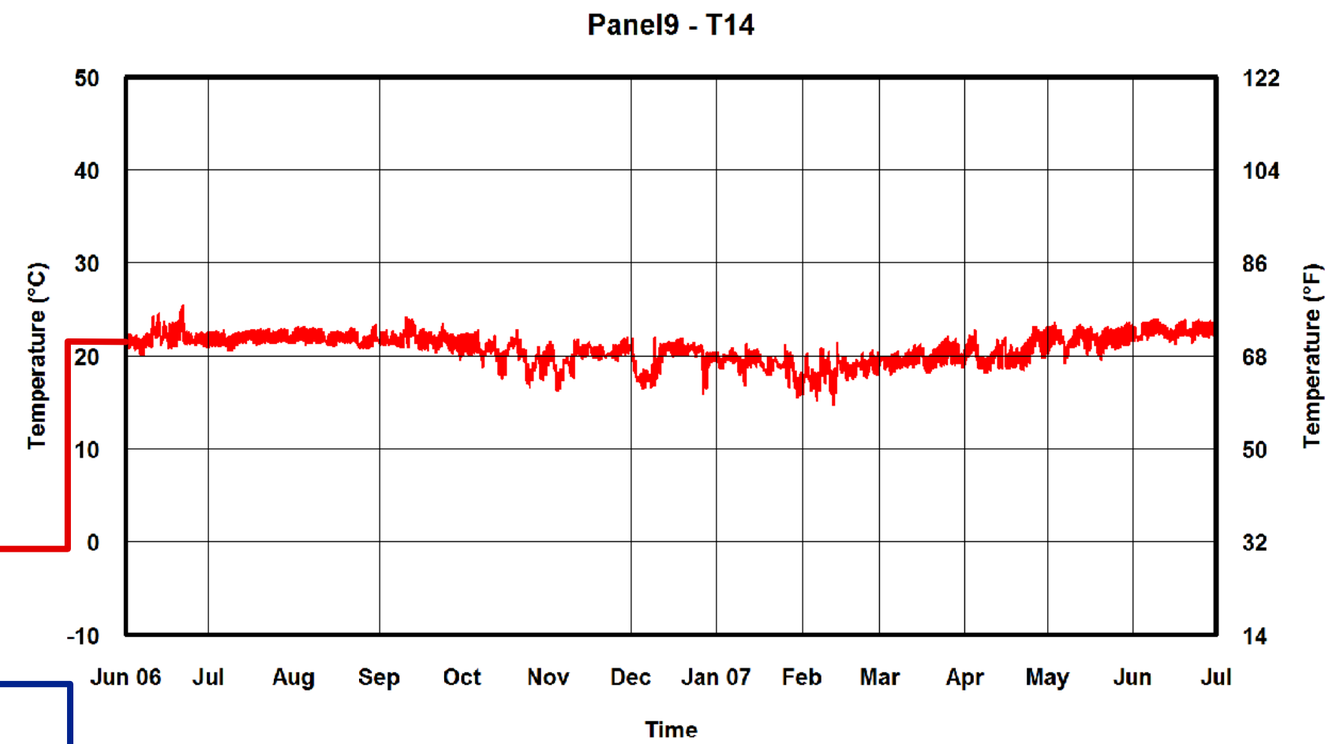
Panel9 - T14
Temperature (°C)
50
40
30
20
10
0
-10
Temperature (°F)
122
104
86
68
50
32
14
Jun 06
Jul
Aug
Sep
Oct
Nov
Dec
Jan 07
Feb
Mar
Apr
May
Jun
Jul
Time

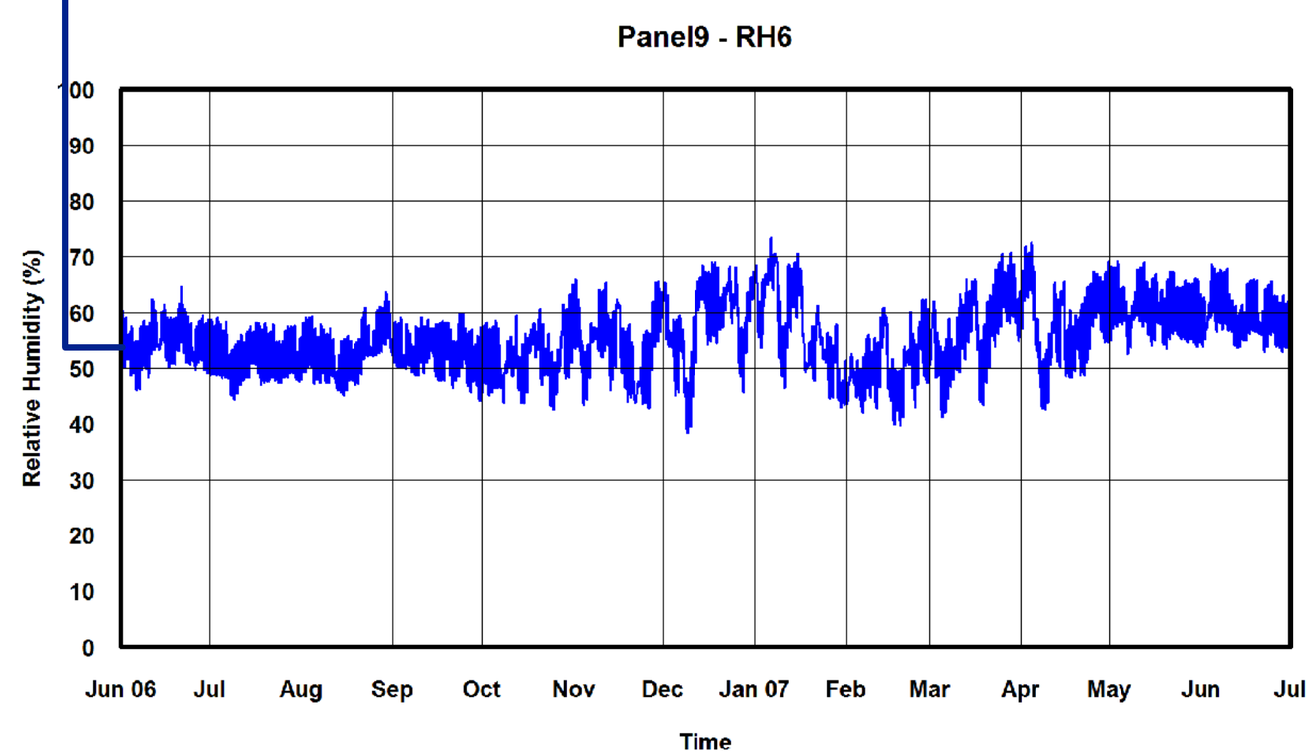
Panel9 - RH6
Relative Humidity (%)
100
90
80
70
60
50
40
30
20
10
0
Jun 06
Jul
Aug
Sep
Oct
Nov
Dec
Jan 07
Feb
Mar
Apr
May
Jun
Jul
Time

Panel 9

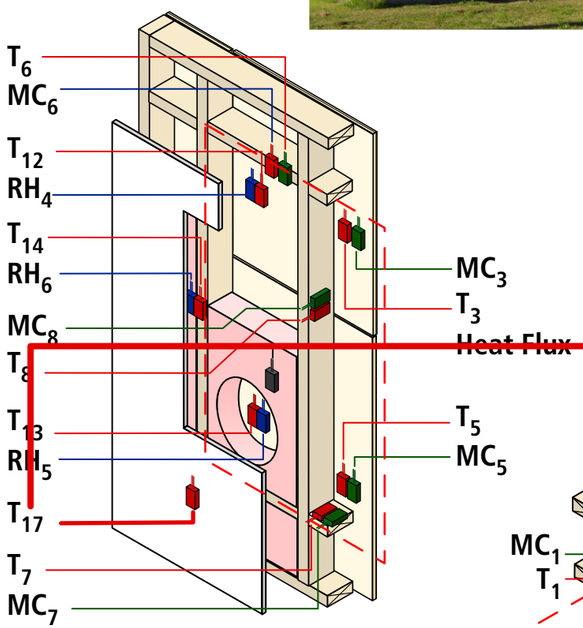
T_6
MC_6
T_{12}
RH_4
T_{14}
RH_6
MC_8
T_8
T_{13}
RH_5
T_{17}
T_7
MC_7
MC_3
T_3
Heat Flux
T_5
MC_5

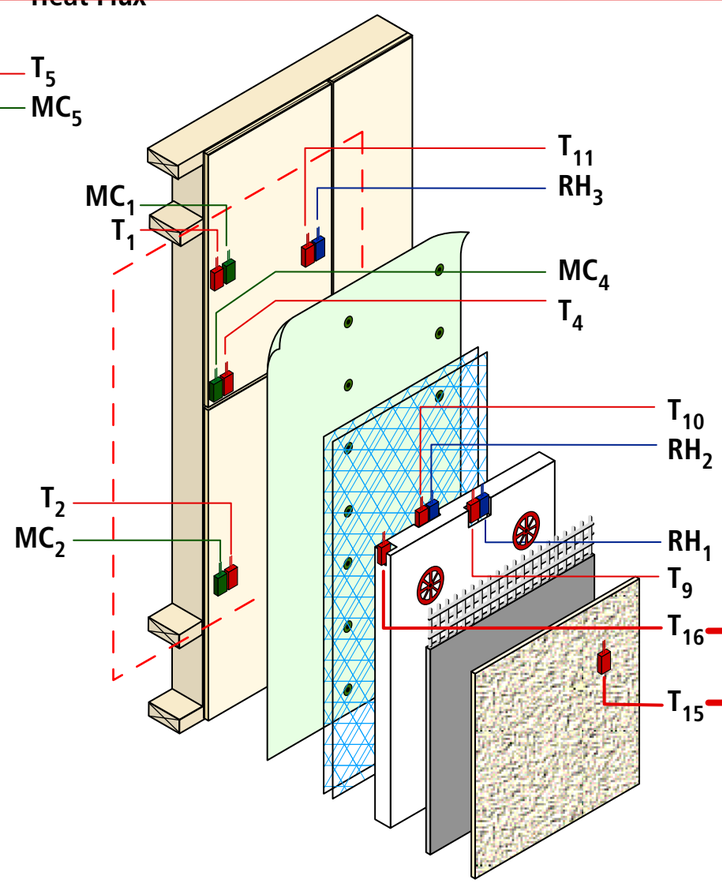
T_{11}
RH_3
MC_1
T_1
MC_4
T_4
T_{10}
RH_2
T_2
MC_2
RH_1
T_9
T_{16}
T_{15}

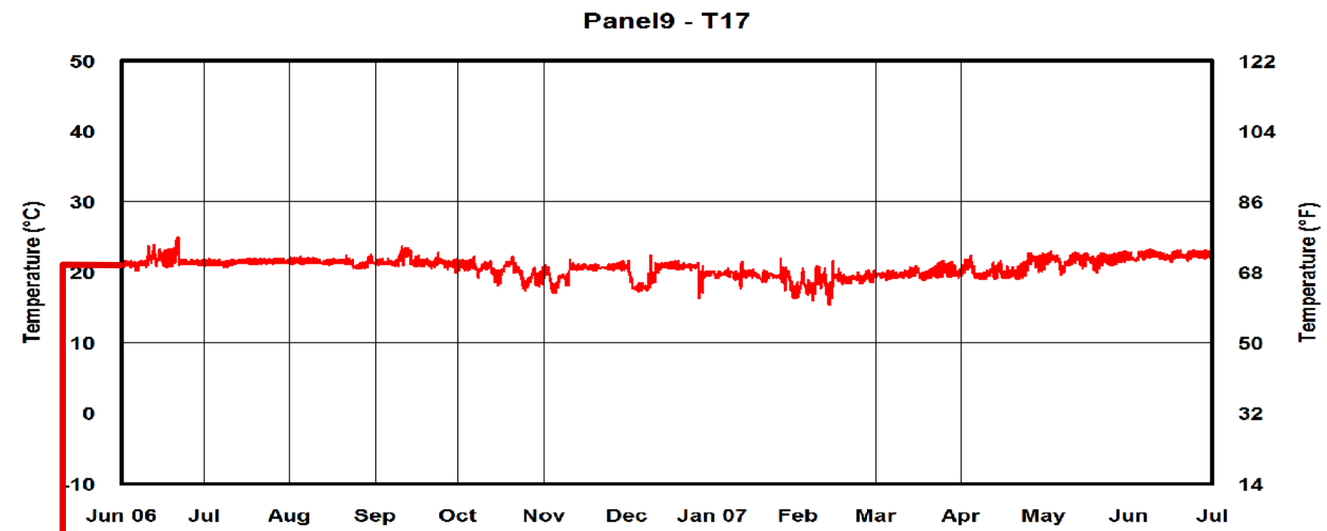
Panel9 - T17
Temperature (°C)
Temperature (°F)
50
40
30
20
10
0
-10
122
104
86
68
50
32
14
Jun 06
Jul
Aug
Sep
Oct
Nov
Dec
Jan 07
Feb
Mar
Apr
May
Jun
Jul

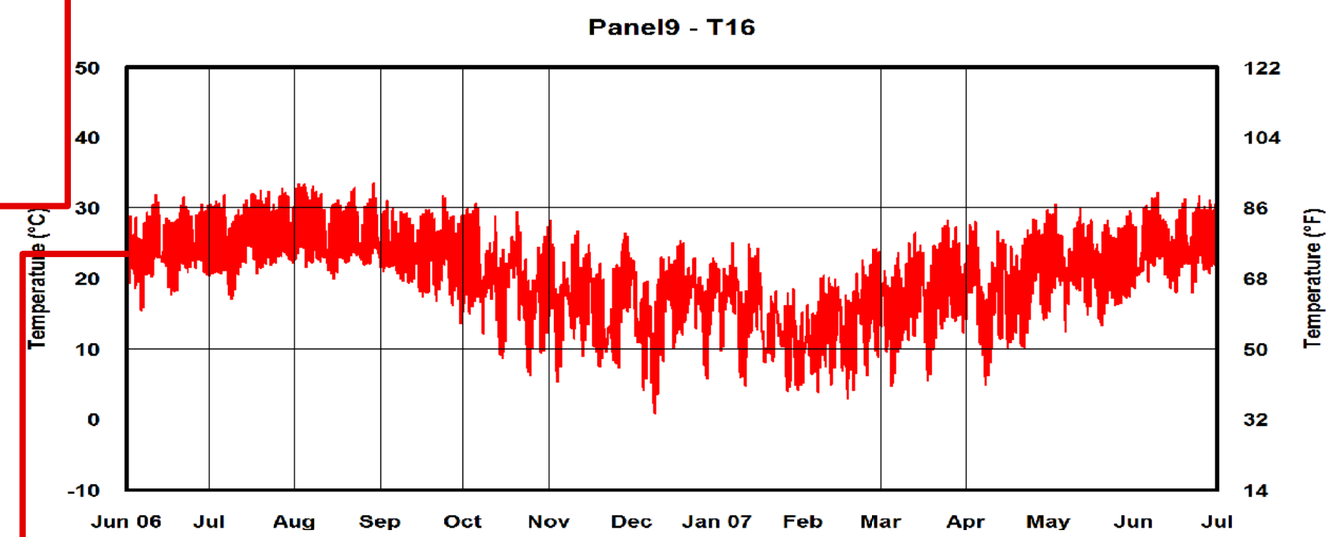
Panel9 - T16
Temperature (°C)
Temperature (°F)
50
40
30
20
10
0
-10
122
104
86
68
50
32
14
Jun 06
Jul
Aug
Sep
Oct
Nov
Dec
Jan 07
Feb
Mar
Apr
May
Jun
Jul

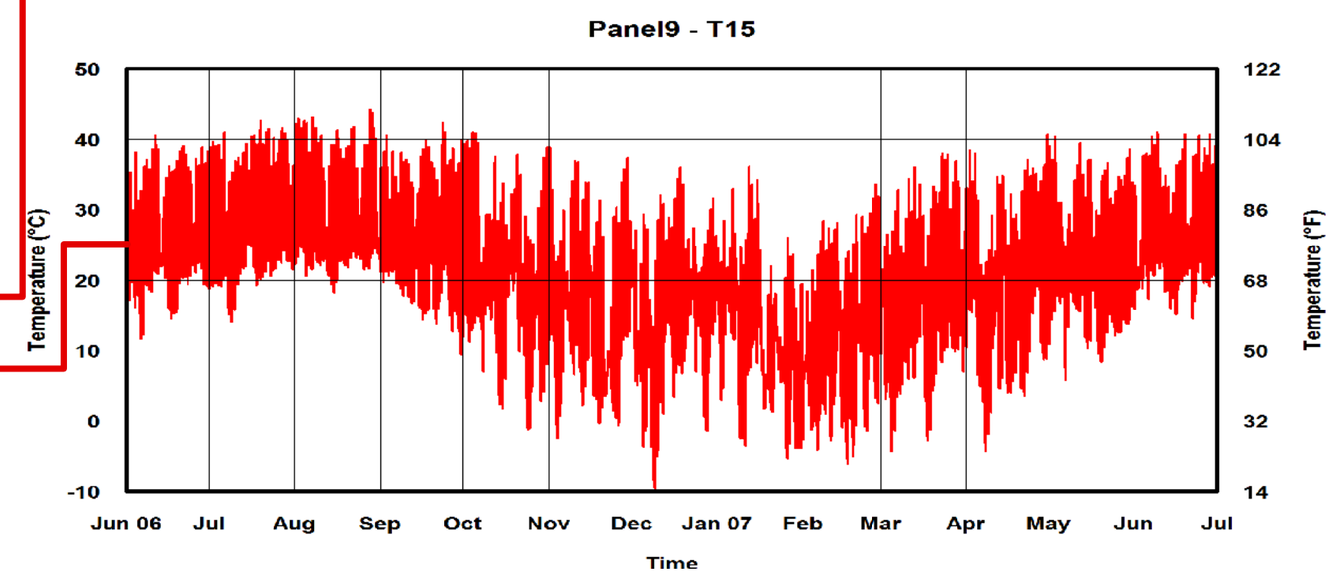
Panel9 - T15
Temperature (°C)
Temperature (°F)
50
40
30
20
10
0
-10
122
104
86
68
50
32
14
Jun 06
Jul
Aug
Sep
Oct
Nov
Dec
Jan 07
Feb
Mar
Apr
May
Jun
Jul
Time

Panel 9

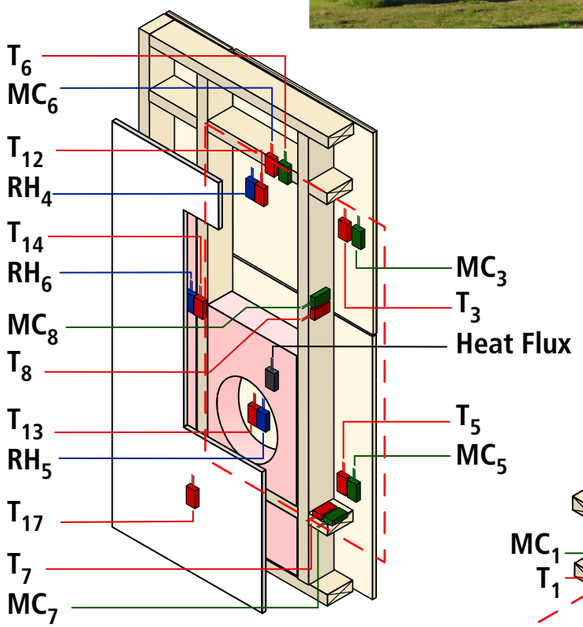
T_6
MC_6
T_{12}
RH_4
T_{14}
RH_6
MC_8
T_8
T_{13}
RH_5
T_{17}
T_7
MC_7
MC_3
T_3
Heat Flux
T_5
MC_5

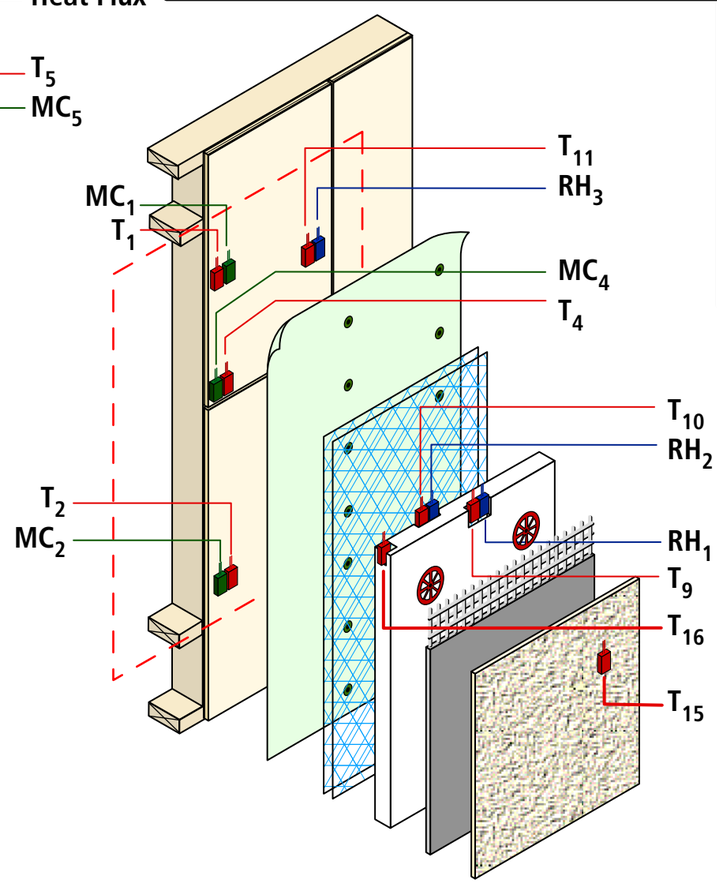
T_{11}
RH_3
MC_1
T_1
MC_4
T_4
T_{10}
RH_2
T_2
MC_2
RH_1
T_9
T_{16}
T_{15}

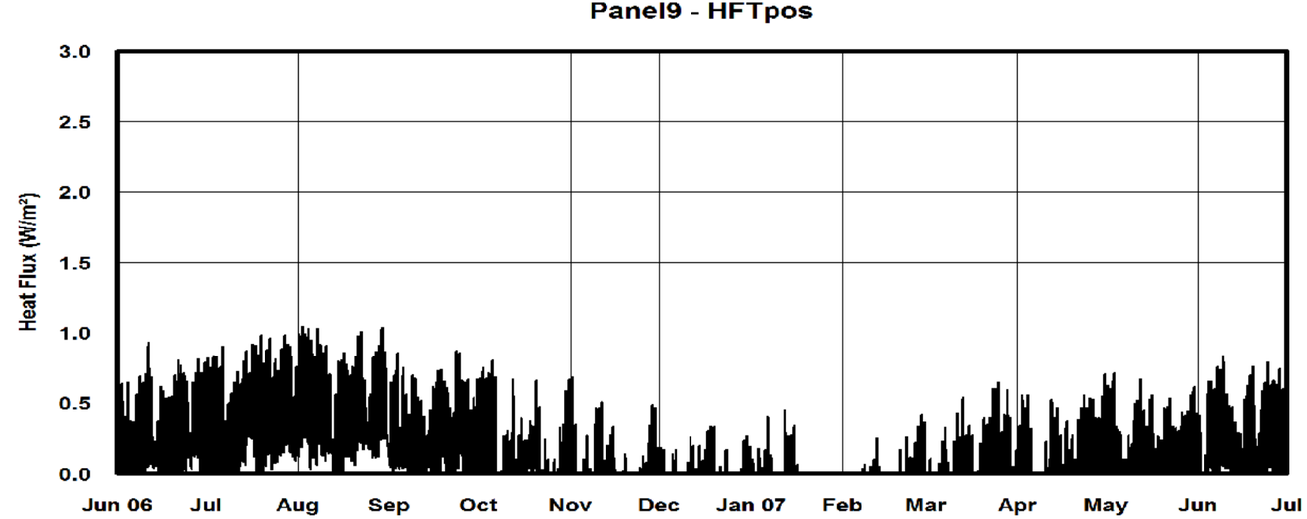
Panel9 - HFTpos
Heat Flux (W/m²)
3.0
2.5
2.0
1.5
1.0
0.5
0.0
Jun 06
Jul
Aug
Sep
Oct
Nov
Dec
Jan 07
Feb
Mar
Apr
May
Jun
Jul

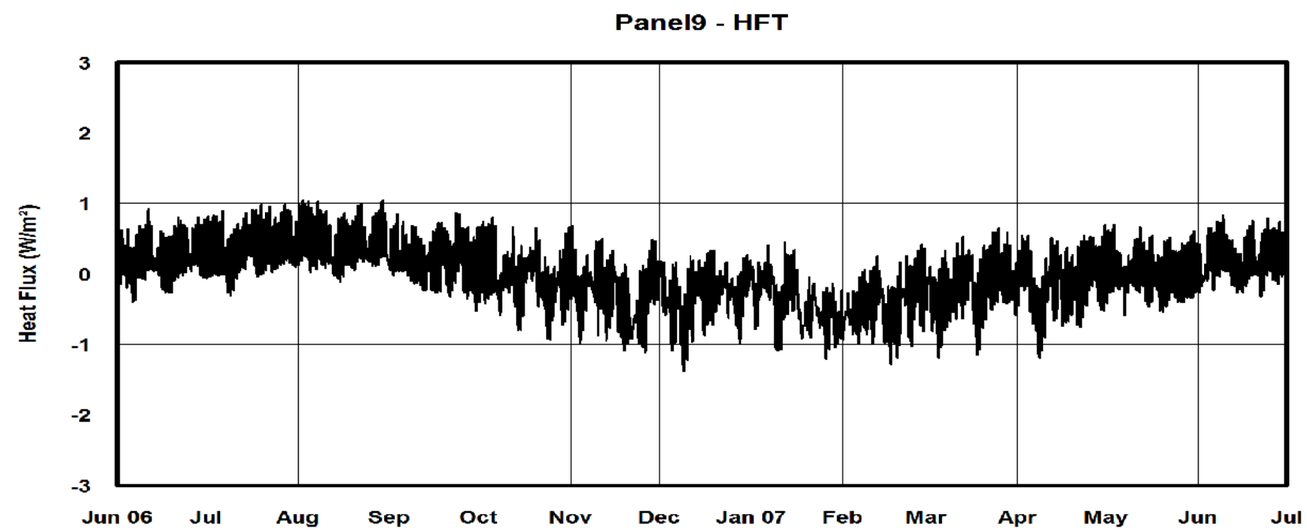
Panel9 - HFT
Heat Flux (W/m²)
3
2
1
0
-1
-2
-3
Jun 06
Jul
Aug
Sep
Oct
Nov
Dec
Jan 07
Feb
Mar
Apr
May
Jun
Jul

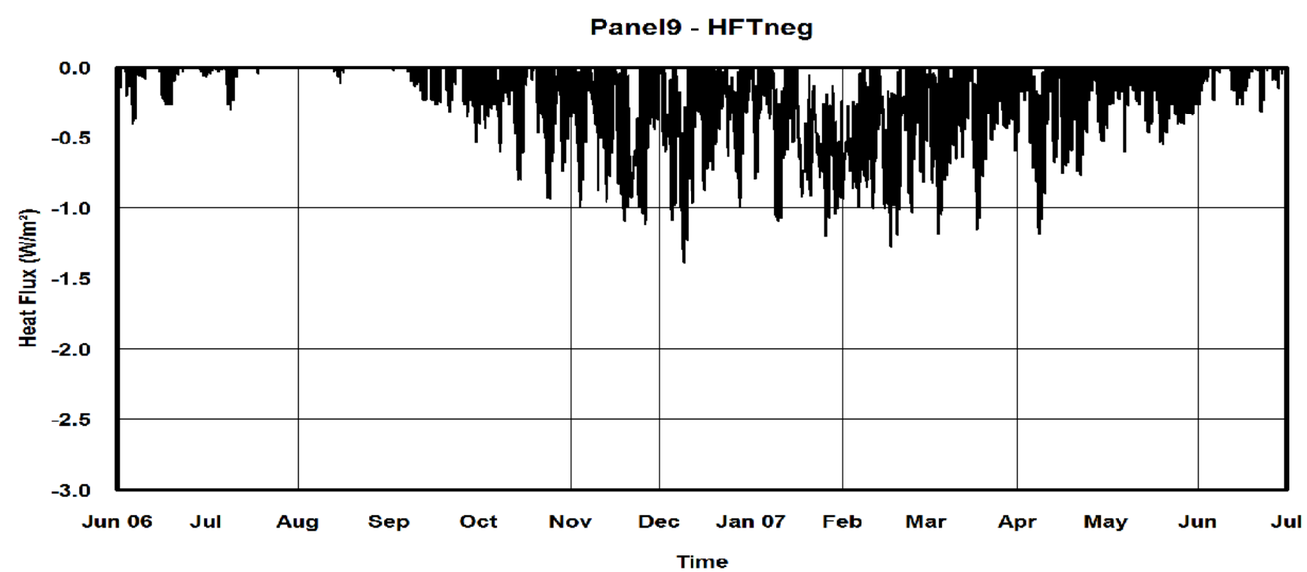
Panel9 - HFTneg
Heat Flux (W/m²)
0.0
-0.5
-1.0
-1.5
-2.0
-2.5
-3.0
Jun 06
Jul
Aug
Sep
Oct
Nov
Dec
Jan 07
Feb
Mar
Apr
May
Jun
Jul
Time

Panel 10

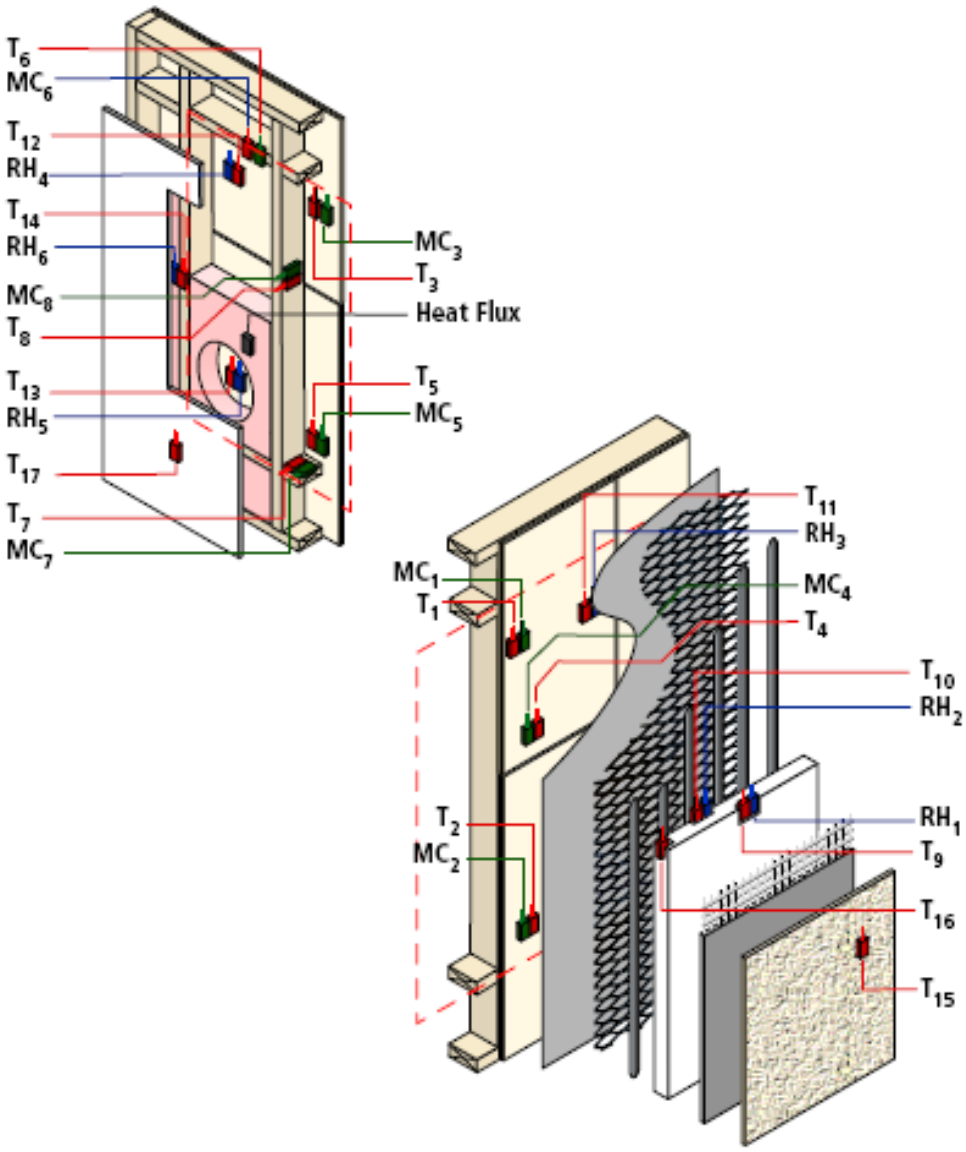
T_6
MC_6
T_{12}
RH_4
T_{14}
RH_6
MC_8
T_8
T_{13}
RH_5
T_{17}
T_7
MC_7
MC_3
T_3
Heat Flux
T_5
MC_5
T_{11}
RH_3
MC_1
T_1
MC_4
T_4
T_{10}
RH_2
T_2
MC_2
RH_1
T_9
T_{16}
T_{15}

Panel 10

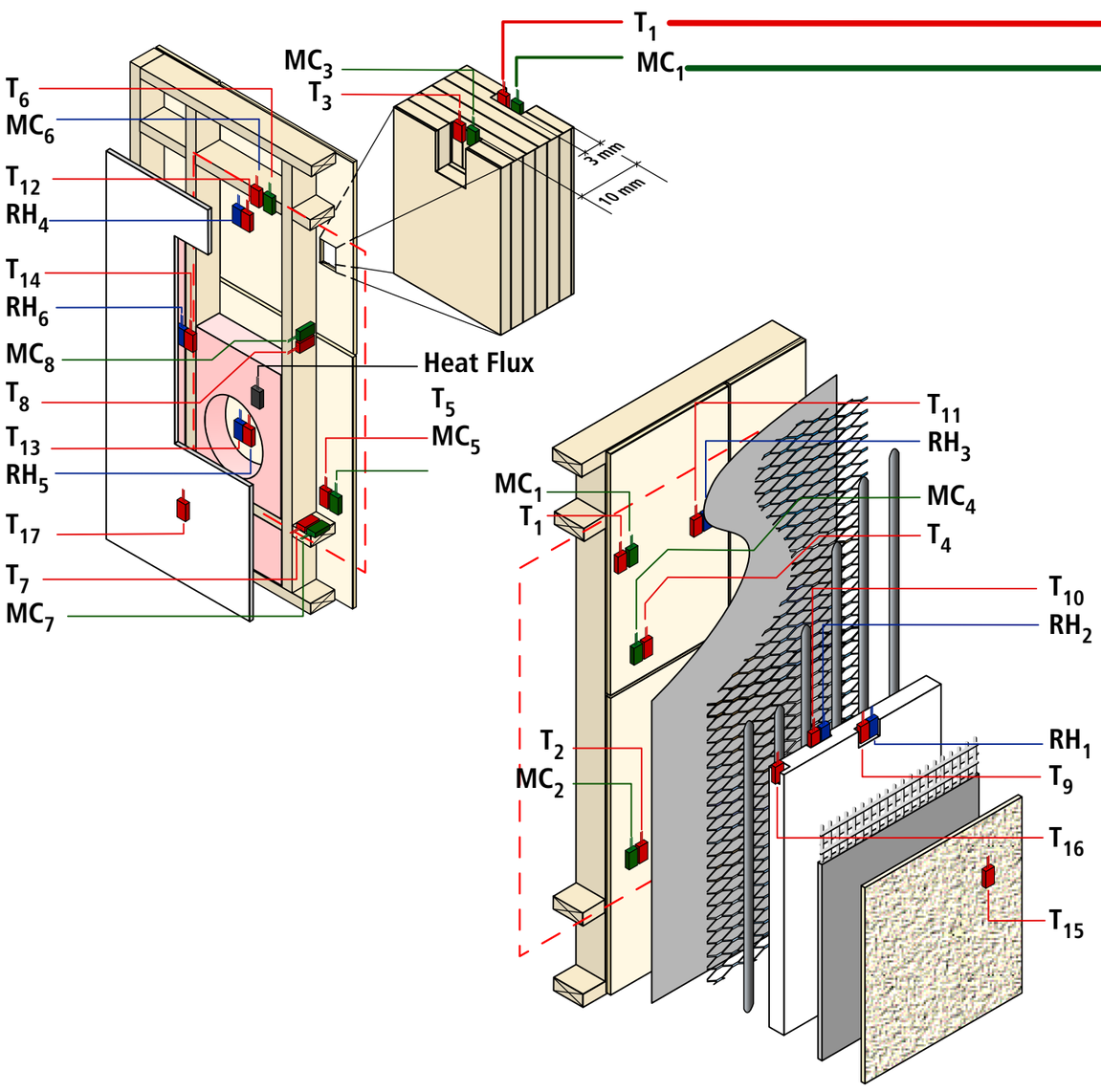
T_1
MC_1
MC_3
T_3
T_6
MC_6
T_{12}
RH_4
T_{14}
RH_6
MC_8
T_8
T_{13}
RH_5
T_{17}
T_7
MC_7
3 mm
10 mm
Heat Flux
T_5
MC_5
T_{11}
RH_3
MC_4
T_4
T_{10}
RH_2
RH_1
T_9
T_{16}
T_{15}
T_2
MC_2

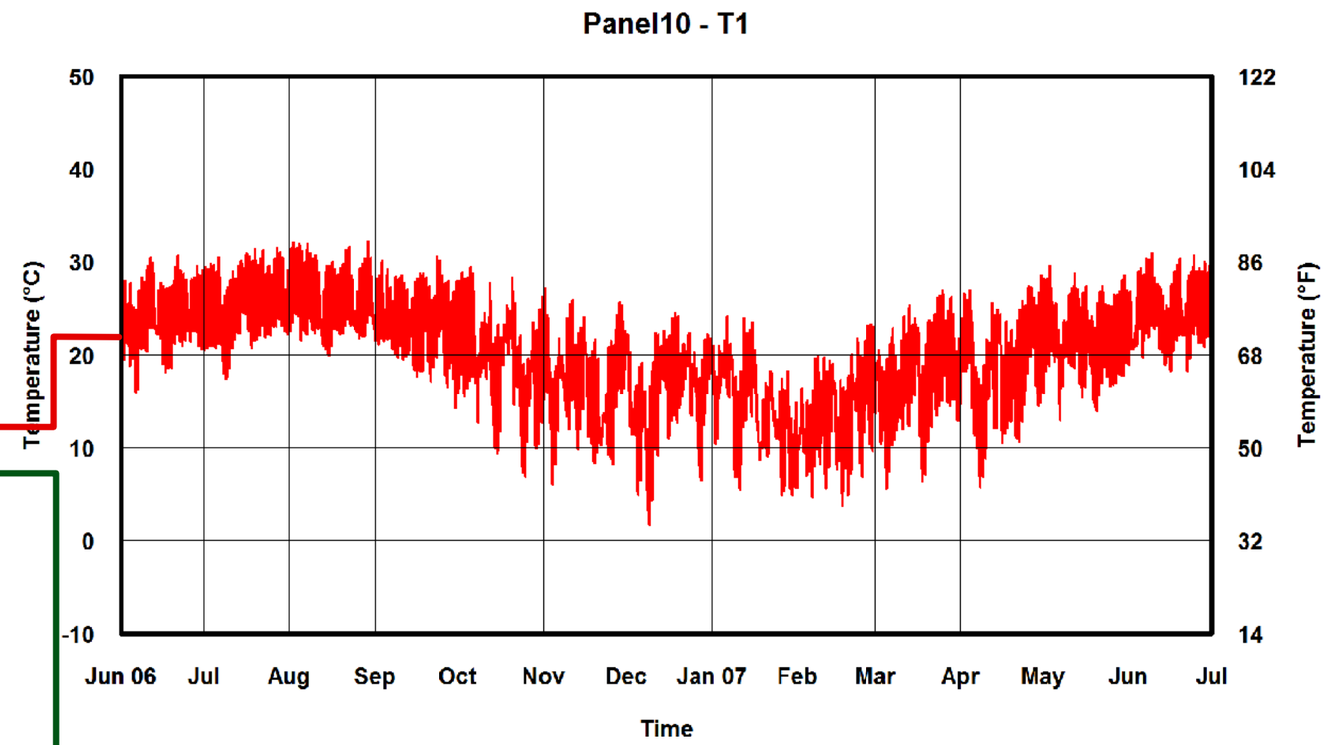
Panel10 - T1
Temperature (°C)
Temperature (°F)
50
40
30
20
10
0
-10
122
104
86
68
50
32
14
Jun 06
Jul
Aug
Sep
Oct
Nov
Dec
Jan 07
Feb
Mar
Apr
May
Jun
Jul
Time

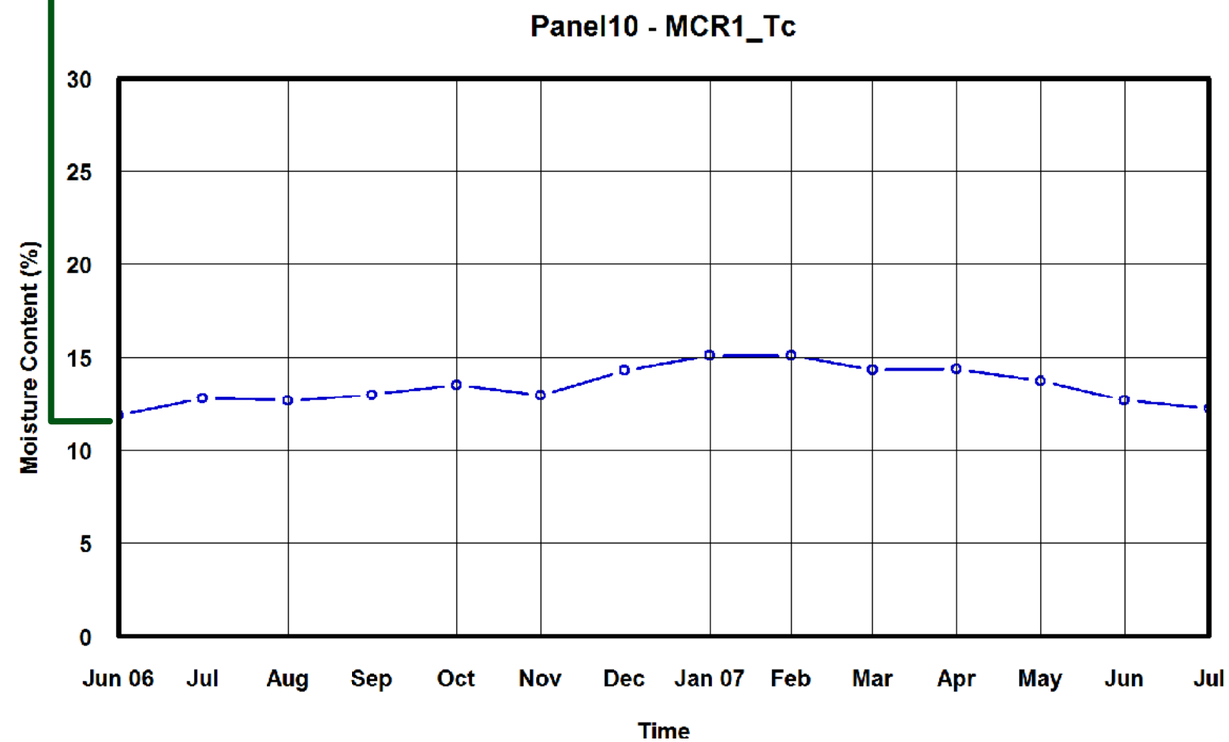
Panel10 - MCR1_Tc
Moisture Content (%)
30
25
20
15
10
5
0
Jun 06
Jul
Aug
Sep
Oct
Nov
Dec
Jan 07
Feb
Mar
Apr
May
Jun
Jul
Time

Panel 10

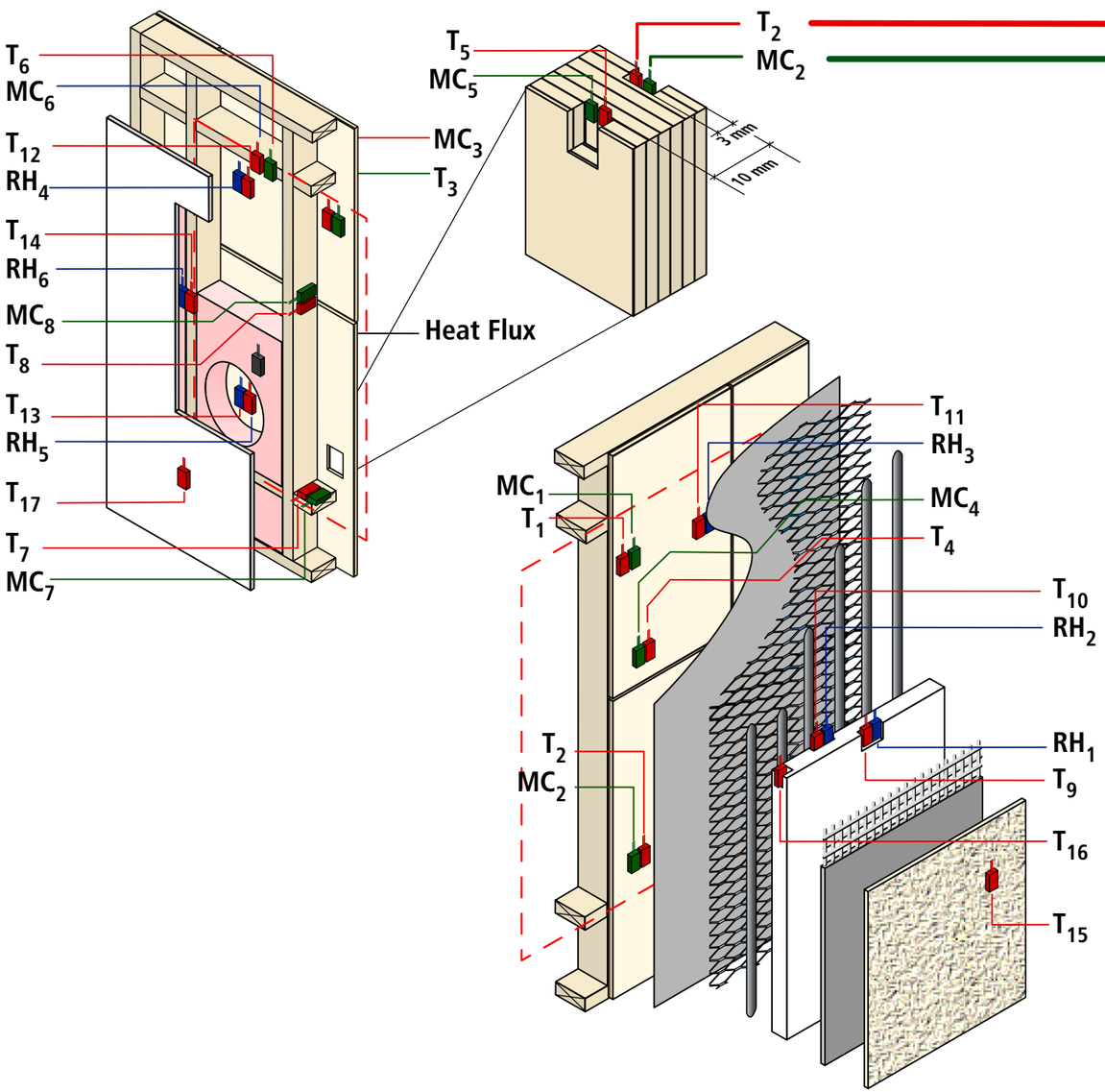
T_6
MC_6
T_{12}
RH_4
T_{14}
RH_6
MC_8
T_8
T_{13}
RH_5
T_{17}
T_7
MC_7
T_5
MC_5
T_2
MC_2
MC_3
T_3
3 mm
10 mm
Heat Flux
T_{11}
RH_3
MC_1
T_1
MC_4
T_4
T_{10}
RH_2
T_2
MC_2
RH_1
T_9
T_{16}
T_{15}

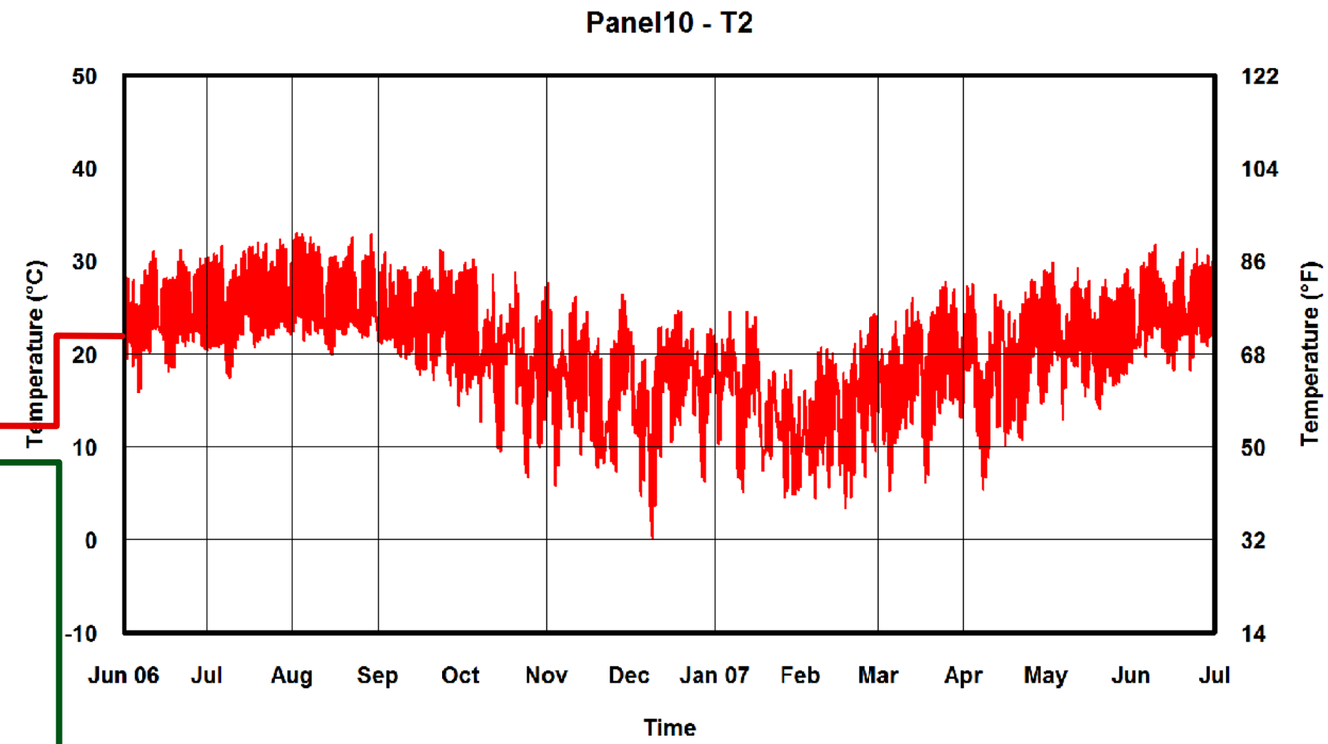
Panel10 - T2
Temperature (°C)
Temperature (°F)
50
40
30
20
10
0
-10
122
104
86
68
50
32
14
Jun 06
Jul
Aug
Sep
Oct
Nov
Dec
Jan 07
Feb
Mar
Apr
May
Jun
Jul
Time

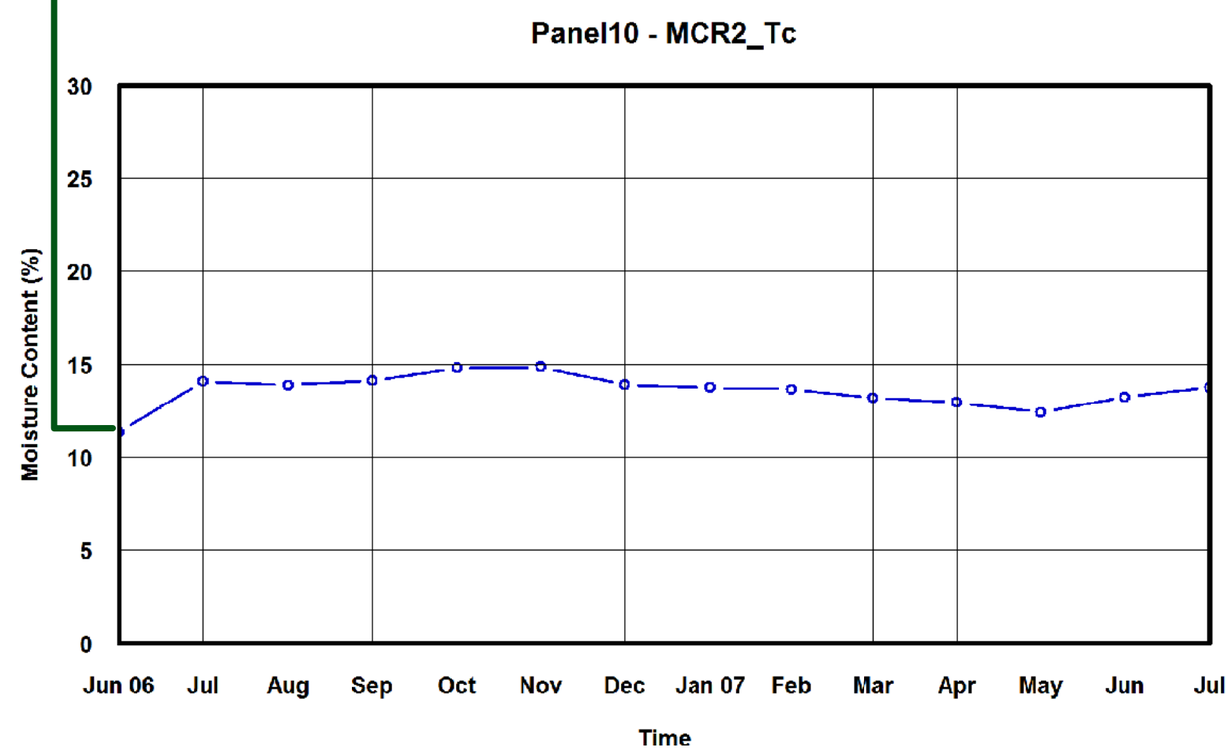
Panel10 - MCR2_Tc
Moisture Content (%)
30
25
20
15
10
5
0
Jun 06
Jul
Aug
Sep
Oct
Nov
Dec
Jan 07
Feb
Mar
Apr
May
Jun
Jul
Time

Panel 10

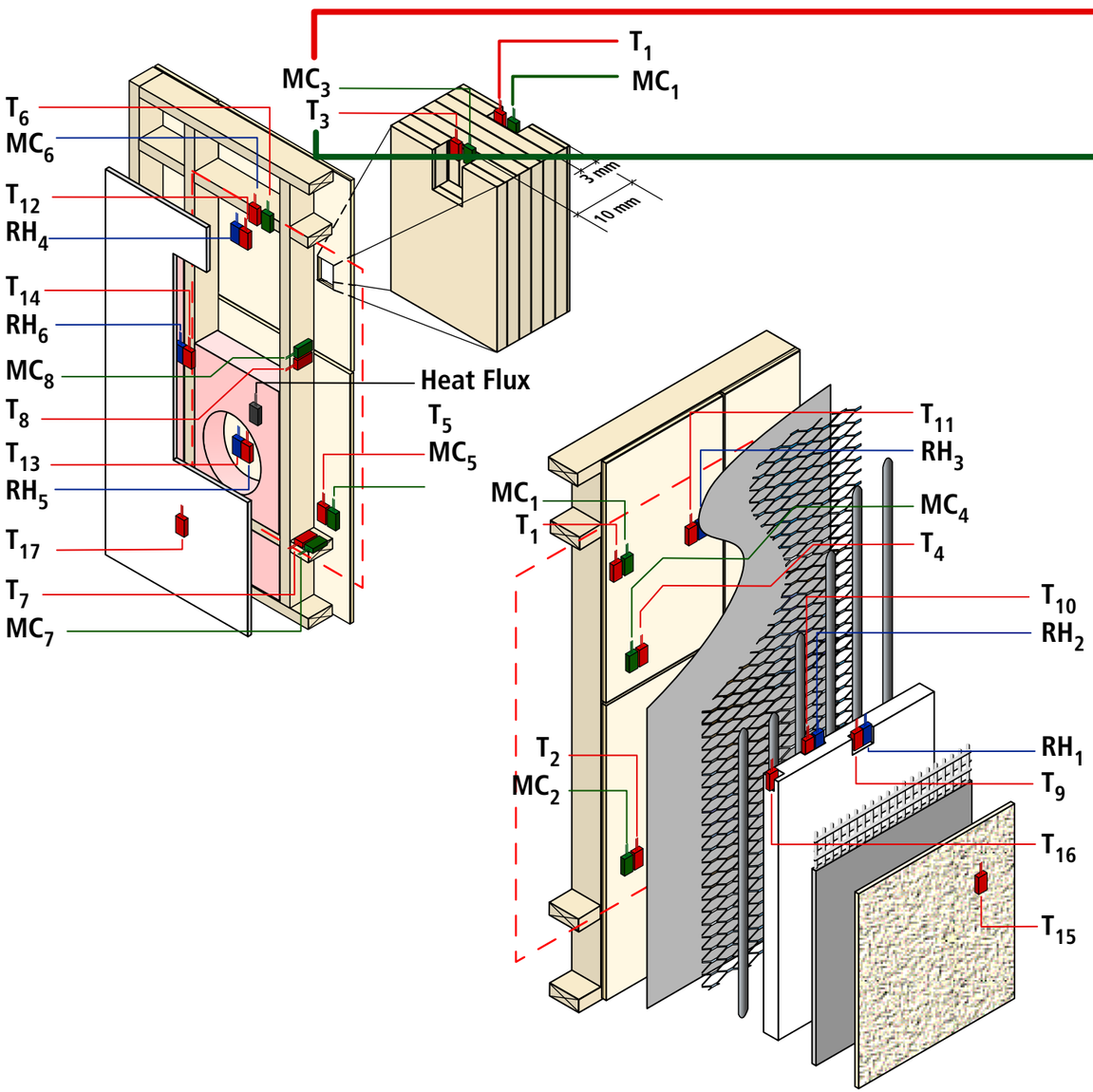
T_6
MC_6
T_{12}
RH_4
T_{14}
RH_6
MC_8
T_8
T_{13}
RH_5
T_{17}
T_7
MC_7
MC_3
T_3
T_1
MC_1
3 mm
10 mm
Heat Flux
T_5
MC_5
MC_1
T_1
T_{11}
RH_3
MC_4
T_4
T_{10}
RH_2
T_2
MC_2
RH_1
T_9
T_{16}
T_{15}

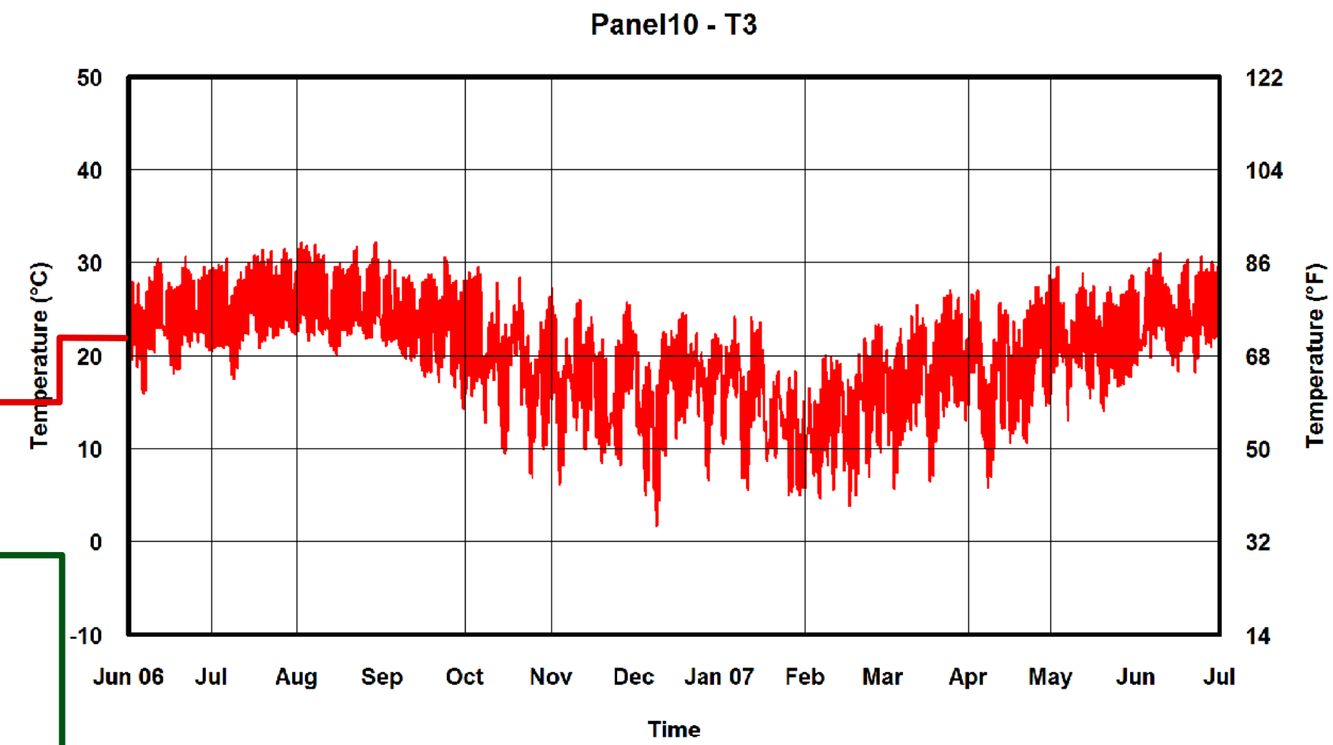
Panel10 - T3
Temperature (°C)
50
40
30
20
10
0
-10
Temperature (°F)
122
104
86
68
50
32
14
Jun 06
Jul
Aug
Sep
Oct
Nov
Dec
Jan 07
Feb
Mar
Apr
May
Jun
Jul
Time

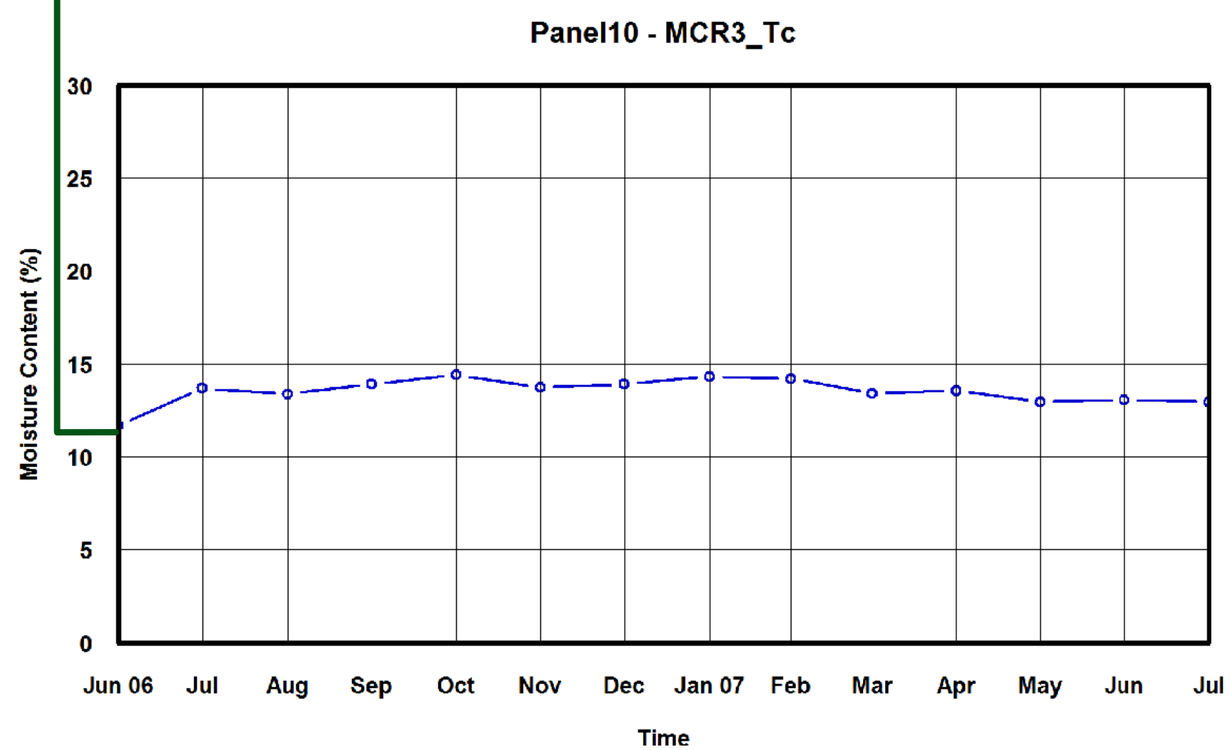
Panel10 - MCR3_Tc
Moisture Content (%)
30
25
20
15
10
5
0
Jun 06
Jul
Aug
Sep
Oct
Nov
Dec
Jan 07
Feb
Mar
Apr
May
Jun
Jul
Time

Panel 10

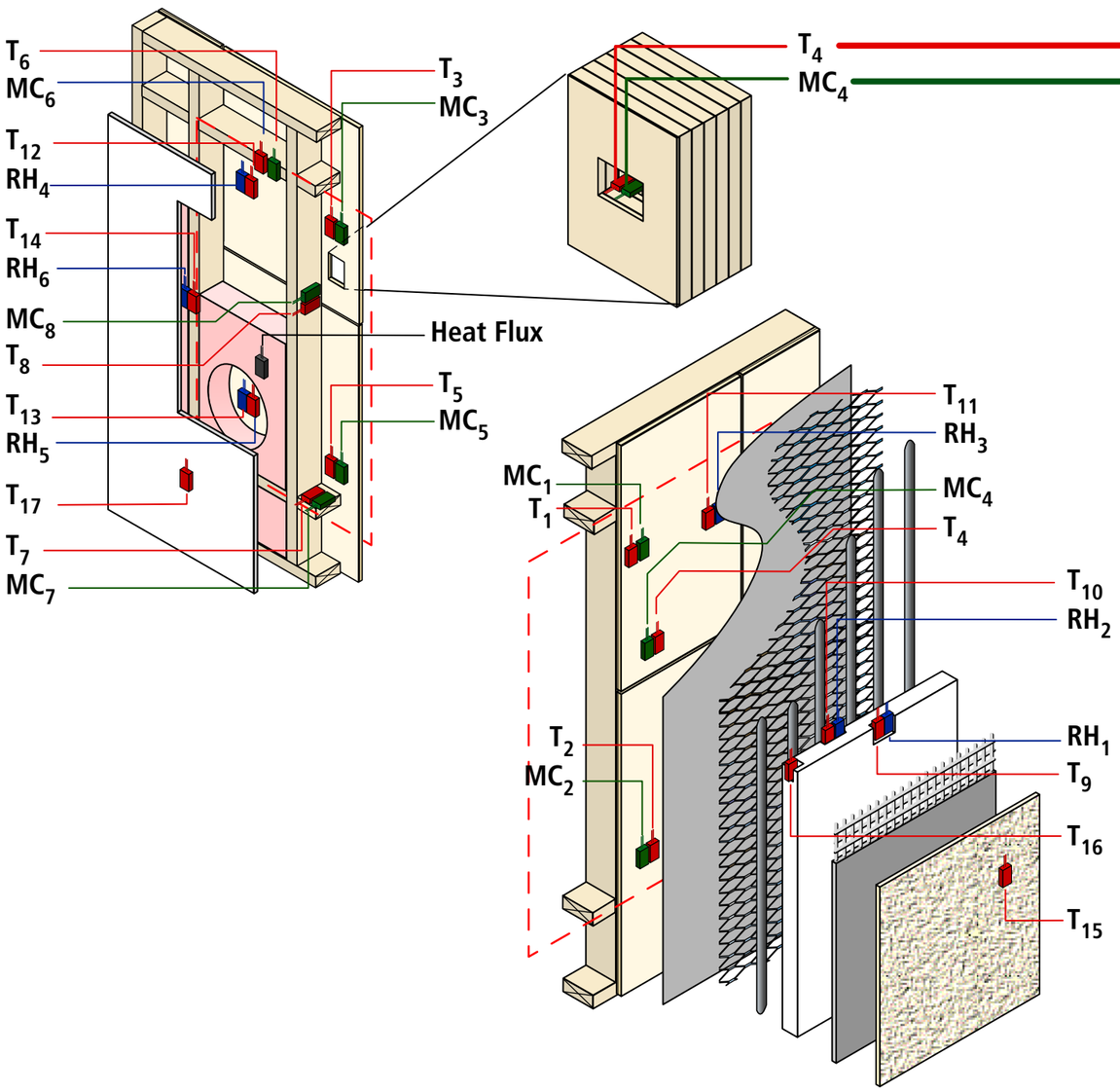
T_6
MC_6
T_{12}
RH_4
T_{14}
RH_6
MC_8
T_8
T_{13}
RH_5
T_{17}
T_7
MC_7
T_3
MC_3
Heat Flux
T_5
MC_5
T_4
MC_4
T_{11}
RH_3
MC_4
T_4
T_{10}
RH_2
RH_1
T_9
T_{16}
T_{15}
MC_1
T_1
T_2
MC_2

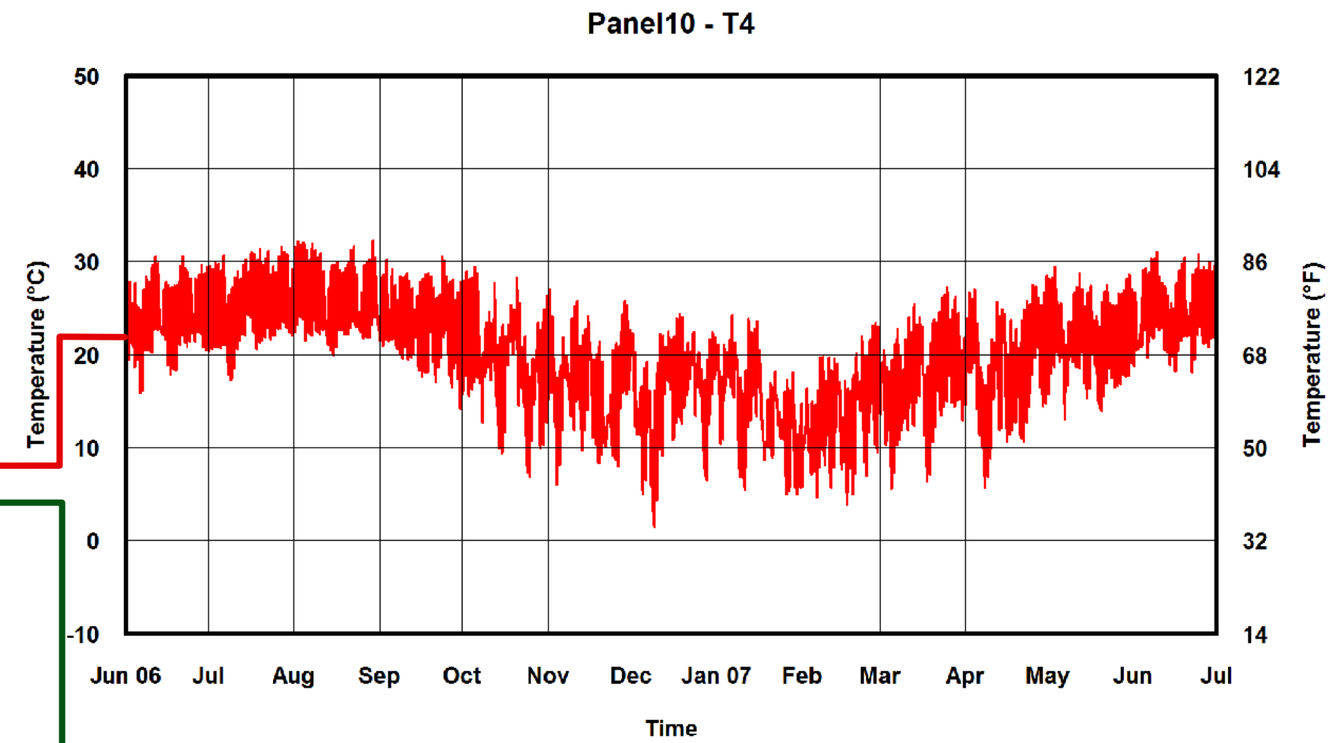
Panel10 - T4
Temperature (°C)
Temperature (°F)
50
40
30
20
10
0
-10
122
104
86
68
50
32
14
Jun 06
Jul
Aug
Sep
Oct
Nov
Dec
Jan 07
Feb
Mar
Apr
May
Jun
Jul
Time

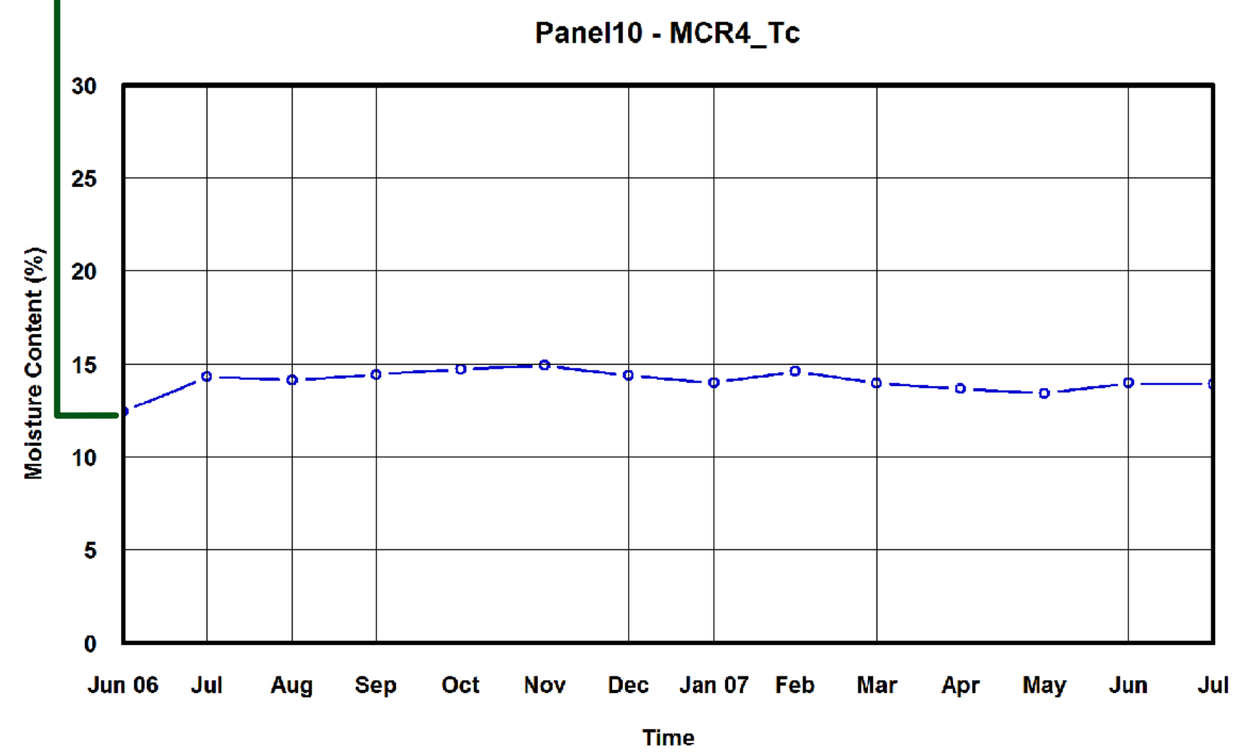
Panel10 - MCR4_Tc
Moisture Content (%)
30
25
20
15
10
5
0
Jun 06
Jul
Aug
Sep
Oct
Nov
Dec
Jan 07
Feb
Mar
Apr
May
Jun
Jul
Time

Panel 10

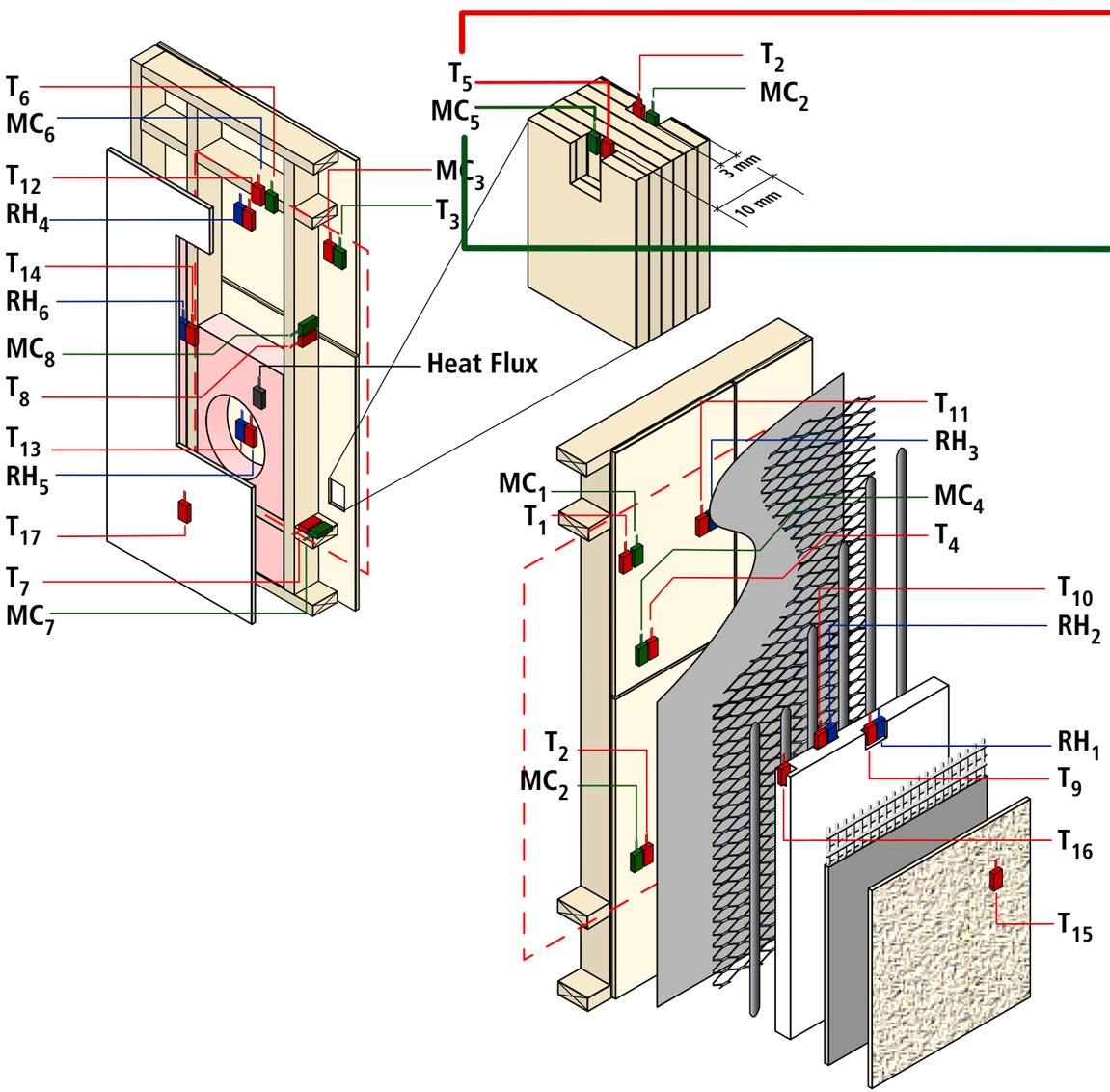
T_6
MC_6
T_{12}
RH_4
T_{14}
RH_6
MC_8
T_8
T_{13}
RH_5
T_{17}
T_7
MC_7
T_5
MC_5
MC_3
T_3
Heat Flux
T_2
MC_2
3 mm
10 mm
T_{11}
RH_3
MC_4
T_4
MC_1
T_1
T_{10}
RH_2
T_2
MC_2
RH_1
T_9
T_{16}
T_{15}

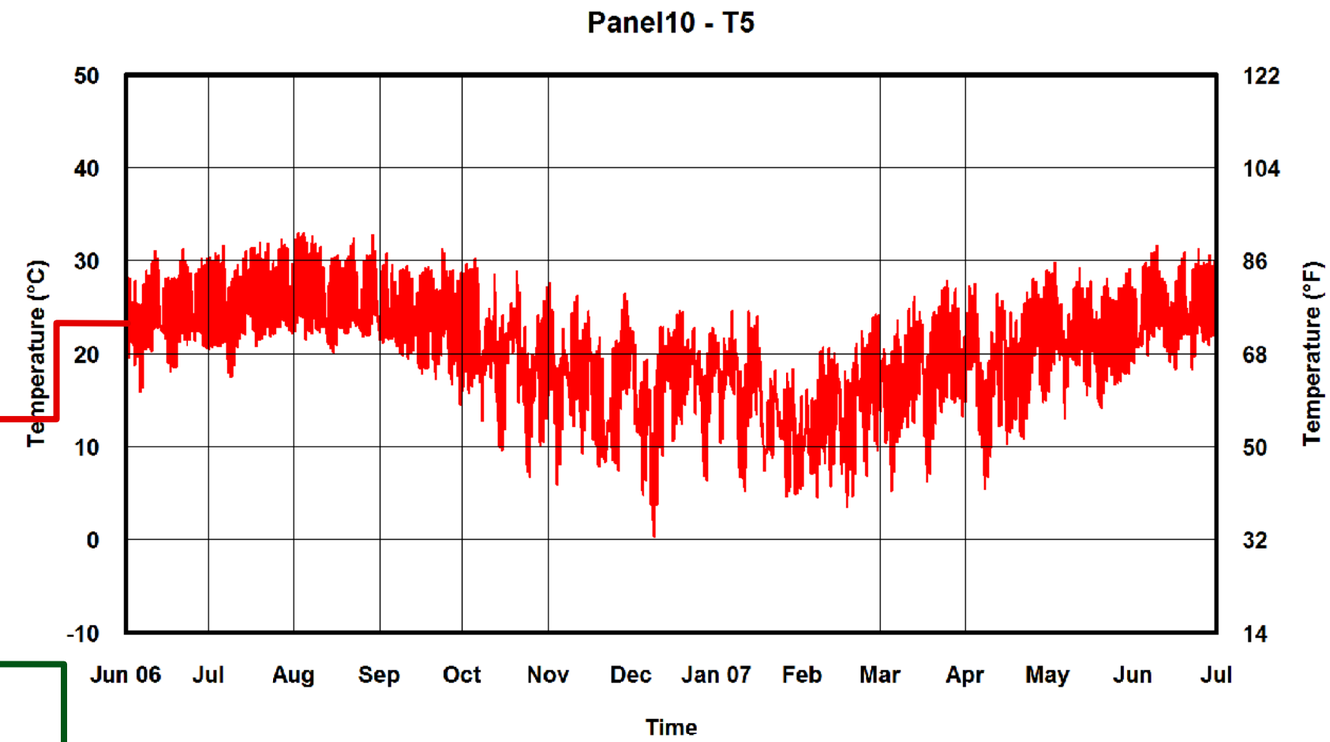
Panel10 - T5
Temperature (°C)
Temperature (°F)
50
40
30
20
10
0
-10
122
104
86
68
50
32
14
Jun 06
Jul
Aug
Sep
Oct
Nov
Dec
Jan 07
Feb
Mar
Apr
May
Jun
Jul
Time

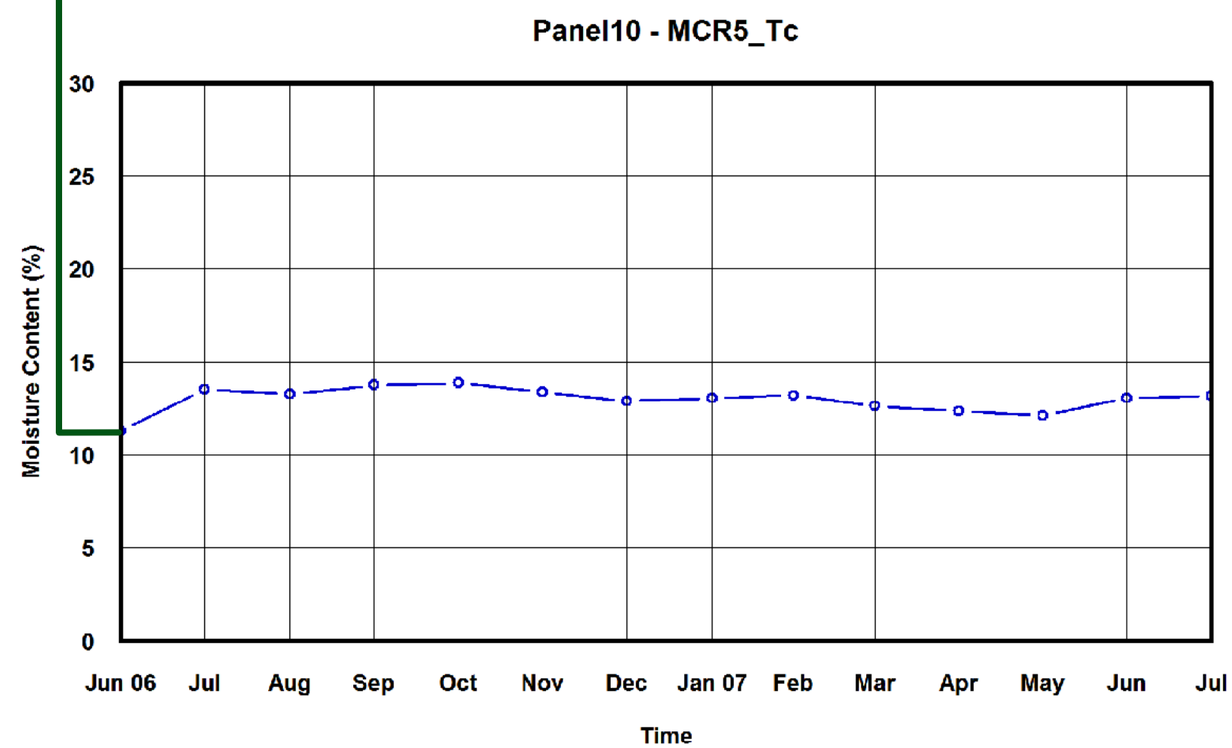
Panel10 - MCR5_Tc
Moisture Content (%)
30
25
20
15
10
5
0
Jun 06
Jul
Aug
Sep
Oct
Nov
Dec
Jan 07
Feb
Mar
Apr
May
Jun
Jul
Time

Panel 10

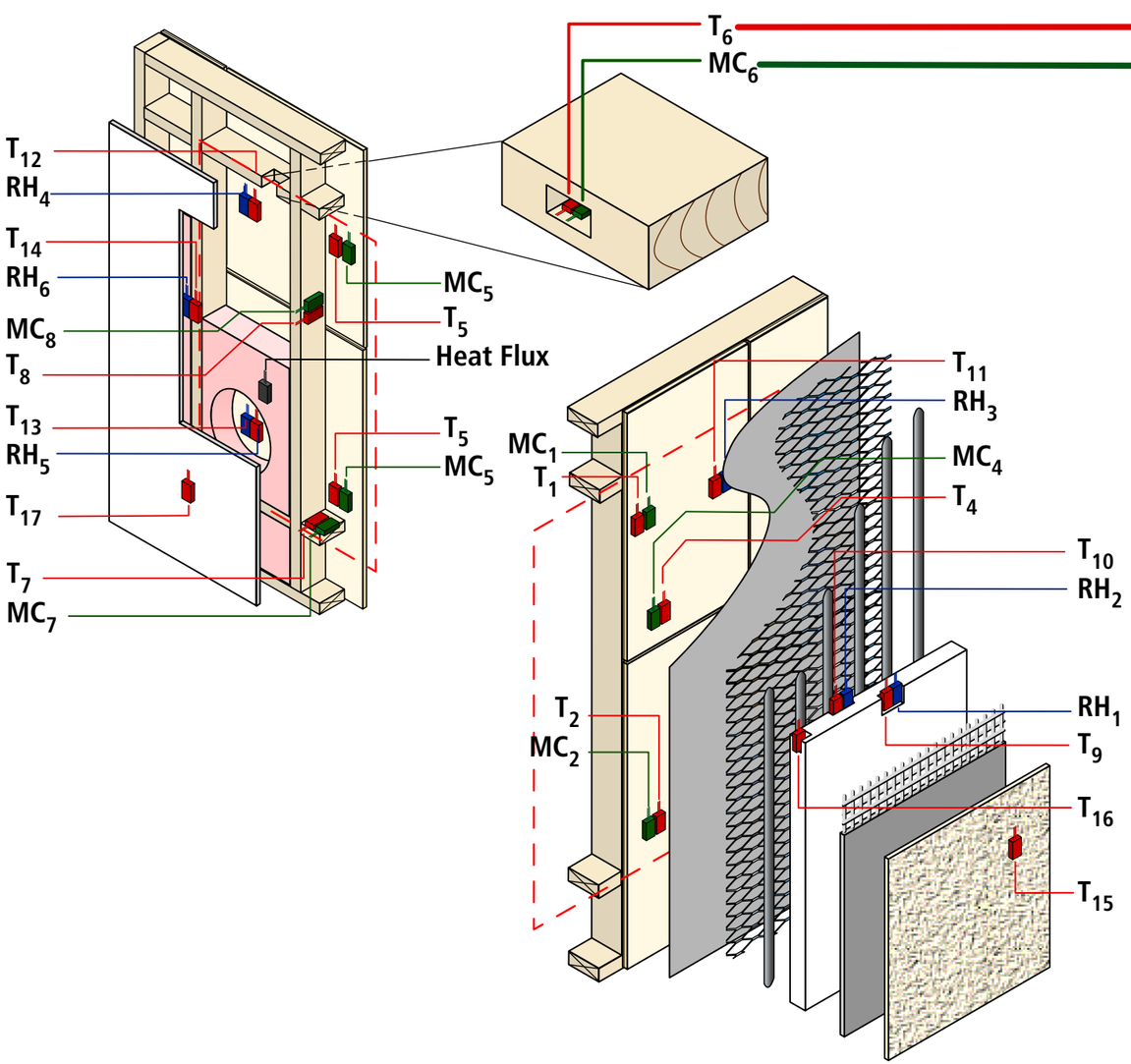
T_6
MC_6
T_{12}
RH_4
T_{14}
RH_6
MC_8
T_8
T_{13}
RH_5
T_{17}
T_7
MC_7
MC_5
T_5
Heat Flux
T_5
MC_5
MC_1
T_1
T_2
MC_2
T_{11}
RH_3
MC_4
T_4
T_{10}
RH_2
RH_1
T_9
T_{16}
T_{15}

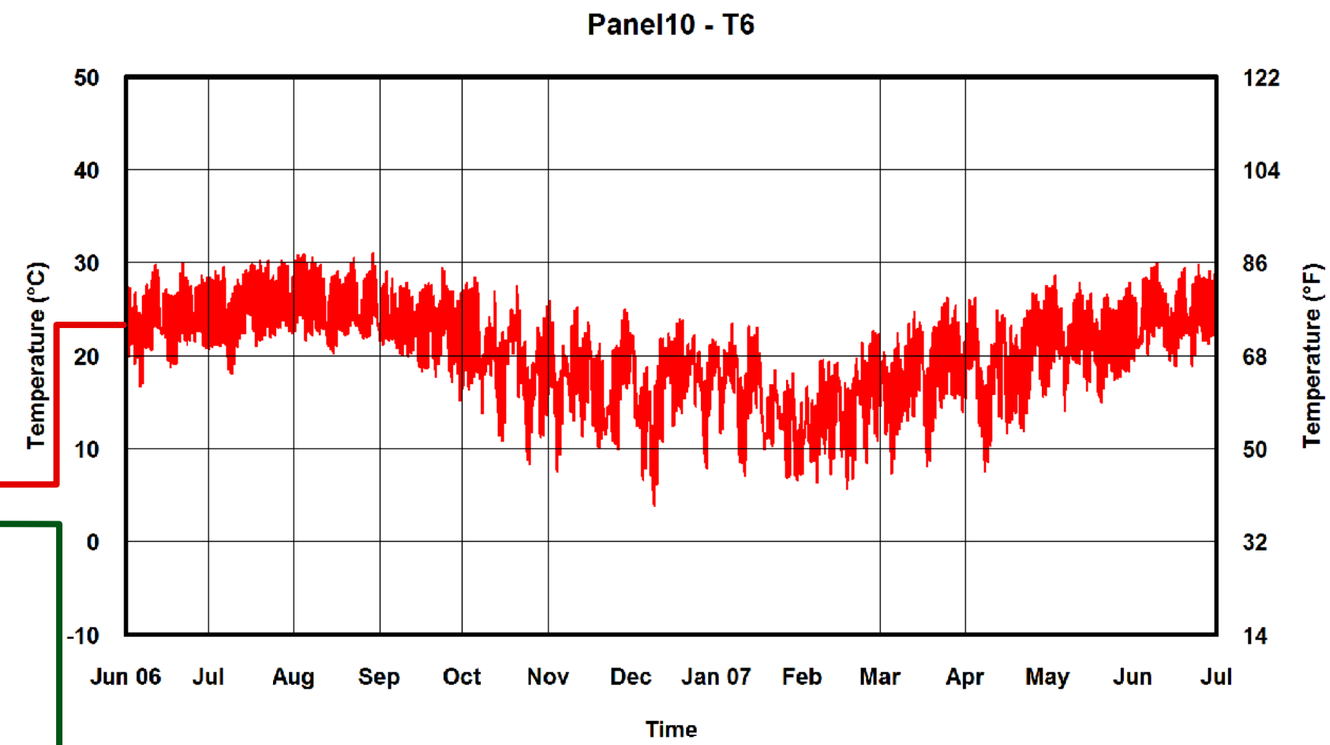
Panel10 - T6
Temperature (°C)
50
40
30
20
10
0
-10
Temperature (°F)
122
104
86
68
50
32
14
Jun 06
Jul
Aug
Sep
Oct
Nov
Dec
Jan 07
Feb
Mar
Apr
May
Jun
Jul
Time

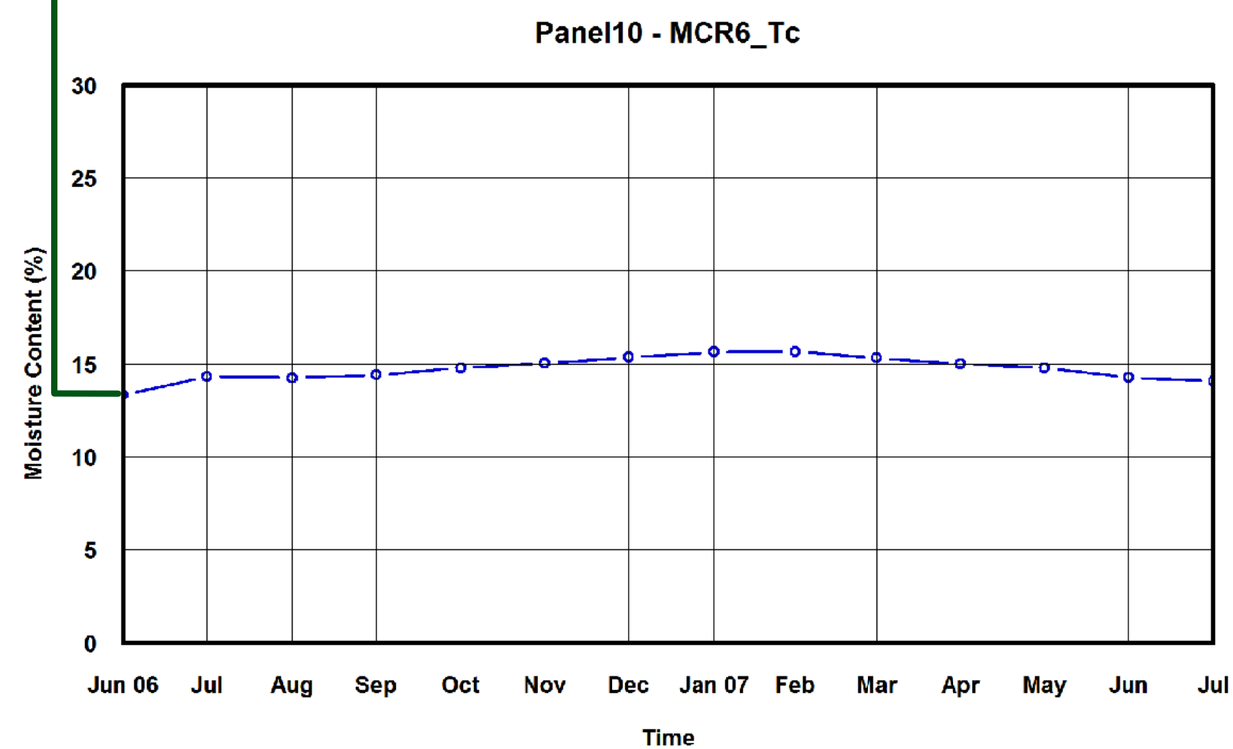
Panel10 - MCR6_Tc
Moisture Content (%)
30
25
20
15
10
5
0
Jun 06
Jul
Aug
Sep
Oct
Nov
Dec
Jan 07
Feb
Mar
Apr
May
Jun
Jul
Time

Panel 10

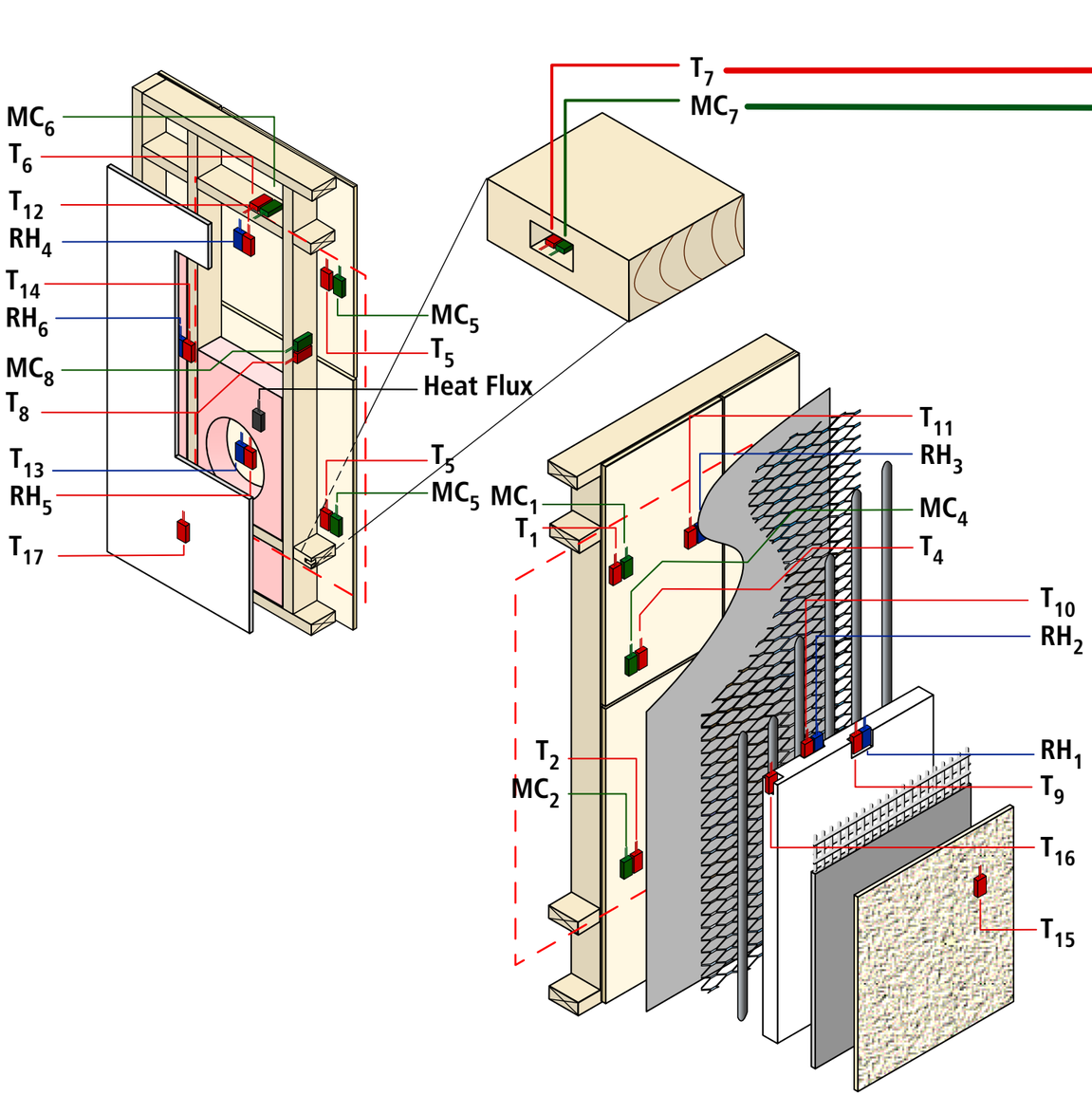
MC_6
T_6
T_{12}
RH_4
T_{14}
RH_6
MC_8
T_8
T_{13}
RH_5
T_{17}
T_7
MC_7
MC_5
T_5
Heat Flux
T_5
MC_5
MC_1
T_1
T_{11}
RH_3
MC_4
T_4
T_{10}
RH_2
T_2
MC_2
RH_1
T_9
T_{16}
T_{15}

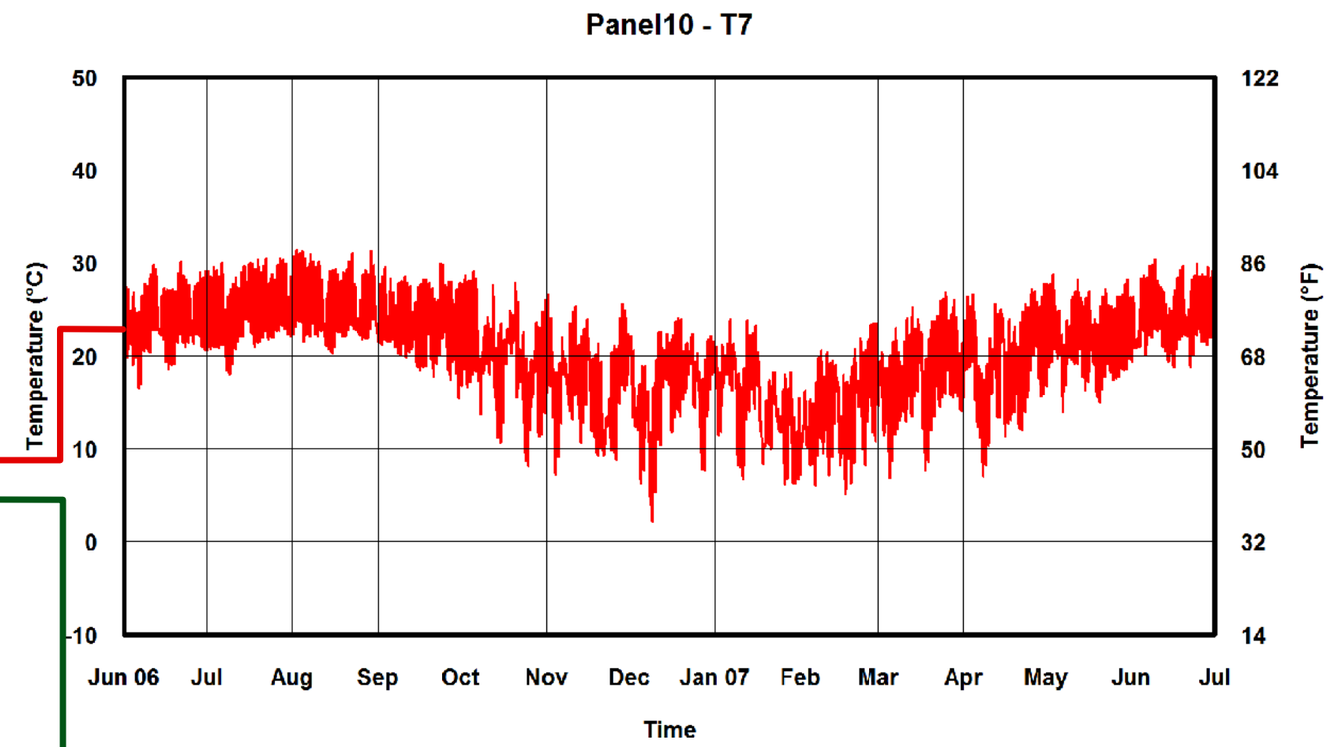
Panel10 - T7
Temperature (°C)
50
40
30
20
10
0
-10
Temperature (°F)
122
104
86
68
50
32
14
Jun 06
Jul
Aug
Sep
Oct
Nov
Dec
Jan 07
Feb
Mar
Apr
May
Jun
Jul
Time

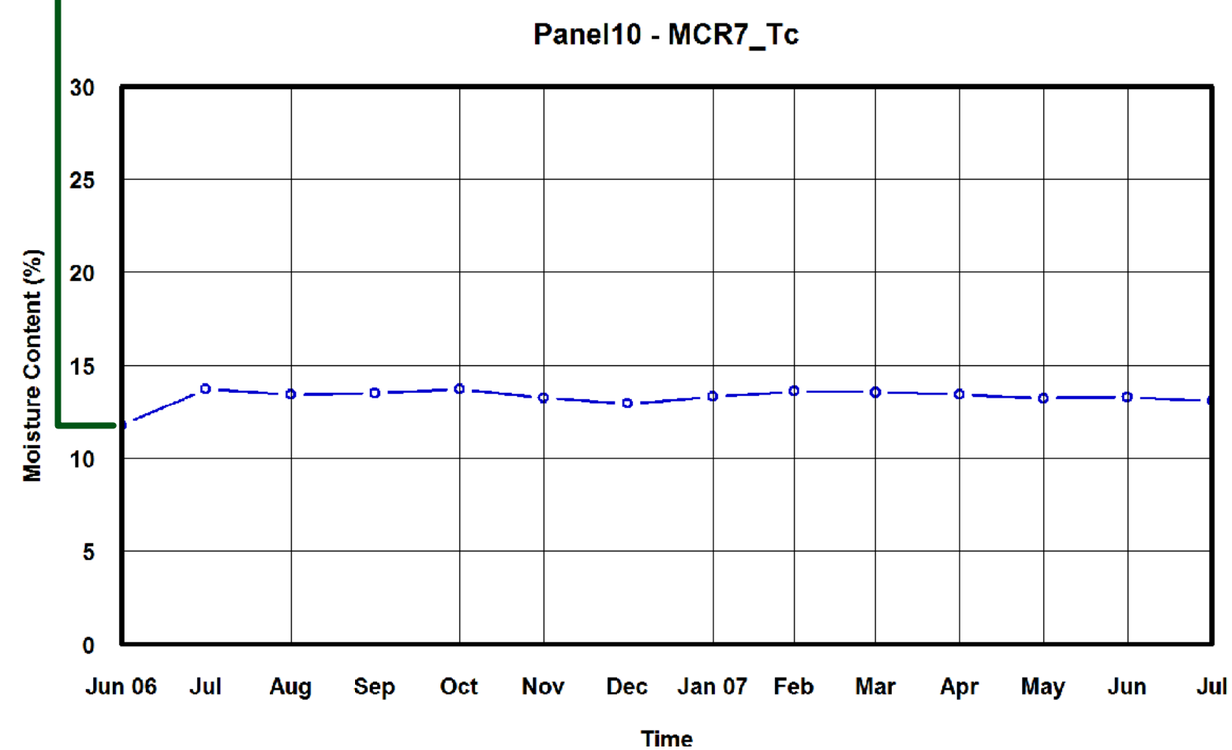
Panel10 - MCR7_Tc
Moisture Content (%)
30
25
20
15
10
5
0
Jun 06
Jul
Aug
Sep
Oct
Nov
Dec
Jan 07
Feb
Mar
Apr
May
Jun
Jul
Time

Panel 10

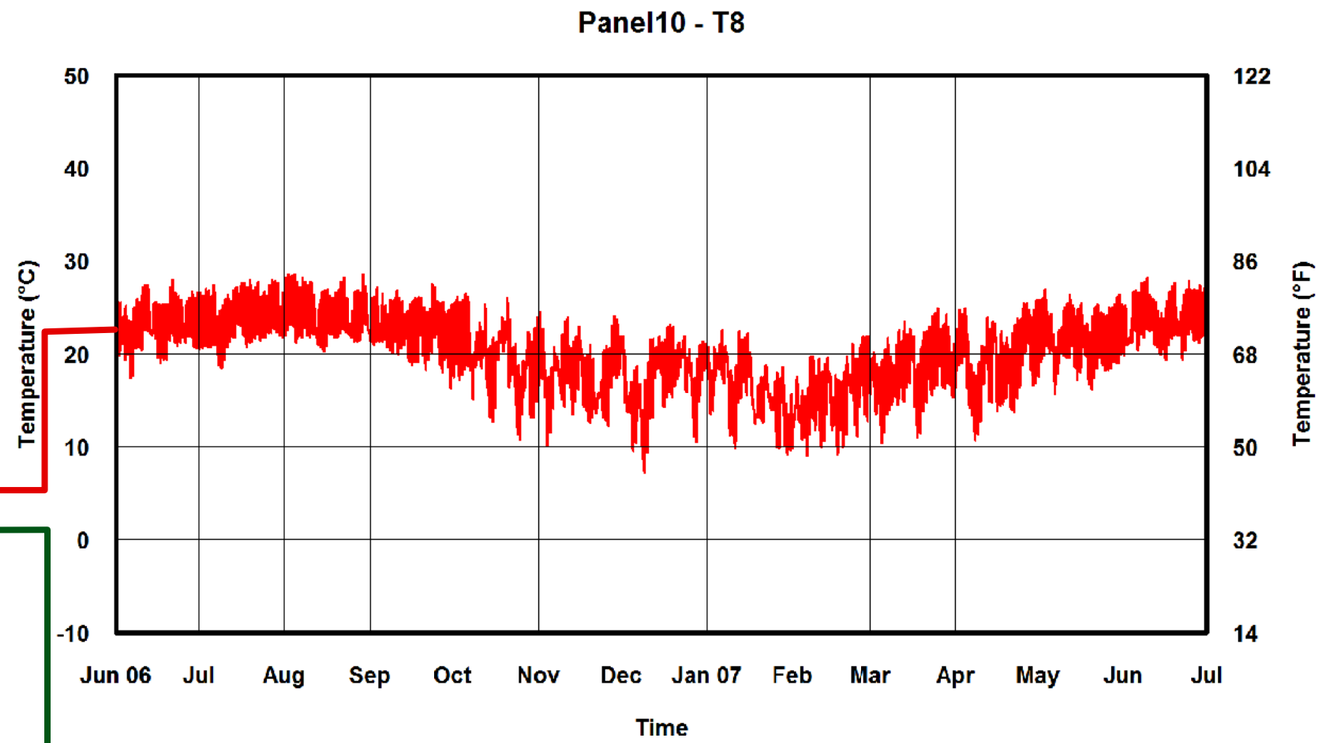
Panel10 - T8
Temperature (°C)
Temperature (°F)
50
40
30
20
10
0
-10
122
104
86
68
50
32
14
Jun 06
Jul
Aug
Sep
Oct
Nov
Dec
Jan 07
Feb
Mar
Apr
May
Jun
Jul
Time

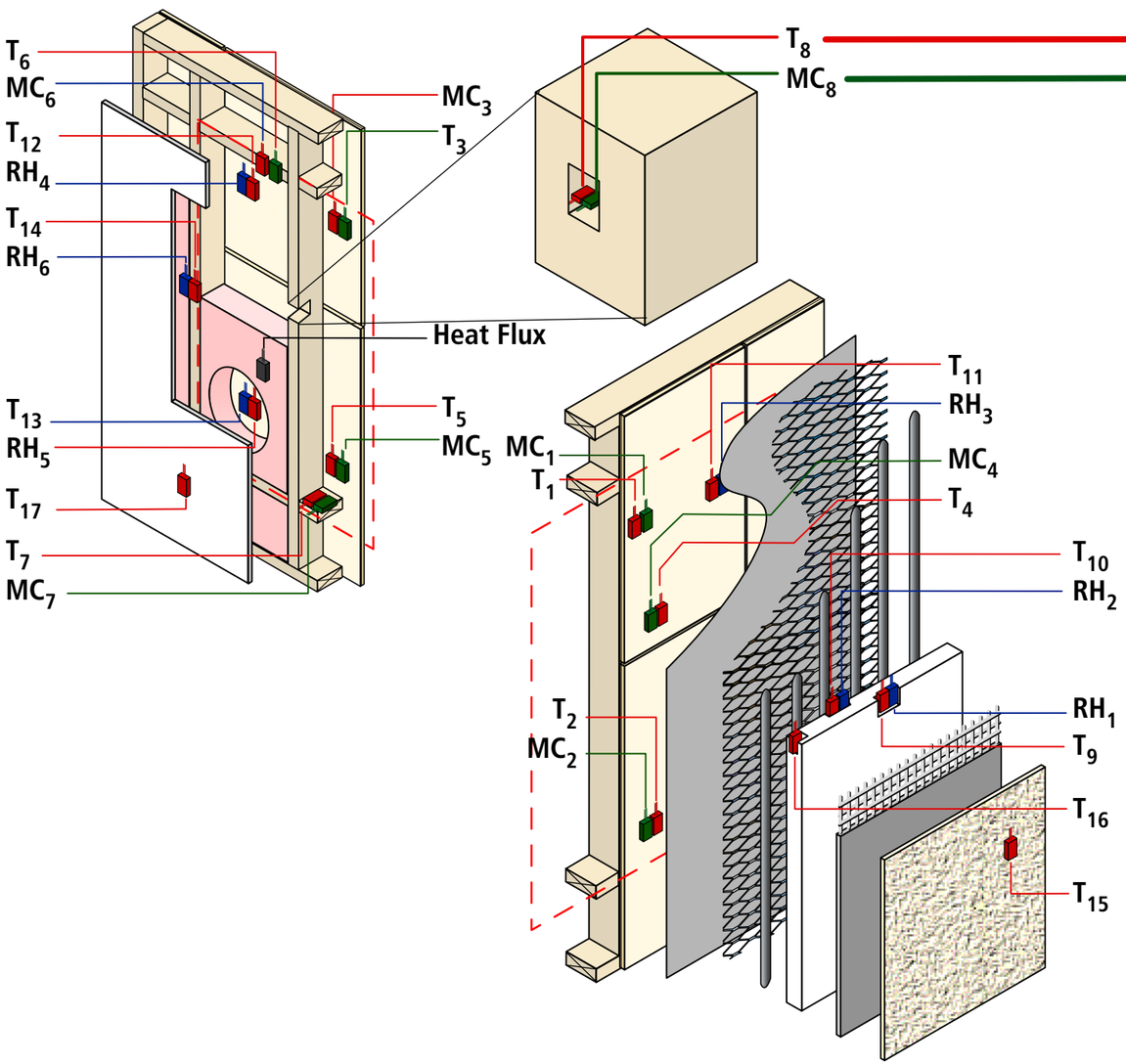
T6
MC6
T12
RH4
T14
RH6
T13
RH5
T17
T7
MC7
MC3
T3
Heat Flux
T5
MC5
T8
MC8
T11
RH3
MC1
T1
MC4
T4
T10
RH2
T2
MC2
RH1
T9
T16
T15

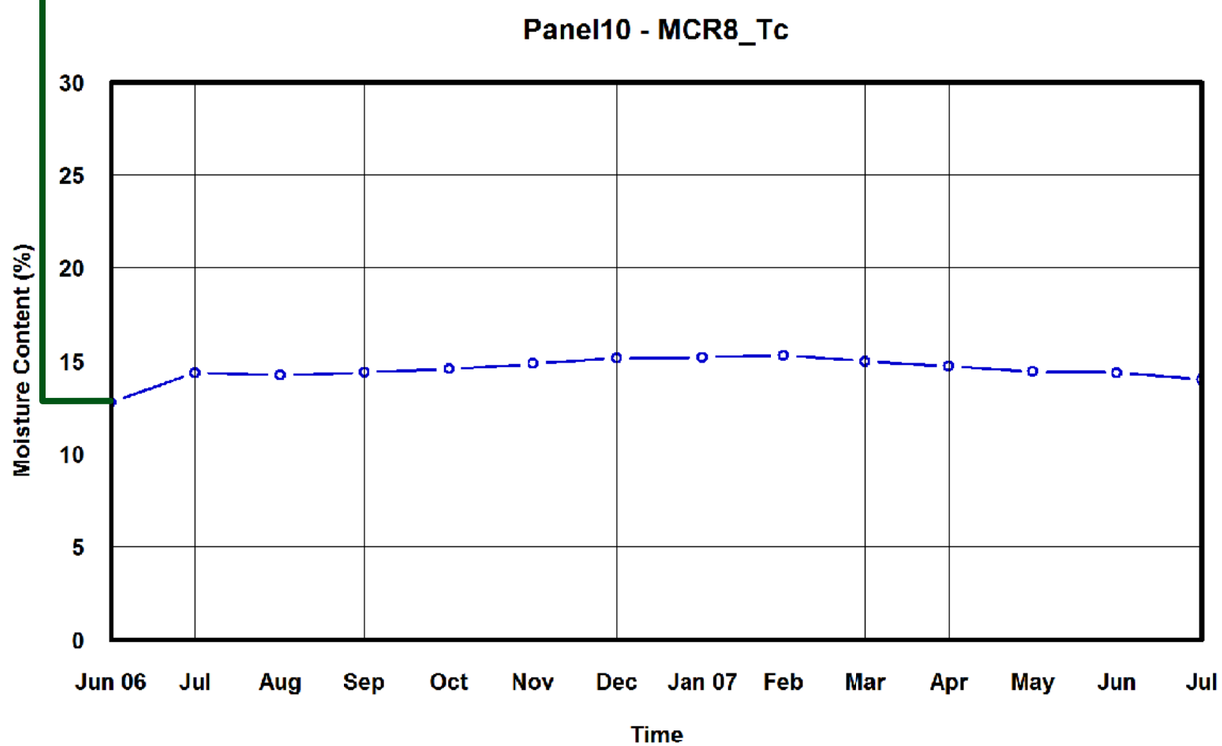
Panel10 - MCR8_Tc
Moisture Content (%)
30
25
20
15
10
5
0
Jun 06
Jul
Aug
Sep
Oct
Nov
Dec
Jan 07
Feb
Mar
Apr
May
Jun
Jul
Time

Panel 10

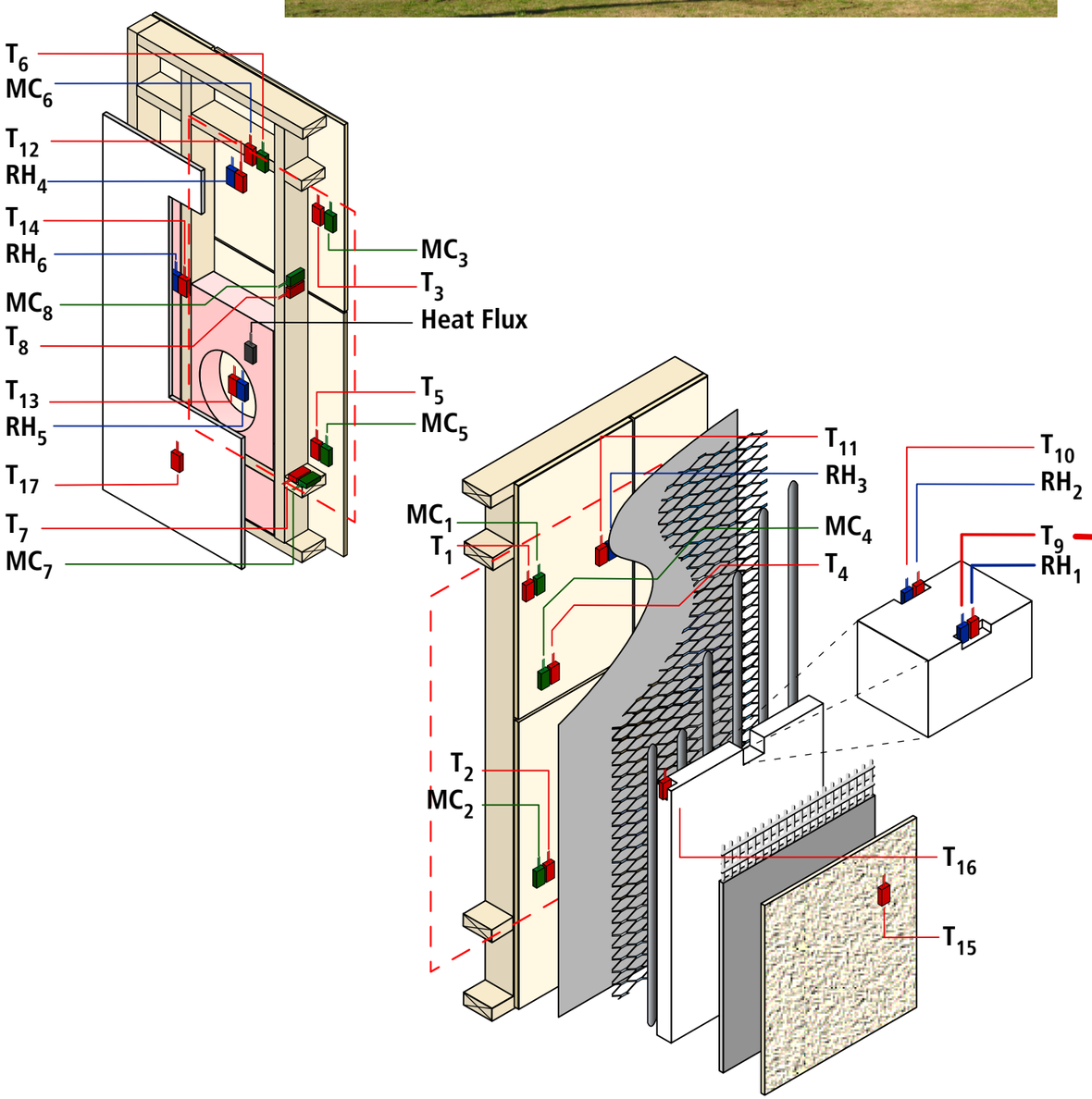
T_6
MC_6
T_{12}
RH_4
T_{14}
RH_6
MC_8
T_8
T_{13}
RH_5
T_{17}
T_7
MC_7
MC_3
T_3
Heat Flux
T_5
MC_5
T_{11}
RH_3
MC_1
T_1
MC_4
T_4
T_{10}
RH_2
T_9
RH_1
T_2
MC_2
T_{16}
T_{15}

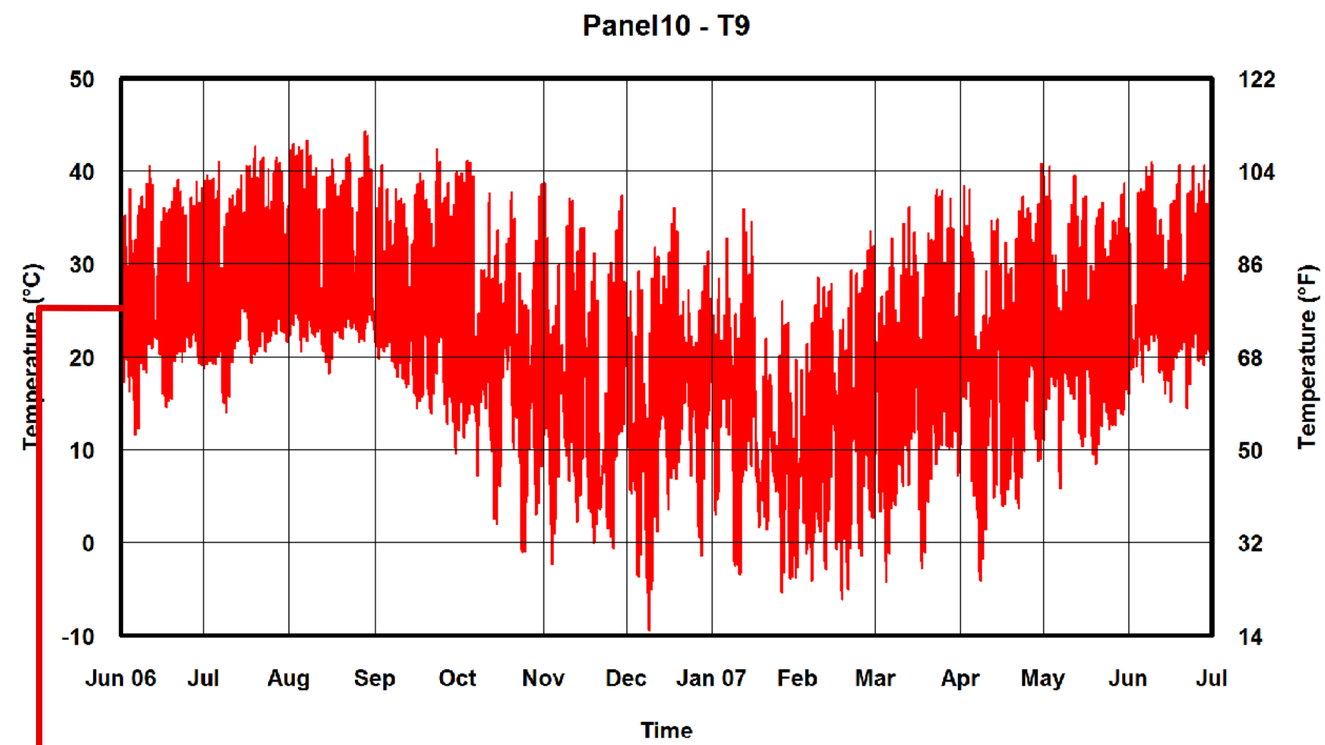
Panel10 - T9
Temperature (°C)
Temperature (°F)
50
40
30
20
10
0
-10
122
104
86
68
50
32
14
Jun 06
Jul
Aug
Sep
Oct
Nov
Dec
Jan 07
Feb
Mar
Apr
May
Jun
Jul
Time

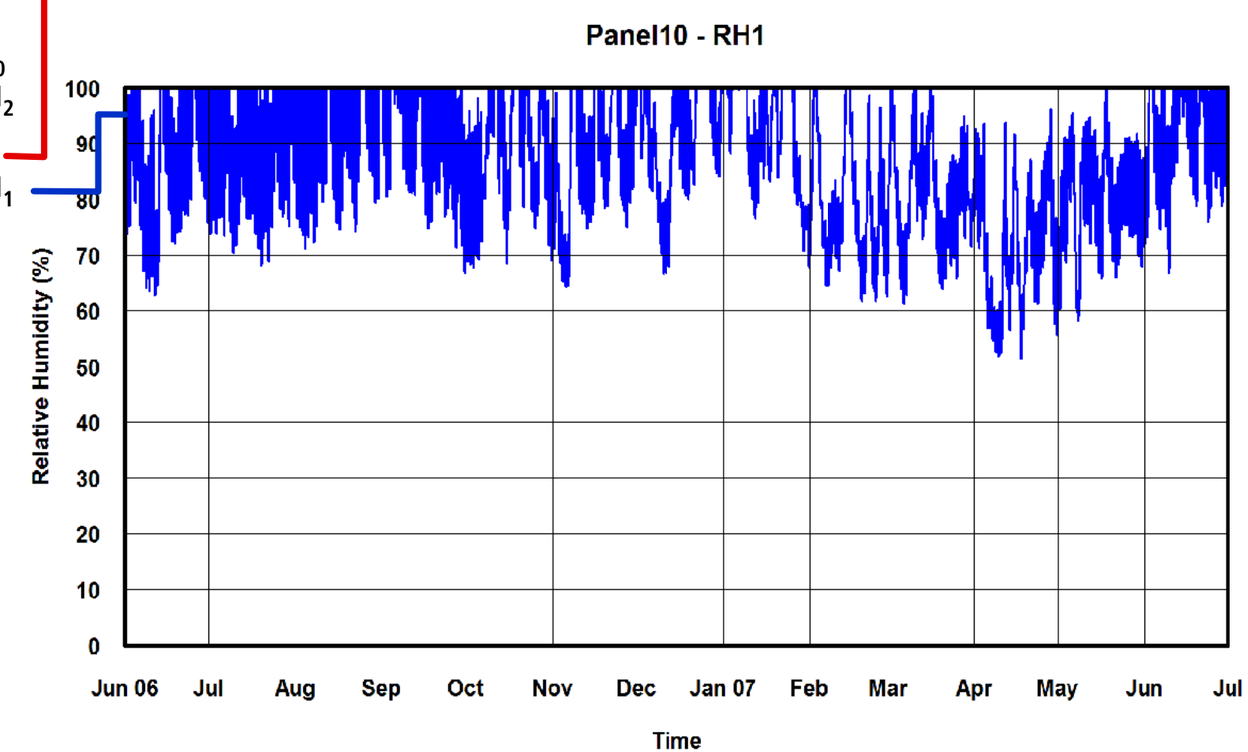
Panel10 - RH1
Relative Humidity (%)
100
90
80
70
60
50
40
30
20
10
0
Jun 06
Jul
Aug
Sep
Oct
Nov
Dec
Jan 07
Feb
Mar
Apr
May
Jun
Jul
Time

Panel 10

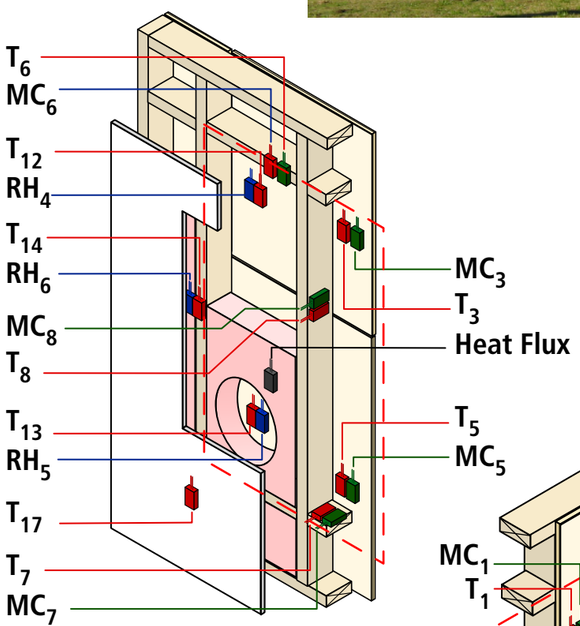
T_6
MC_6
T_{12}
RH_4
T_{14}
RH_6
MC_8
T_8
T_{13}
RH_5
T_{17}
T_7
MC_7
MC_3
T_3
Heat Flux
T_5
MC_5

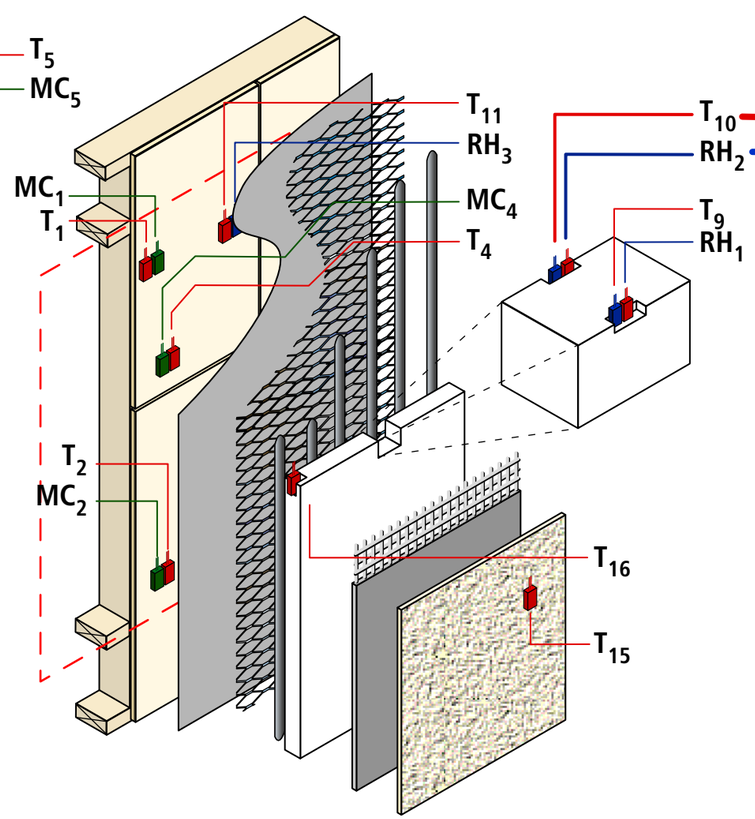
T_{11}
RH_3
MC_4
T_4
MC_1
T_1
T_2
MC_2
T_{16}
T_{15}
T_{10}
RH_2
T_9
RH_1

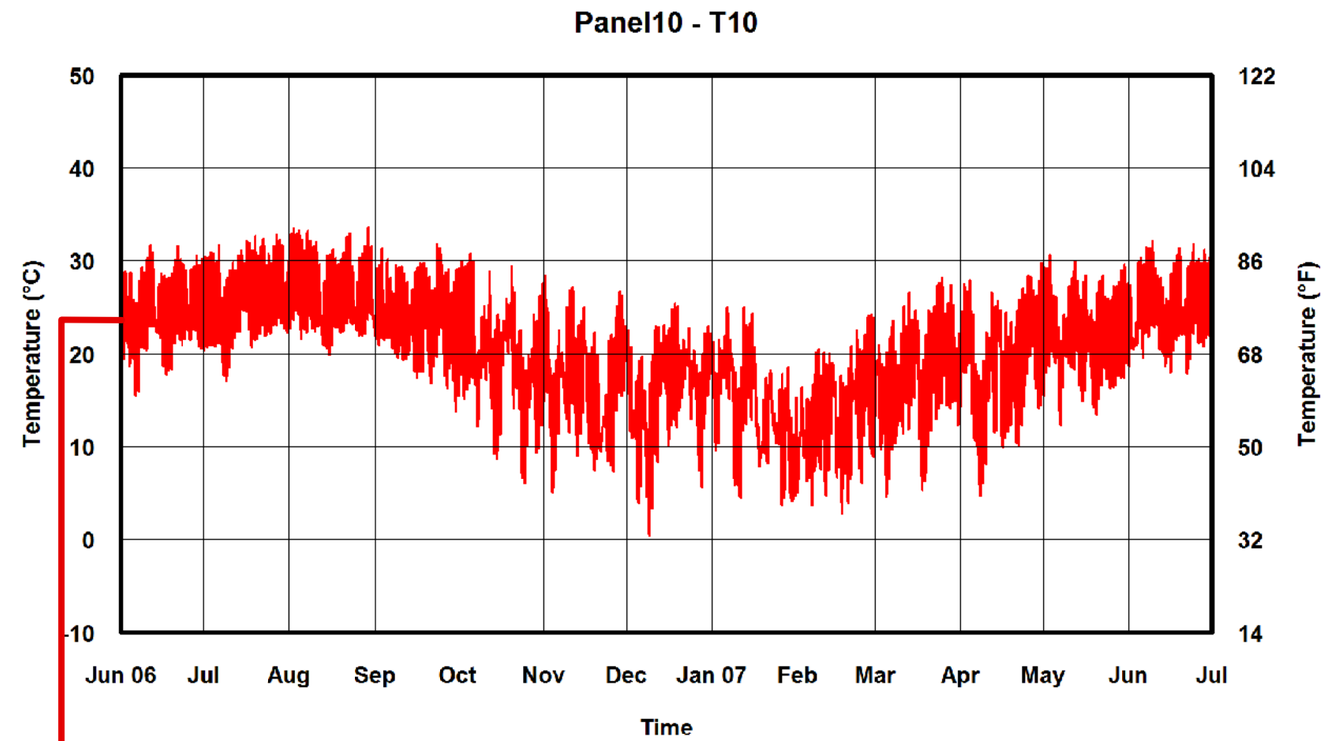
Panel10 - T10
Temperature (°C)
Temperature (°F)
50
40
30
20
10
0
-10
122
104
86
68
50
32
14
Jun 06
Jul
Aug
Sep
Oct
Nov
Dec
Jan 07
Feb
Mar
Apr
May
Jun
Jul
Time

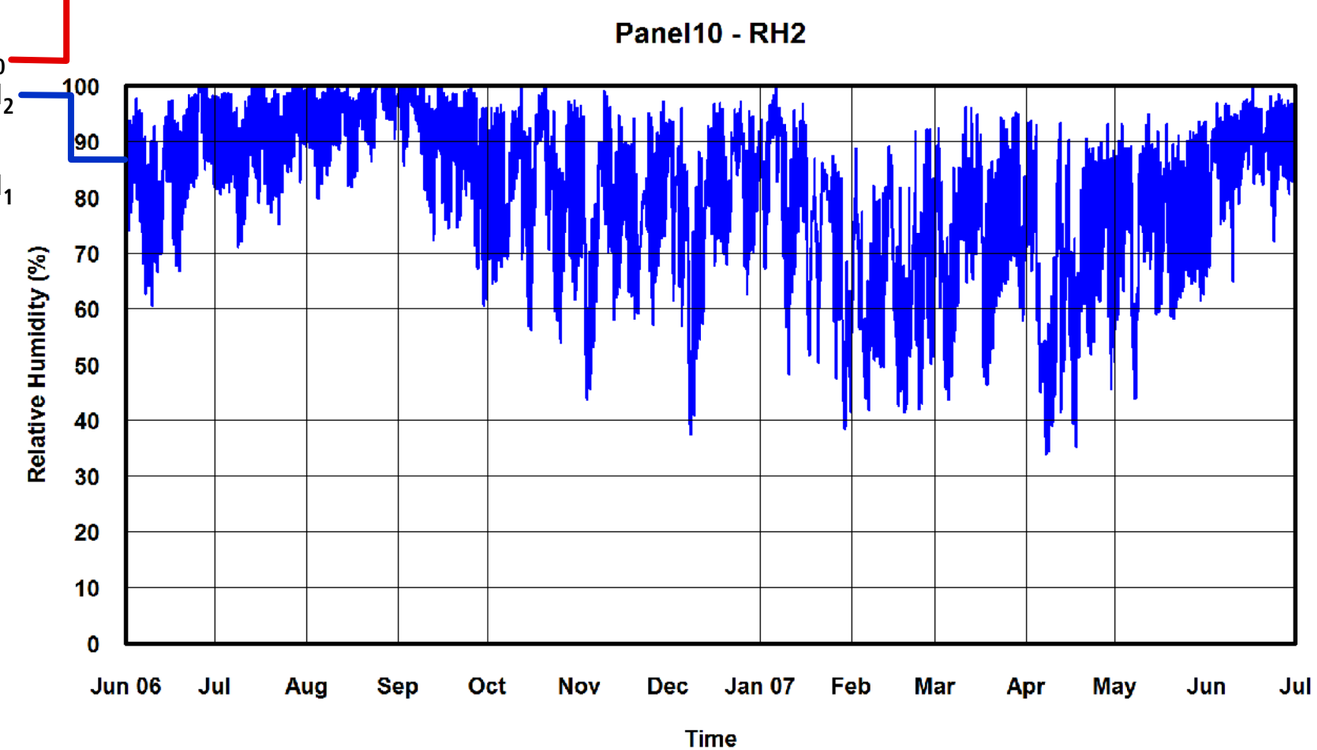
Panel10 - RH2
Relative Humidity (%)
100
90
80
70
60
50
40
30
20
10
0
Jun 06
Jul
Aug
Sep
Oct
Nov
Dec
Jan 07
Feb
Mar
Apr
May
Jun
Jul
Time

Panel 10

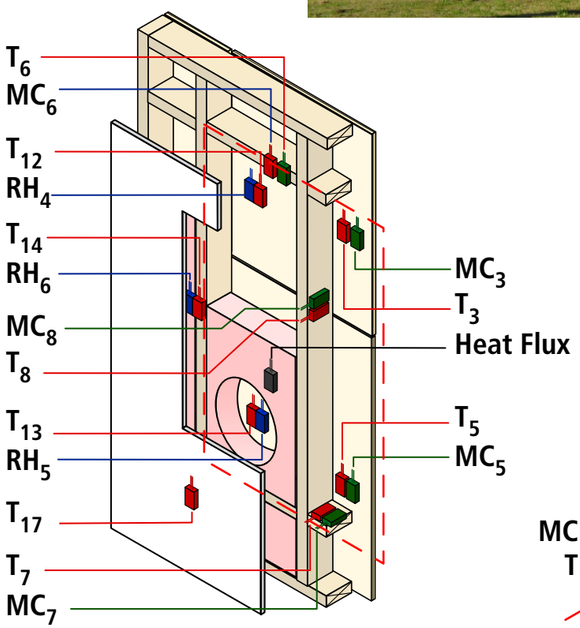
T_6
MC_6
T_{12}
RH_4
T_{14}
RH_6
MC_8
T_8
T_{13}
RH_5
T_{17}
T_7
MC_7
MC_3
T_3
Heat Flux
T_5
MC_5

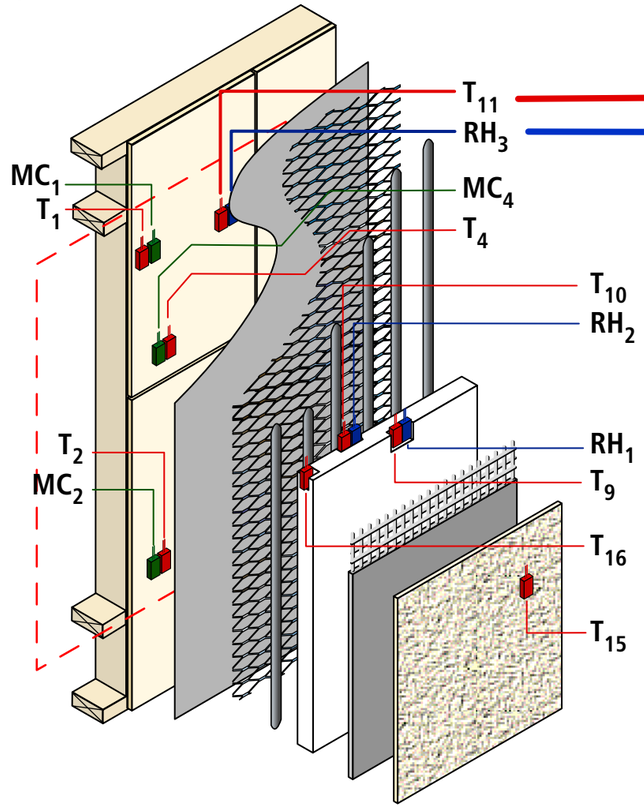
T_{11}
RH_3
MC_1
T_1
MC_4
T_4
T_{10}
RH_2
T_2
MC_2
RH_1
T_9
T_{16}
T_{15}

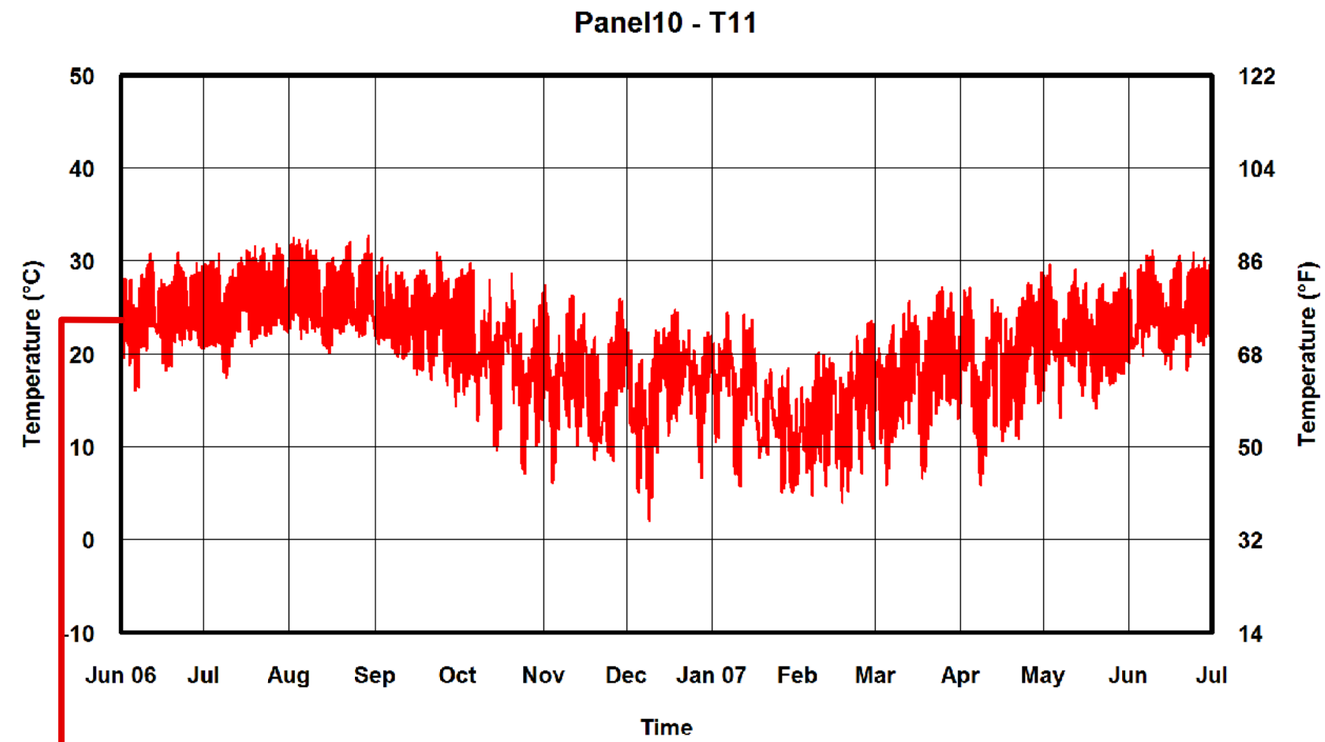
Panel10 - T11
Temperature (°C)
Temperature (°F)
50
40
30
20
10
0
-10
122
104
86
68
50
32
14
Jun 06
Jul
Aug
Sep
Oct
Nov
Dec
Jan 07
Feb
Mar
Apr
May
Jun
Jul
Time

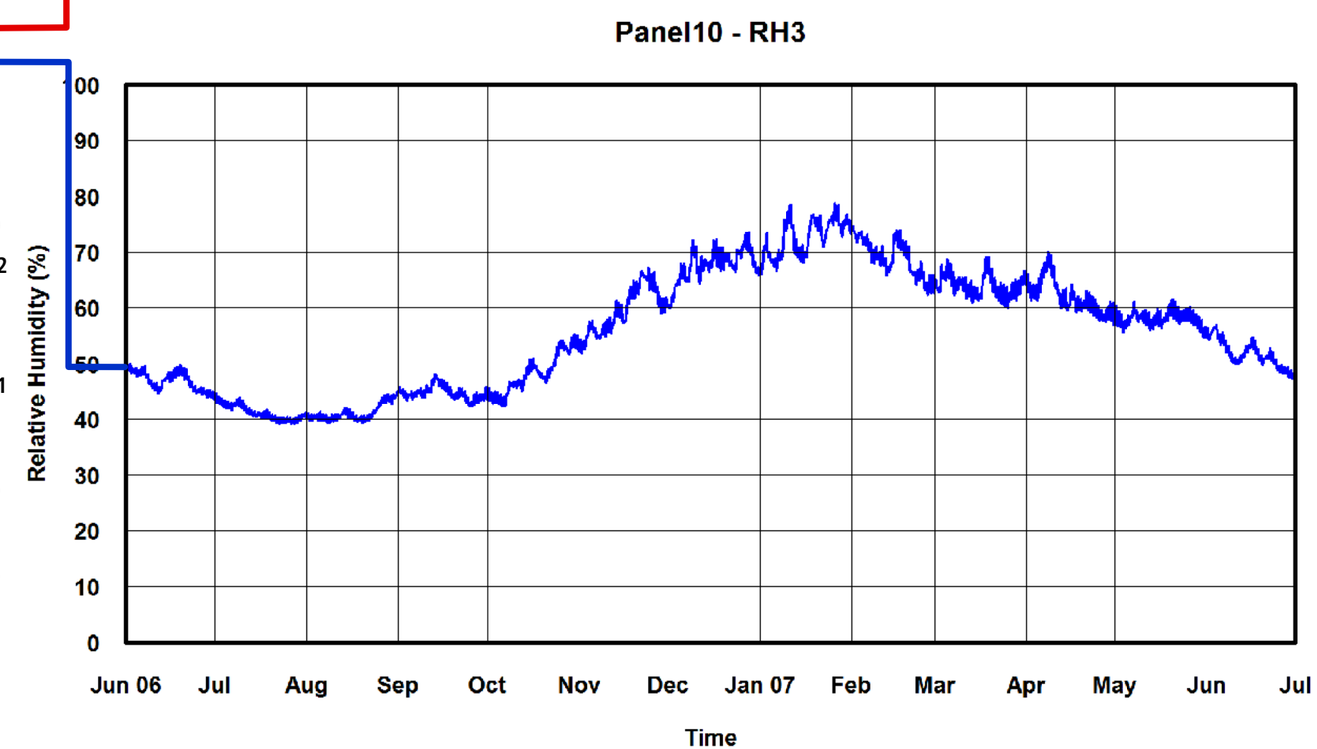
Panel10 - RH3
Relative Humidity (%)
100
90
80
70
60
50
40
30
20
10
0
Jun 06
Jul
Aug
Sep
Oct
Nov
Dec
Jan 07
Feb
Mar
Apr
May
Jun
Jul
Time

Panel 10

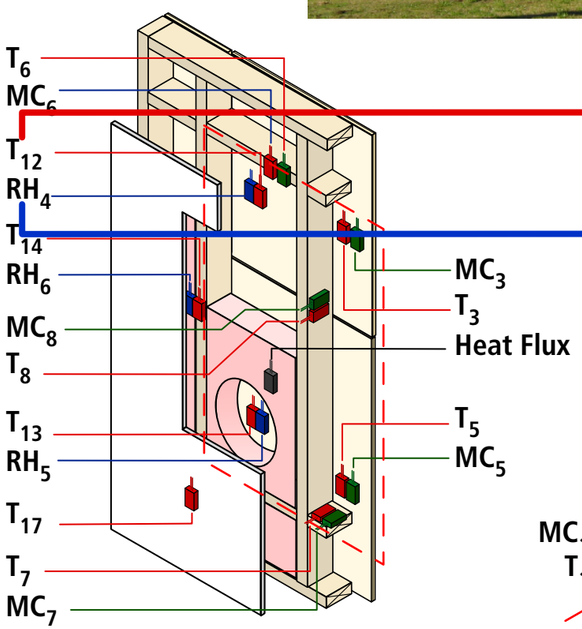
T_6
MC_6
T_{12}
RH_4
T_{14}
RH_6
MC_8
T_8
T_{13}
RH_5
T_{17}
T_7
MC_7
MC_3
T_3
Heat Flux
T_5
MC_5

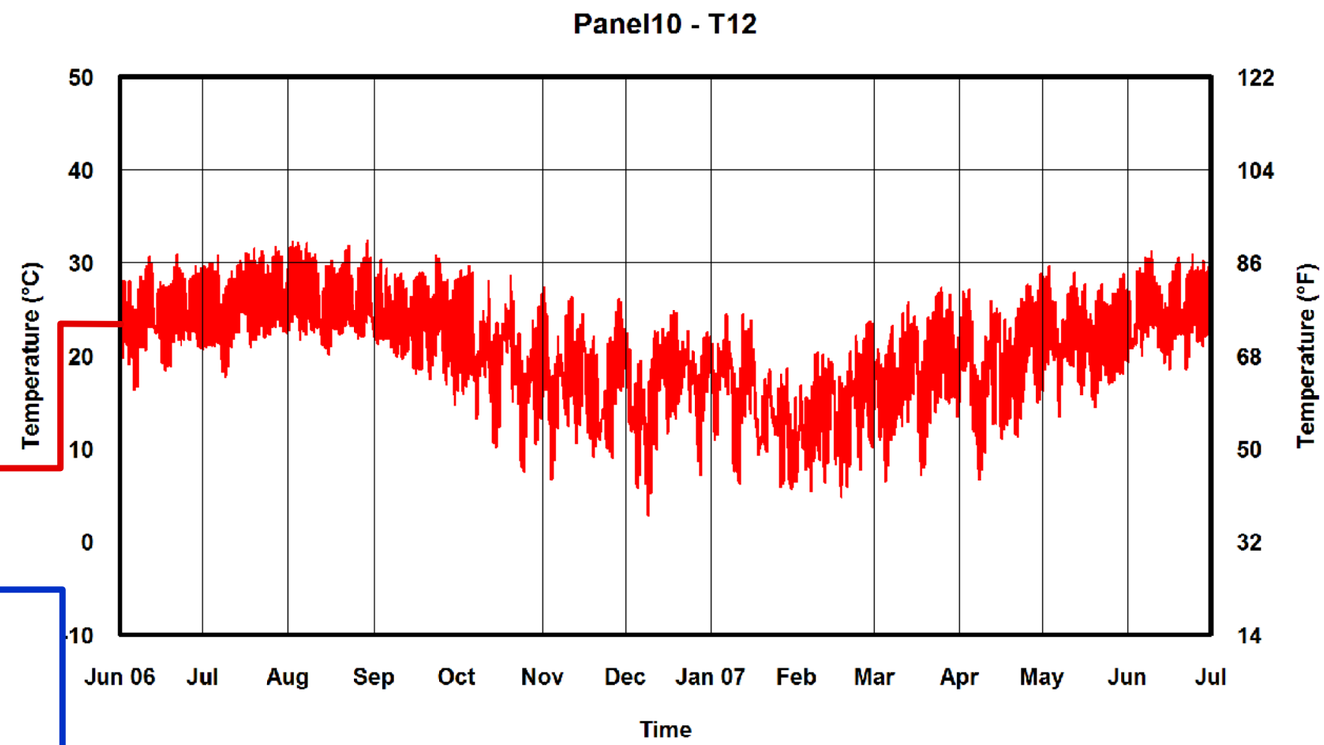
Panel10 - T12
Temperature (°C)
Temperature (°F)
50
40
30
20
10
0
-10
122
104
86
68
50
32
14
Jun 06
Jul
Aug
Sep
Oct
Nov
Dec
Jan 07
Feb
Mar
Apr
May
Jun
Jul
Time

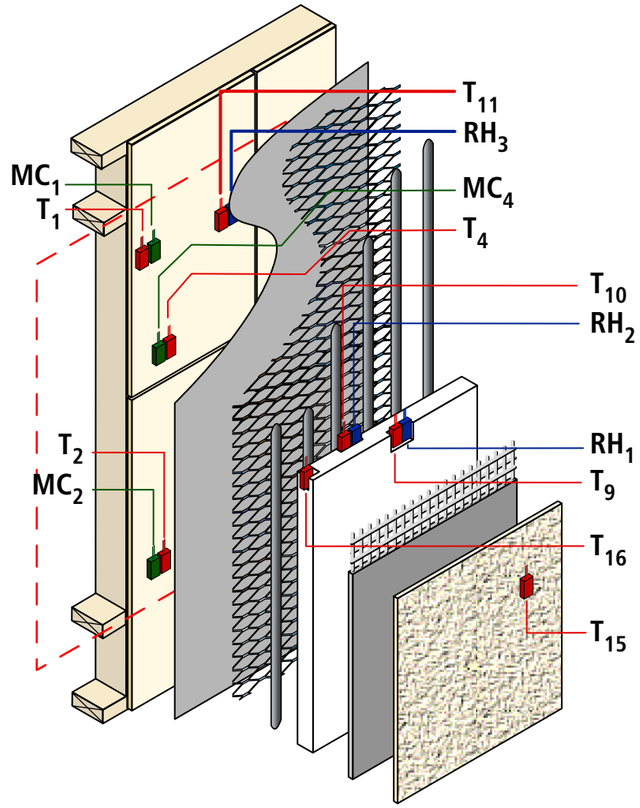
T_{11}
RH_3
MC_4
T_4
T_{10}
RH_2
RH_1
T_9
T_{16}
T_{15}
MC_1
T_1
T_2
MC_2

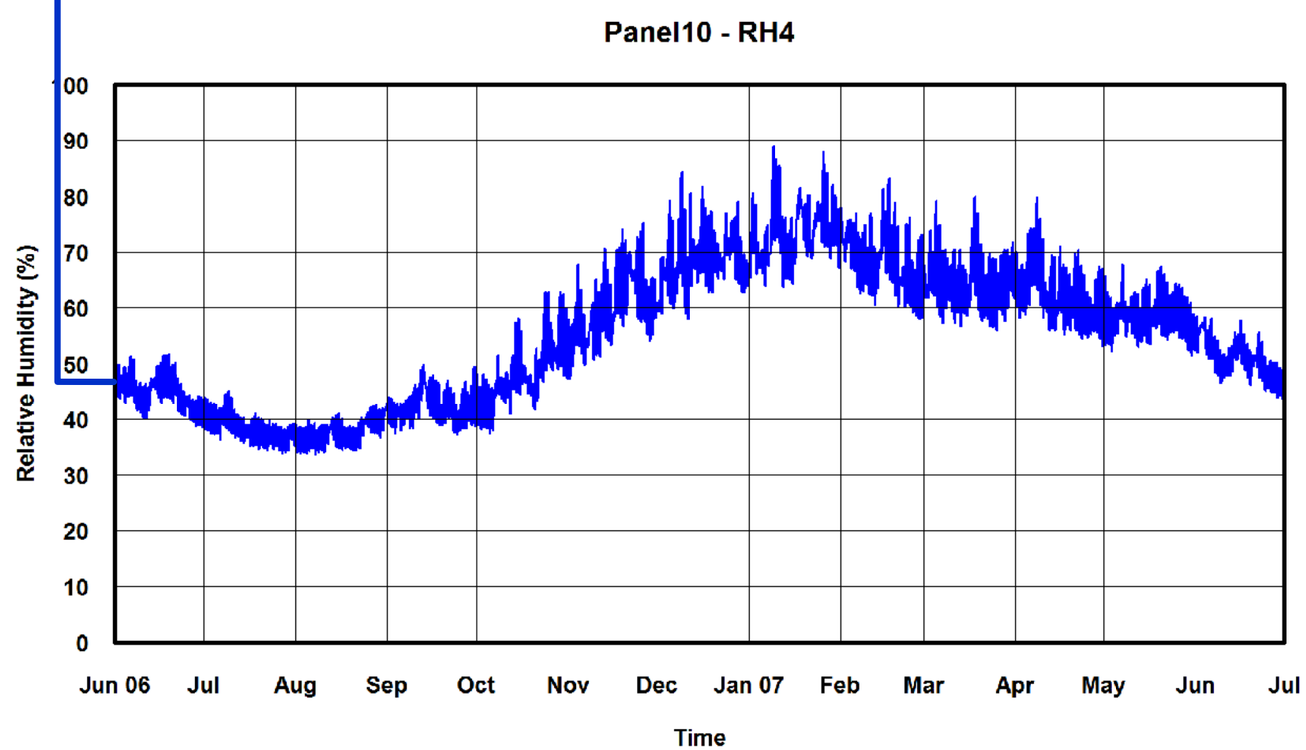
Panel10 - RH4
Relative Humidity (%)
100
90
80
70
60
50
40
30
20
10
0
Jun 06
Jul
Aug
Sep
Oct
Nov
Dec
Jan 07
Feb
Mar
Apr
May
Jun
Jul
Time

Panel 10

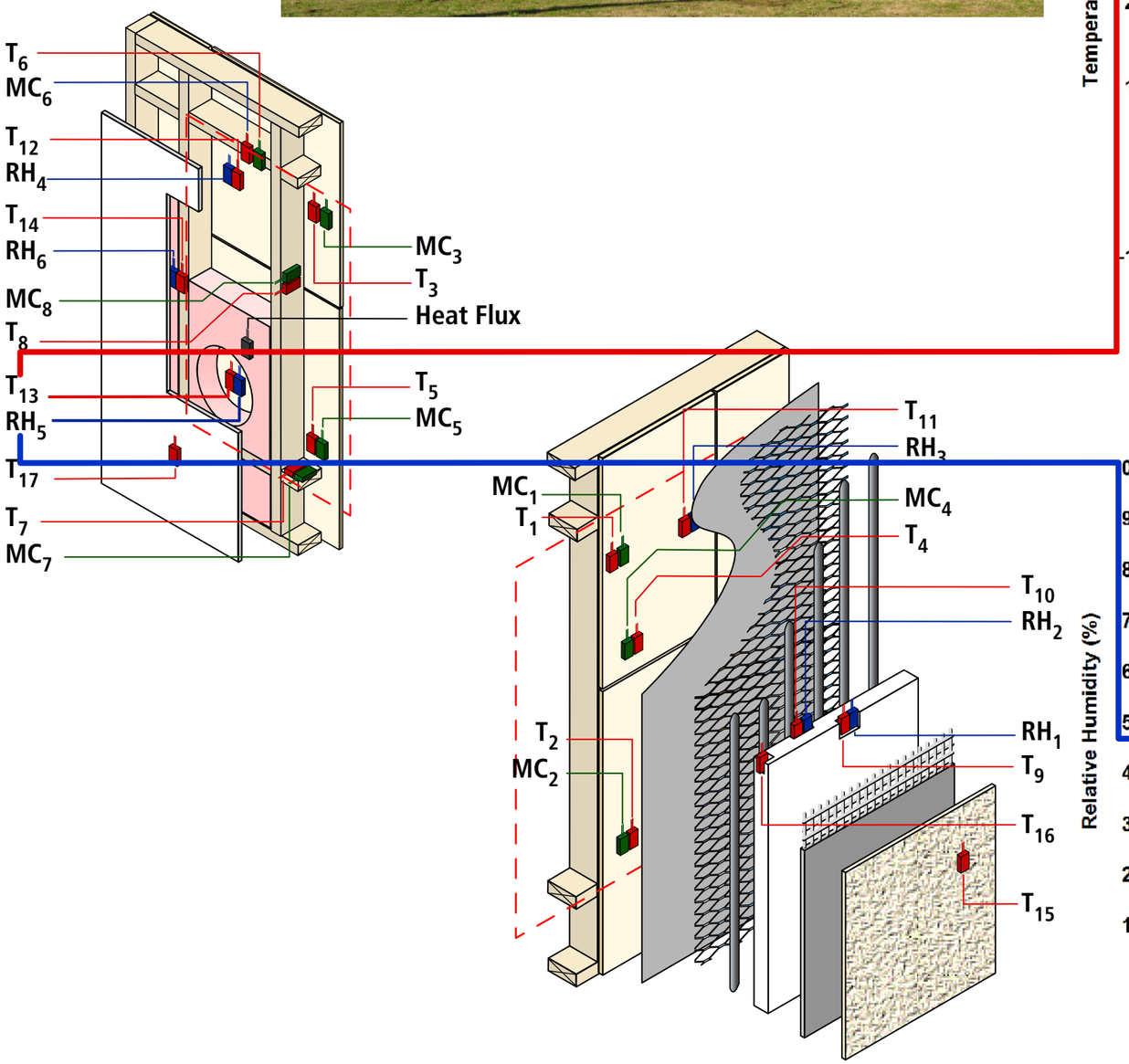
T_6
MC_6
T_{12}
RH_4
T_{14}
RH_6
MC_8
T_8
T_{13}
RH_5
T_{17}
T_7
MC_7
MC_3
T_3
Heat Flux
T_5
MC_5
MC_1
T_1
T_2
MC_2
T_{11}
RH_3
MC_4
T_4
T_{10}
RH_2
RH_1
T_9
T_{16}
T_{15}

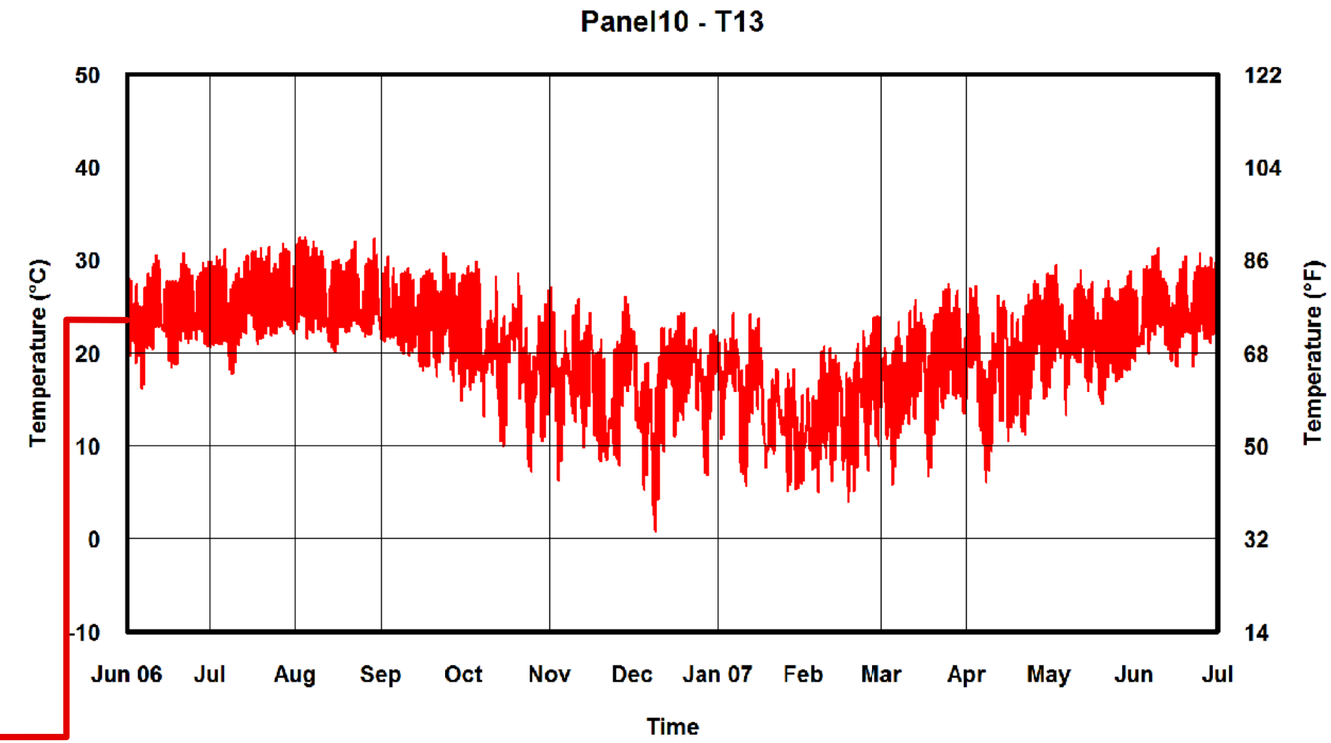
Panel10 - T13
Temperature (°C)
Temperature (°F)
50
40
30
20
10
0
-10
122
104
86
68
50
32
14
Jun 06
Jul
Aug
Sep
Oct
Nov
Dec
Jan 07
Feb
Mar
Apr
May
Jun
Jul
Time

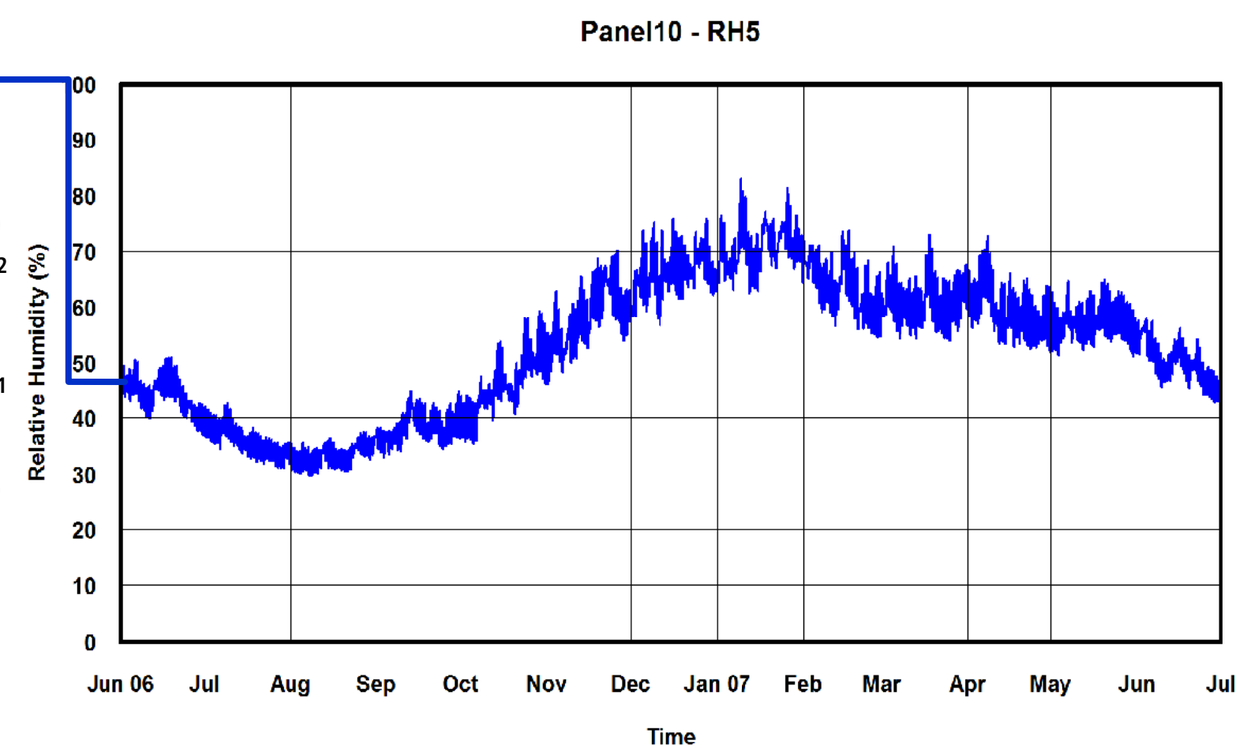
Panel10 - RH5
Relative Humidity (%)
100
90
80
70
60
50
40
30
20
10
0
Jun 06
Jul
Aug
Sep
Oct
Nov
Dec
Jan 07
Feb
Mar
Apr
May
Jun
Jul
Time

Panel 10

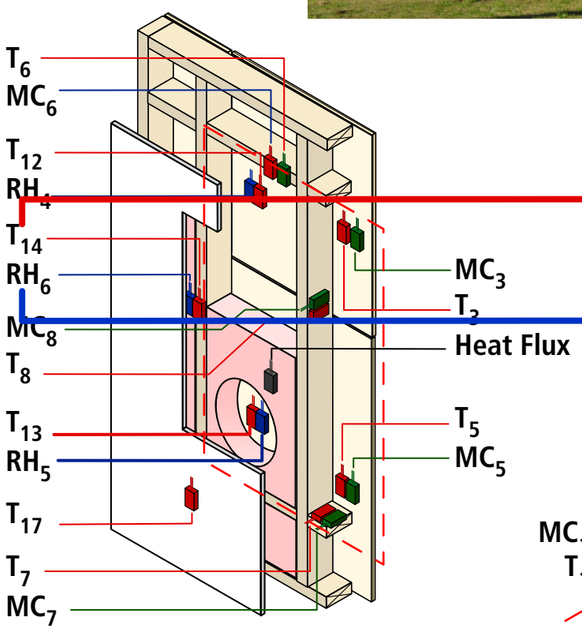
T_6
MC_6
T_{12}
RH_4
T_{14}
RH_6
MC_8
T_8
T_{13}
RH_5
T_{17}
T_7
MC_7
MC_3
T_3
Heat Flux
T_5
MC_5

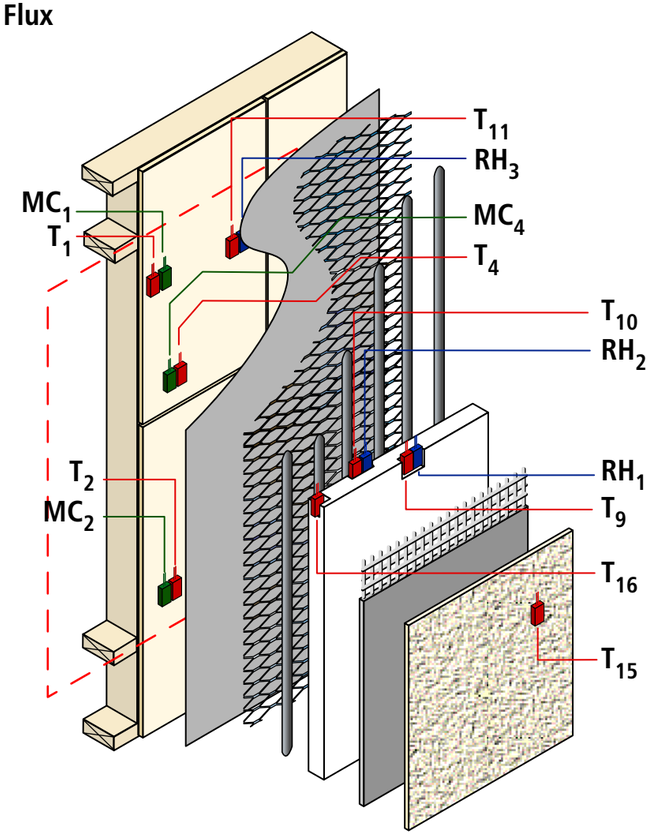
T_{11}
RH_3
MC_4
T_4
T_{10}
RH_2
RH_1
T_9
T_{16}
T_{15}
MC_1
T_1
T_2
MC_2

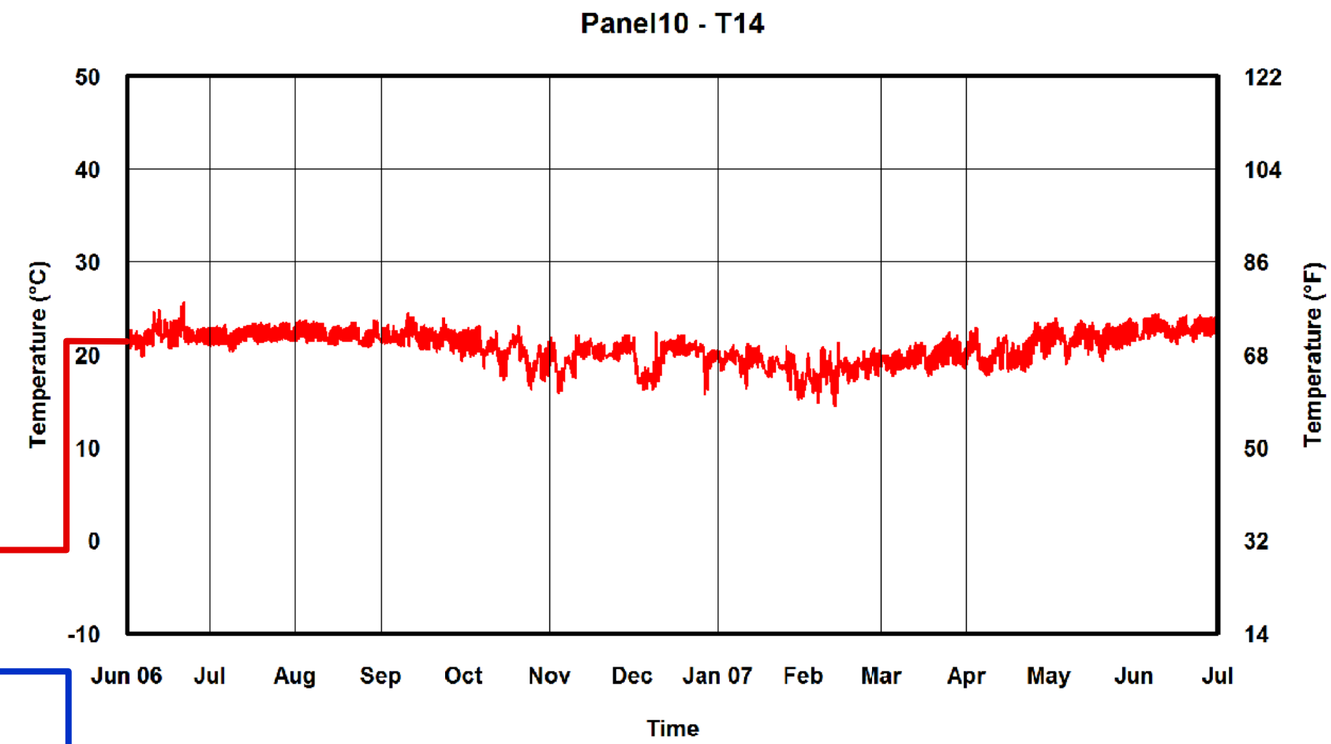
Panel10 - T14
Temperature (°C)
Temperature (°F)
50
40
30
20
10
0
-10
122
104
86
68
50
32
14
Jun 06
Jul
Aug
Sep
Oct
Nov
Dec
Jan 07
Feb
Mar
Apr
May
Jun
Jul
Time

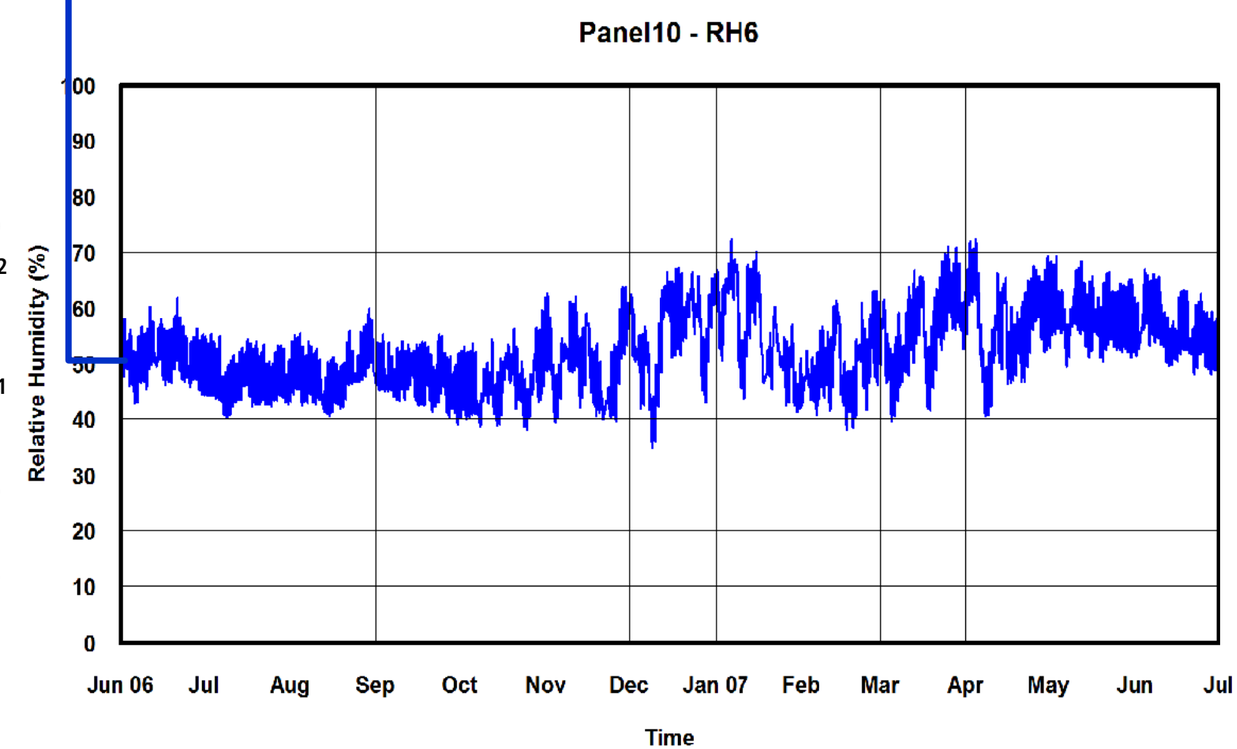
Panel10 - RH6
Relative Humidity (%)
100
90
80
70
60
50
40
30
20
10
0
Jun 06
Jul
Aug
Sep
Oct
Nov
Dec
Jan 07
Feb
Mar
Apr
May
Jun
Jul
Time

Panel 10

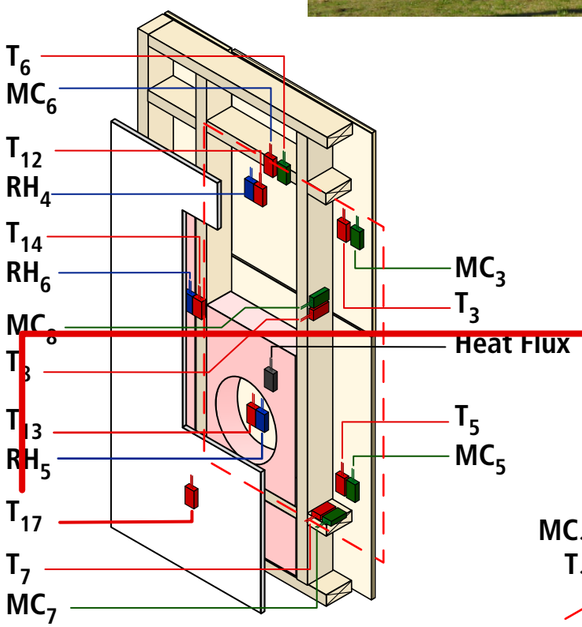
T_6
MC_6
T_{12}
RH_4
T_{14}
RH_6
MC_8
T_8
T_{13}
RH_5
T_{17}
T_7
MC_7
MC_3
T_3
Heat Flux
T_5
MC_5

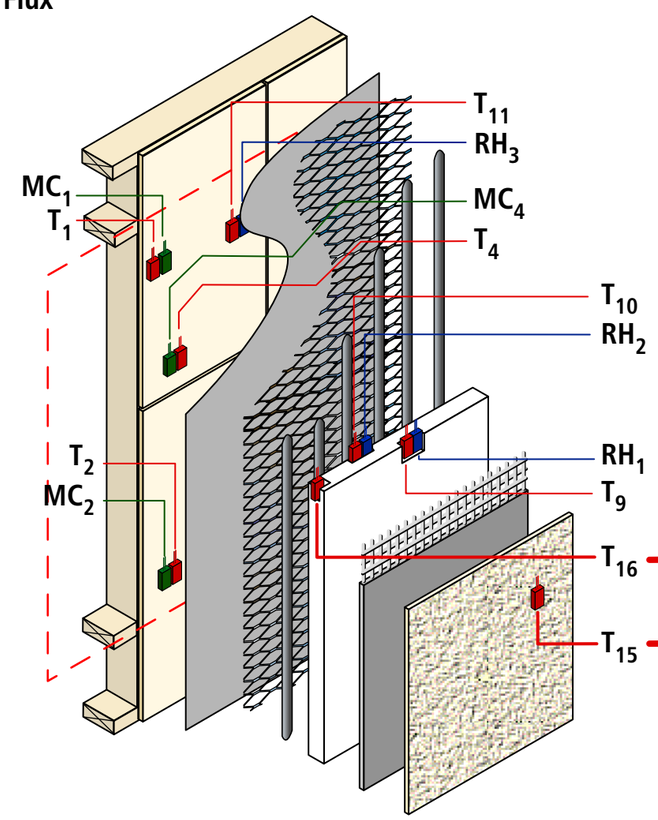
T_{11}
RH_3
MC_1
T_1
MC_4
T_4
T_{10}
RH_2
T_2
MC_2
RH_1
T_9
T_{16}
T_{15}

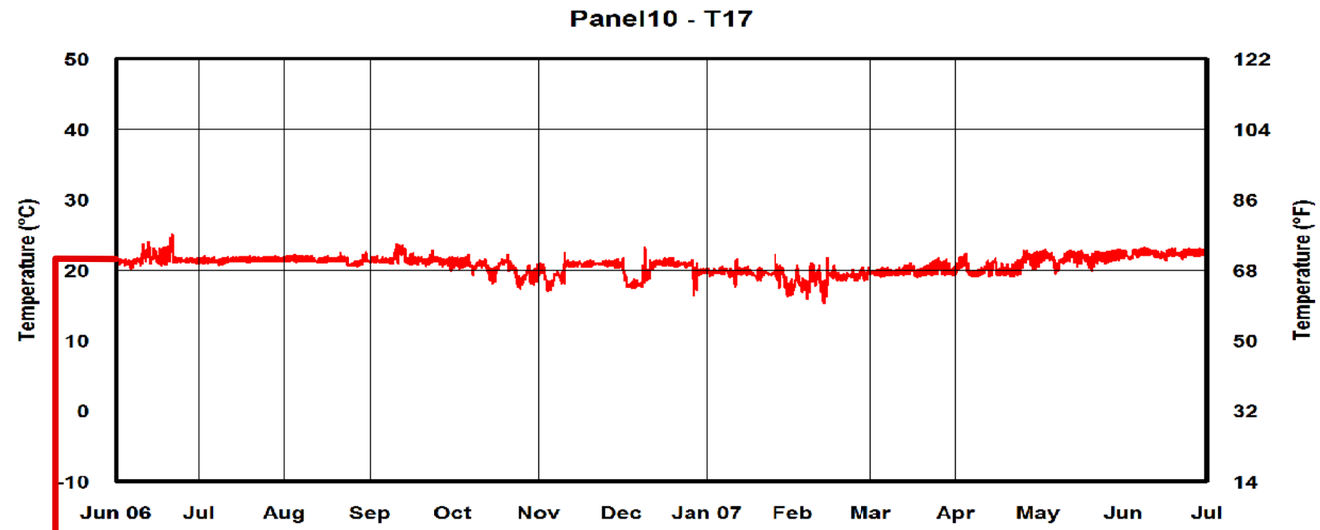
Panel10 - T17
Temperature (°C)
Temperature (°F)
50
40
30
20
10
0
-10
122
104
86
68
50
32
14
Jun 06
Jul
Aug
Sep
Oct
Nov
Dec
Jan 07
Feb
Mar
Apr
May
Jun
Jul

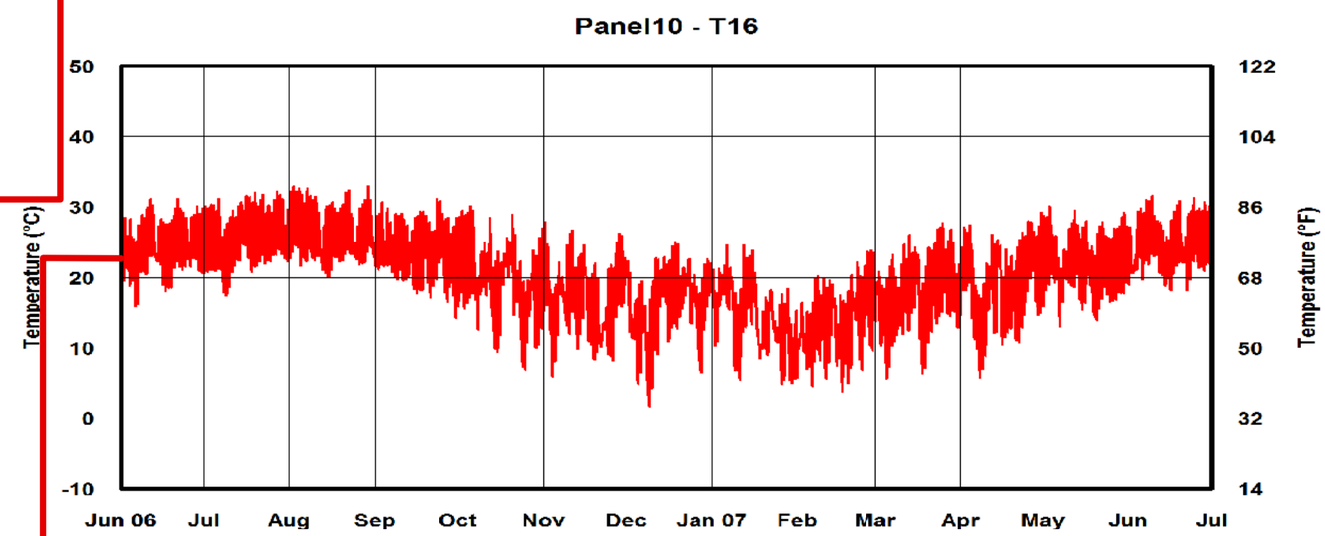
Panel10 - T16
Temperature (°C)
Temperature (°F)
50
40
30
20
10
0
-10
122
104
86
68
50
32
14
Jun 06
Jul
Aug
Sep
Oct
Nov
Dec
Jan 07
Feb
Mar
Apr
May
Jun
Jul

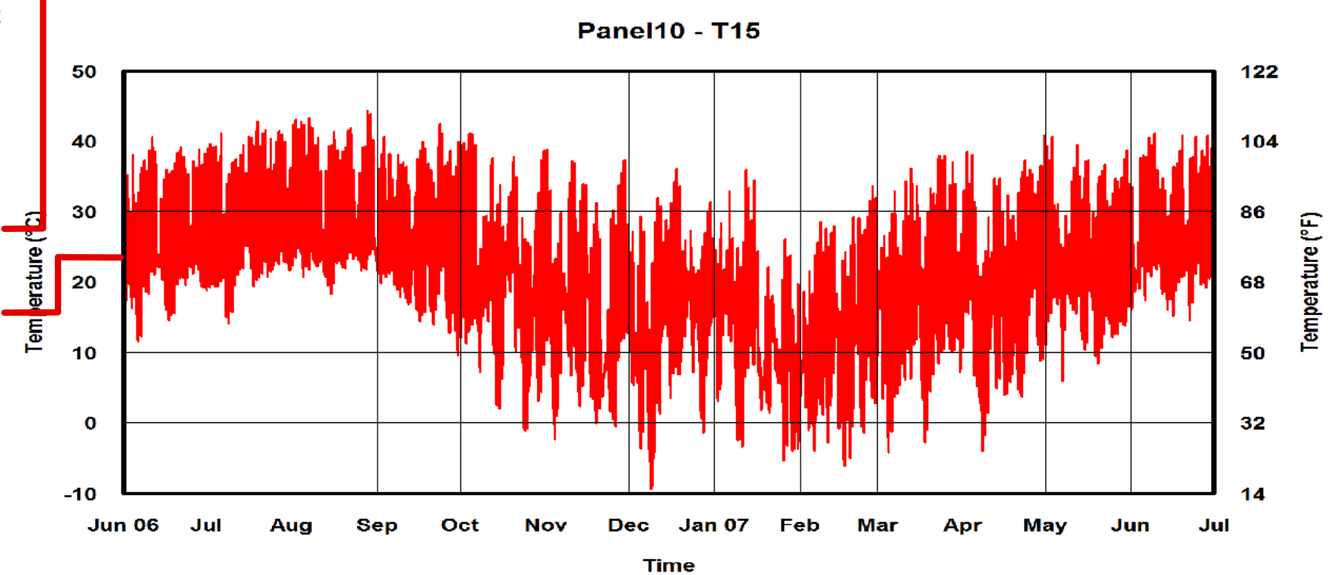
Panel10 - T15
Temperature (°C)
Temperature (°F)
50
40
30
20
10
0
-10
122
104
86
68
50
32
14
Jun 06
Jul
Aug
Sep
Oct
Nov
Dec
Jan 07
Feb
Mar
Apr
May
Jun
Jul
Time

Panel 10

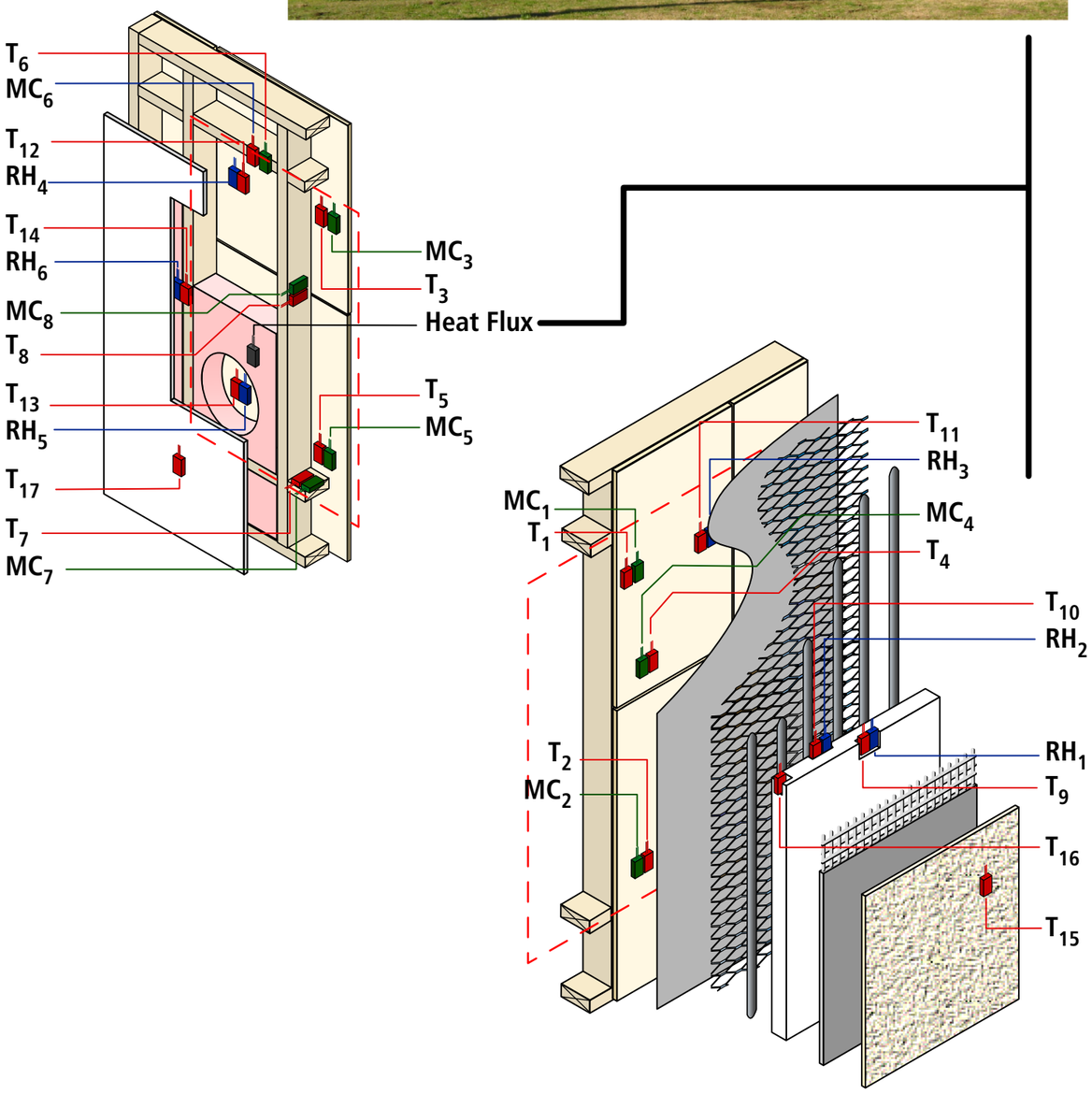
T_6
MC_6
T_{12}
RH_4
T_{14}
RH_6
MC_8
T_8
T_{13}
RH_5
T_{17}
T_7
MC_7
MC_3
T_3
Heat Flux
T_5
MC_5
T_{11}
RH_3
MC_1
T_1
MC_4
T_4
T_{10}
RH_2
T_2
MC_2
RH_1
T_9
T_{16}
T_{15}

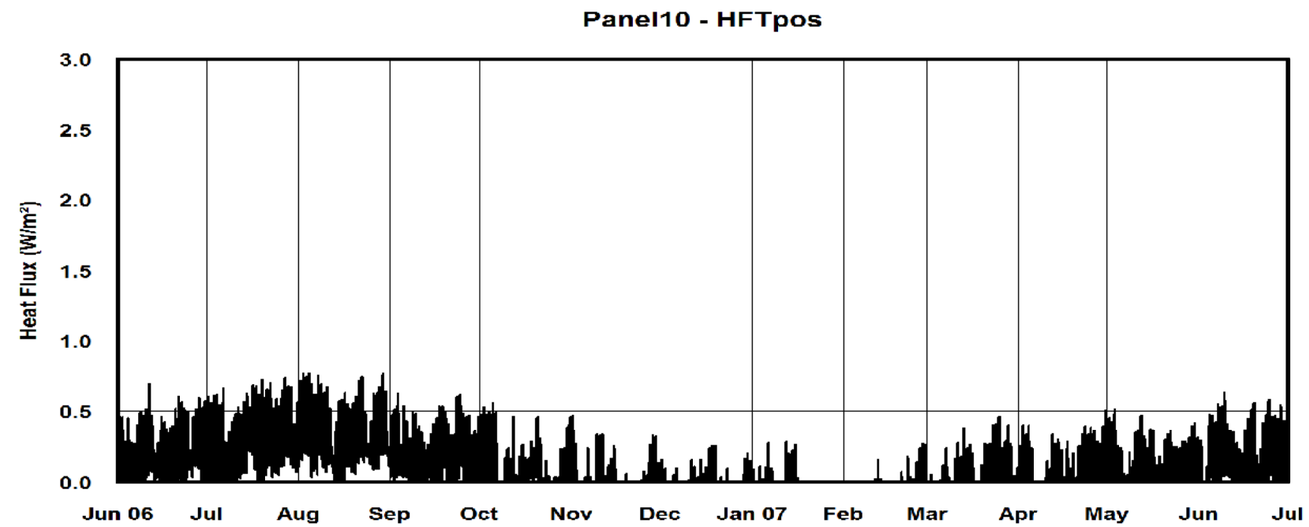
Panel10 - HFTpos
Heat Flux (W/m²)
3.0
2.5
2.0
1.5
1.0
0.5
0.0
Jun 06
Jul
Aug
Sep
Oct
Nov
Dec
Jan 07
Feb
Mar
Apr
May
Jun
Jul

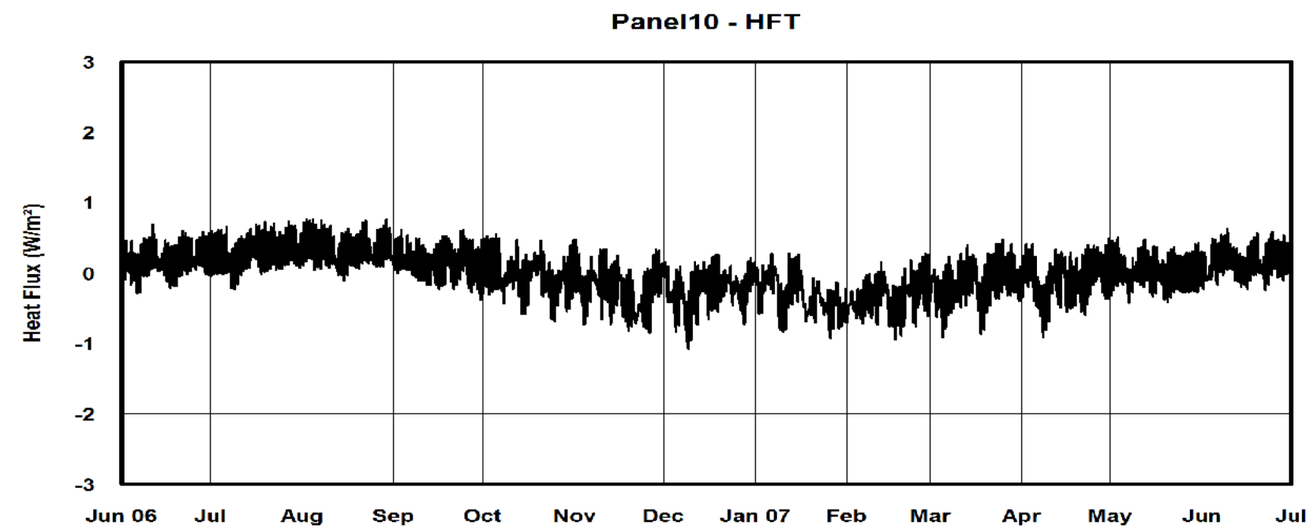
Panel10 - HFT
Heat Flux (W/m²)
3
2
1
0
-1
-2
-3
Jun 06
Jul
Aug
Sep
Oct
Nov
Dec
Jan 07
Feb
Mar
Apr
May
Jun
Jul

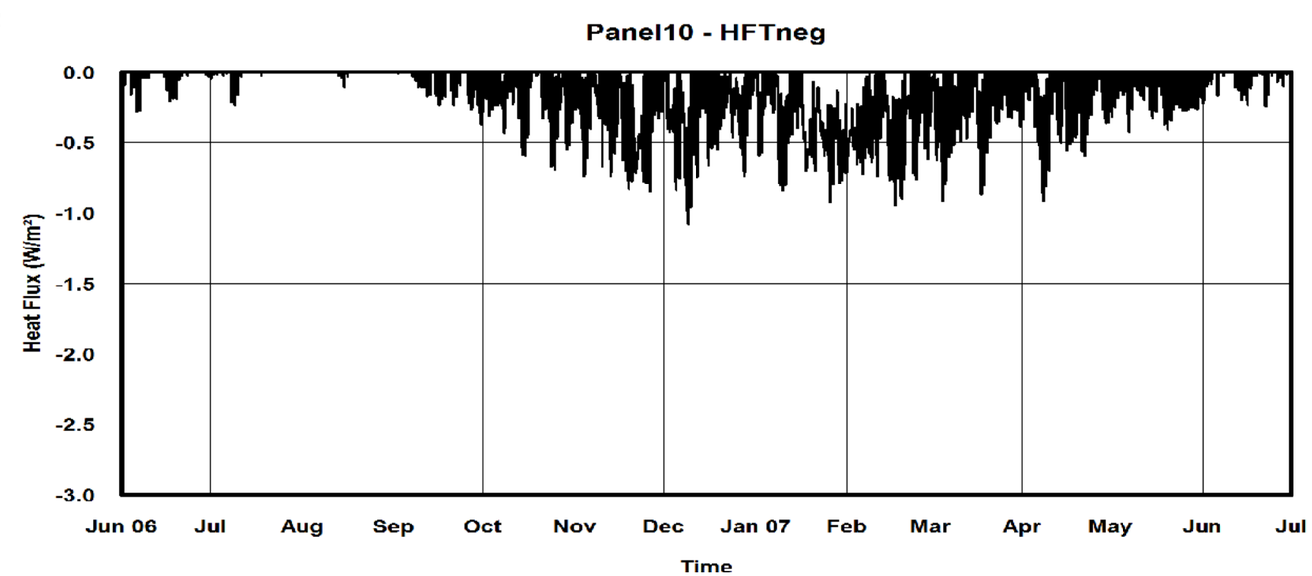
Panel10 - HFTneg
Heat Flux (W/m²)
0.0
-0.5
-1.0
-1.5
-2.0
-2.5
-3.0
Jun 06
Jul
Aug
Sep
Oct
Nov
Dec
Jan 07
Feb
Mar
Apr
May
Jun
Jul
Time

Panel 12

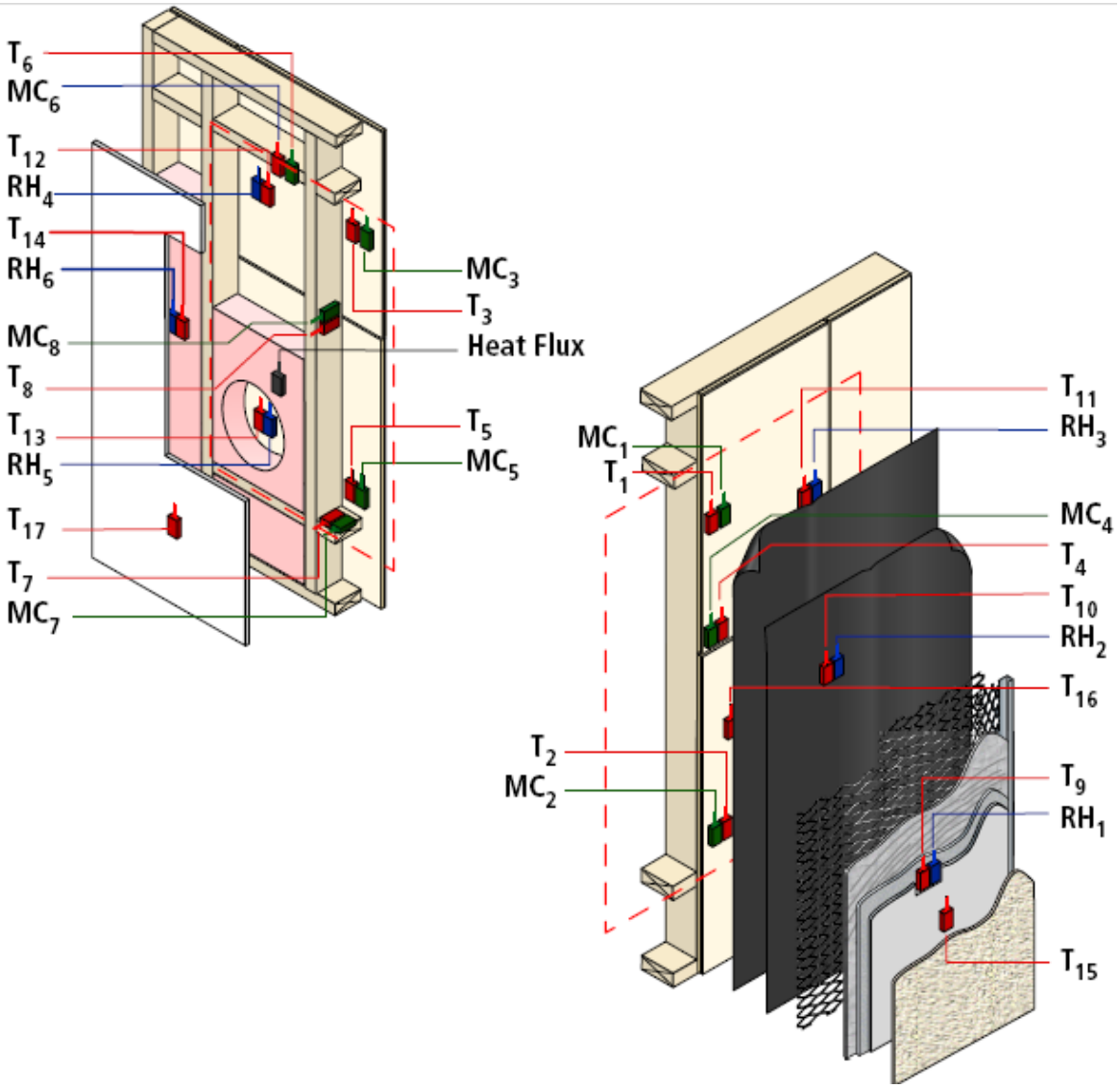
T_6
MC_6
T_{12}
RH_4
T_{14}
RH_6
MC_8
T_8
T_{13}
RH_5
T_{17}
T_7
MC_7
MC_3
T_3
Heat Flux
T_5
MC_5
MC_1
T_1
T_2
MC_2
T_{11}
RH_3
MC_4
T_4
T_{10}
RH_2
T_{16}
T_9
RH_1
T_{15}

Panel 12

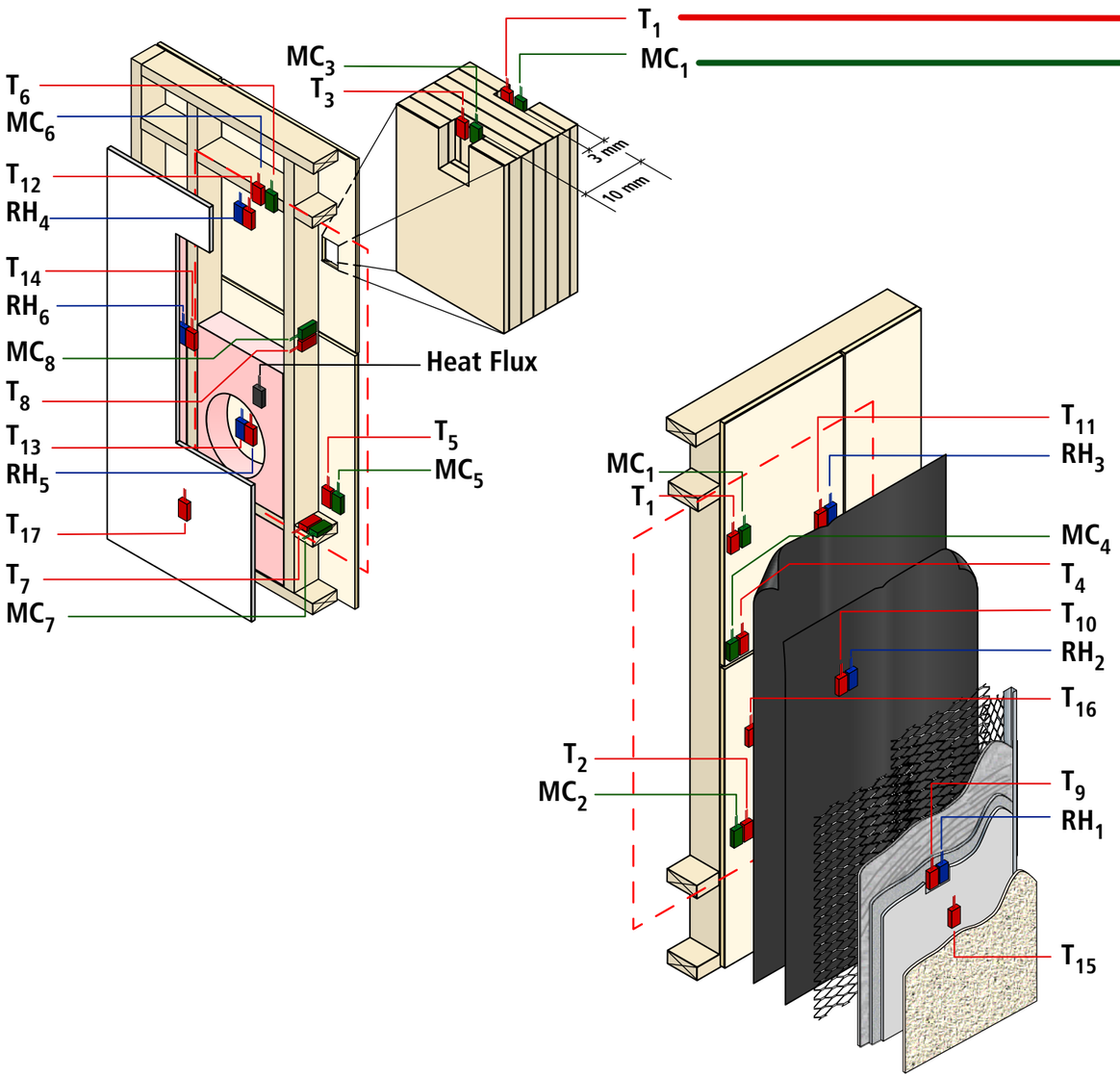
T1
MC1
MC3
T3
T6
MC6
T12
RH4
T14
RH6
MC8
T8
T13
RH5
T17
T7
MC7
3 mm
10 mm
Heat Flux
T5
MC5
T11
RH3
MC4
T4
T10
RH2
T16
T9
RH1
T15
T2
MC2

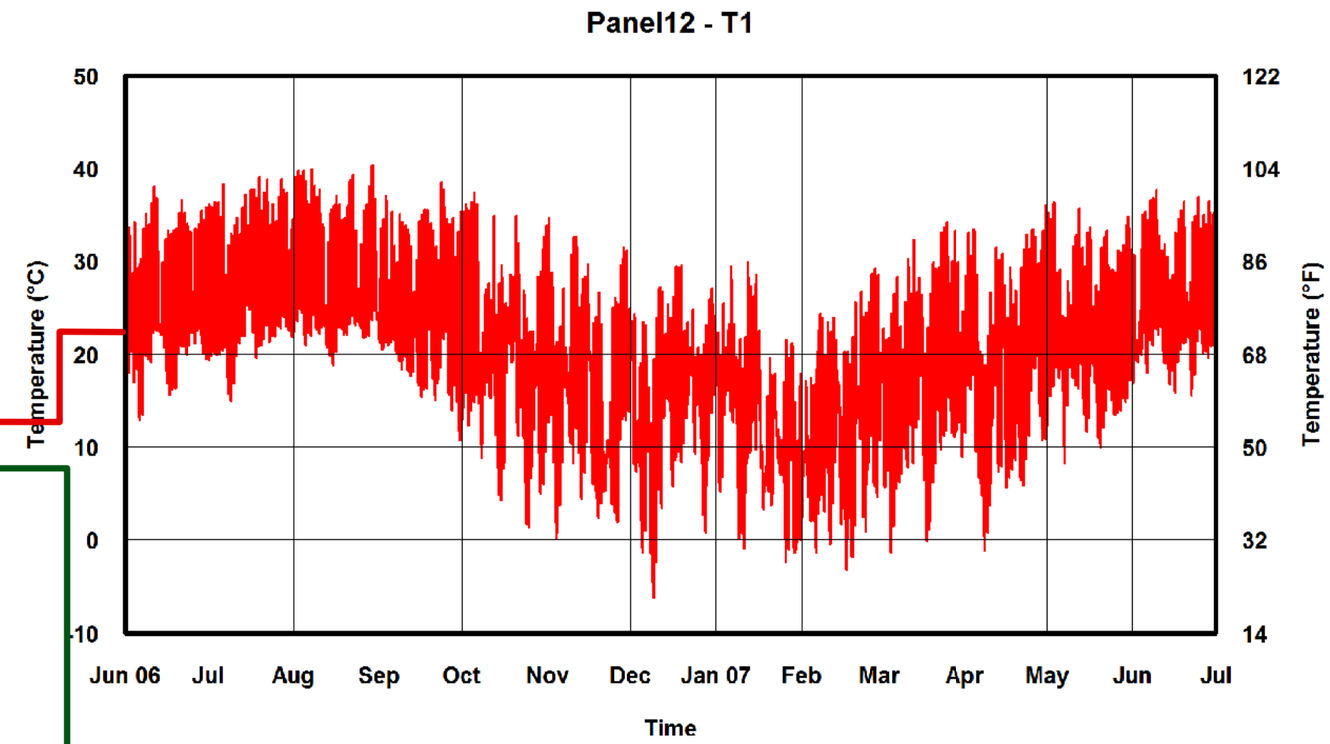
Panel12 - T1
Temperature (°C)
Temperature (°F)
50
40
30
20
10
0
-10
122
104
86
68
50
32
14
Jun 06
Jul
Aug
Sep
Oct
Nov
Dec
Jan 07
Feb
Mar
Apr
May
Jun
Jul
Time

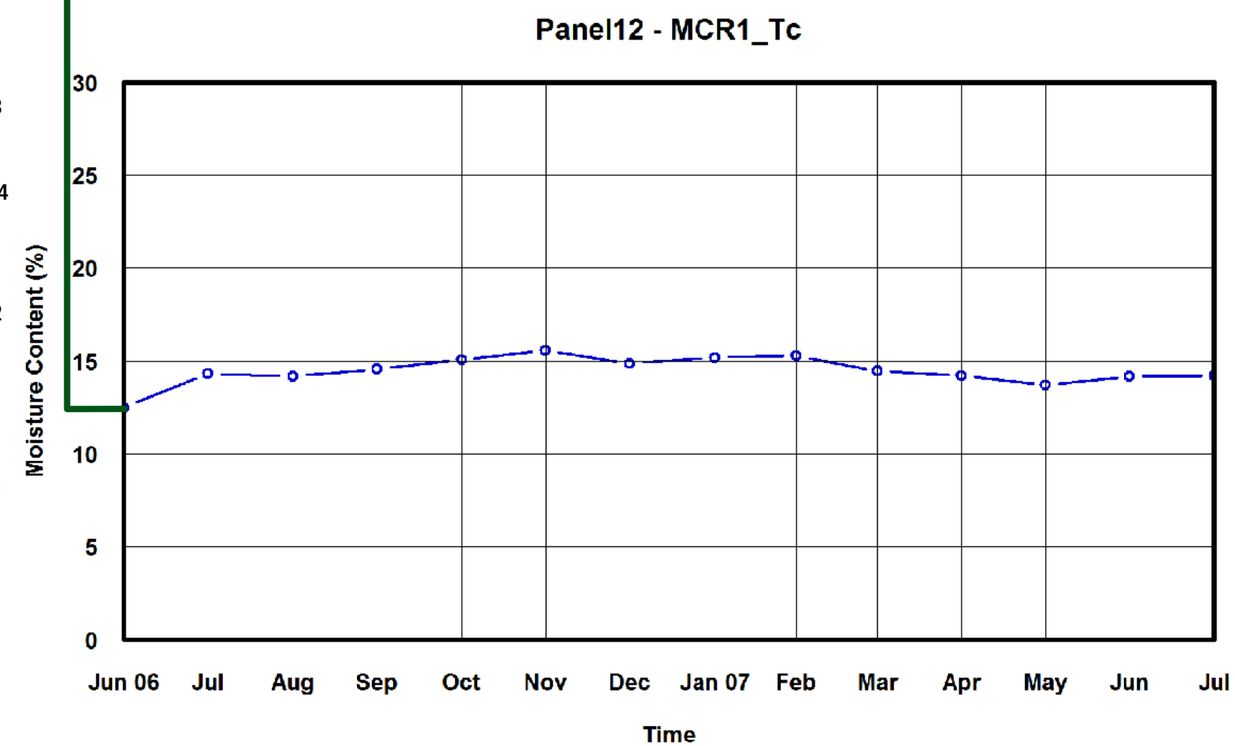
Panel12 - MCR1_Tc
Moisture Content (%)
30
25
20
15
10
5
0
Jun 06
Jul
Aug
Sep
Oct
Nov
Dec
Jan 07
Feb
Mar
Apr
May
Jun
Jul
Time

Panel 12

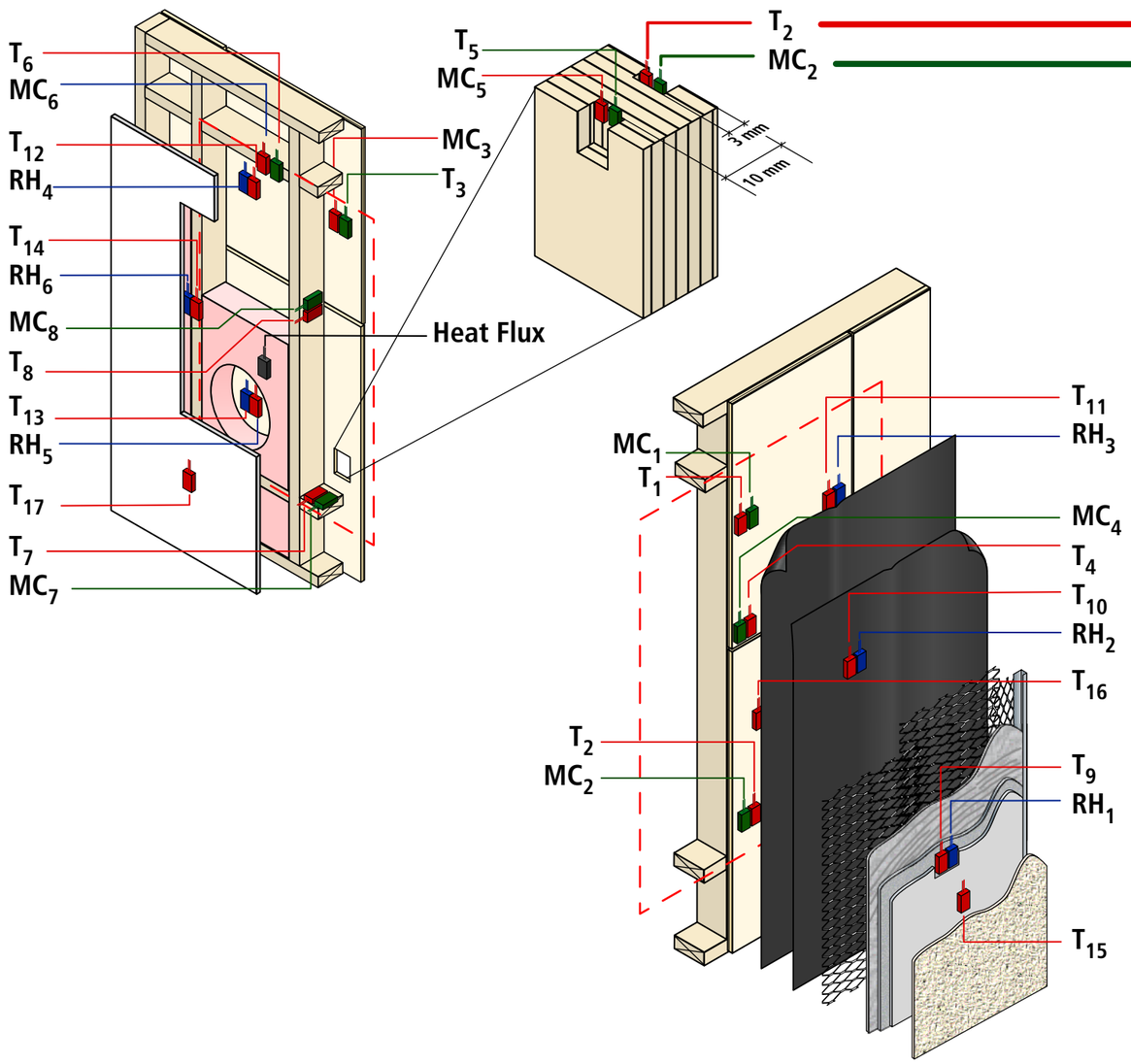
T_6
MC_6
T_{12}
RH_4
T_{14}
RH_6
MC_8
T_8
T_{13}
RH_5
T_{17}
T_7
MC_7
T_5
MC_5
MC_3
T_3
Heat Flux
T_2
MC_2
3 mm
10 mm
MC_1
T_1
T_{11}
RH_3
MC_4
T_4
T_{10}
RH_2
T_{16}
T_2
MC_2
T_9
RH_1
T_{15}

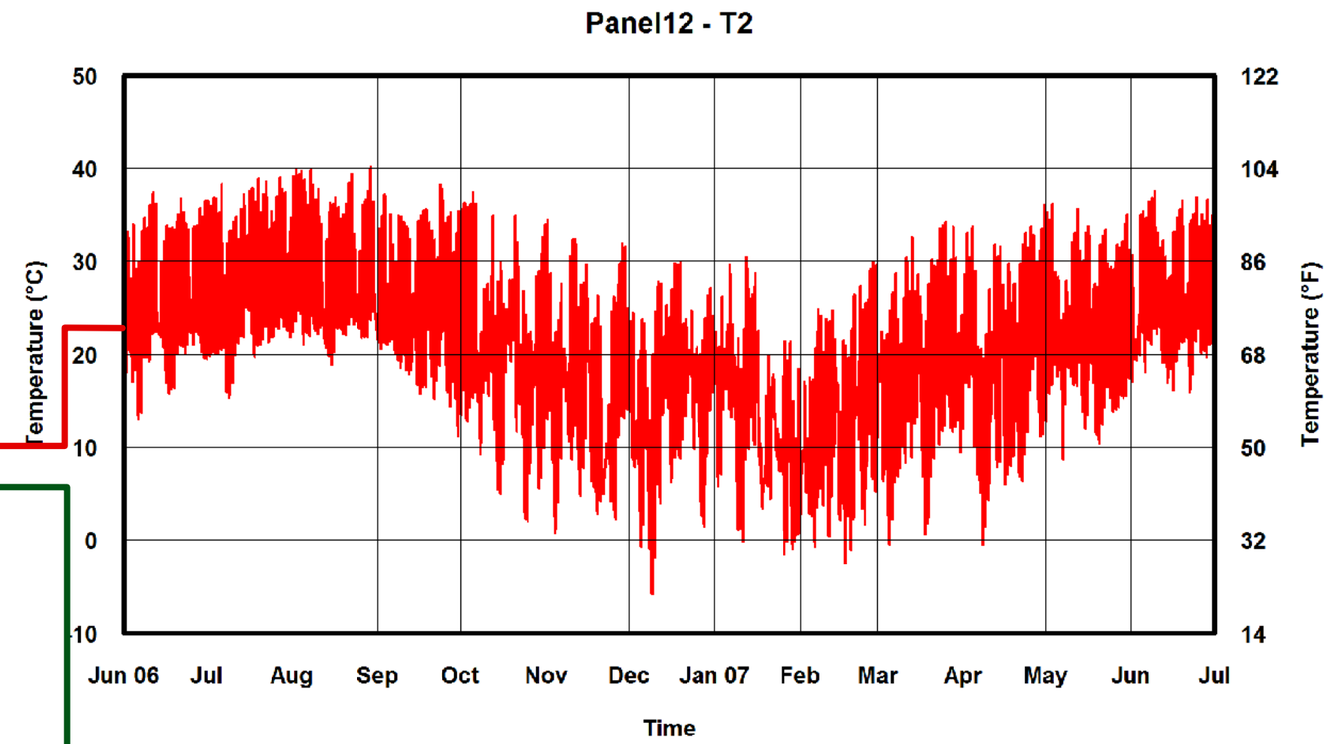
Panel12 - T2
Temperature (°C)
Temperature (°F)
50
40
30
20
10
0
-10
122
104
86
68
50
32
14
Jun 06
Jul
Aug
Sep
Oct
Nov
Dec
Jan 07
Feb
Mar
Apr
May
Jun
Jul
Time

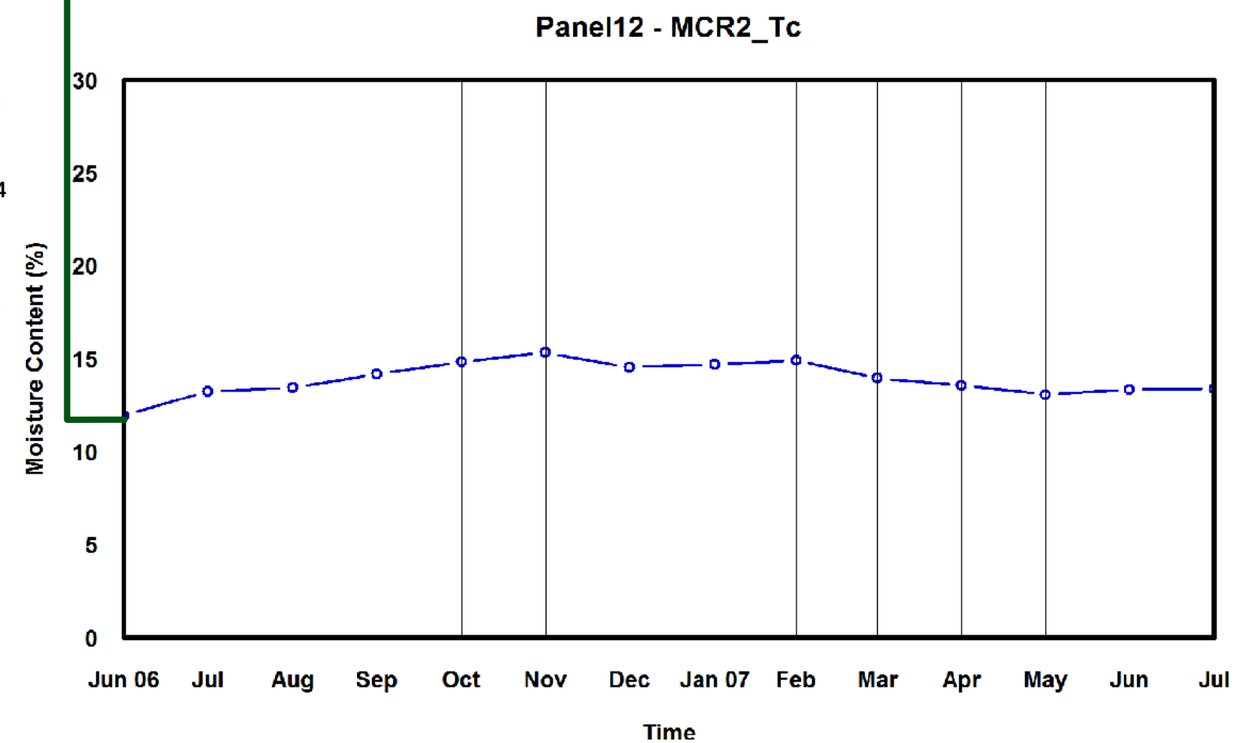
Panel12 - MCR2_Tc
Moisture Content (%)
30
25
20
15
10
5
0
Jun 06
Jul
Aug
Sep
Oct
Nov
Dec
Jan 07
Feb
Mar
Apr
May
Jun
Jul
Time

Panel 12

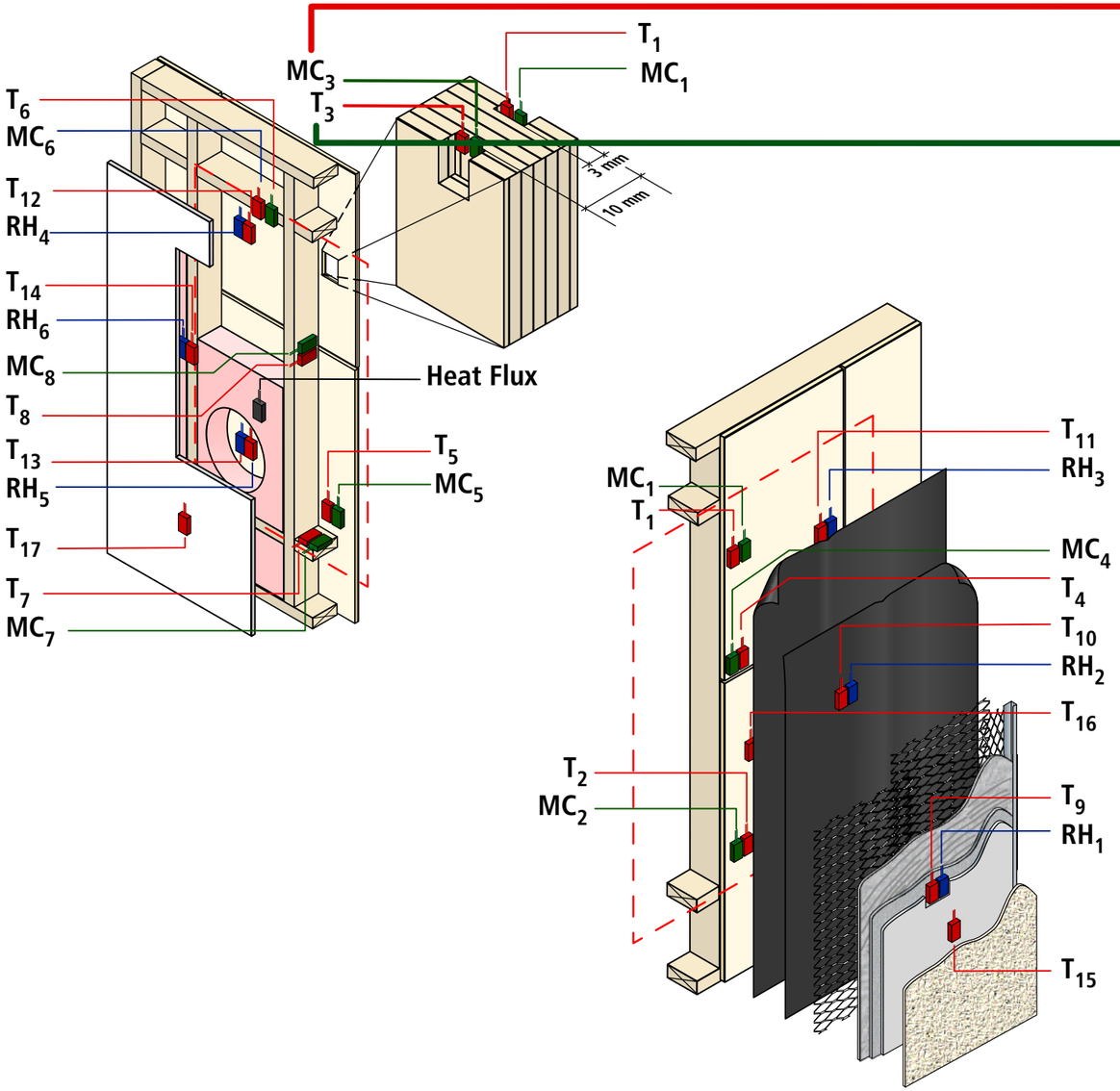
T_6
MC_6
T_{12}
RH_4
T_{14}
RH_6
MC_8
T_8
T_{13}
RH_5
T_{17}
T_7
MC_7
MC_3
T_3
T_1
MC_1
3 mm
10 mm
Heat Flux
T_5
MC_5
MC_1
T_1
T_{11}
RH_3
MC_4
T_4
T_{10}
RH_2
T_{16}
T_2
MC_2
T_9
RH_1
T_{15}

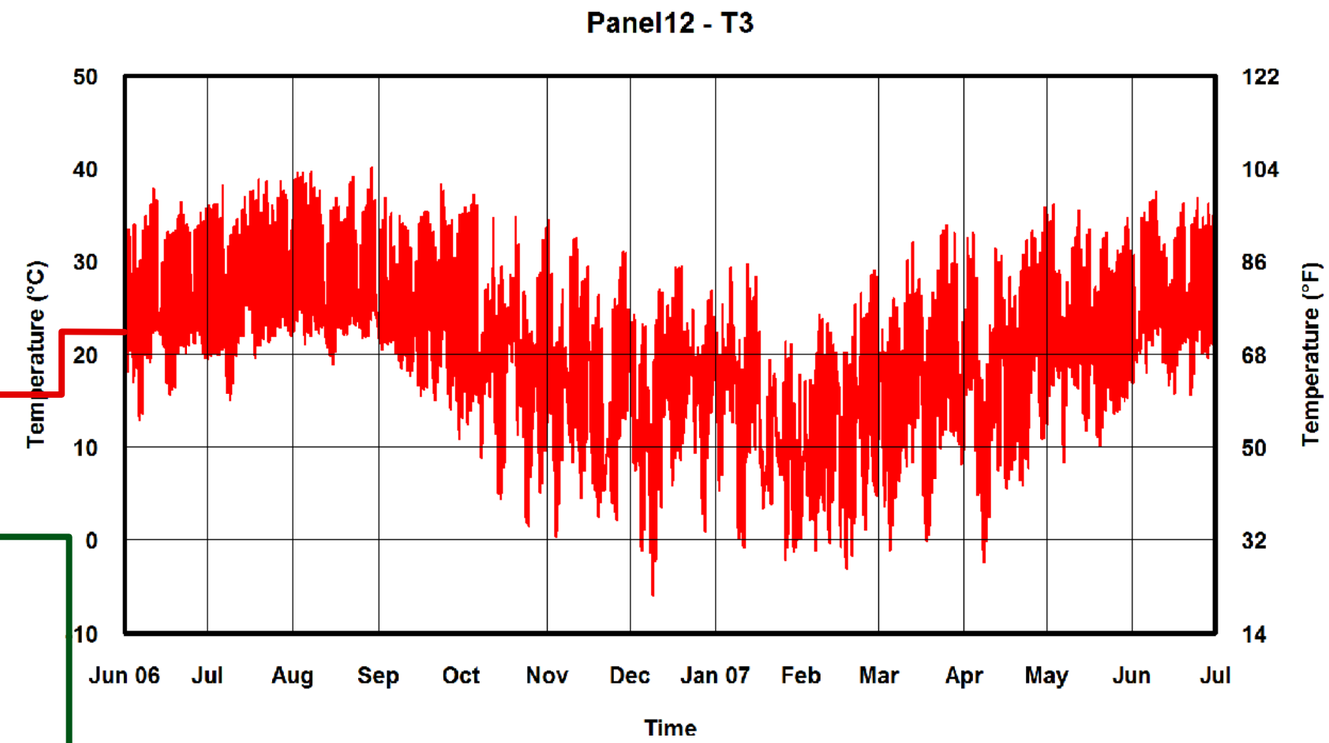
Panel12 - T3
Temperature (°C)
Temperature (°F)
50
40
30
20
10
0
-10
122
104
86
68
50
32
14
Jun 06
Jul
Aug
Sep
Oct
Nov
Dec
Jan 07
Feb
Mar
Apr
May
Jun
Jul
Time

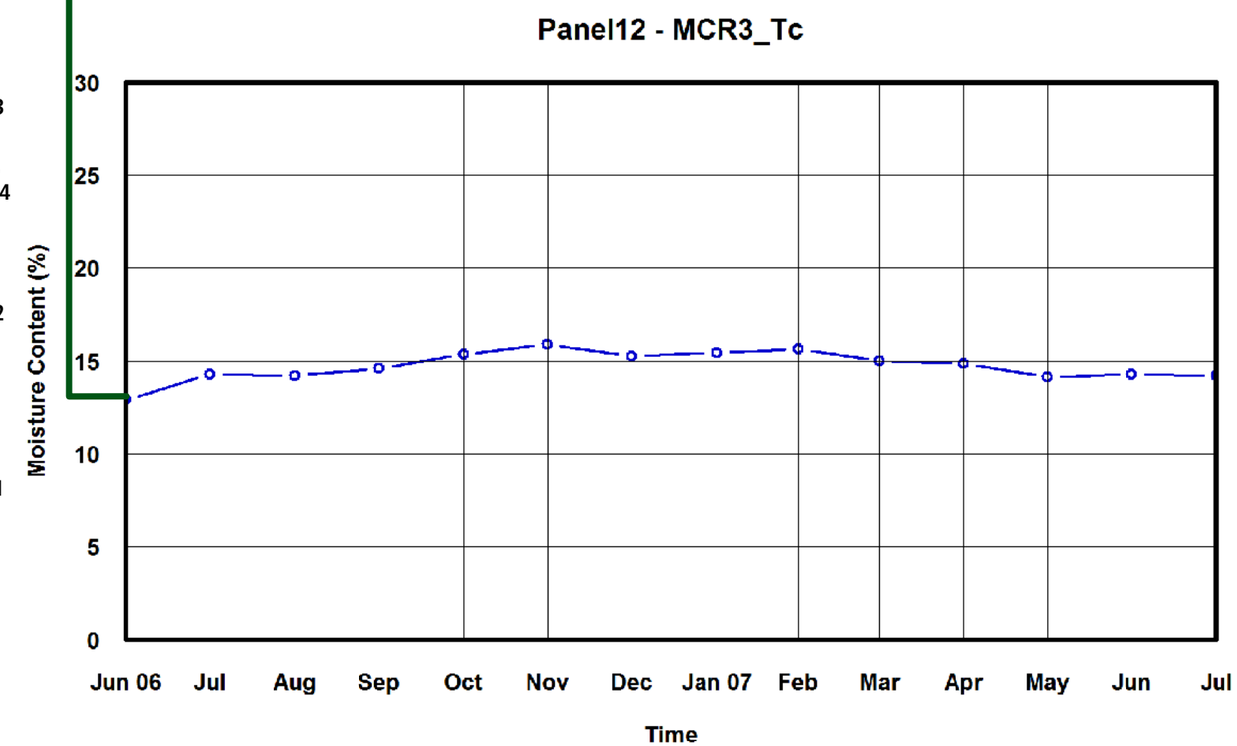
Panel12 - MCR3_Tc
Moisture Content (%)
30
25
20
15
10
5
0
Jun 06
Jul
Aug
Sep
Oct
Nov
Dec
Jan 07
Feb
Mar
Apr
May
Jun
Jul
Time

Panel 12

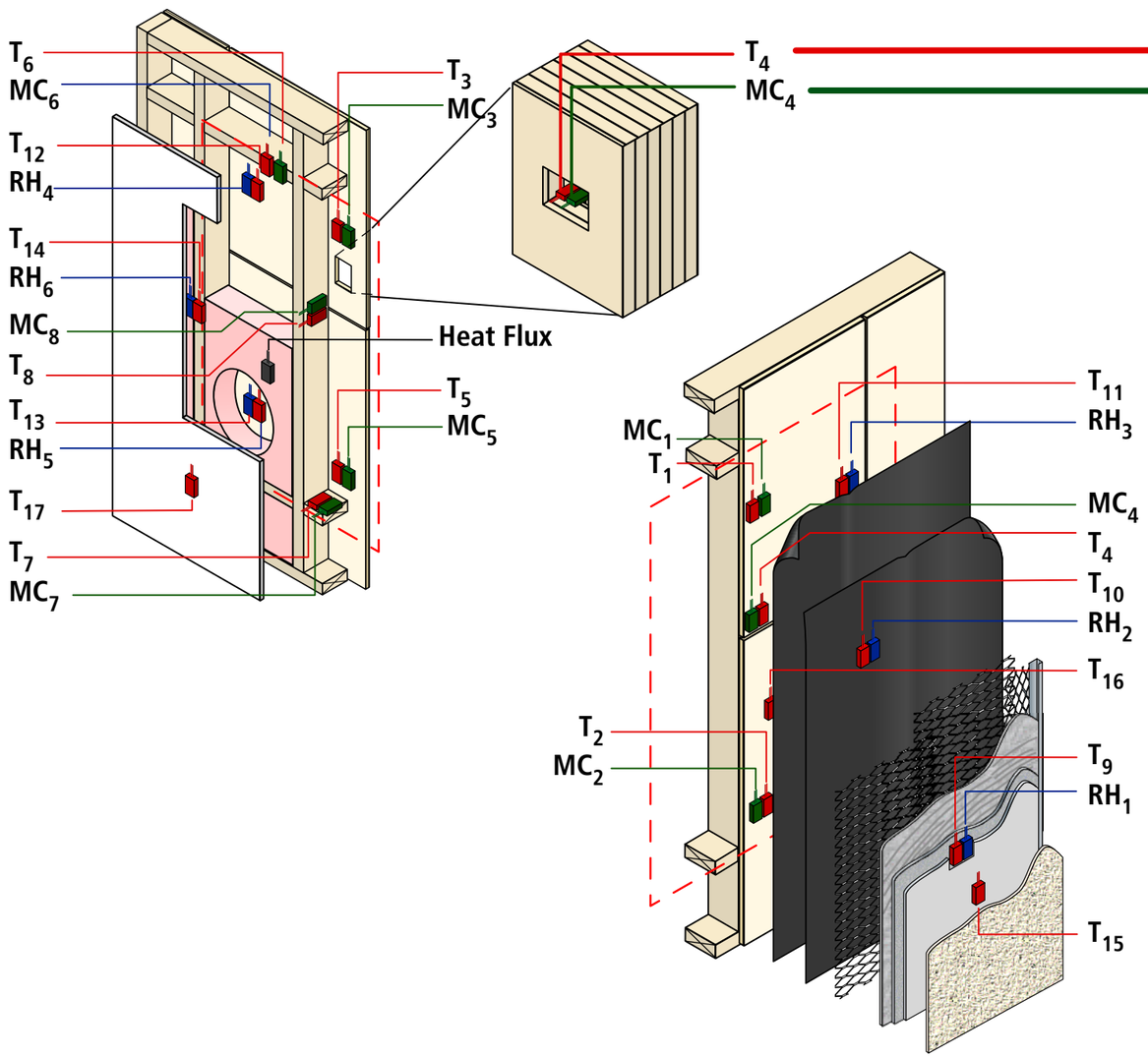
T_6
MC_6
T_{12}
RH_4
T_{14}
RH_6
MC_8
T_8
T_{13}
RH_5
T_{17}
T_7
MC_7
T_3
MC_3
Heat Flux
T_5
MC_5
T_4
MC_4
MC_1
T_1
T_2
MC_2
T_{11}
RH_3
MC_4
T_4
T_{10}
RH_2
T_{16}
T_9
RH_1
T_{15}

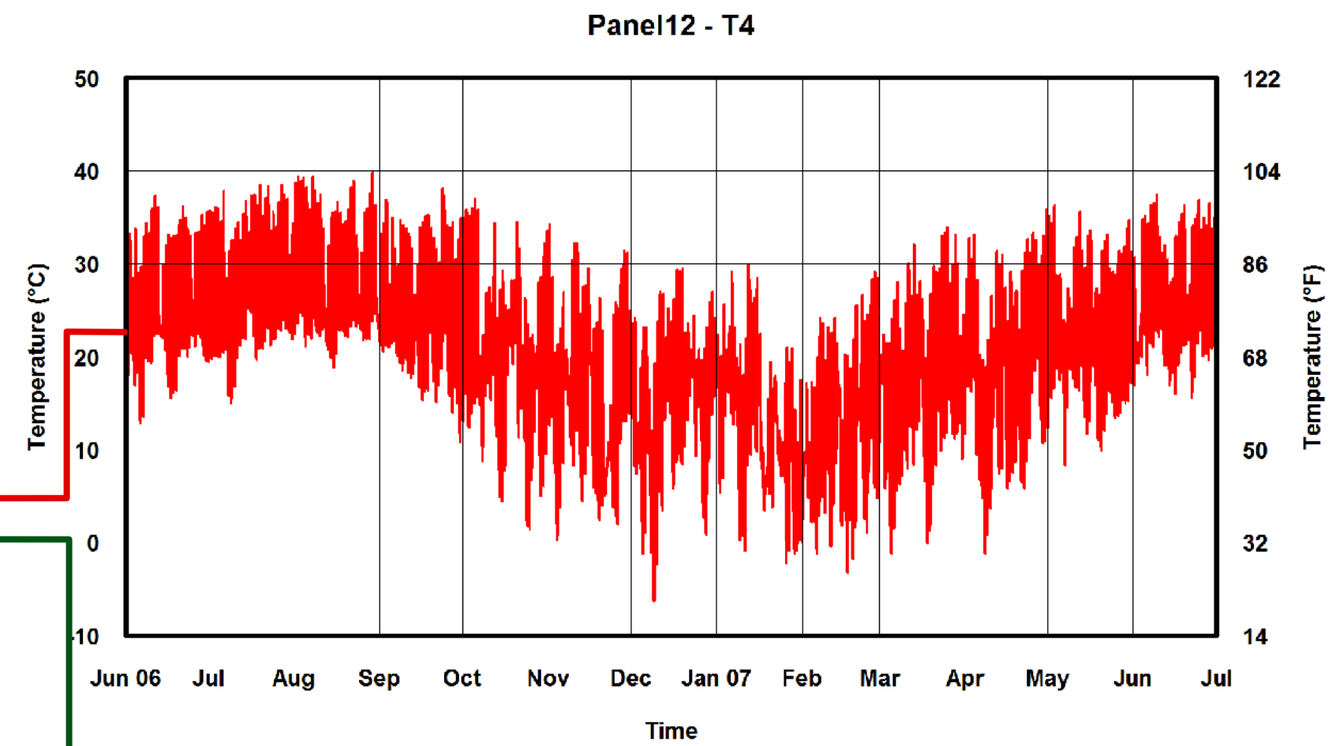
Panel12 - T4
Temperature (°C)
Temperature (°F)
50
40
30
20
10
0
-10
122
104
86
68
50
32
14
Jun 06
Jul
Aug
Sep
Oct
Nov
Dec
Jan 07
Feb
Mar
Apr
May
Jun
Jul
Time

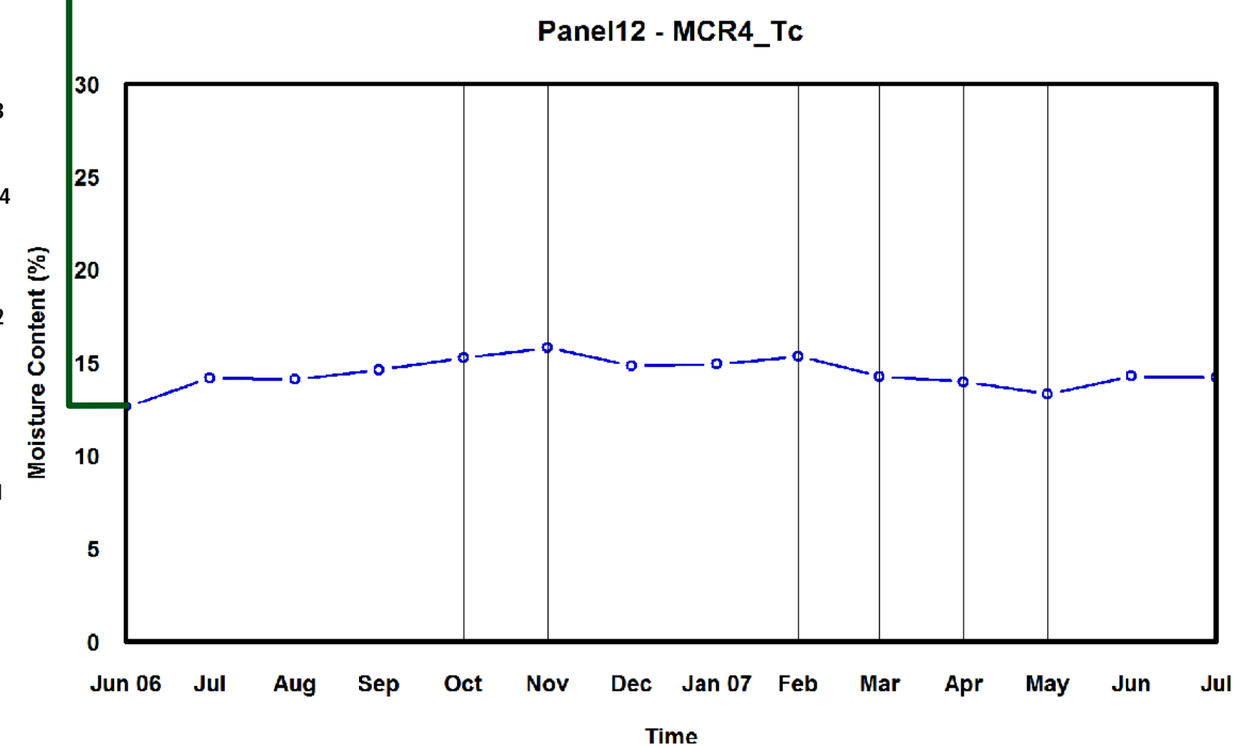
Panel12 - MCR4_Tc
Moisture Content (%)
30
25
20
15
10
5
0
Jun 06
Jul
Aug
Sep
Oct
Nov
Dec
Jan 07
Feb
Mar
Apr
May
Jun
Jul
Time

Panel 12

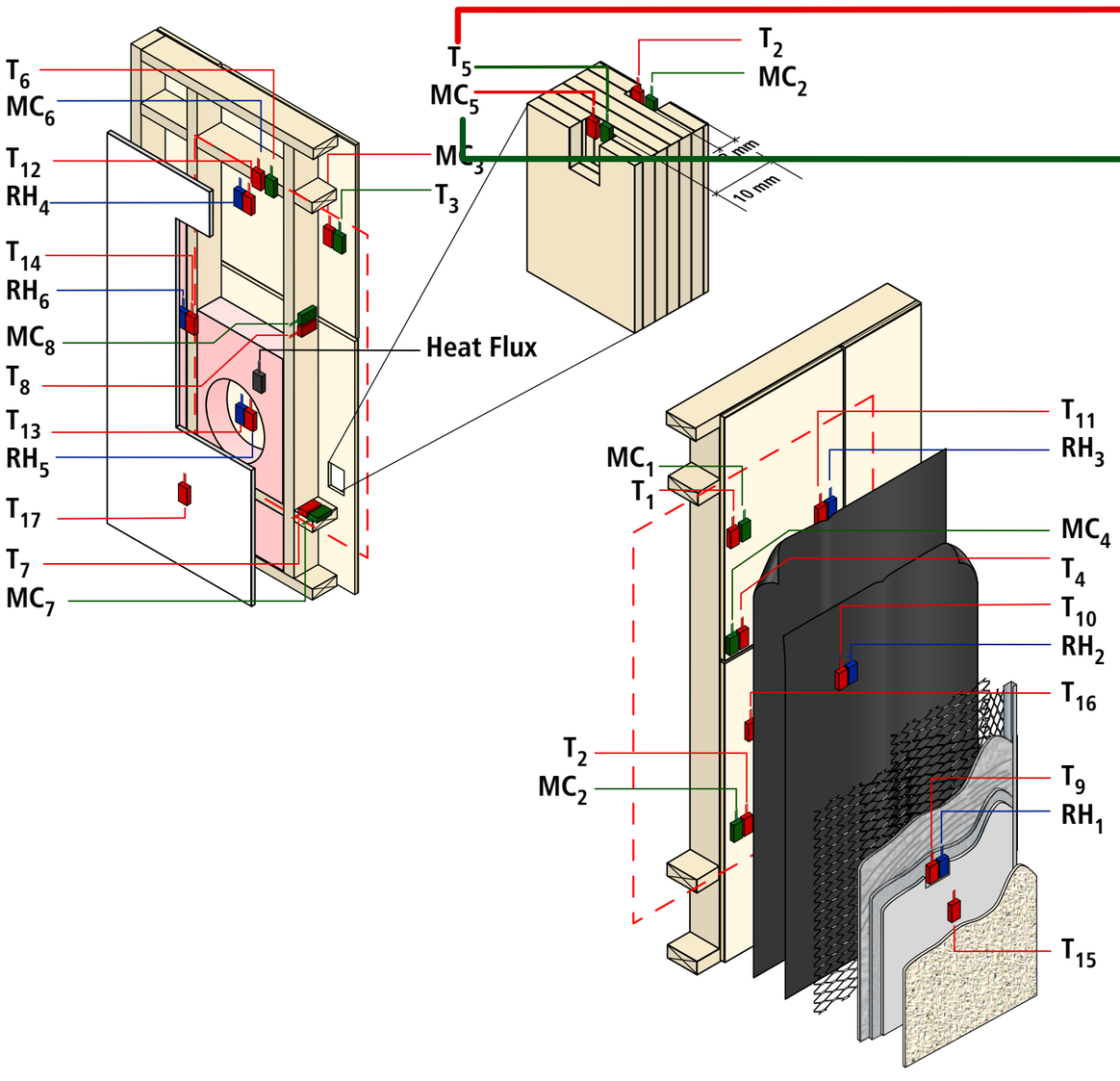
T_6
MC_6
T_{12}
RH_4
T_{14}
RH_6
MC_8
T_8
T_{13}
RH_5
T_{17}
T_7
MC_7
T_5
MC_5
MC_3
T_3
T_2
MC_2
5 mm
10 mm
Heat Flux
MC_1
T_1
T_{11}
RH_3
MC_4
T_4
T_{10}
RH_2
T_{16}
T_2
MC_2
T_9
RH_1
T_{15}

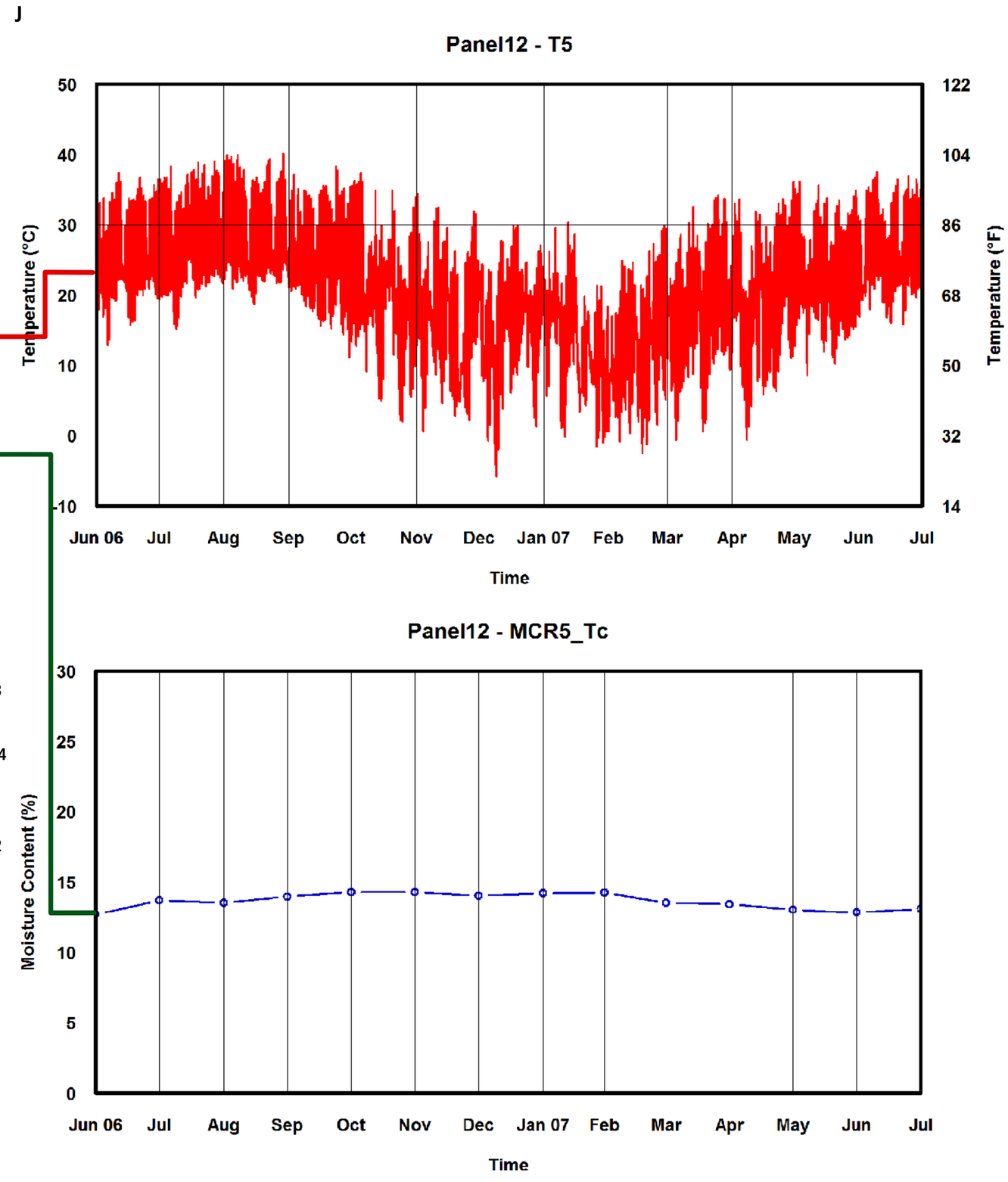
J
Panel12 - T5
Temperature (°C)
Temperature (°F)
50
40
30
20
10
0
-10
122
104
86
68
50
32
14
Jun 06
Jul
Aug
Sep
Oct
Nov
Dec
Jan 07
Feb
Mar
Apr
May
Jun
Jul
Time
Panel12 - MCR5_Tc
Moisture Content (%)
30
25
20
15
10
5
0
Jun 06
Jul
Aug
Sep
Oct
Nov
Dec
Jan 07
Feb
Mar
Apr
May
Jun
Jul
Time

Panel 12

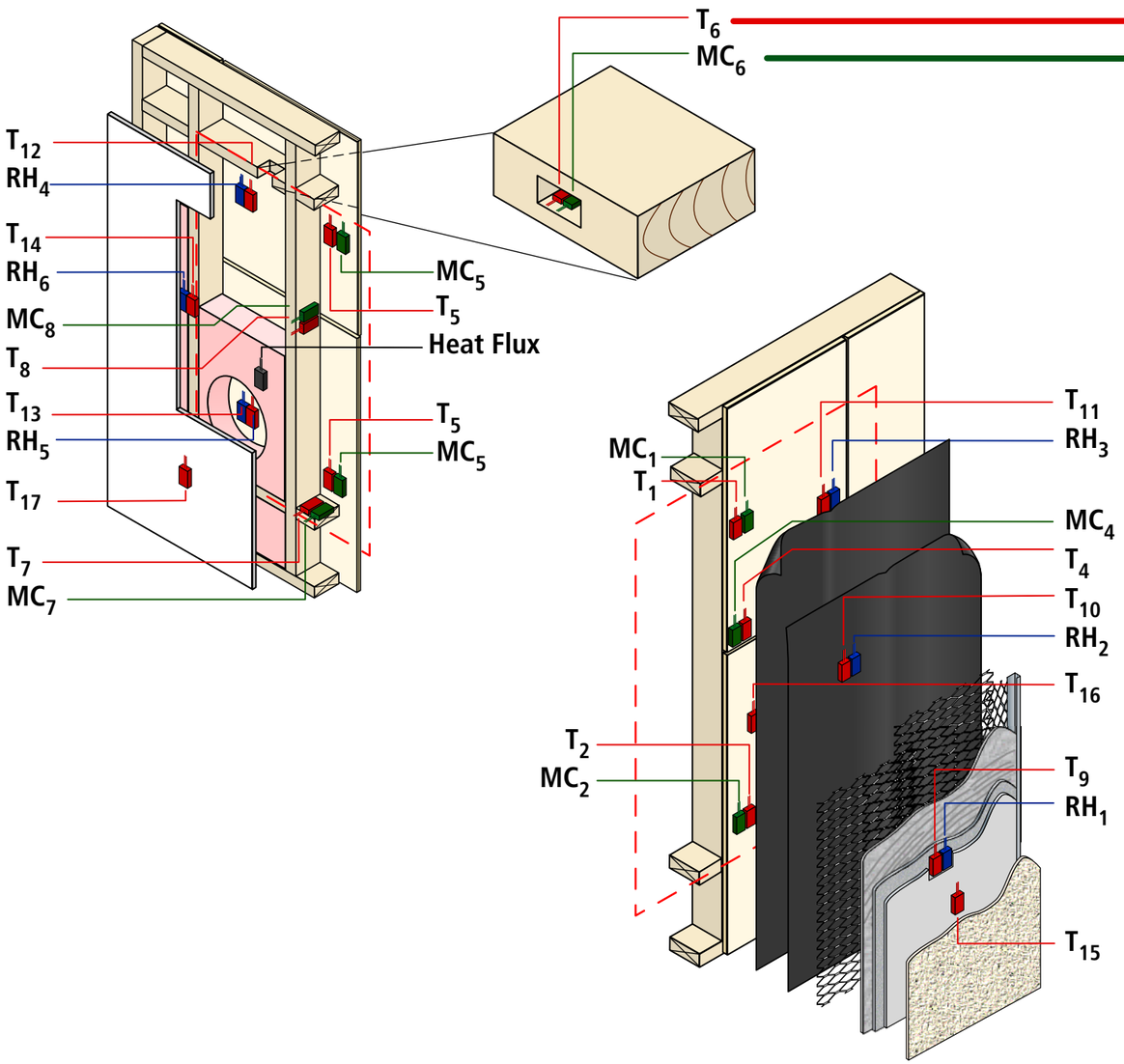
T_6
MC_6
T_{12}
RH_4
T_{14}
RH_6
MC_8
T_8
T_{13}
RH_5
T_{17}
T_7
MC_7
MC_5
T_5
Heat Flux
T_5
MC_5
MC_1
T_1
T_2
MC_2
T_{11}
RH_3
MC_4
T_4
T_{10}
RH_2
T_{16}
T_9
RH_1
T_{15}

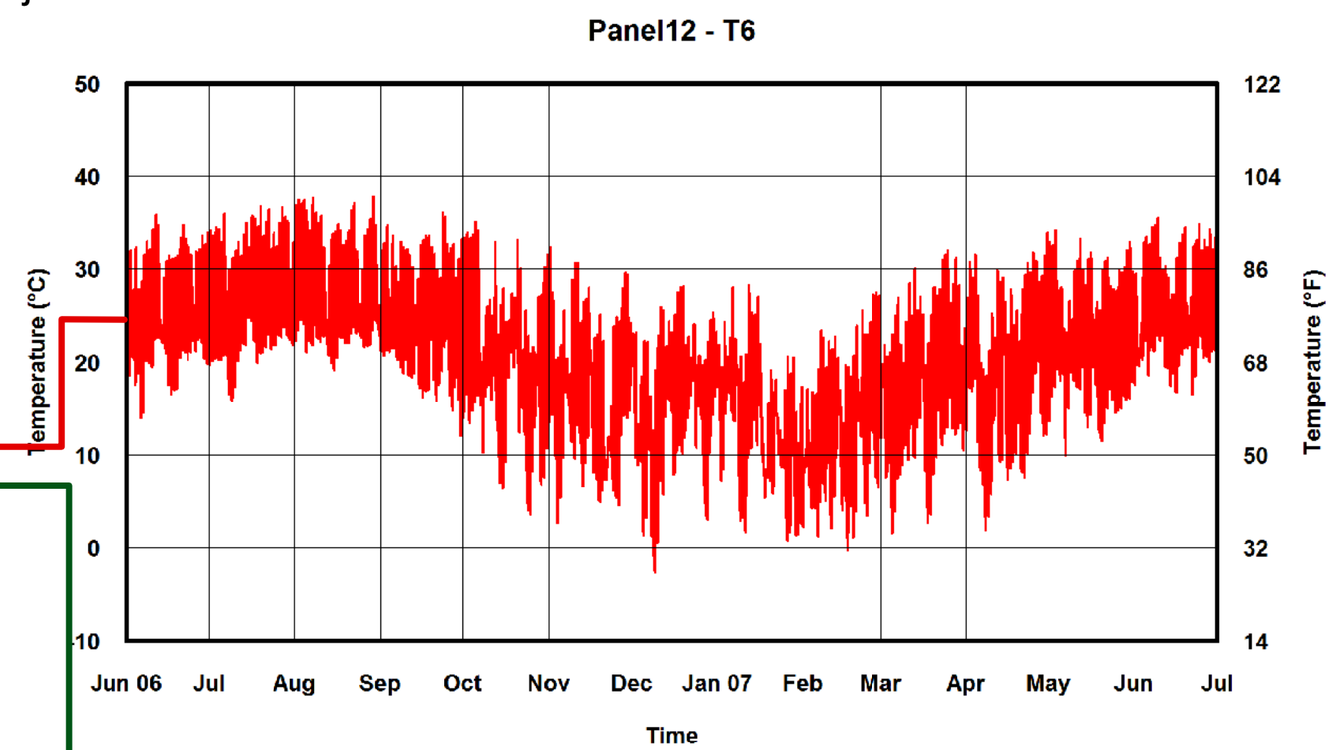
Panel12 - T6
Temperature (°C)
Temperature (°F)
50
40
30
20
10
0
-10
122
104
86
68
50
32
14
Jun 06
Jul
Aug
Sep
Oct
Nov
Dec
Jan 07
Feb
Mar
Apr
May
Jun
Jul
Time

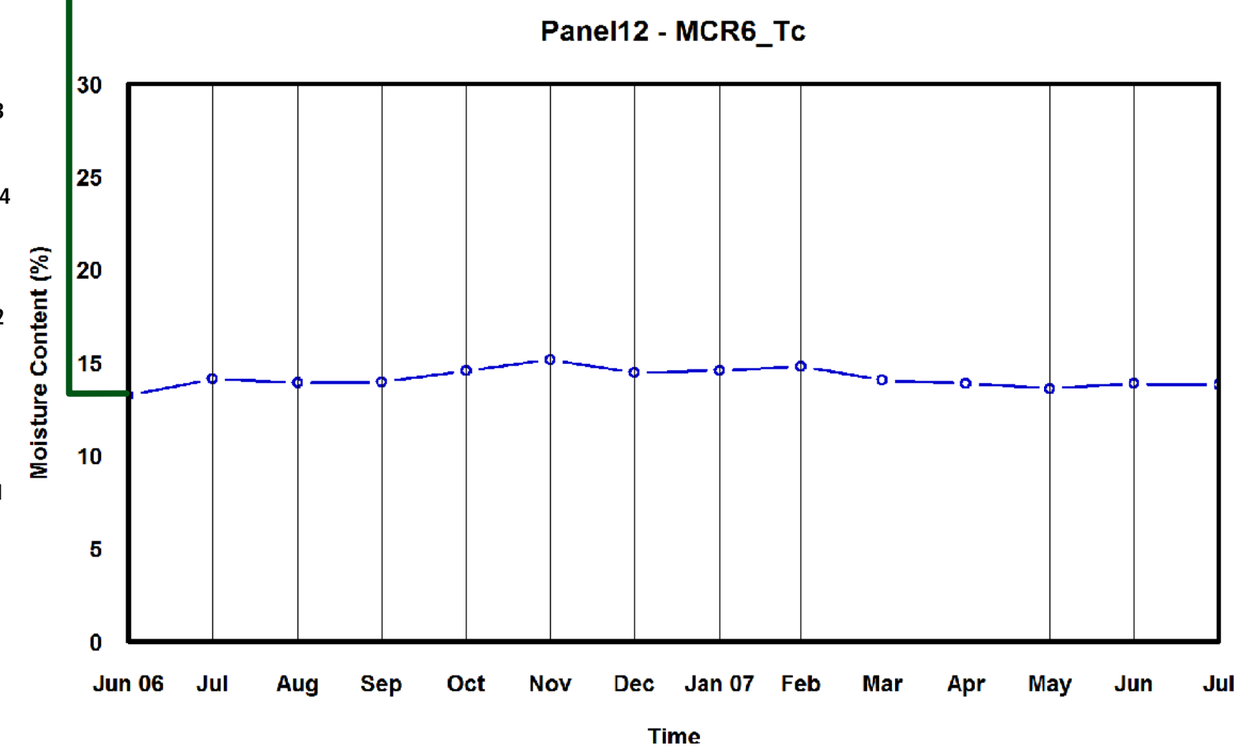
Panel12 - MCR6_Tc
Moisture Content (%)
30
25
20
15
10
5
0
Jun 06
Jul
Aug
Sep
Oct
Nov
Dec
Jan 07
Feb
Mar
Apr
May
Jun
Jul
Time

Panel 12

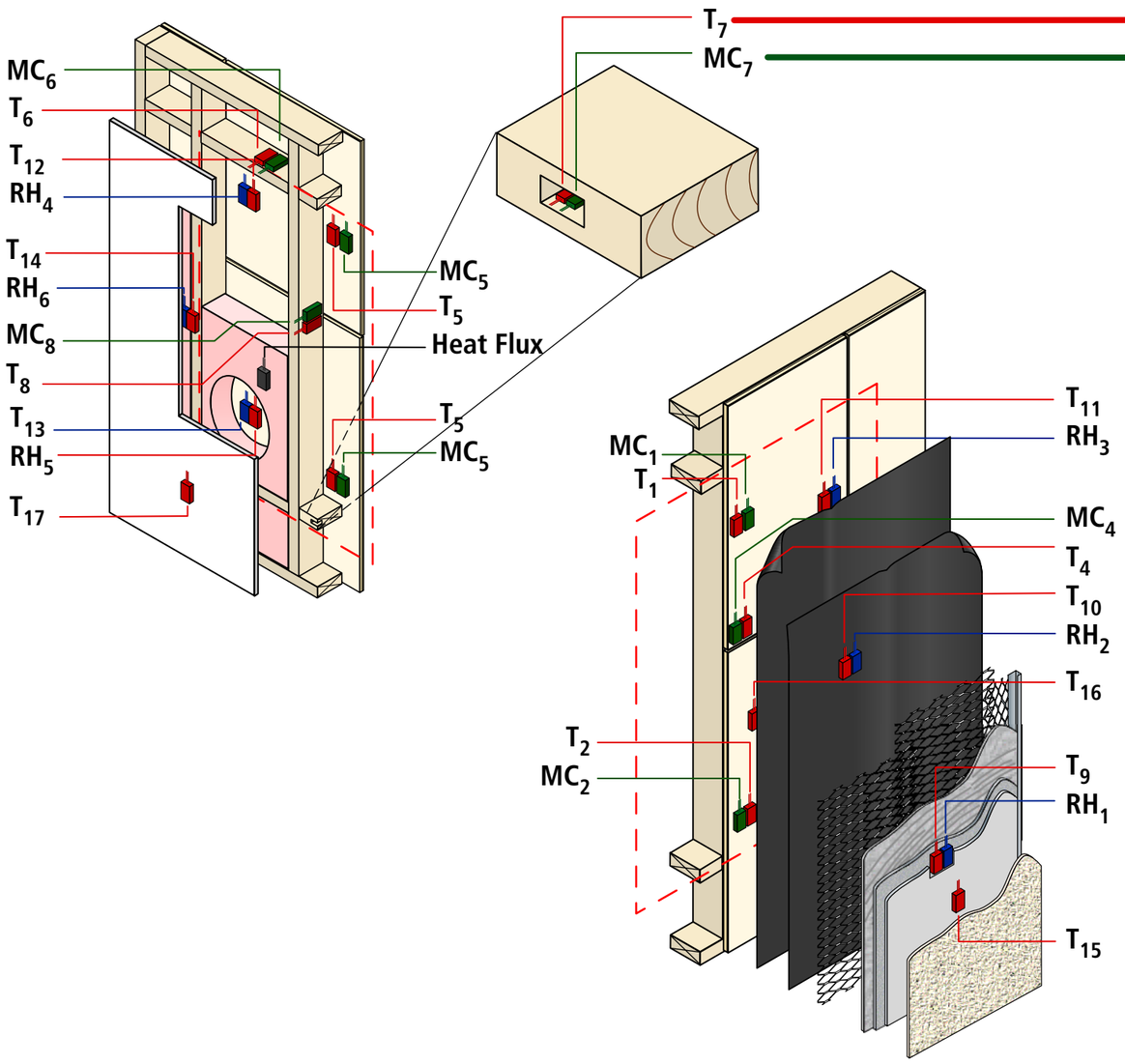
MC6
T6
T12
RH4
T14
RH6
MC8
T8
T13
RH5
T17
MC5
T5
Heat Flux
T5
MC5
T7
MC7
MC1
T1
T2
MC2
T11
RH3
MC4
T4
T10
RH2
T16
T9
RH1
T15

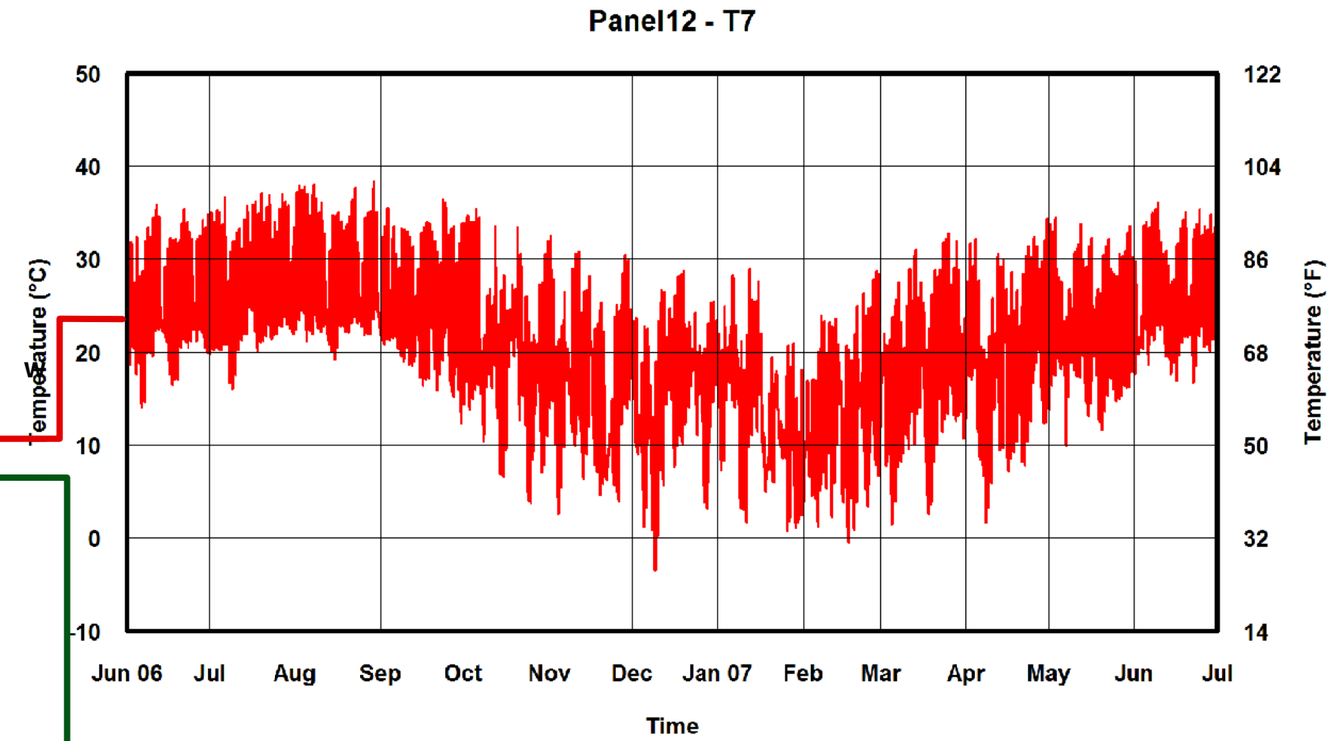
Panel12 - T7
Temperature (°C)
Temperature (°F)
50
40
30
20
10
0
-10
122
104
86
68
50
32
14
Jun 06
Jul
Aug
Sep
Oct
Nov
Dec
Jan 07
Feb
Mar
Apr
May
Jun
Jul
Time

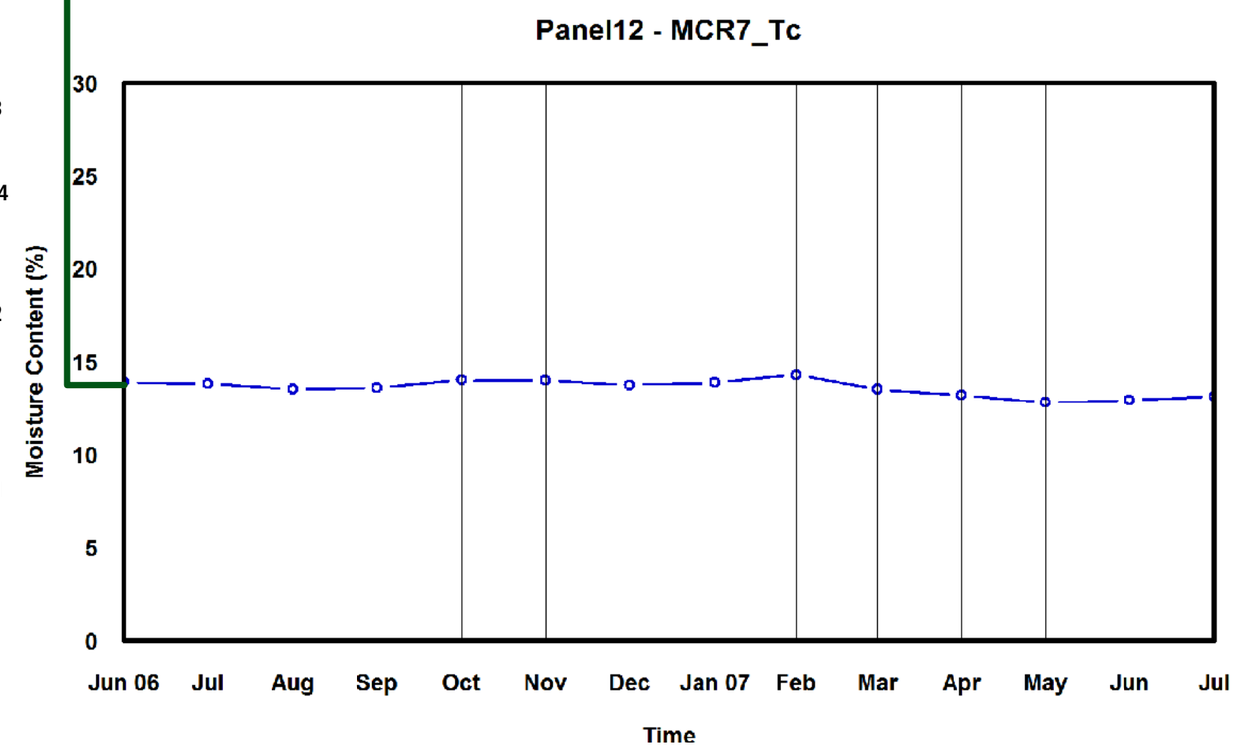
Panel12 - MCR7_Tc
Moisture Content (%)
30
25
20
15
10
5
0
Jun 06
Jul
Aug
Sep
Oct
Nov
Dec
Jan 07
Feb
Mar
Apr
May
Jun
Jul
Time

Panel 12

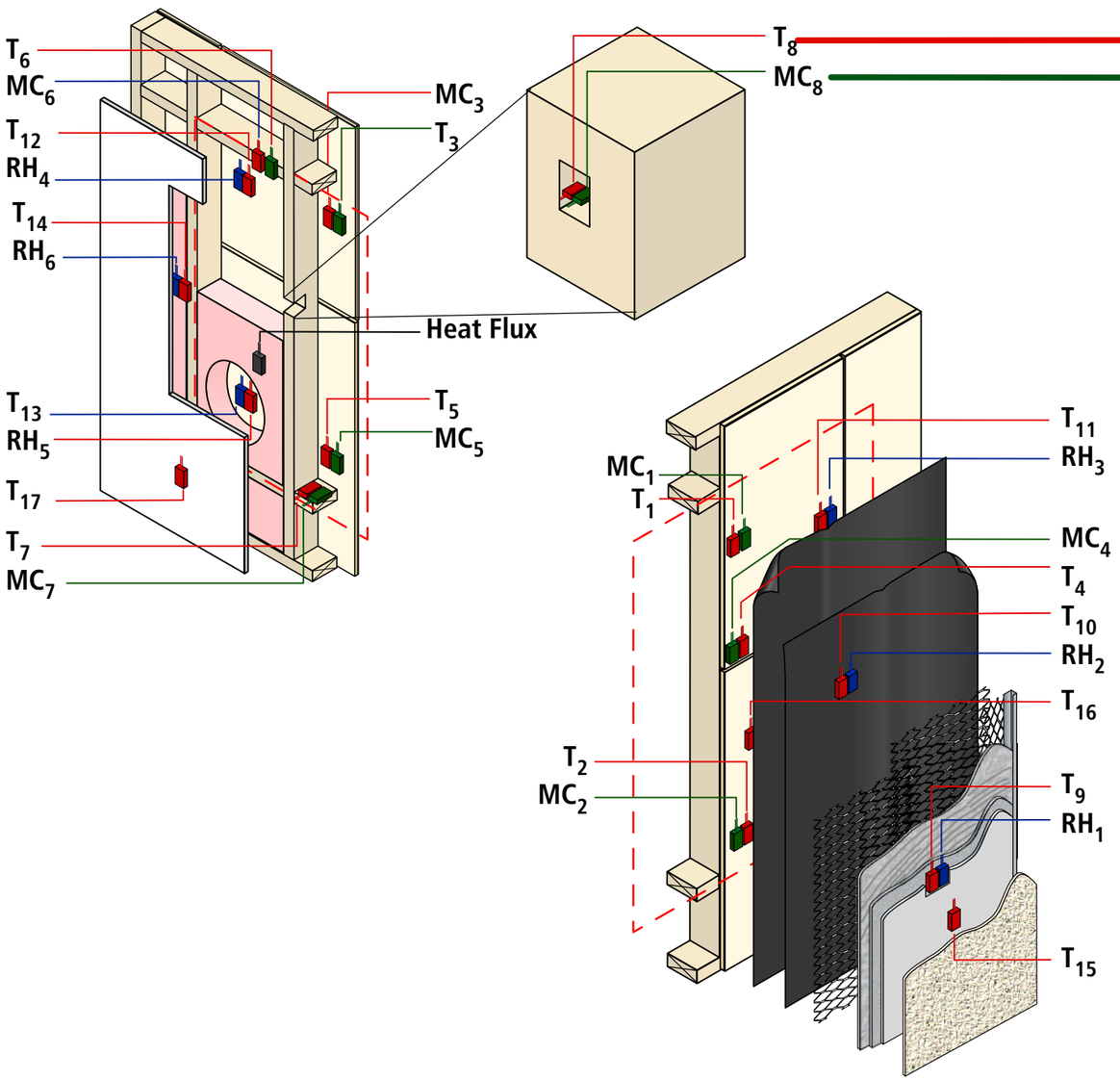
T_6
MC_6
T_{12}
RH_4
T_{14}
RH_6
MC_3
T_3
Heat Flux
T_{13}
RH_5
T_{17}
T_7
MC_7
T_5
MC_5
T_8
MC_8
MC_1
T_1
T_2
MC_2
T_{11}
RH_3
MC_4
T_4
T_{10}
RH_2
T_{16}
T_9
RH_1
T_{15}

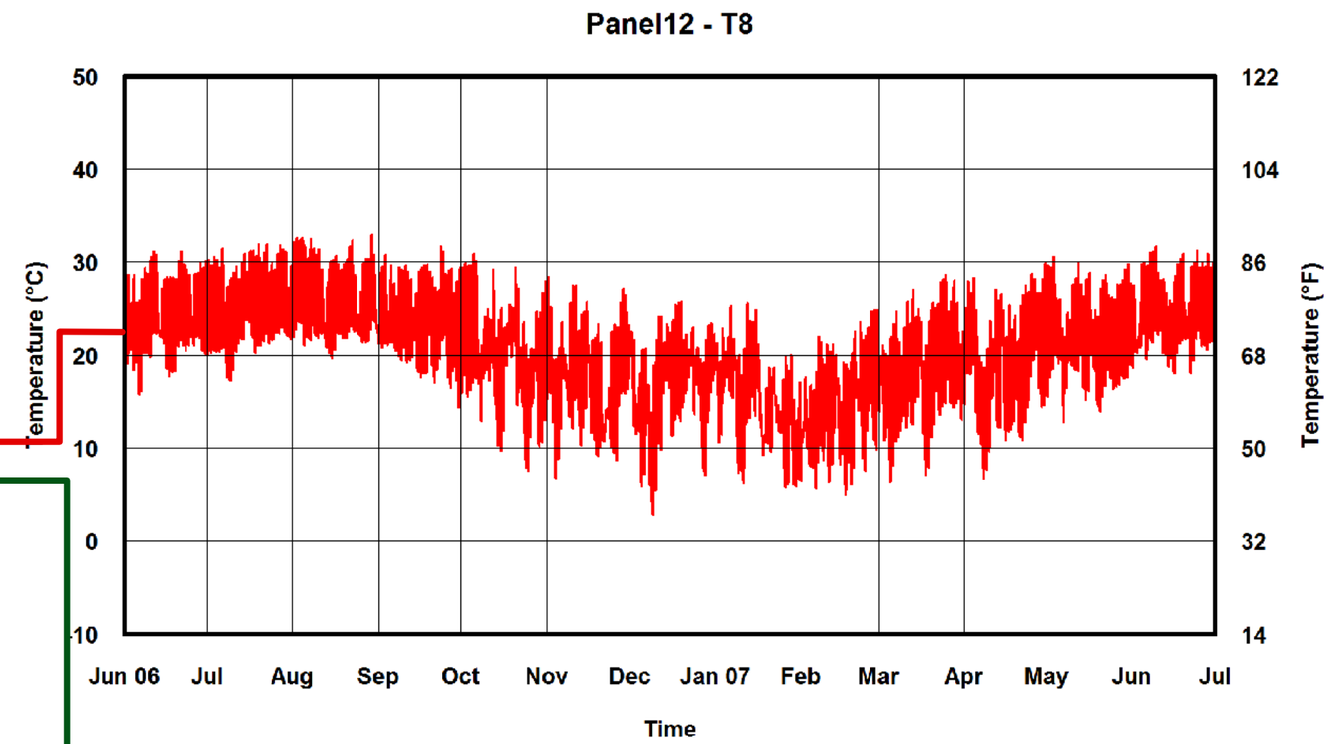
Panel12 - T8
Temperature (°C)
50
40
30
20
10
0
-10
Temperature (°F)
122
104
86
68
50
32
14
Jun 06
Jul
Aug
Sep
Oct
Nov
Dec
Jan 07
Feb
Mar
Apr
May
Jun
Jul
Time

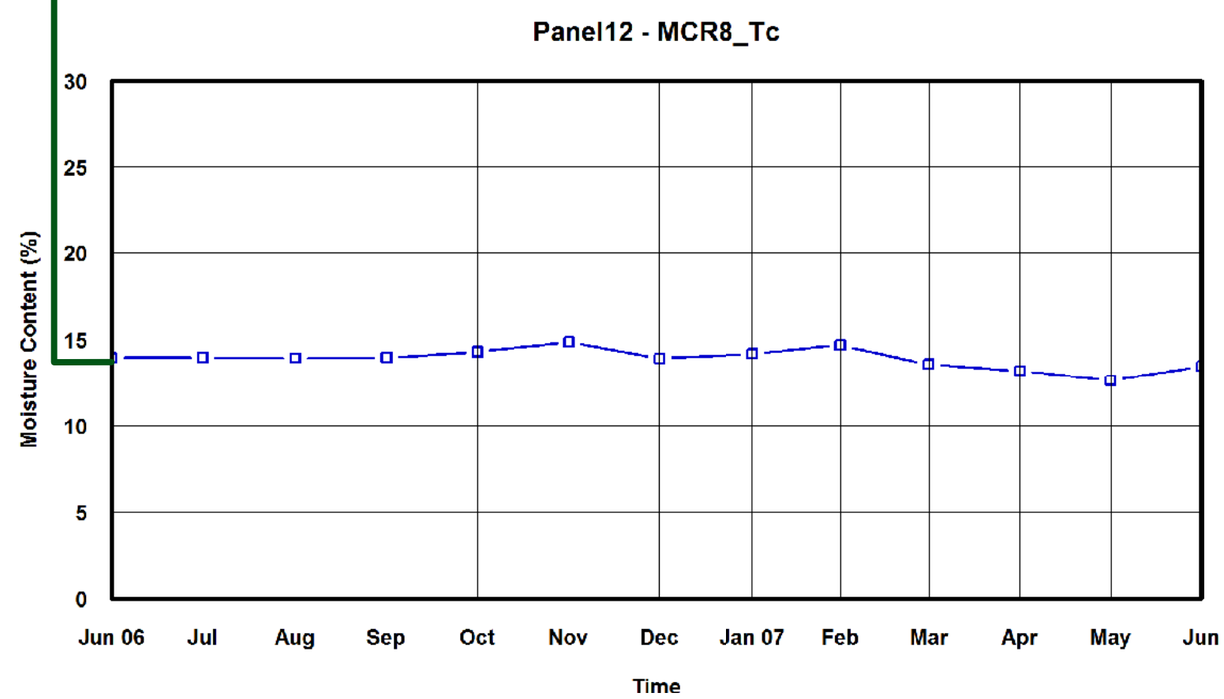
Panel12 - MCR8_Tc
Moisture Content (%)
30
25
20
15
10
5
0
Jun 06
Jul
Aug
Sep
Oct
Nov
Dec
Jan 07
Feb
Mar
Apr
May
Jun
Time

Panel 12

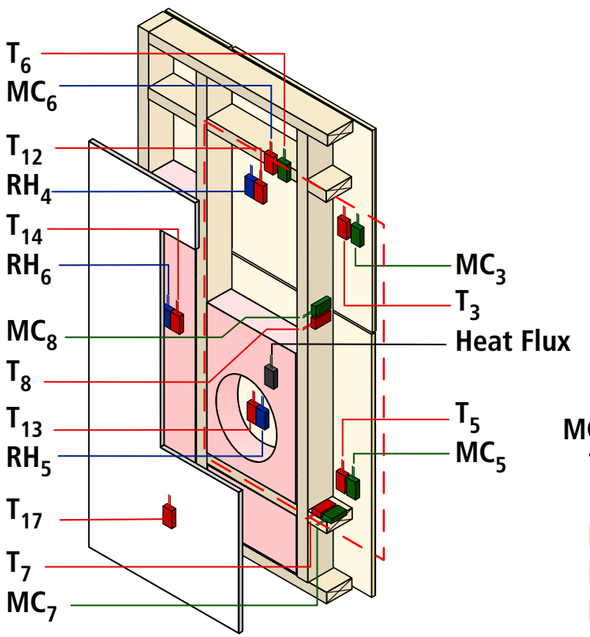
T_6
MC_6
T_{12}
RH_4
T_{14}
RH_6
MC_8
T_8
T_{13}
RH_5
T_{17}
T_7
MC_7
MC_3
T_3
Heat Flux
T_5
MC_5

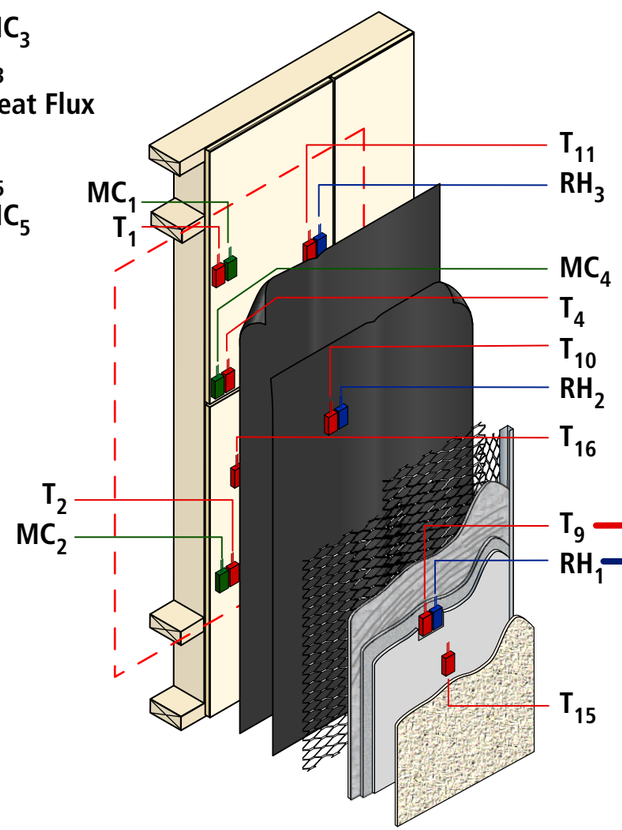
MC_1
T_1
T_2
MC_2
T_{11}
RH_3
MC_4
T_4
T_{10}
RH_2
T_{16}
T_9
RH_1
T_{15}

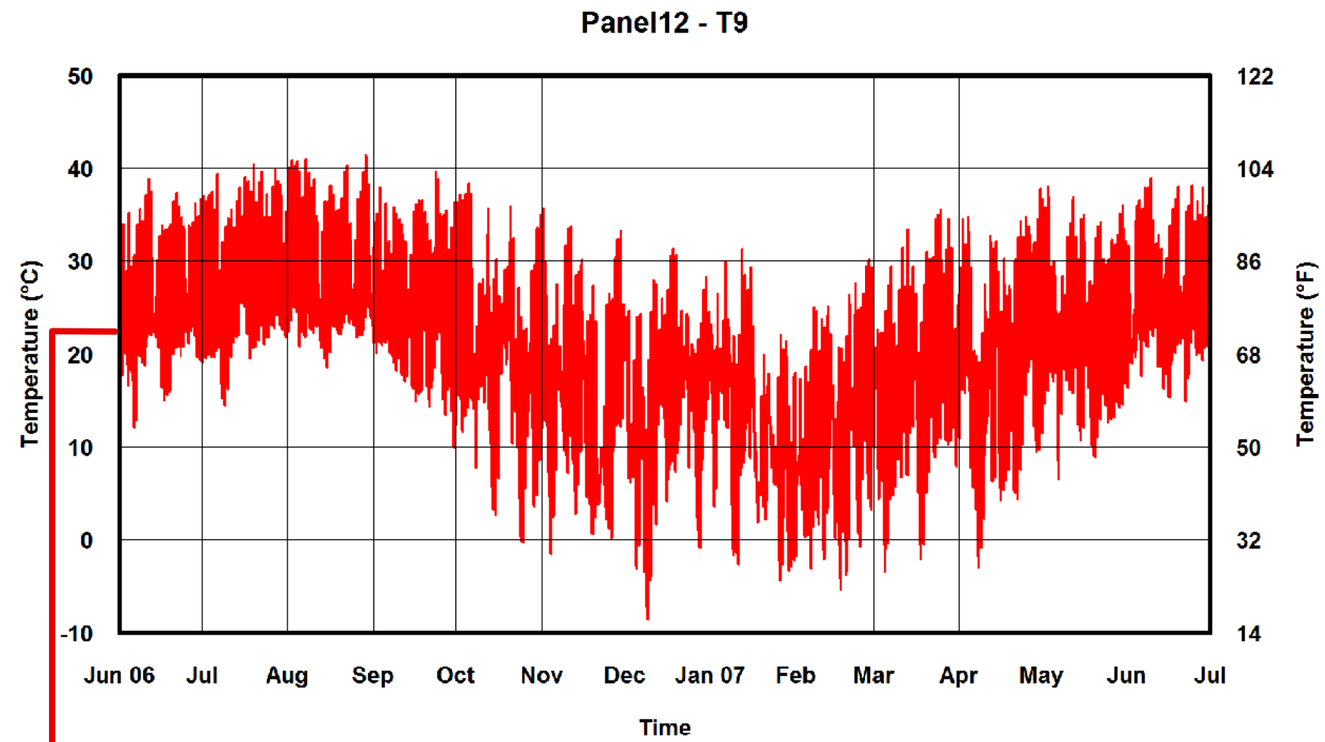
Panel12 - T9
Temperature (°C)
Temperature (°F)
50
40
30
20
10
0
-10
122
104
86
68
50
32
14
Jun 06
Jul
Aug
Sep
Oct
Nov
Dec
Jan 07
Feb
Mar
Apr
May
Jun
Jul
Time

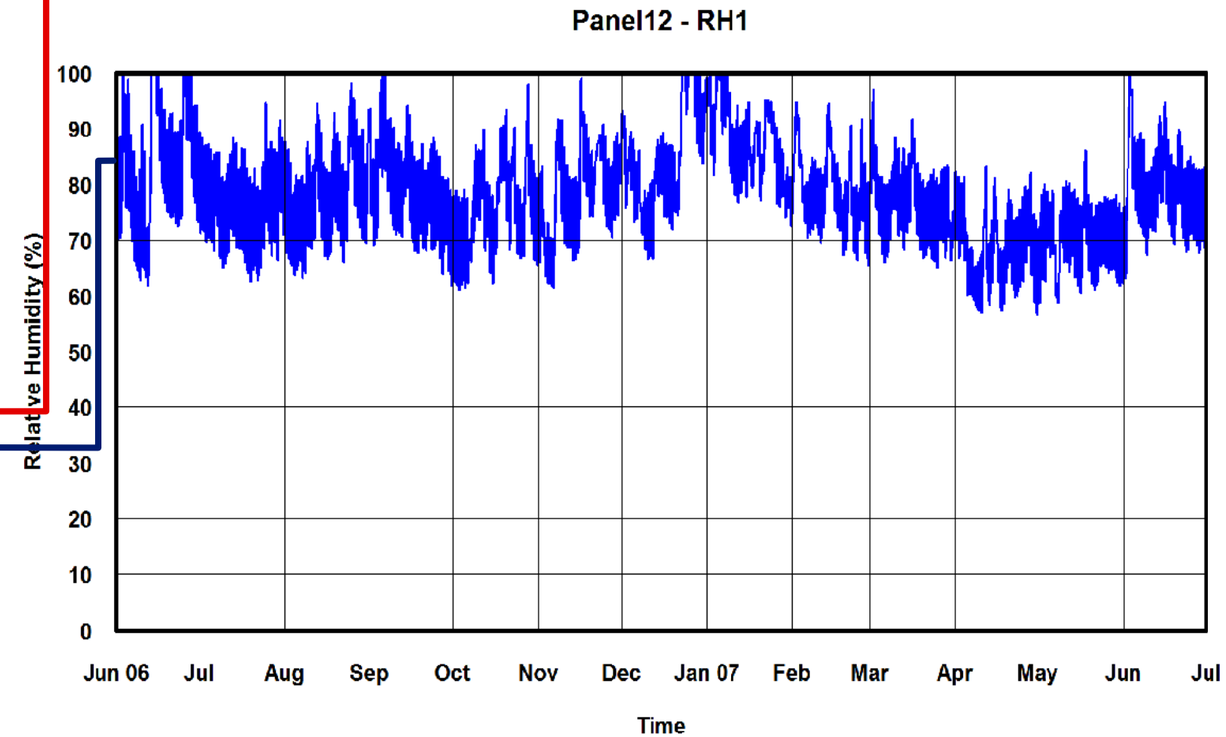
Panel12 - RH1
Relative Humidity (%)
100
90
80
70
60
50
40
30
20
10
0
Jun 06
Jul
Aug
Sep
Oct
Nov
Dec
Jan 07
Feb
Mar
Apr
May
Jun
Jul
Time

Panel 12

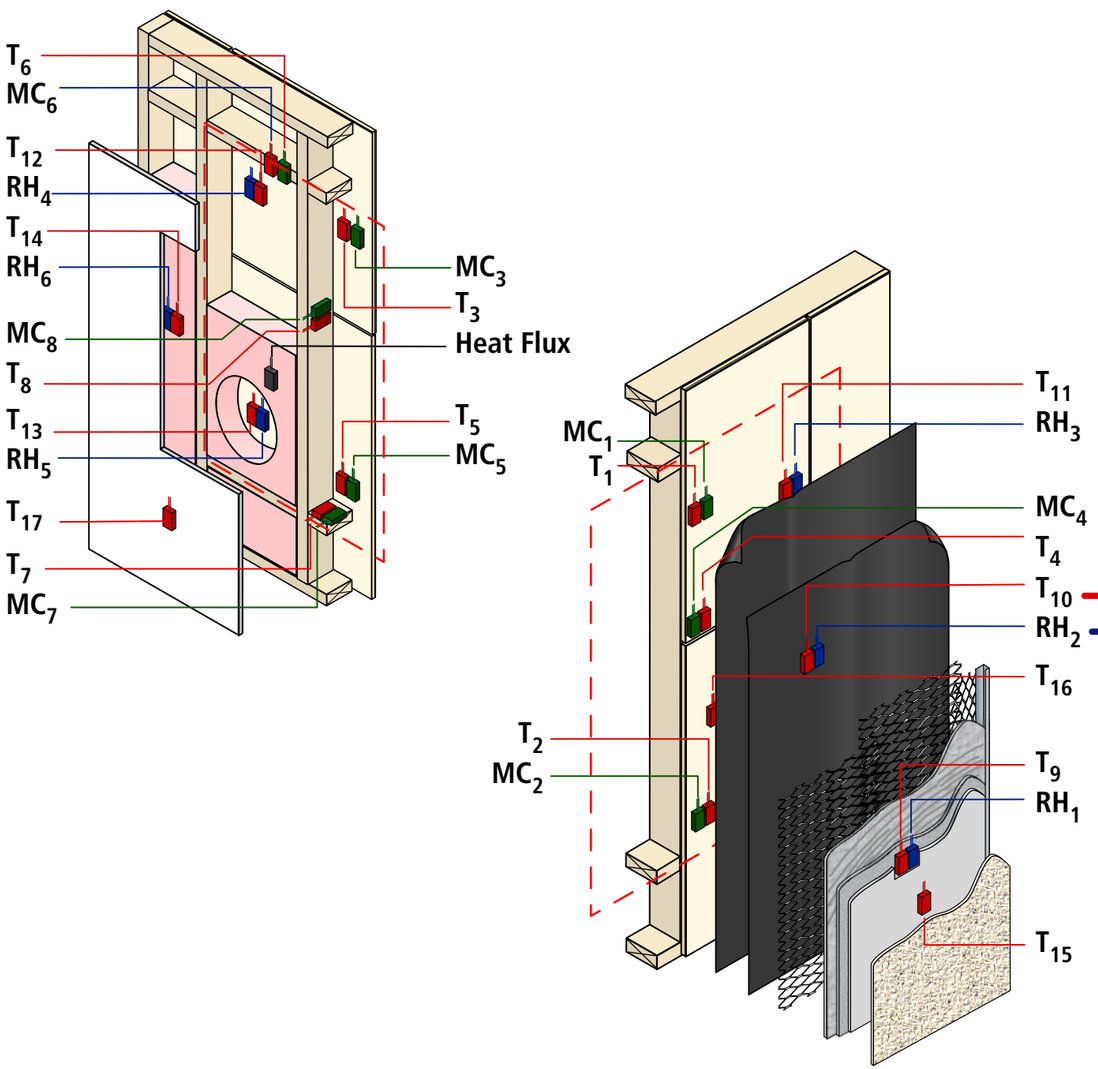
T_6
MC_6
T_{12}
RH_4
T_{14}
RH_6
MC_8
T_8
T_{13}
RH_5
T_{17}
T_7
MC_7
MC_3
T_3
Heat Flux
T_5
MC_5
MC_1
T_1
T_2
MC_2
T_{11}
RH_3
MC_4
T_4
T_{10}
RH_2
T_{16}
T_9
RH_1
T_{15}

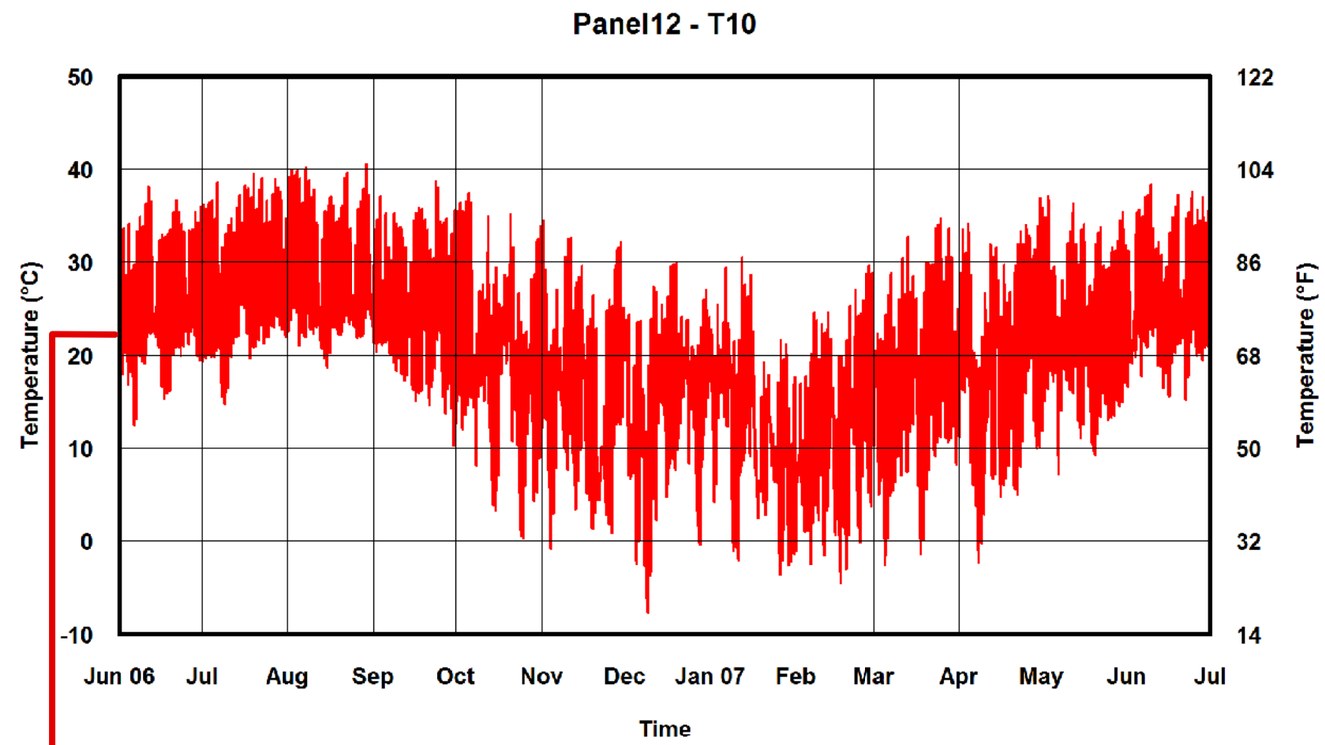
Panel12 - T10
Temperature (°C)
Temperature (°F)
50
40
30
20
10
0
-10
122
104
86
68
50
32
14
Jun 06
Jul
Aug
Sep
Oct
Nov
Dec
Jan 07
Feb
Mar
Apr
May
Jun
Jul
Time

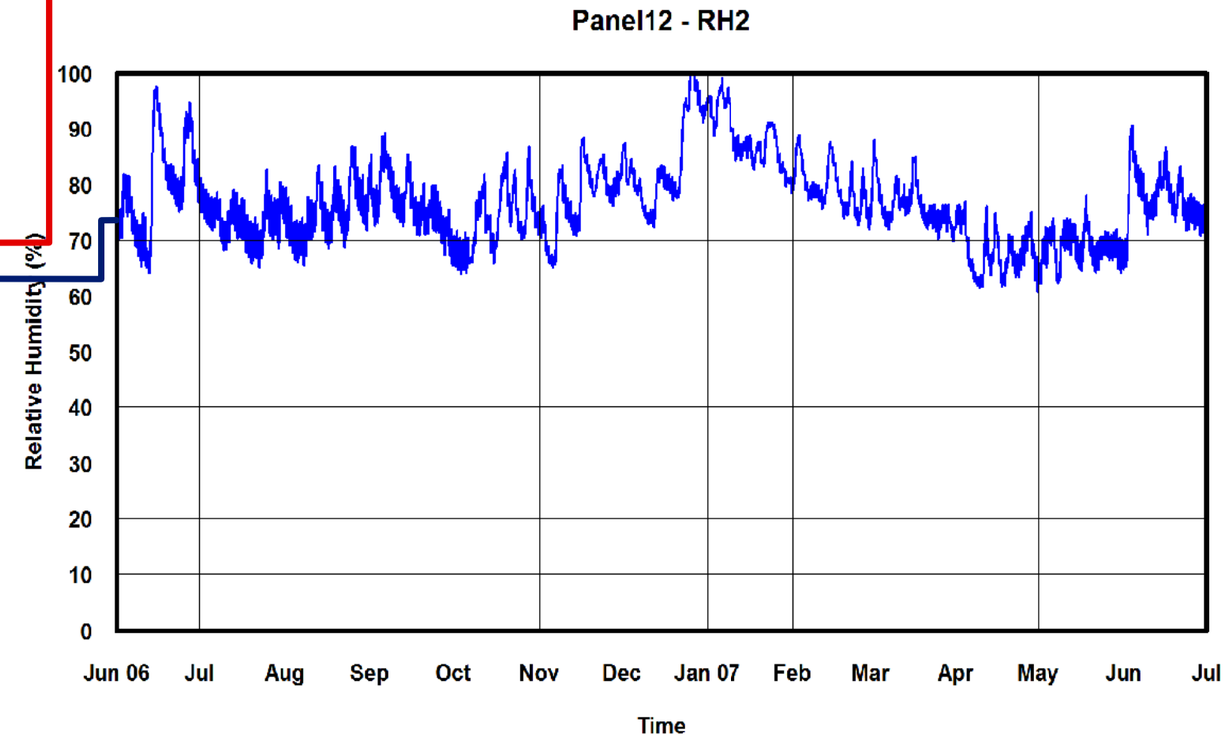
Panel12 - RH2
Relative Humidity (%)
100
90
80
70
60
50
40
30
20
10
0
Jun 06
Jul
Aug
Sep
Oct
Nov
Dec
Jan 07
Feb
Mar
Apr
May
Jun
Jul
Time

Panel 12

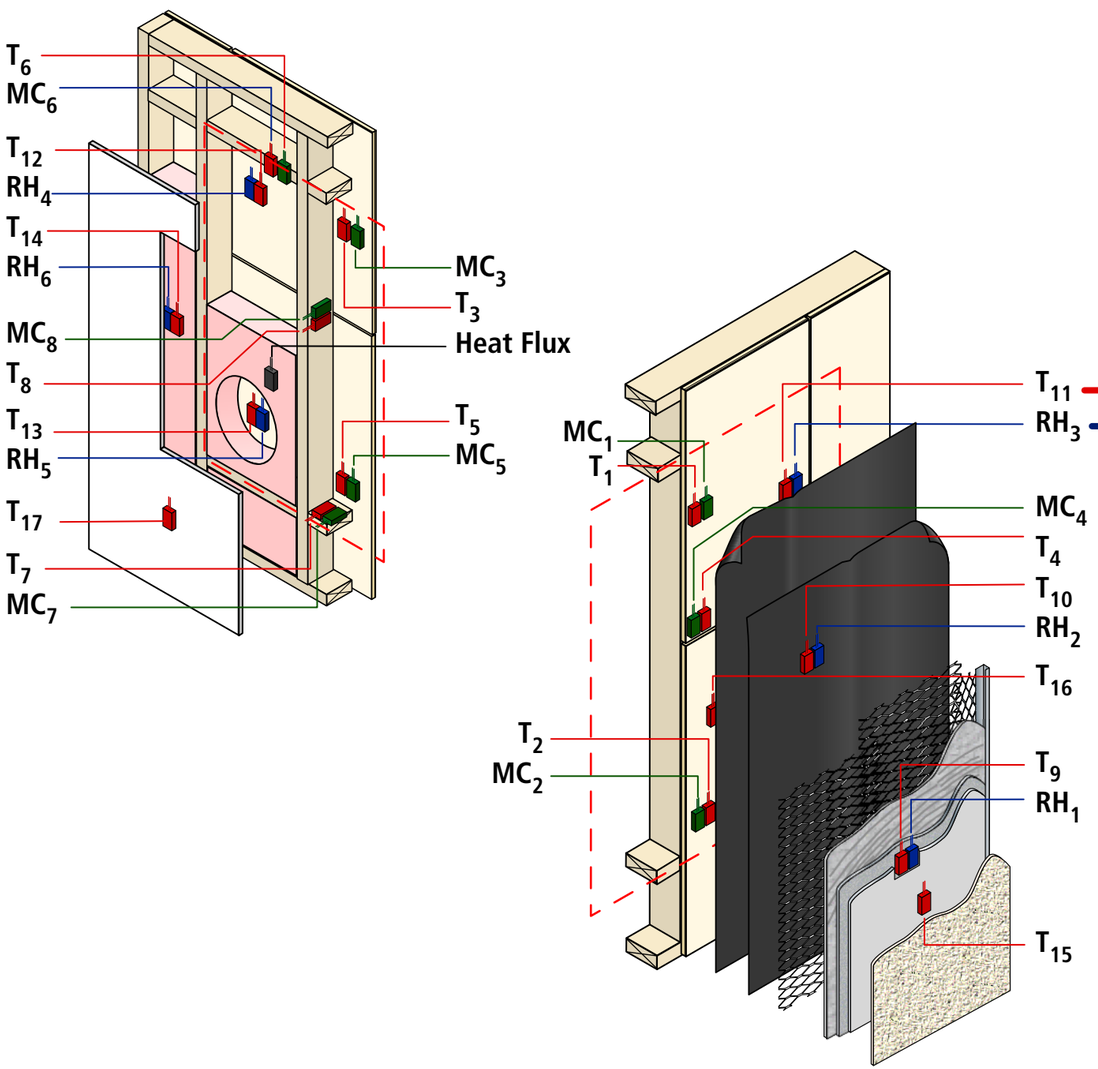
T_6
MC_6
T_{12}
RH_4
T_{14}
RH_6
MC_8
T_8
T_{13}
RH_5
T_{17}
T_7
MC_7
MC_3
T_3
Heat Flux
T_5
MC_5
MC_1
T_1
T_2
MC_2
T_{11}
RH_3
MC_4
T_4
T_{10}
RH_2
T_{16}
T_9
RH_1
T_{15}

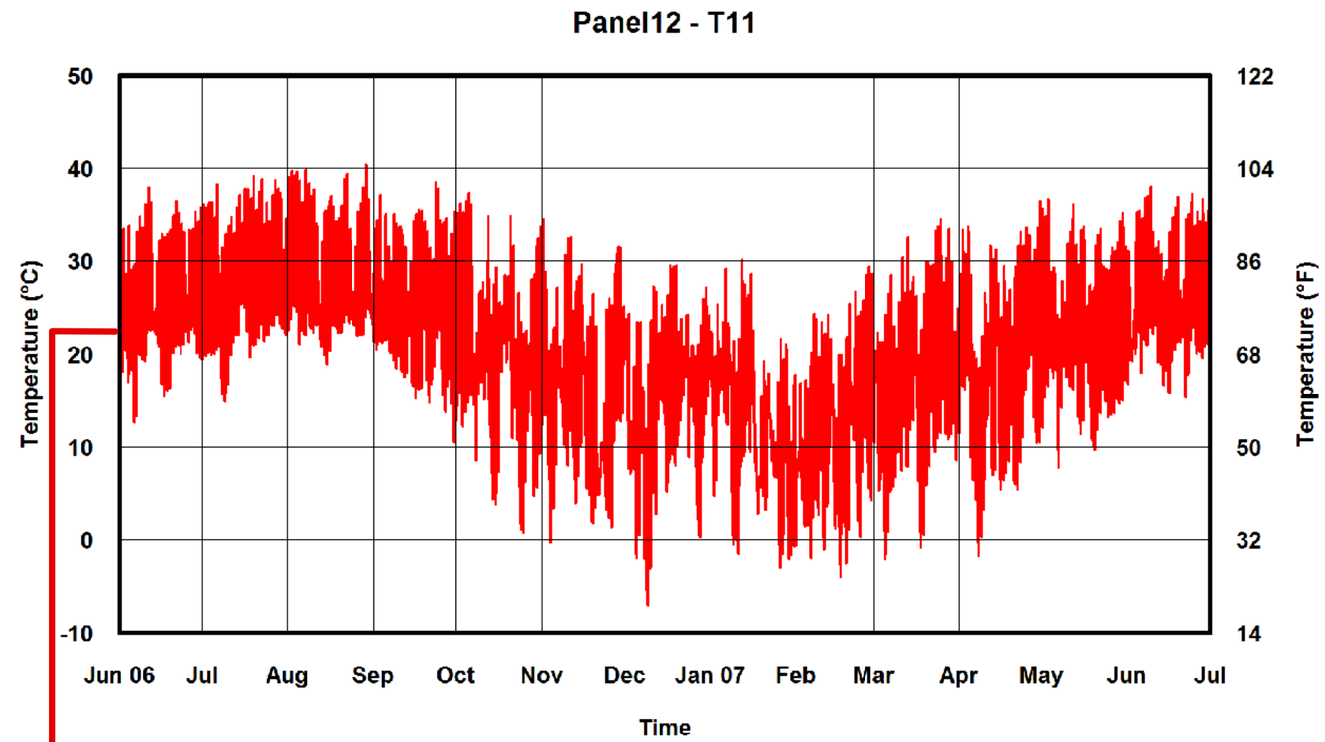
Panel12 - T11
Temperature (°C)
Temperature (°F)
50
40
30
20
10
0
-10
122
104
86
68
50
32
14
Jun 06
Jul
Aug
Sep
Oct
Nov
Dec
Jan 07
Feb
Mar
Apr
May
Jun
Jul
Time

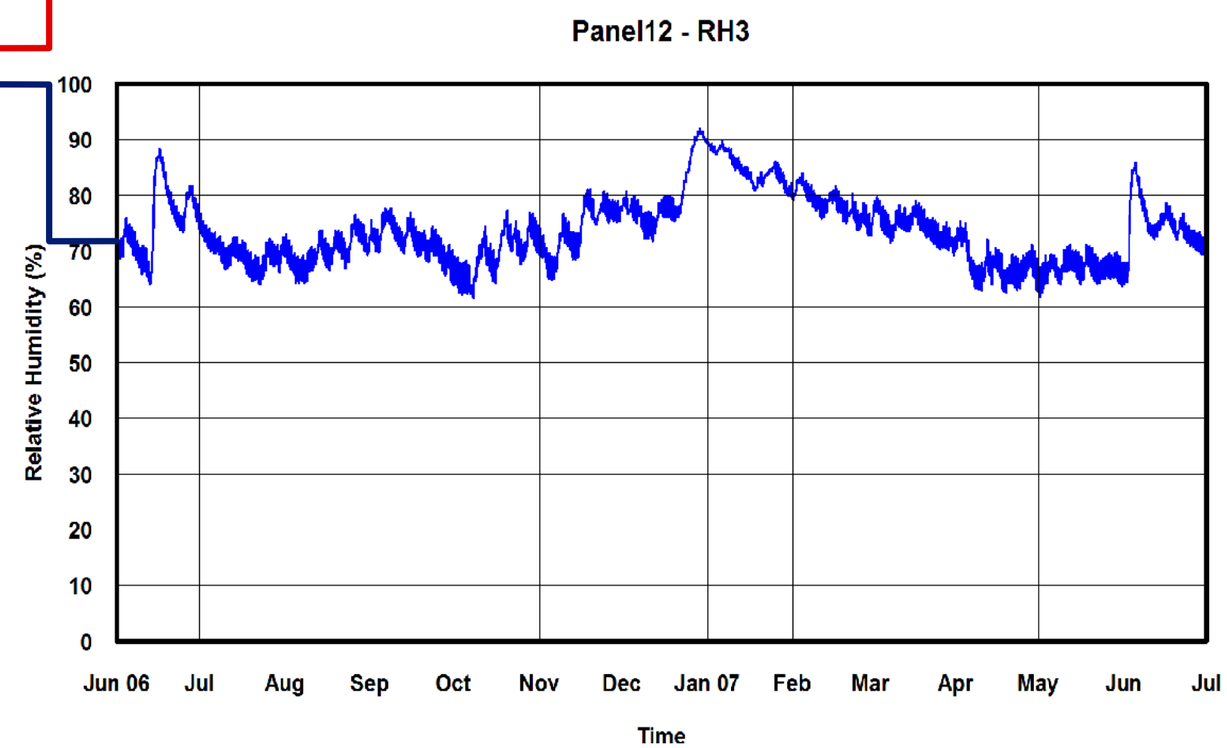
Panel12 - RH3
Relative Humidity (%)
100
90
80
70
60
50
40
30
20
10
0
Jun 06
Jul
Aug
Sep
Oct
Nov
Dec
Jan 07
Feb
Mar
Apr
May
Jun
Jul
Time

Panel 12

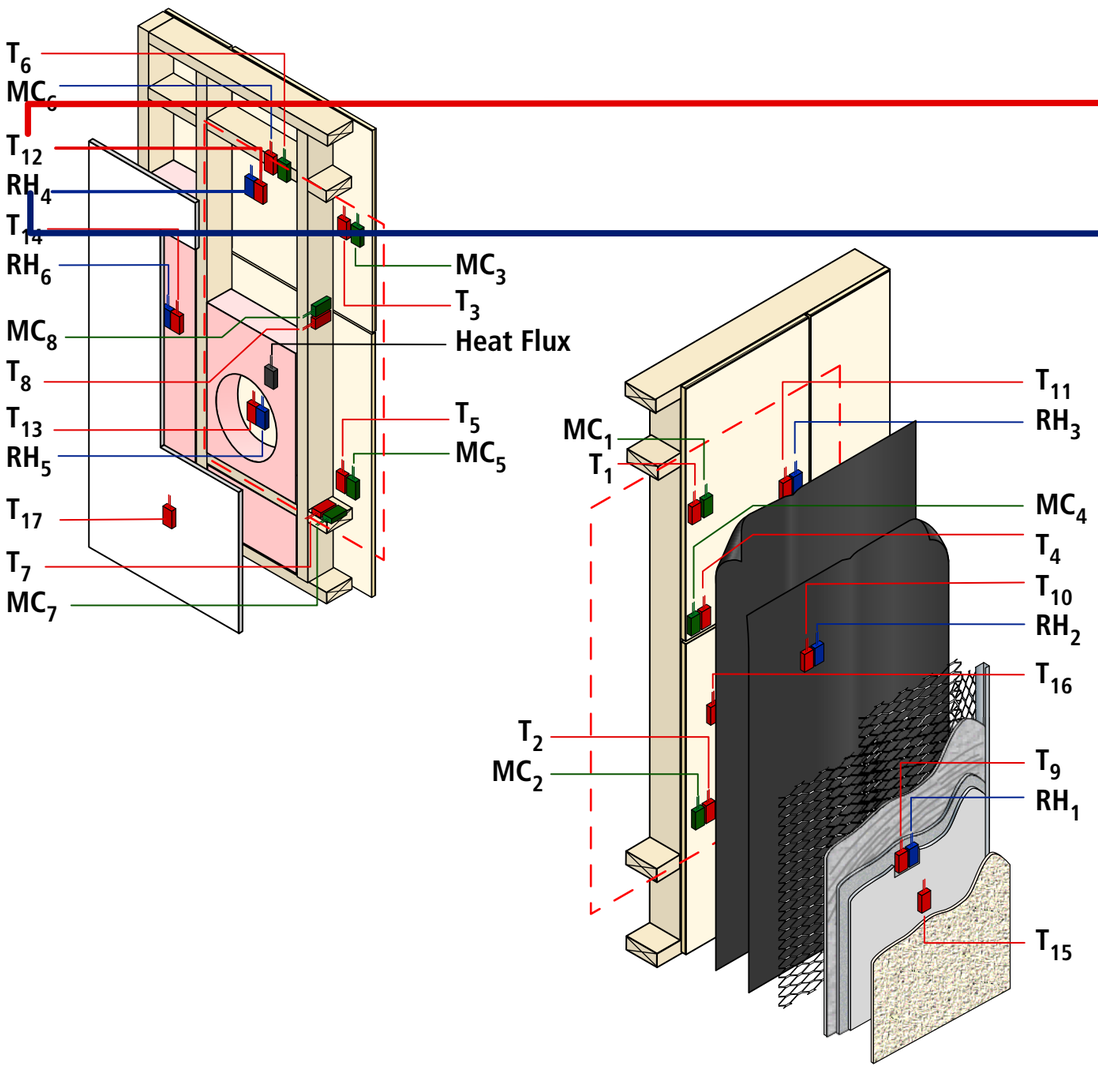
T_6
MC_6
T_{12}
RH_4
T_{14}
RH_6
MC_8
T_8
T_{13}
RH_5
T_{17}
T_7
MC_7
MC_3
T_3
Heat Flux
T_5
MC_5
MC_1
T_1
T_{11}
RH_3
MC_4
T_4
T_{10}
RH_2
T_{16}
T_2
MC_2
T_9
RH_1
T_{15}

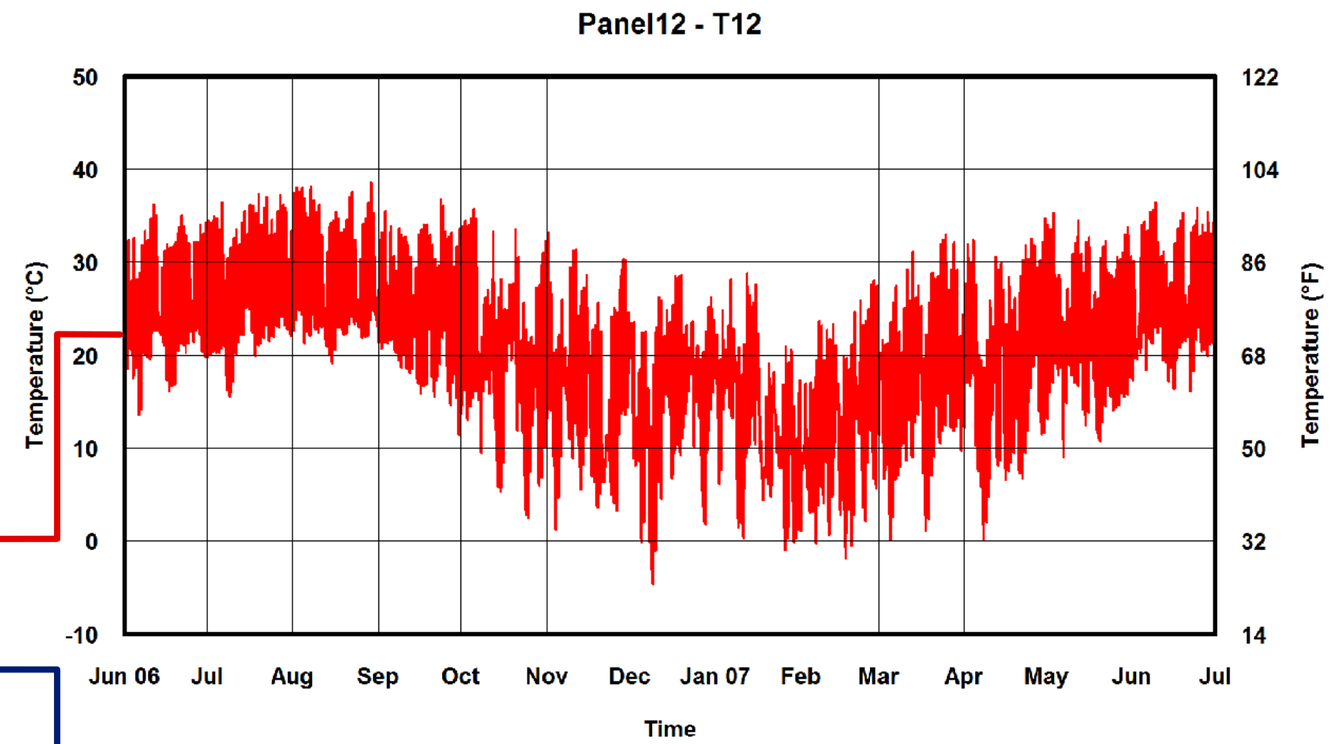
Panel12 - T12
Temperature (°C)
50
40
30
20
10
0
-10
Temperature (°F)
122
104
86
68
50
32
14
Jun 06
Jul
Aug
Sep
Oct
Nov
Dec
Jan 07
Feb
Mar
Apr
May
Jun
Jul
Time

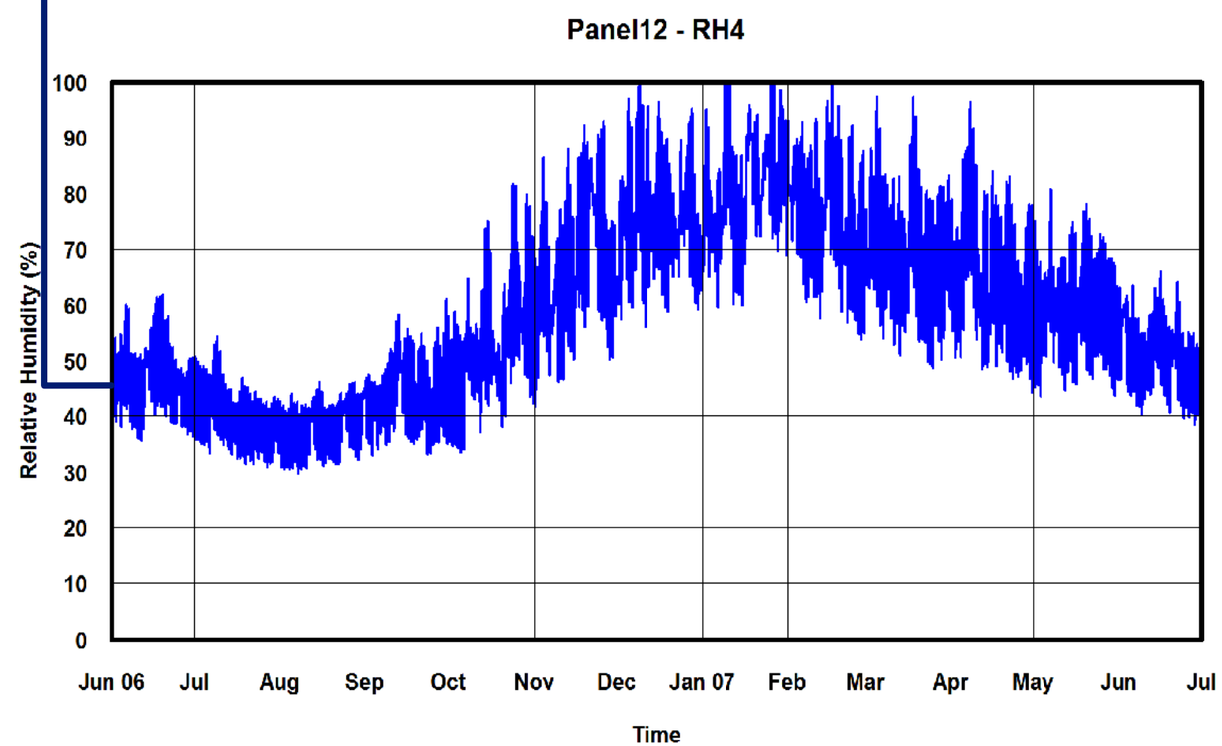
Panel12 - RH4
Relative Humidity (%)
100
90
80
70
60
50
40
30
20
10
0
Jun 06
Jul
Aug
Sep
Oct
Nov
Dec
Jan 07
Feb
Mar
Apr
May
Jun
Jul
Time

Panel 12

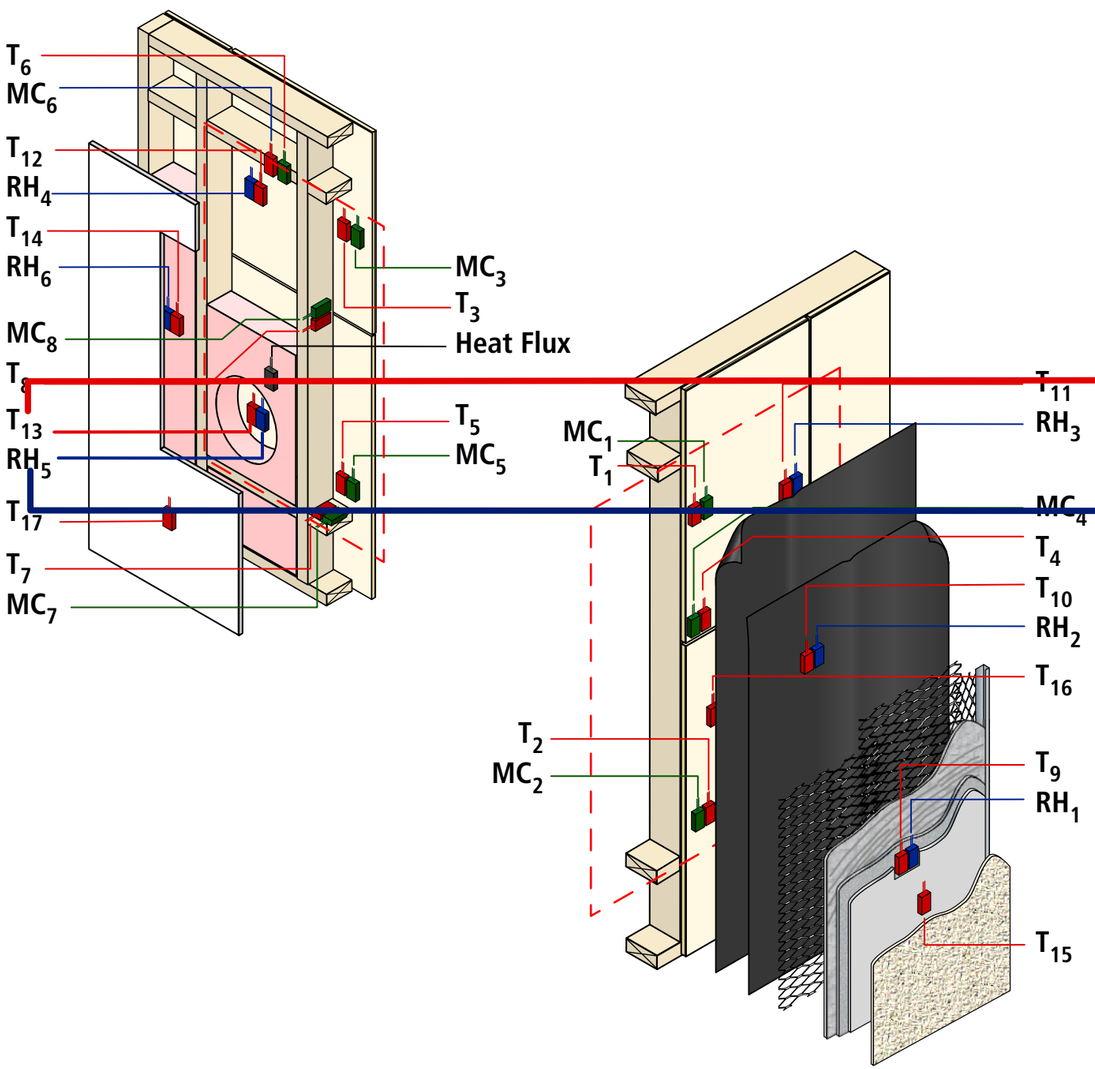
T_6
MC_6
T_{12}
RH_4
T_{14}
RH_6
MC_8
T_8
T_{13}
RH_5
T_{17}
T_7
MC_7
MC_3
T_3
Heat Flux
T_5
MC_5
MC_1
T_1
T_2
MC_2
T_{11}
RH_3
MC_4
T_4
T_{10}
RH_2
T_{16}
T_9
RH_1
T_{15}

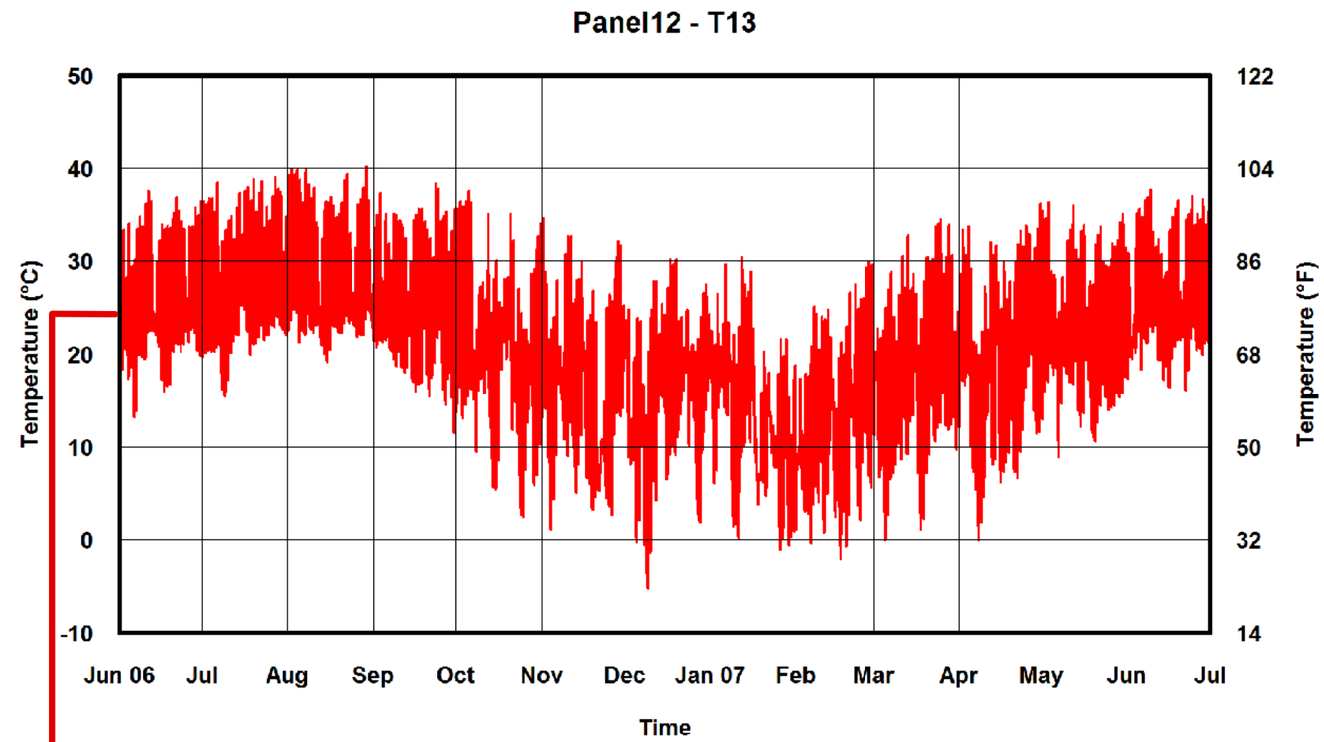
Panel12 - T13
Temperature (°C)
Temperature (°F)
50
40
30
20
10
0
-10
122
104
86
68
50
32
14
Jun 06
Jul
Aug
Sep
Oct
Nov
Dec
Jan 07
Feb
Mar
Apr
May
Jun
Jul
Time

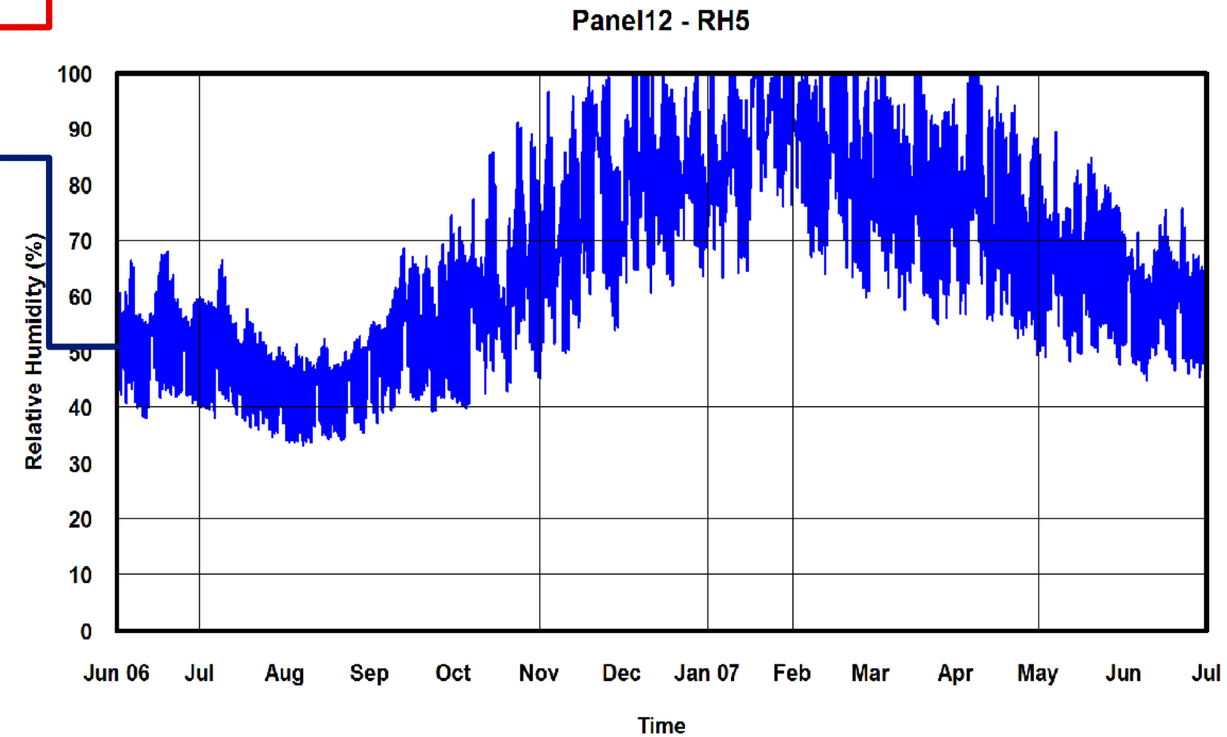
Panel12 - RH5
Relative Humidity (%)
100
90
80
70
60
50
40
30
20
10
0
Jun 06
Jul
Aug
Sep
Oct
Nov
Dec
Jan 07
Feb
Mar
Apr
May
Jun
Jul
Time

Panel 12

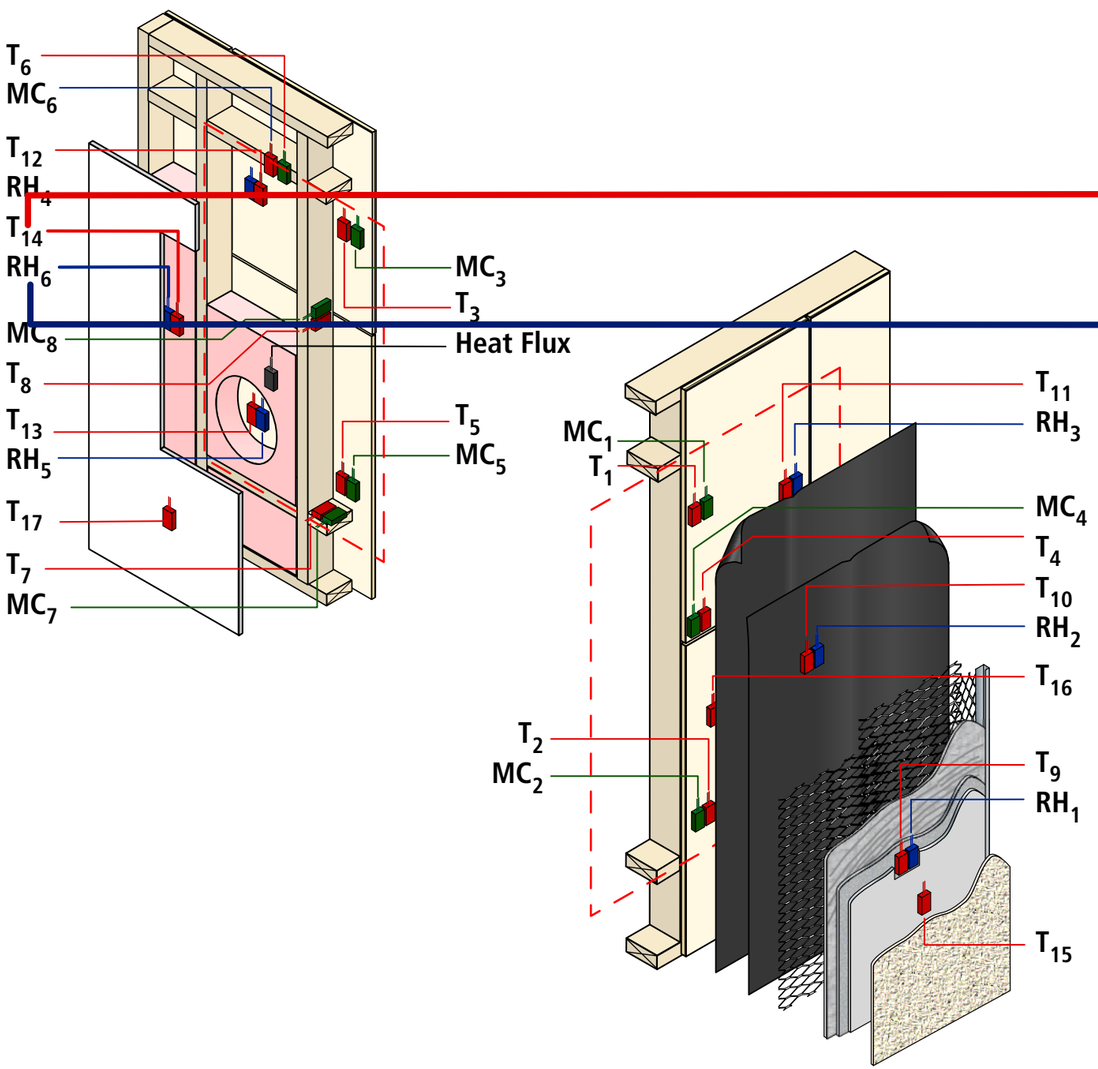
T_6
MC_6
T_{12}
RH_4
T_{14}
RH_6
MC_8
T_8
T_{13}
RH_5
T_{17}
T_7
MC_7
MC_3
T_3
Heat Flux
T_5
MC_5
MC_1
T_1
T_{11}
RH_3
MC_4
T_4
T_{10}
RH_2
T_{16}
T_2
MC_2
T_9
RH_1
T_{15}

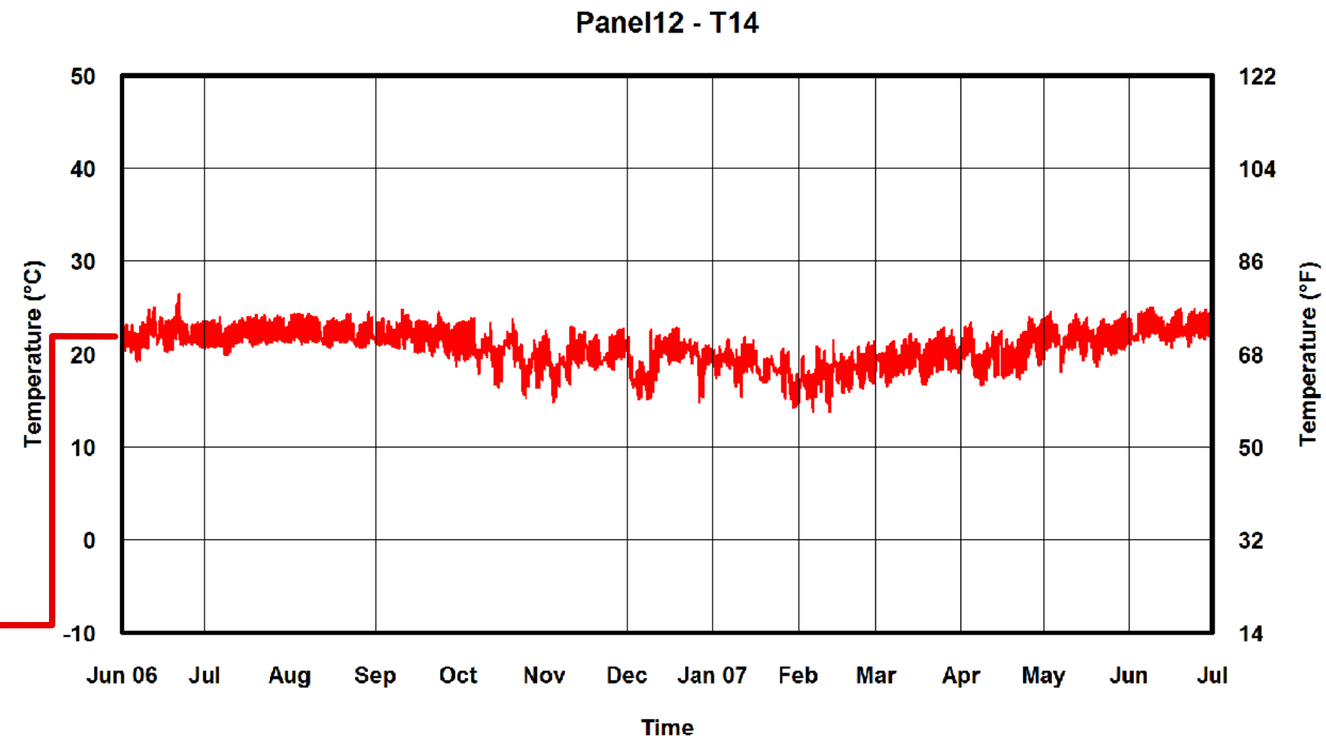
Panel12 - T14
Temperature (°C)
50
40
30
20
10
0
-10
Temperature (°F)
122
104
86
68
50
32
14
Jun 06
Jul
Aug
Sep
Oct
Nov
Dec
Jan 07
Feb
Mar
Apr
May
Jun
Jul
Time

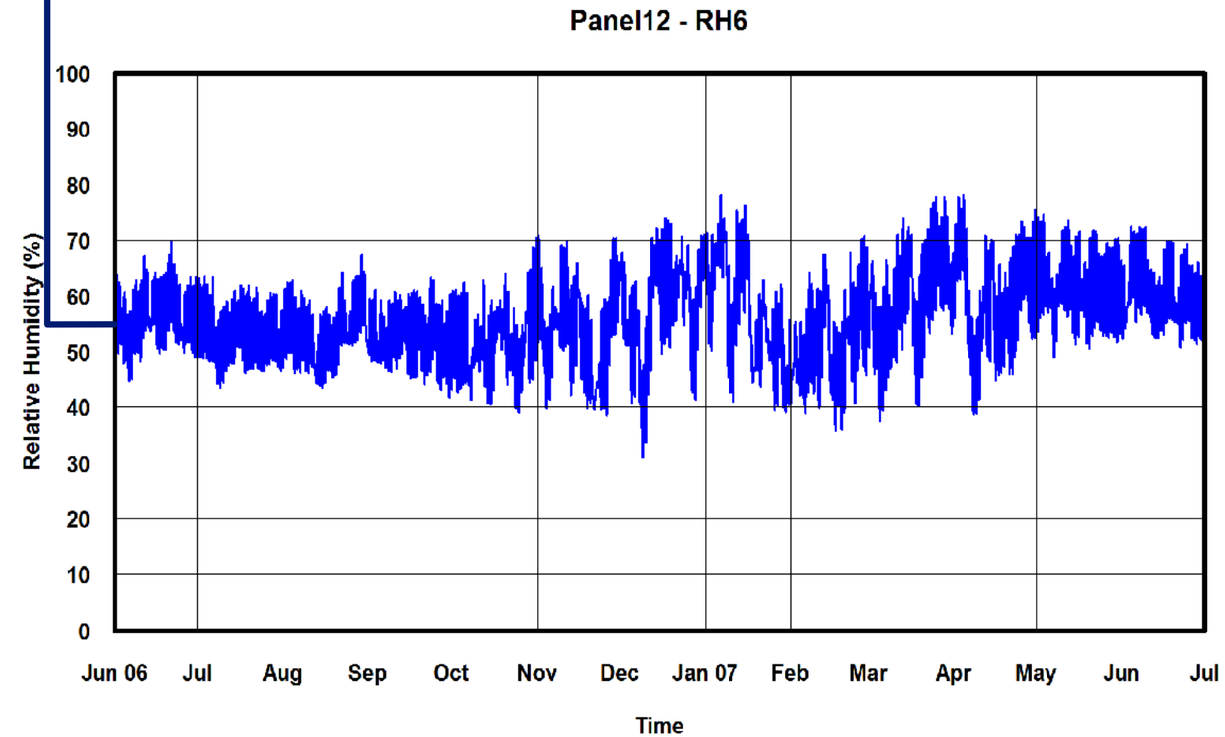
Panel12 - RH6
Relative Humidity (%)
100
90
80
70
60
50
40
30
20
10
0
Jun 06
Jul
Aug
Sep
Oct
Nov
Dec
Jan 07
Feb
Mar
Apr
May
Jun
Jul
Time

Panel 12

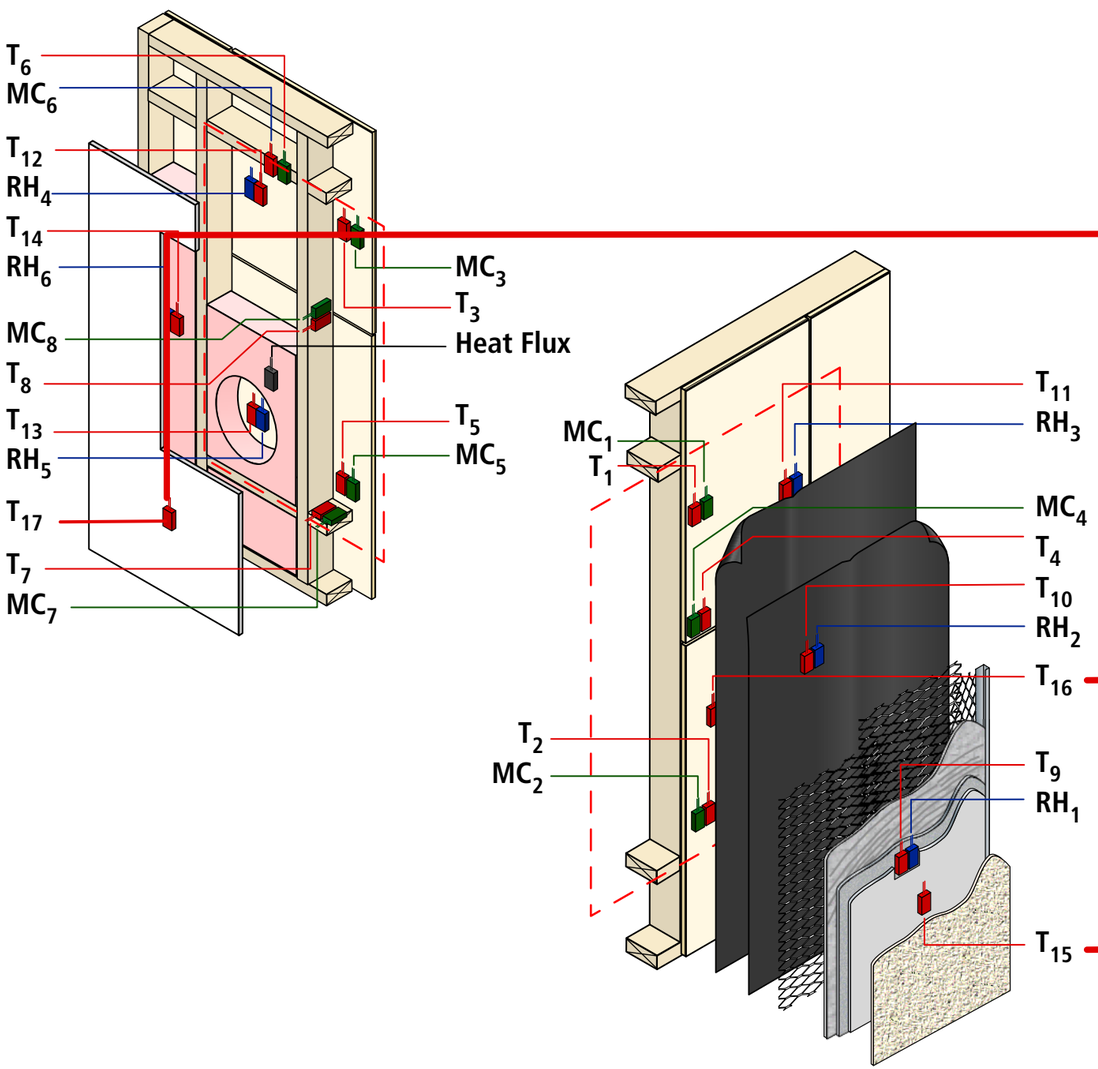
T_6
MC_6
T_{12}
RH_4
T_{14}
RH_6
MC_8
T_8
T_{13}
RH_5
T_{17}
T_7
MC_7
MC_3
T_3
Heat Flux
T_5
MC_5
MC_1
T_1
T_2
MC_2
T_{11}
RH_3
MC_4
T_4
T_{10}
RH_2
T_{16}
T_9
RH_1
T_{15}

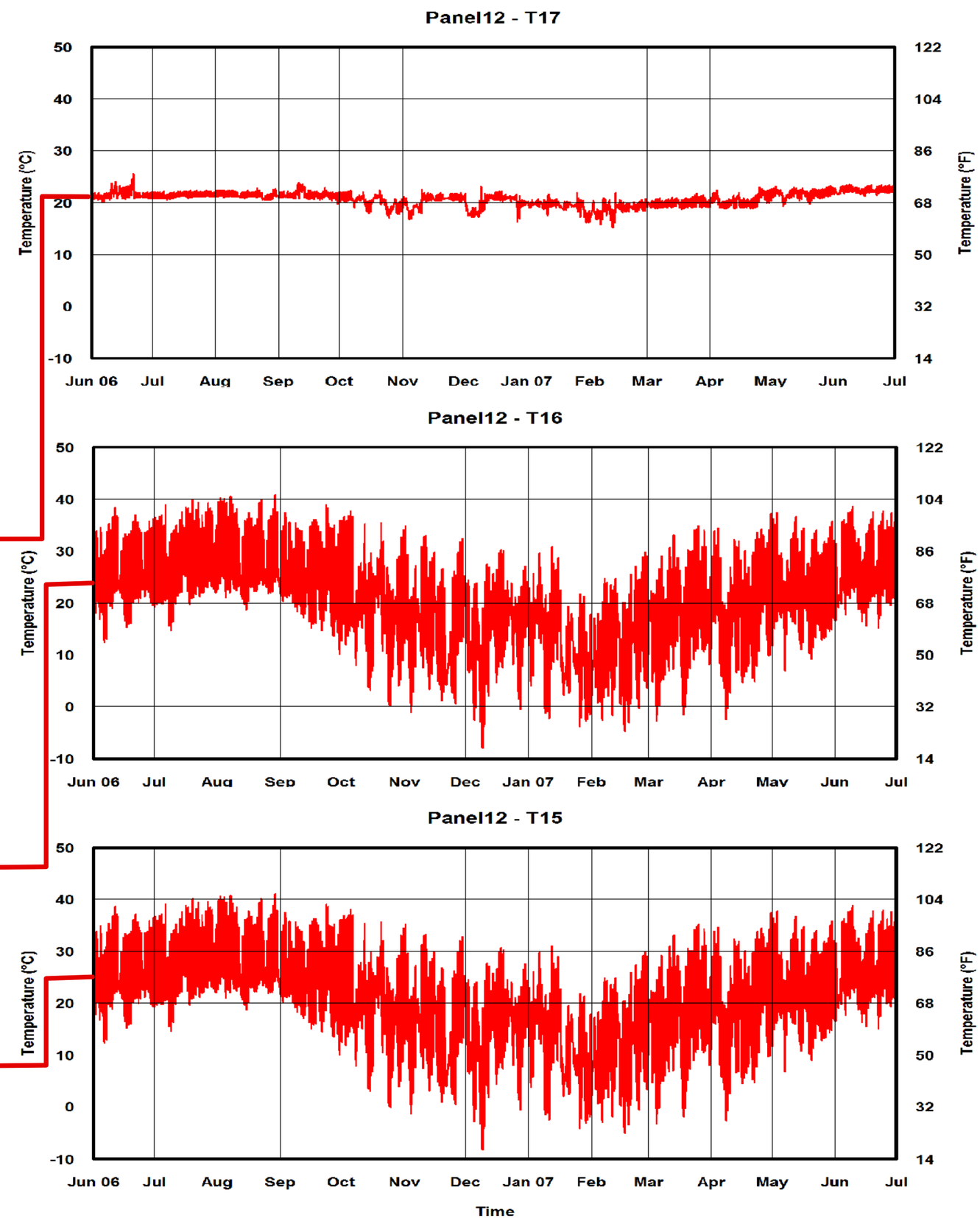
Panel12 - T17
Panel12 - T16
Panel12 - T15
Temperature (°C)
Temperature (°F)
50
40
30
20
10
0
-10
122
104
86
68
50
32
14
Jun 06
Jul
Aug
Sep
Oct
Nov
Dec
Jan 07
Feb
Mar
Apr
May
Jun
Jul
Time

Panel 12

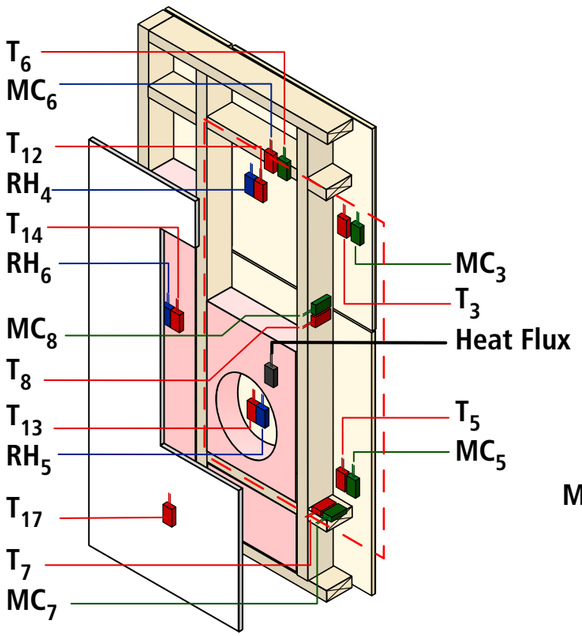
T_6
MC_6
T_{12}
RH_4
T_{14}
RH_6
MC_8
T_8
T_{13}
RH_5
T_{17}
T_7
MC_7
MC_3
T_3
Heat Flux
T_5
MC_5

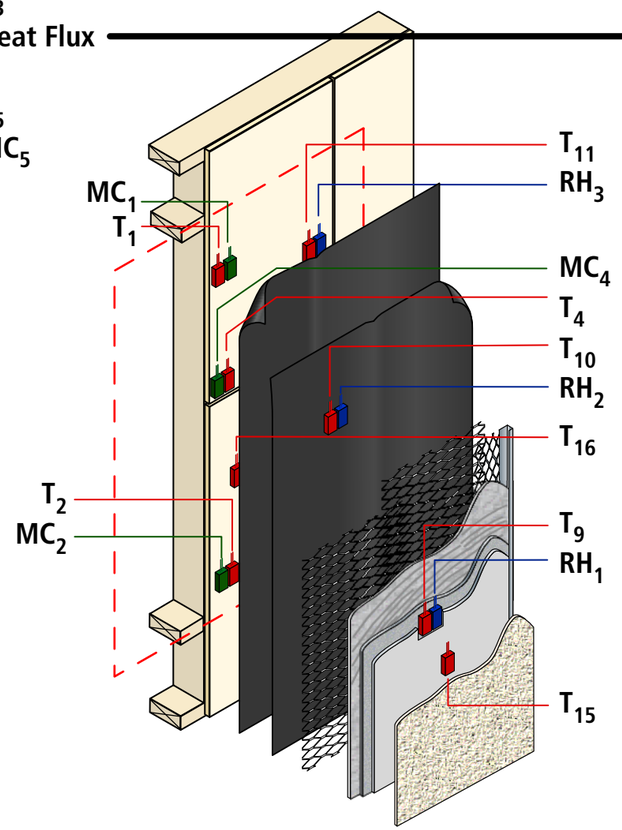
MC_1
T_1
T_2
MC_2
T_{11}
RH_3
MC_4
T_4
T_{10}
RH_2
T_{16}
T_9
RH_1
T_{15}

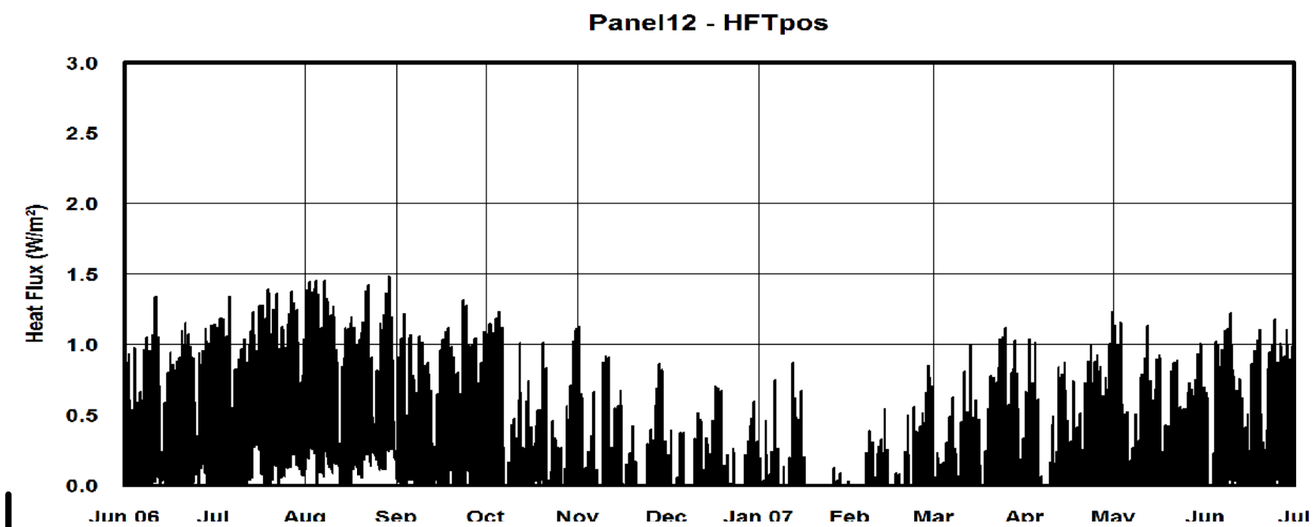
Panel12 - HFTpos
Heat Flux (W/m²)
3.0
2.5
2.0
1.5
1.0
0.5
0.0
Jun 06
Jul
Aug
Sep
Oct
Nov
Dec
Jan 07
Feb
Mar
Apr
May
Jun
Jul

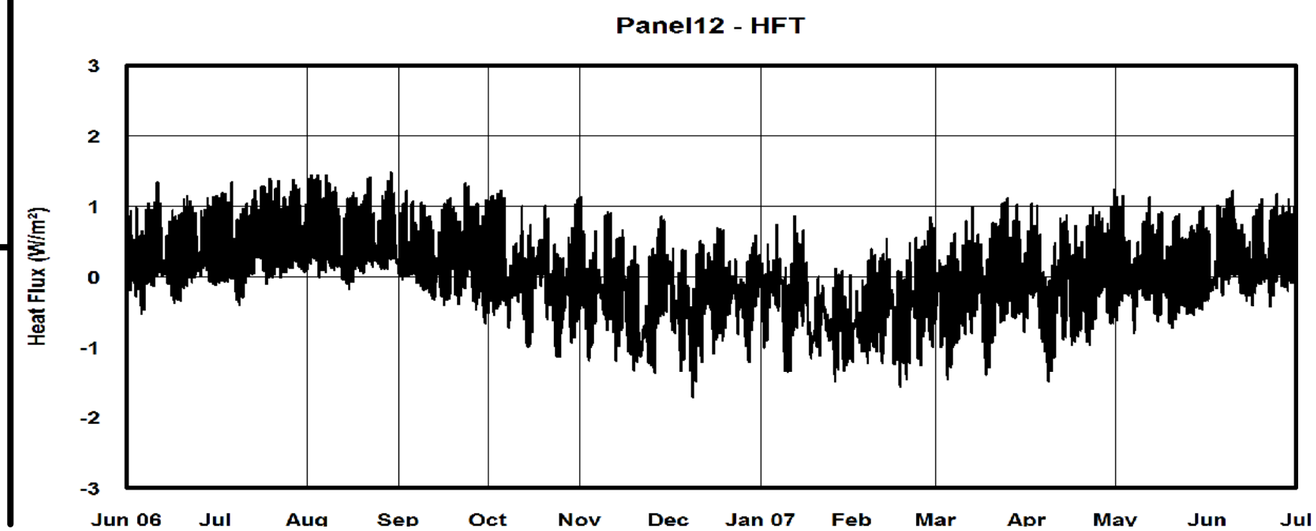
Panel12 - HFT
Heat Flux (W/m²)
3
2
1
0
-1
-2
-3
Jun 06
Jul
Aug
Sep
Oct
Nov
Dec
Jan 07
Feb
Mar
Apr
May
Jun
Jul

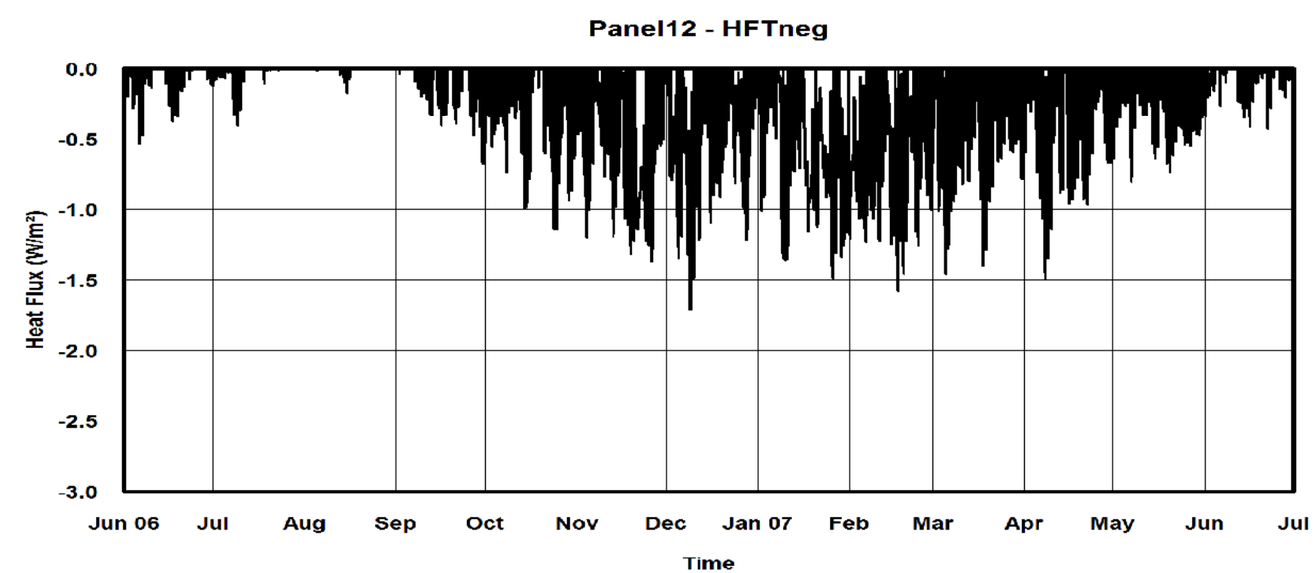
Panel12 - HFTneg
Heat Flux (W/m²)
0.0
-0.5
-1.0
-1.5
-2.0
-2.5
-3.0
Jun 06
Jul
Aug
Sep
Oct
Nov
Dec
Jan 07
Feb
Mar
Apr
May
Jun
Jul
Time

Panel 14

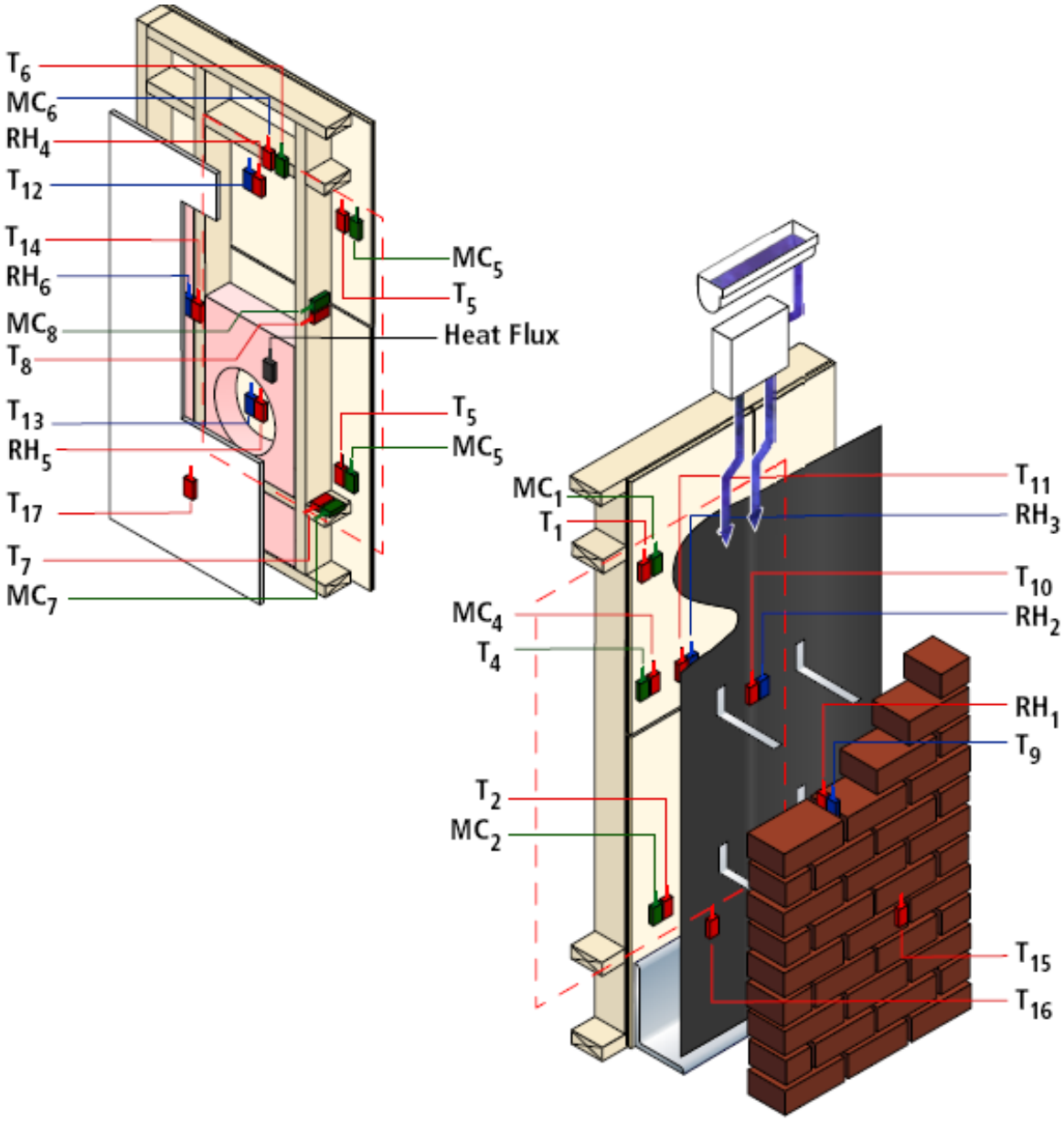
T6
MC6
RH4
T12
T14
RH6
MC8
T8
T13
RH5
T17
T7
MC7
MC5
T5
Heat Flux
T5
MC5
MC1
T1
MC4
T4
T2
MC2
T11
RH3
T10
RH2
RH1
T9
T15
T16

Panel 14

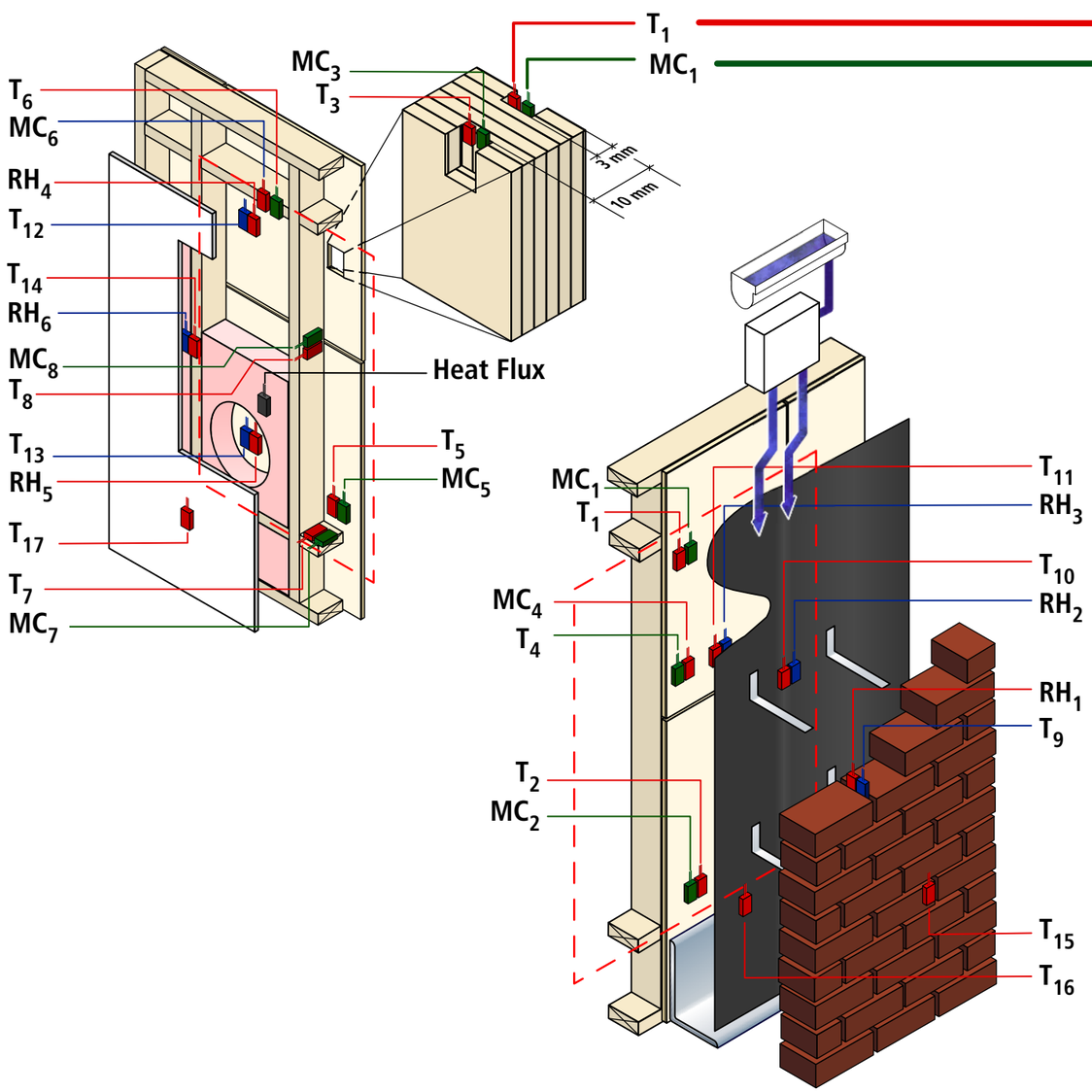
T_1
MC_1
MC_3
T_3
T_6
MC_6
RH_4
T_{12}
T_{14}
RH_6
MC_8
T_8
T_{13}
RH_5
T_{17}
T_7
MC_7
3 mm
10 mm
Heat Flux
T_5
MC_5
MC_1
T_1
MC_4
T_4
T_2
MC_2
T_{11}
RH_3
T_{10}
RH_2
RH_1
T_9
T_{15}
T_{16}

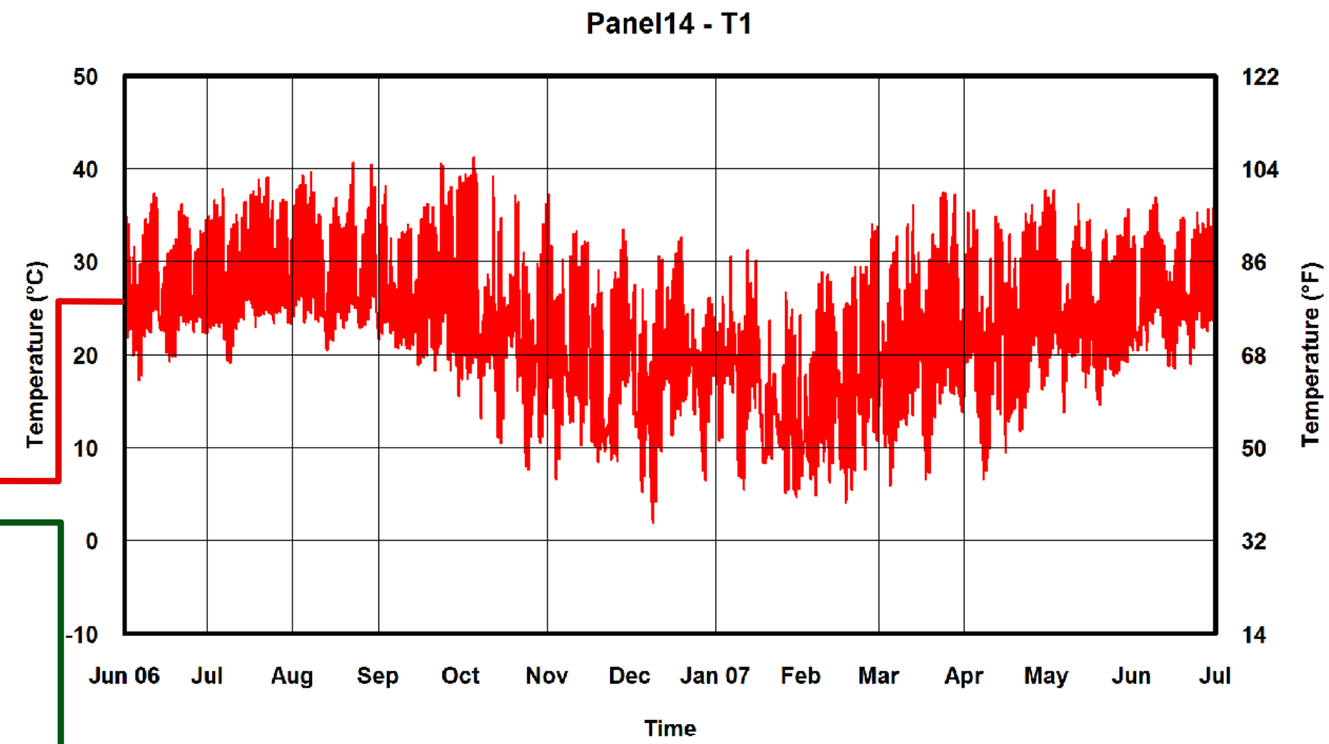
Panel14 - T1
Temperature (°C)
Temperature (°F)
50
40
30
20
10
0
-10
122
104
86
68
50
32
14
Jun 06
Jul
Aug
Sep
Oct
Nov
Dec
Jan 07
Feb
Mar
Apr
May
Jun
Jul
Time

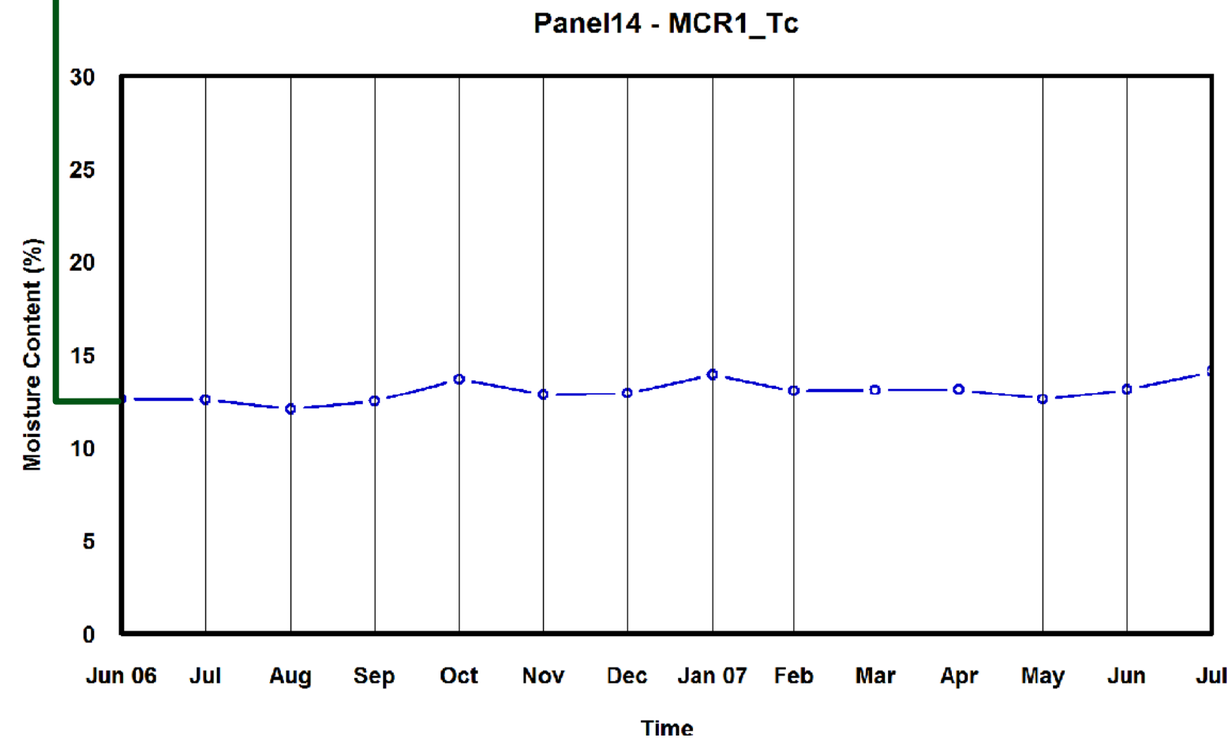
Panel14 - MCR1_Tc
Moisture Content (%)
30
25
20
15
10
5
0
Jun 06
Jul
Aug
Sep
Oct
Nov
Dec
Jan 07
Feb
Mar
Apr
May
Jun
Jul
Time

Panel 14

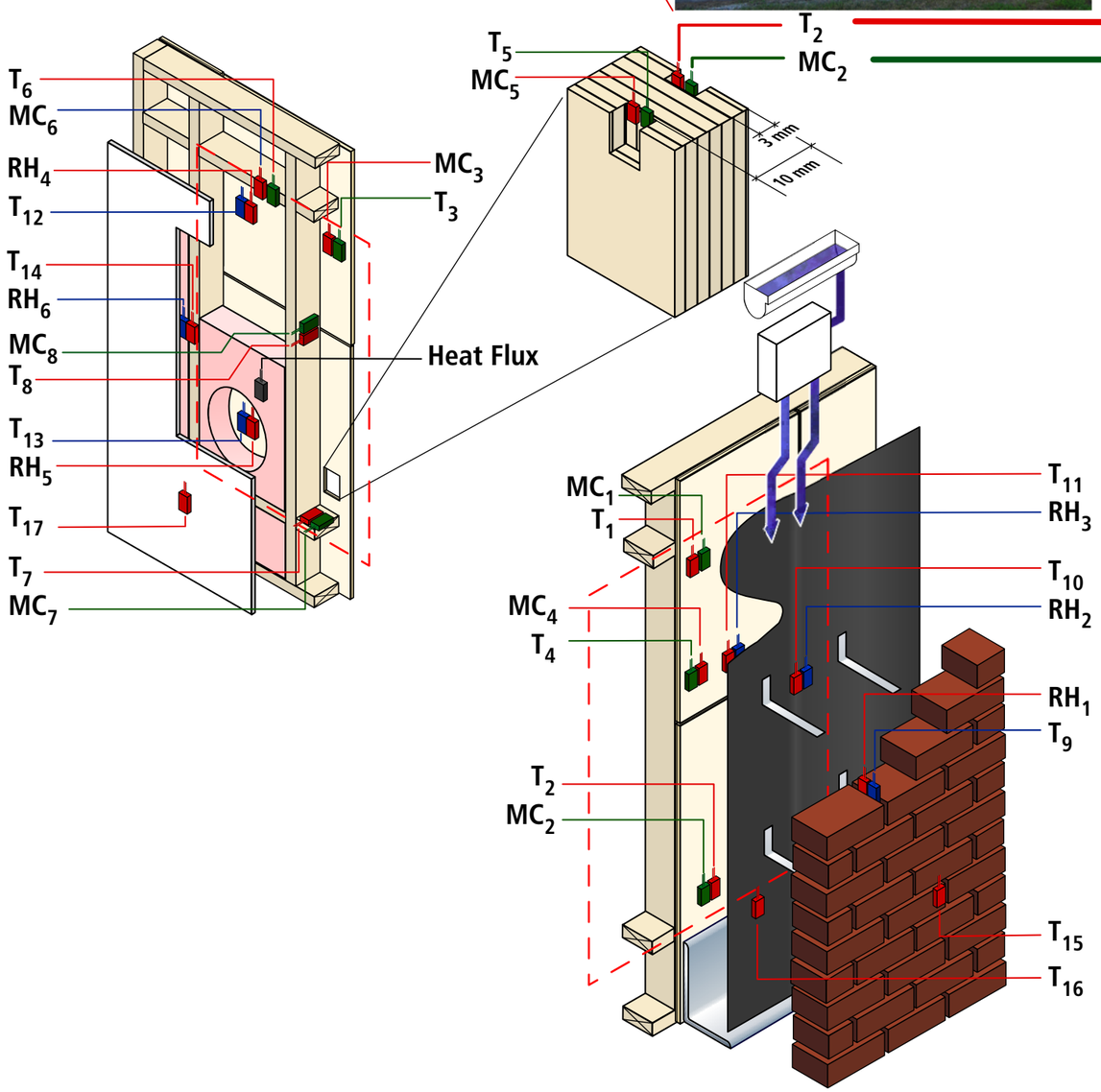
T_6
MC_6
RH_4
T_{12}
T_{14}
RH_6
MC_8
T_8
T_{13}
RH_5
T_{17}
T_7
MC_7
MC_3
T_3
Heat Flux
T_5
MC_5
T_2
MC_2
3 mm
10 mm
MC_1
T_1
MC_4
T_4
T_2
MC_2
T_{11}
RH_3
T_{10}
RH_2
RH_1
T_9
T_{15}
T_{16}

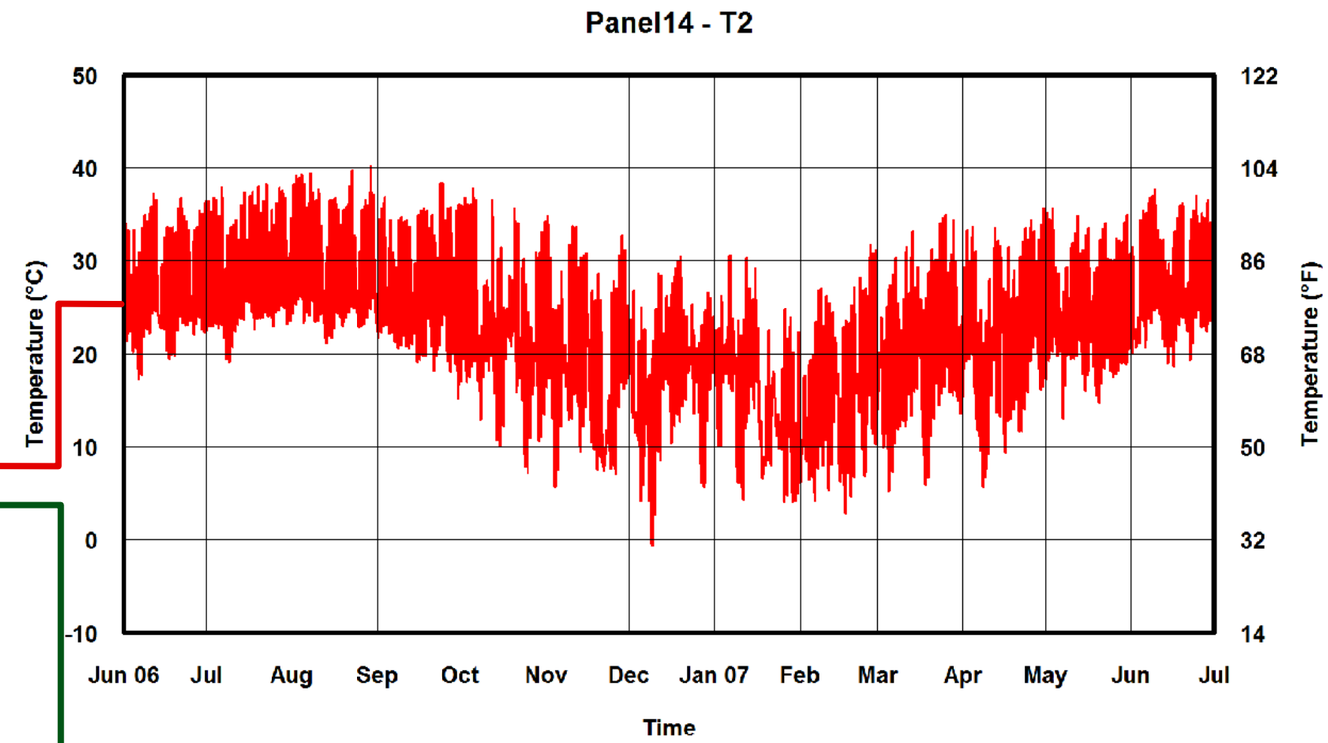
Panel14 - T2
Temperature (°C)
Temperature (°F)
50
40
30
20
10
0
-10
122
104
86
68
50
32
14
Jun 06
Jul
Aug
Sep
Oct
Nov
Dec
Jan 07
Feb
Mar
Apr
May
Jun
Jul
Time

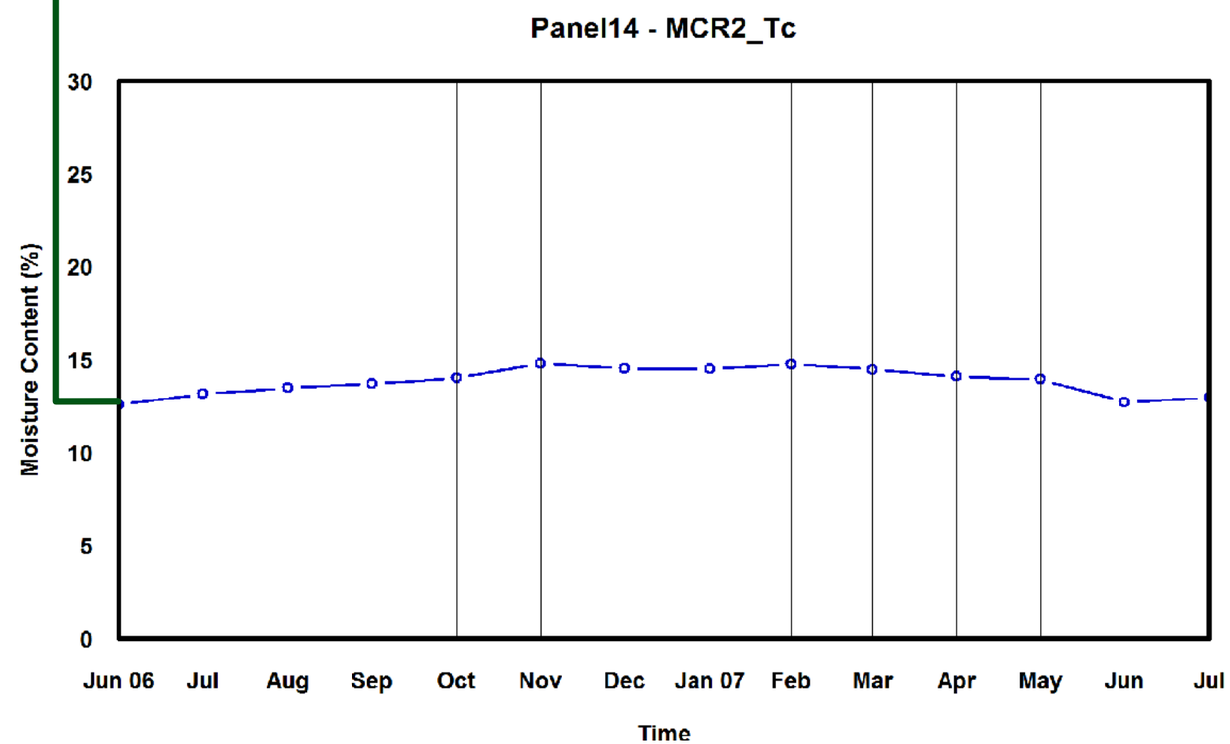
Panel14 - MCR2_Tc
Moisture Content (%)
30
25
20
15
10
5
0
Jun 06
Jul
Aug
Sep
Oct
Nov
Dec
Jan 07
Feb
Mar
Apr
May
Jun
Jul
Time

Panel 14

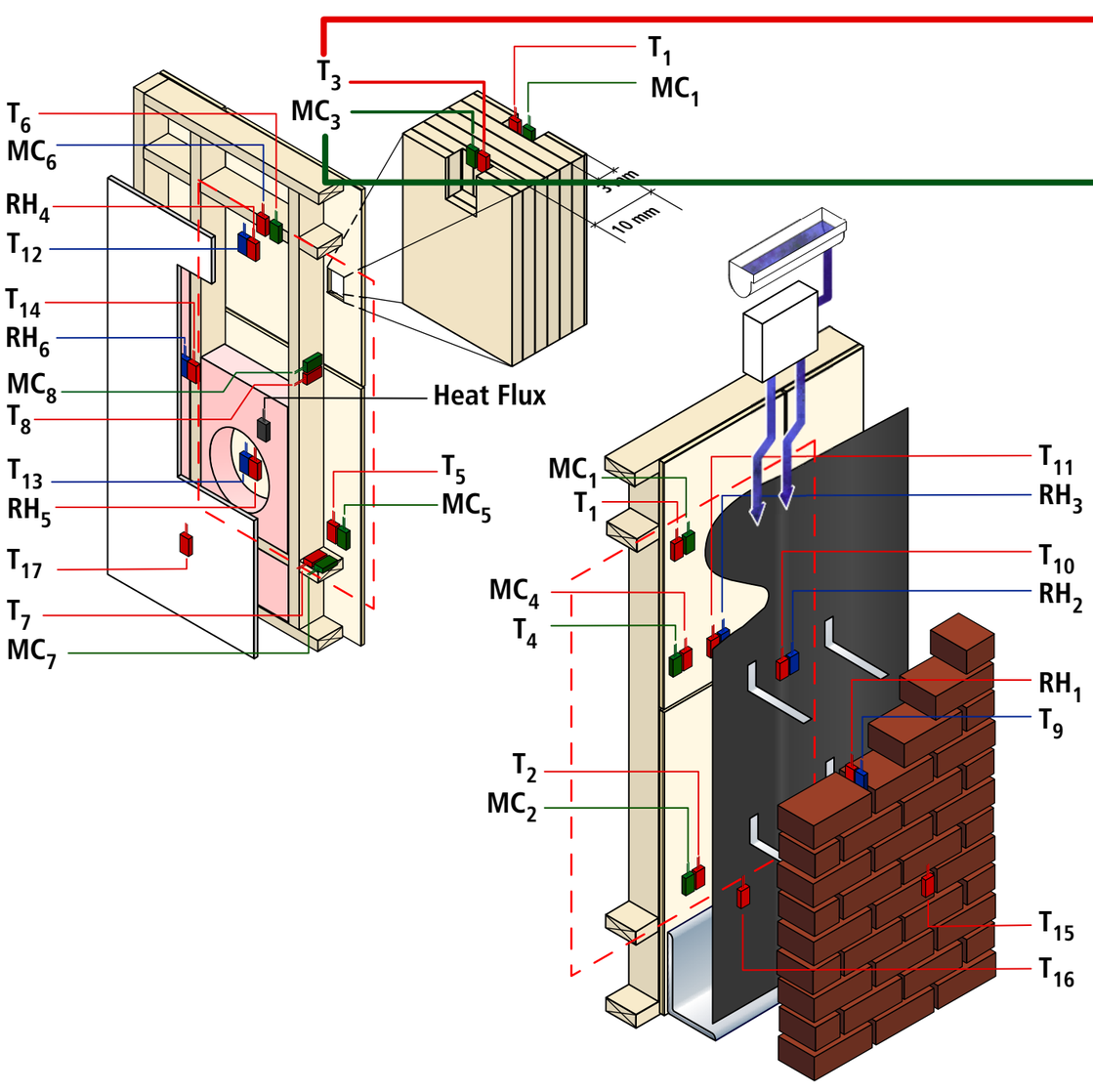
T_3
MC_3
T_1
MC_1
T_6
MC_6
RH_4
T_{12}
T_{14}
RH_6
MC_8
T_8
T_{13}
RH_5
T_{17}
T_7
MC_7
3 mm
10 mm
Heat Flux
T_5
MC_5
MC_1
T_1
MC_4
T_4
T_2
MC_2
T_{11}
RH_3
T_{10}
RH_2
RH_1
T_9
T_{15}
T_{16}

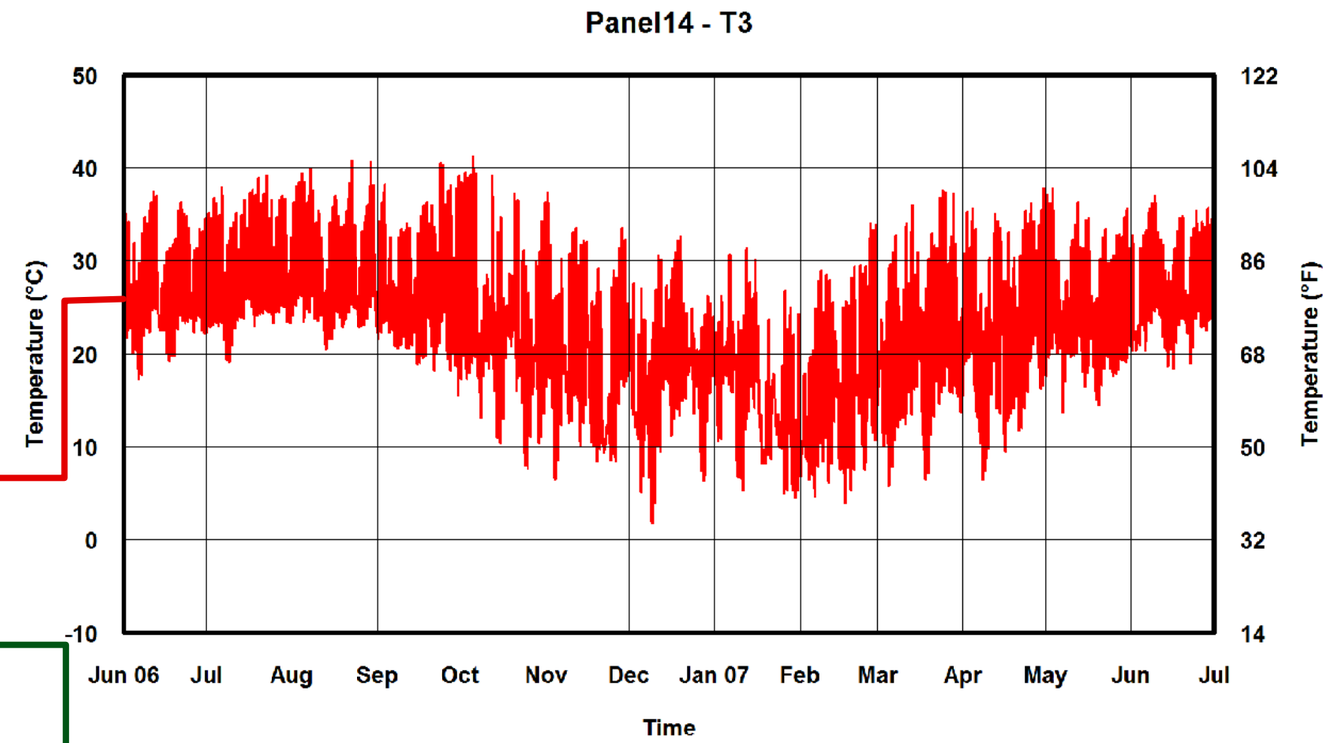
Panel14 - T3
Temperature (°C)
Temperature (°F)
50
40
30
20
10
0
-10
122
104
86
68
50
32
14
Jun 06
Jul
Aug
Sep
Oct
Nov
Dec
Jan 07
Feb
Mar
Apr
May
Jun
Jul
Time

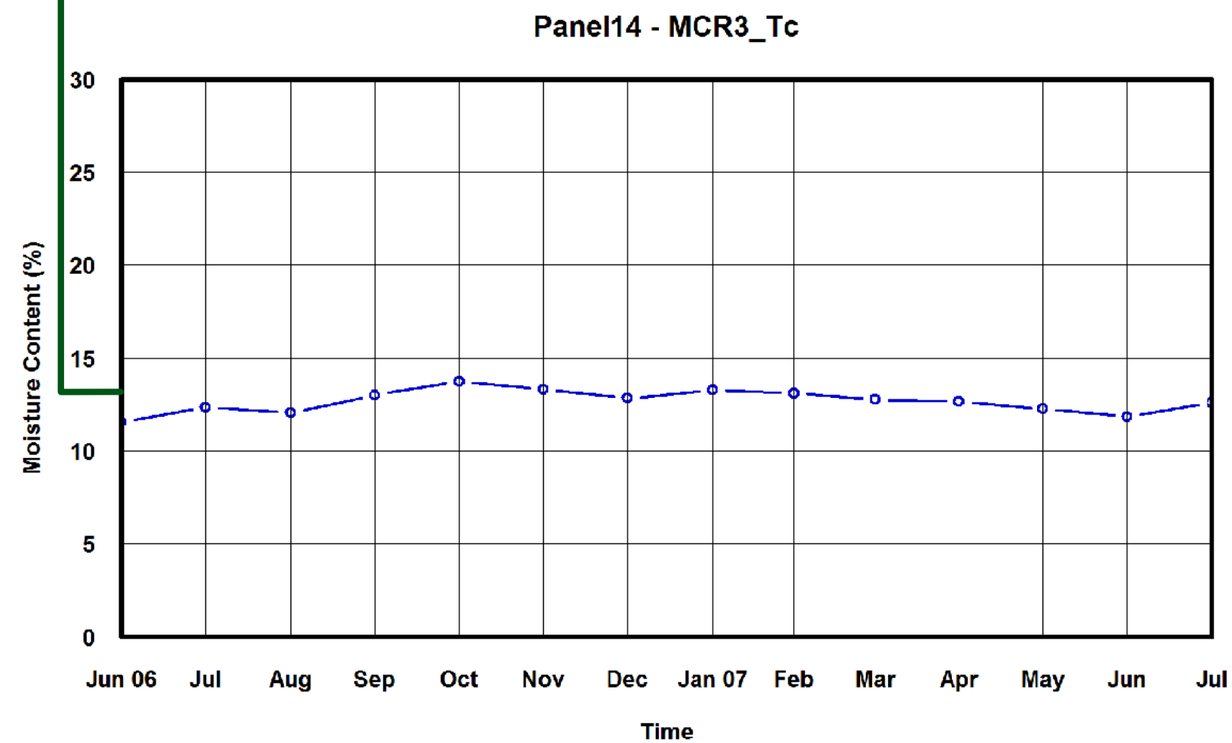
Panel14 - MCR3_Tc
Moisture Content (%)
30
25
20
15
10
5
0
Jun 06
Jul
Aug
Sep
Oct
Nov
Dec
Jan 07
Feb
Mar
Apr
May
Jun
Jul
Time

Panel 14

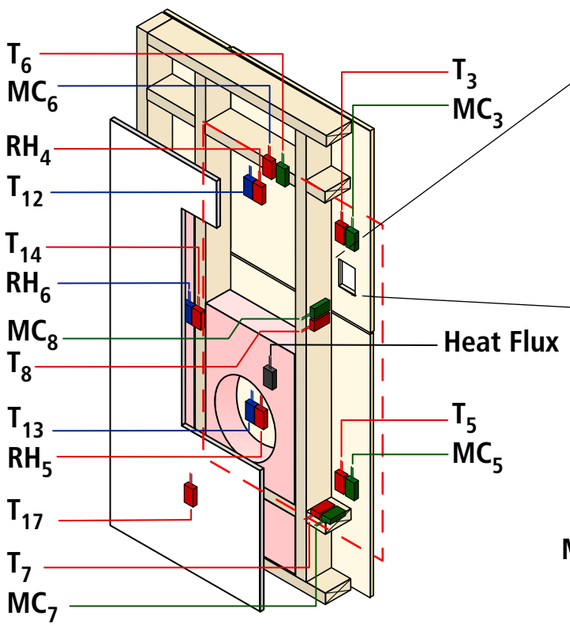
T_6
MC_6
RH_4
T_{12}
T_{14}
RH_6
MC_8
T_8
T_{13}
RH_5
T_{17}
T_7
MC_7
T_3
MC_3
Heat Flux
T_5
MC_5

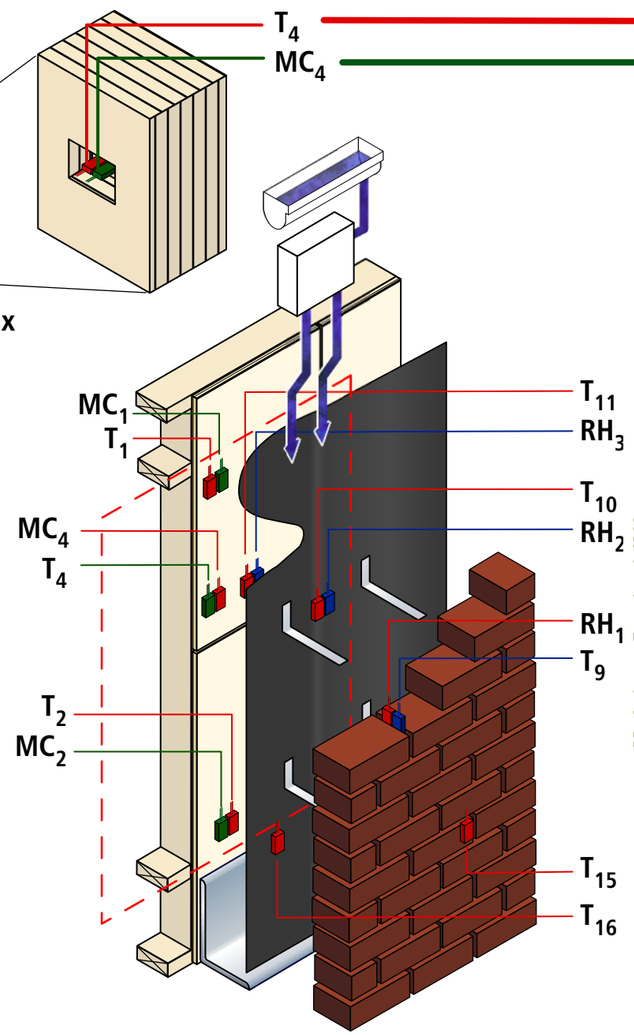
T_4
MC_4
MC_1
T_1
MC_4
T_4
T_2
MC_2
T_{11}
RH_3
T_{10}
RH_2
RH_1
T_9
T_{15}
T_{16}

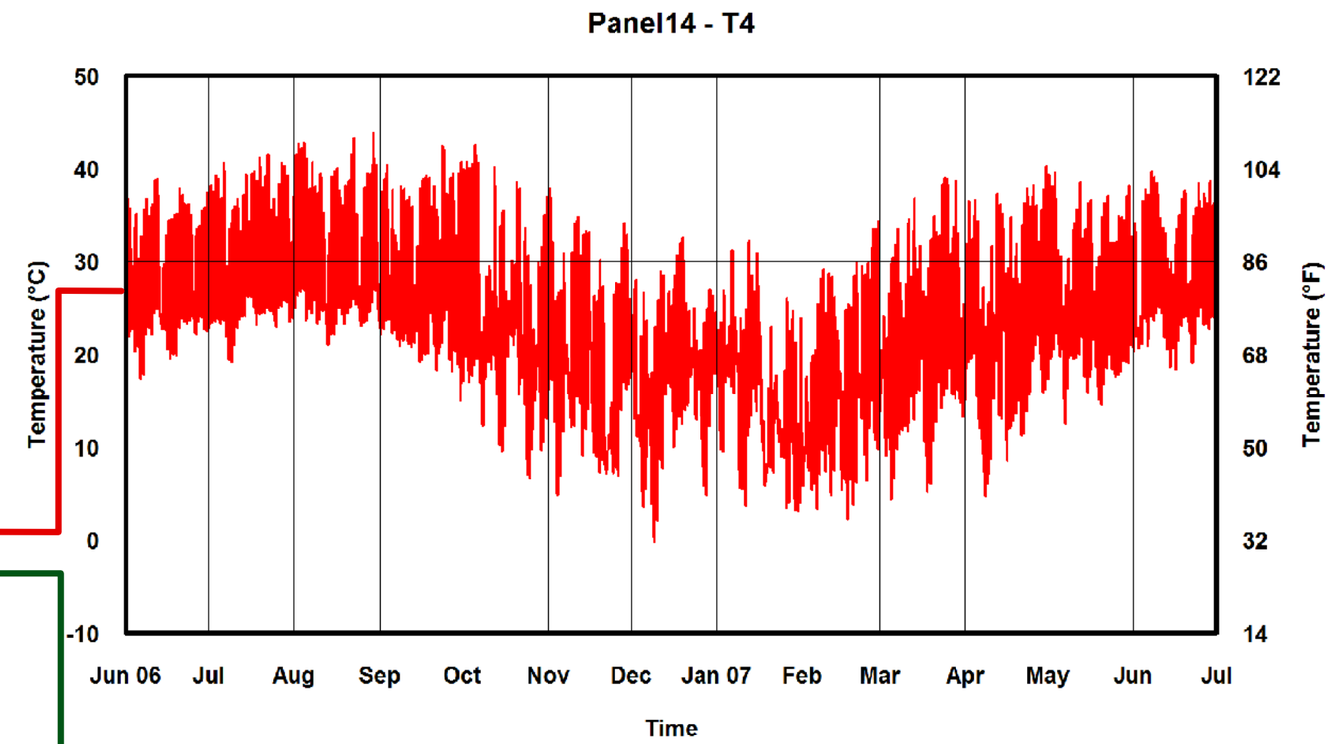
Panel14 - T4
Temperature (°C)
Temperature (°F)
50
40
30
20
10
0
-10
122
104
86
68
50
32
14
Jun 06
Jul
Aug
Sep
Oct
Nov
Dec
Jan 07
Feb
Mar
Apr
May
Jun
Jul
Time

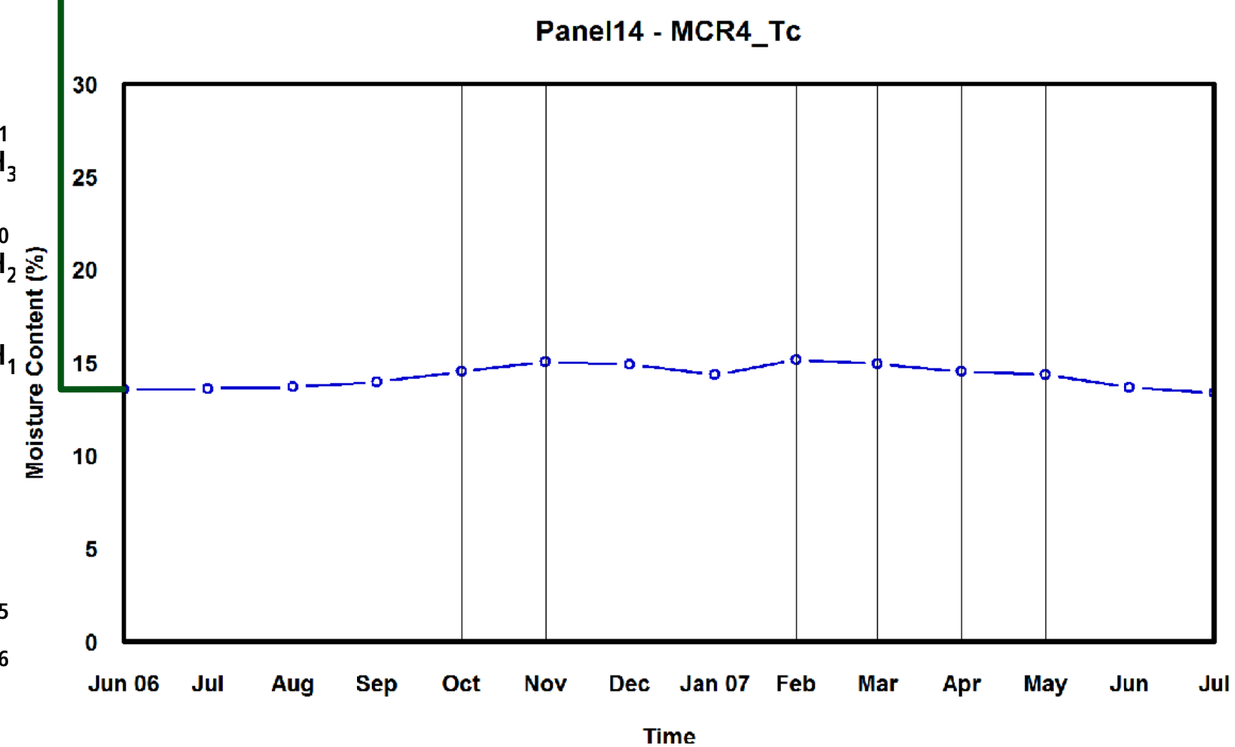
Panel14 - MCR4_Tc
Moisture Content (%)
30
25
20
15
10
5
0
Jun 06
Jul
Aug
Sep
Oct
Nov
Dec
Jan 07
Feb
Mar
Apr
May
Jun
Jul
Time

Panel 14

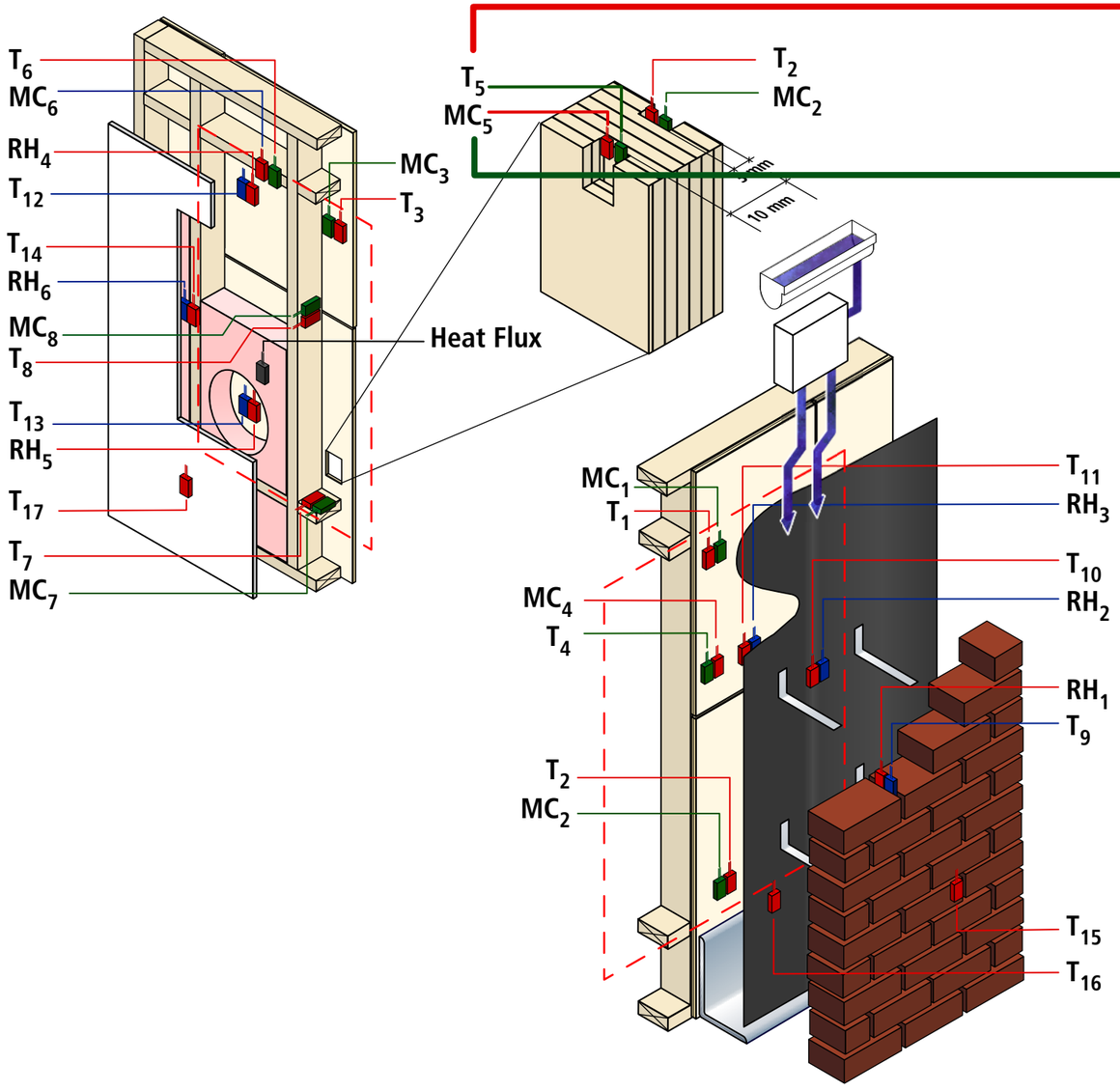
T_6
MC_6
RH_4
T_{12}
T_{14}
RH_6
MC_8
T_8
T_{13}
RH_5
T_{17}
T_7
MC_7
MC_3
T_3
Heat Flux
T_5
MC_5
T_2
MC_2
5 mm
10 mm
MC_1
T_1
MC_4
T_4
T_2
MC_2
T_{11}
RH_3
T_{10}
RH_2
RH_1
T_9
T_{15}
T_{16}

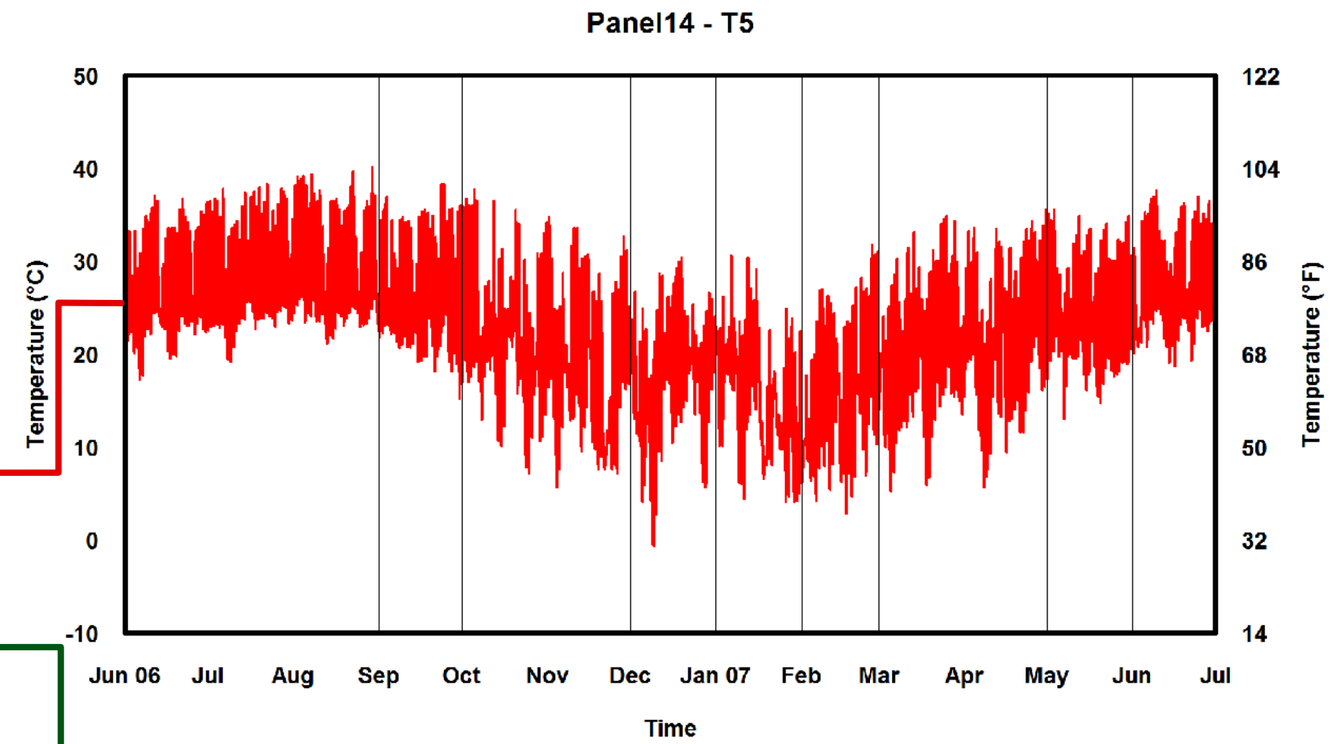
Panel14 - T5
Temperature (°C)
Temperature (°F)
50
40
30
20
10
0
-10
122
104
86
68
50
32
14
Jun 06
Jul
Aug
Sep
Oct
Nov
Dec
Jan 07
Feb
Mar
Apr
May
Jun
Jul
Time

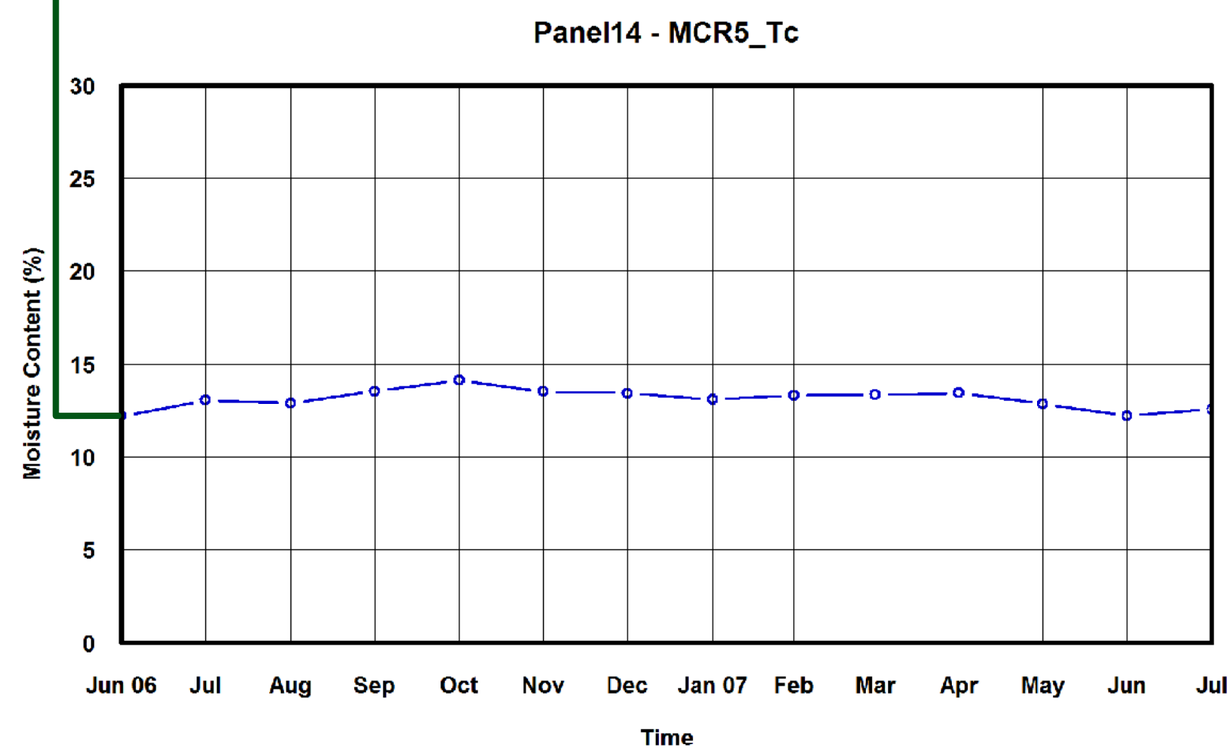
Panel14 - MCR5_Tc
Moisture Content (%)
30
25
20
15
10
5
0
Jun 06
Jul
Aug
Sep
Oct
Nov
Dec
Jan 07
Feb
Mar
Apr
May
Jun
Jul
Time

Panel 14

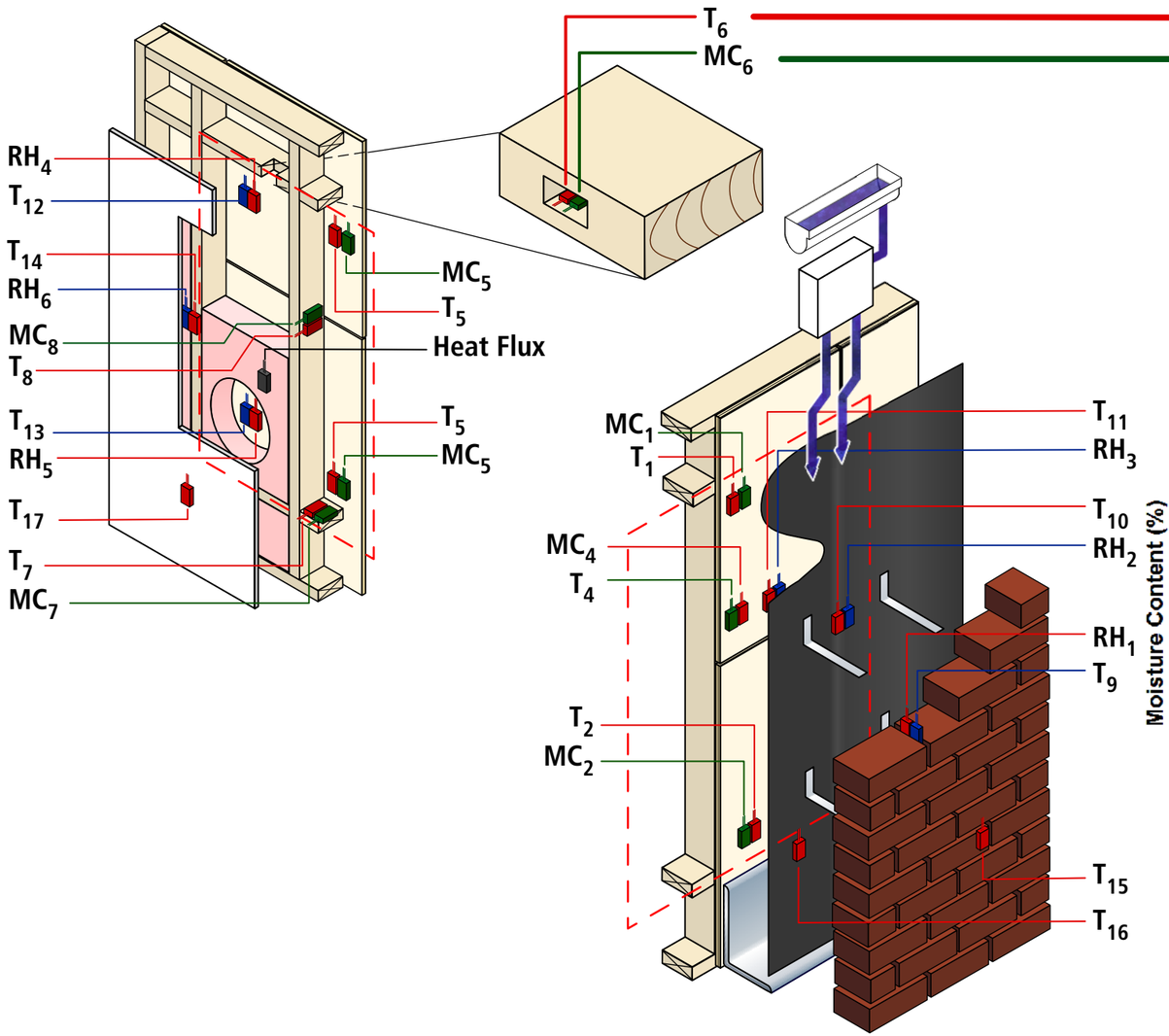
T_6
MC_6
RH_4
T_{12}
T_{14}
RH_6
MC_8
T_8
T_{13}
RH_5
T_{17}
T_7
MC_7
MC_5
T_5
Heat Flux
T_5
MC_5
MC_1
T_1
MC_4
T_4
T_2
MC_2
T_{11}
RH_3
T_{10}
RH_2
RH_1
T_9
T_{15}
T_{16}

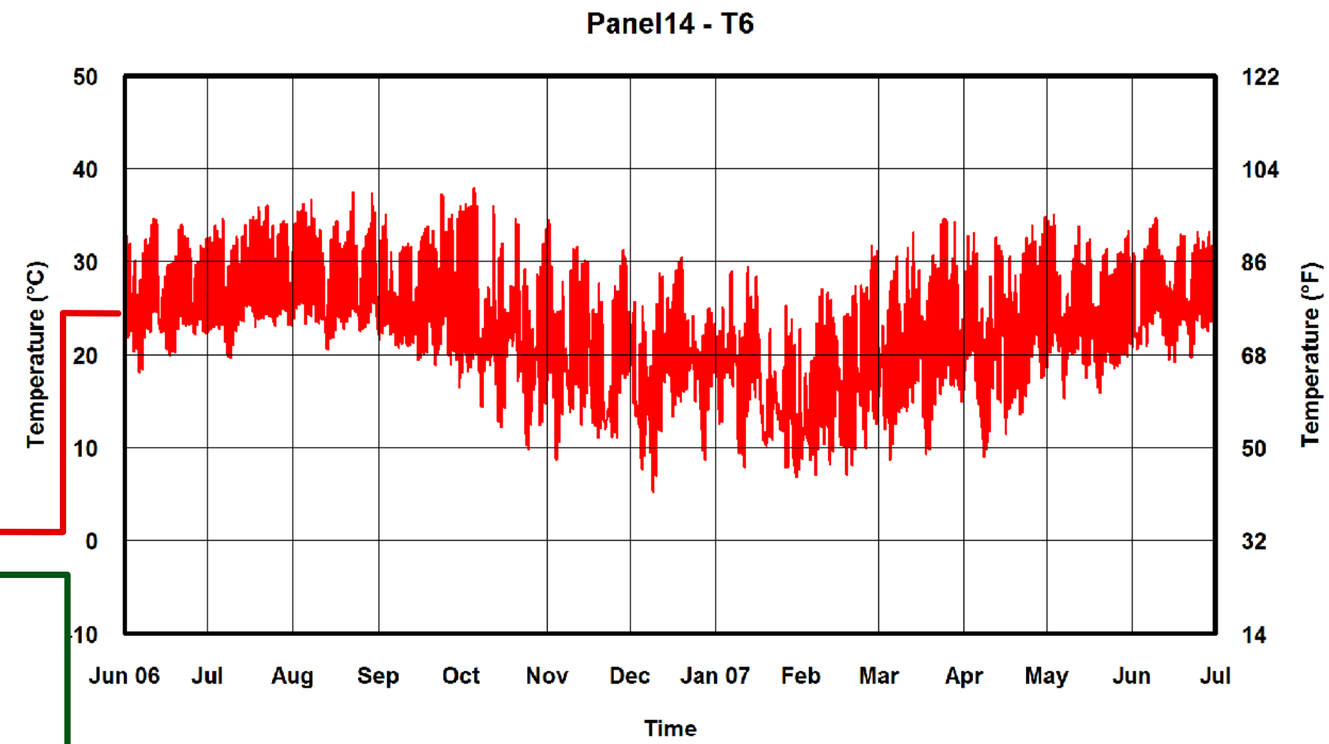
Panel14 - T6
Temperature (°C)
50
40
30
20
10
0
-10
Temperature (°F)
122
104
86
68
50
32
14
Jun 06
Jul
Aug
Sep
Oct
Nov
Dec
Jan 07
Feb
Mar
Apr
May
Jun
Jul
Time

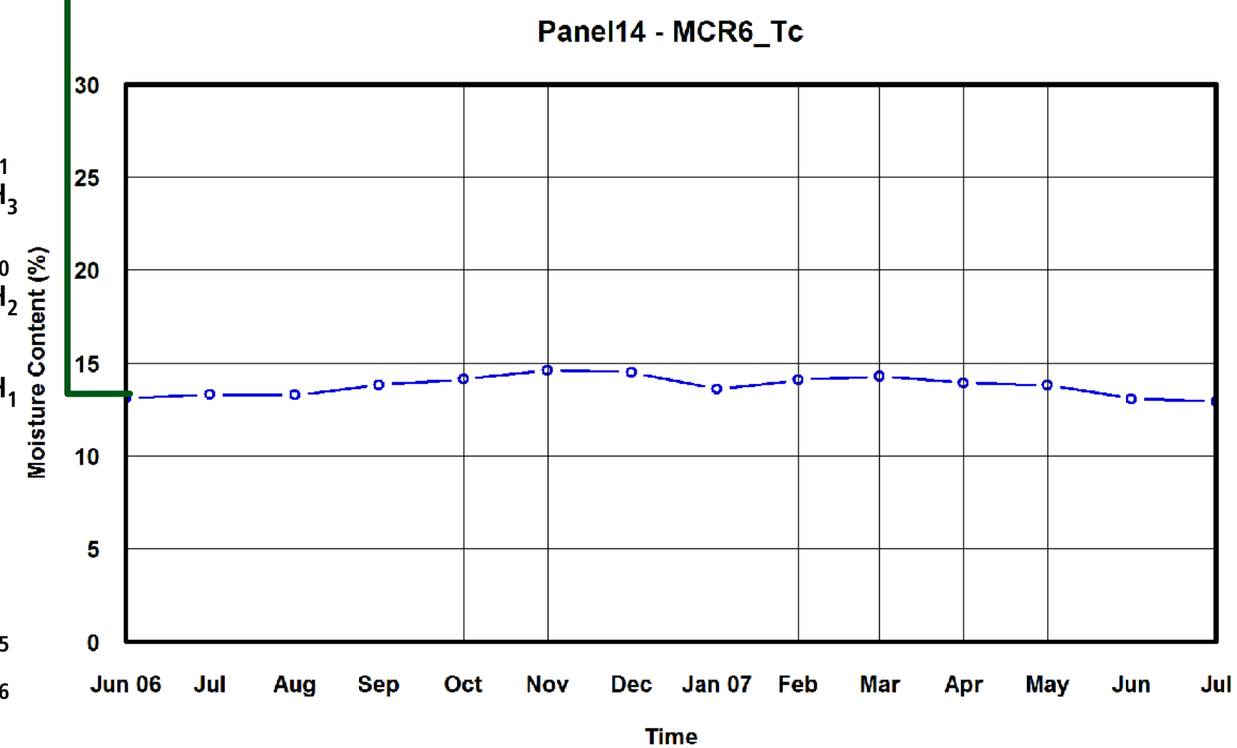
Panel14 - MCR6_Tc
Moisture Content (%)
30
25
20
15
10
5
0
Jun 06
Jul
Aug
Sep
Oct
Nov
Dec
Jan 07
Feb
Mar
Apr
May
Jun
Jul
Time

Panel 14

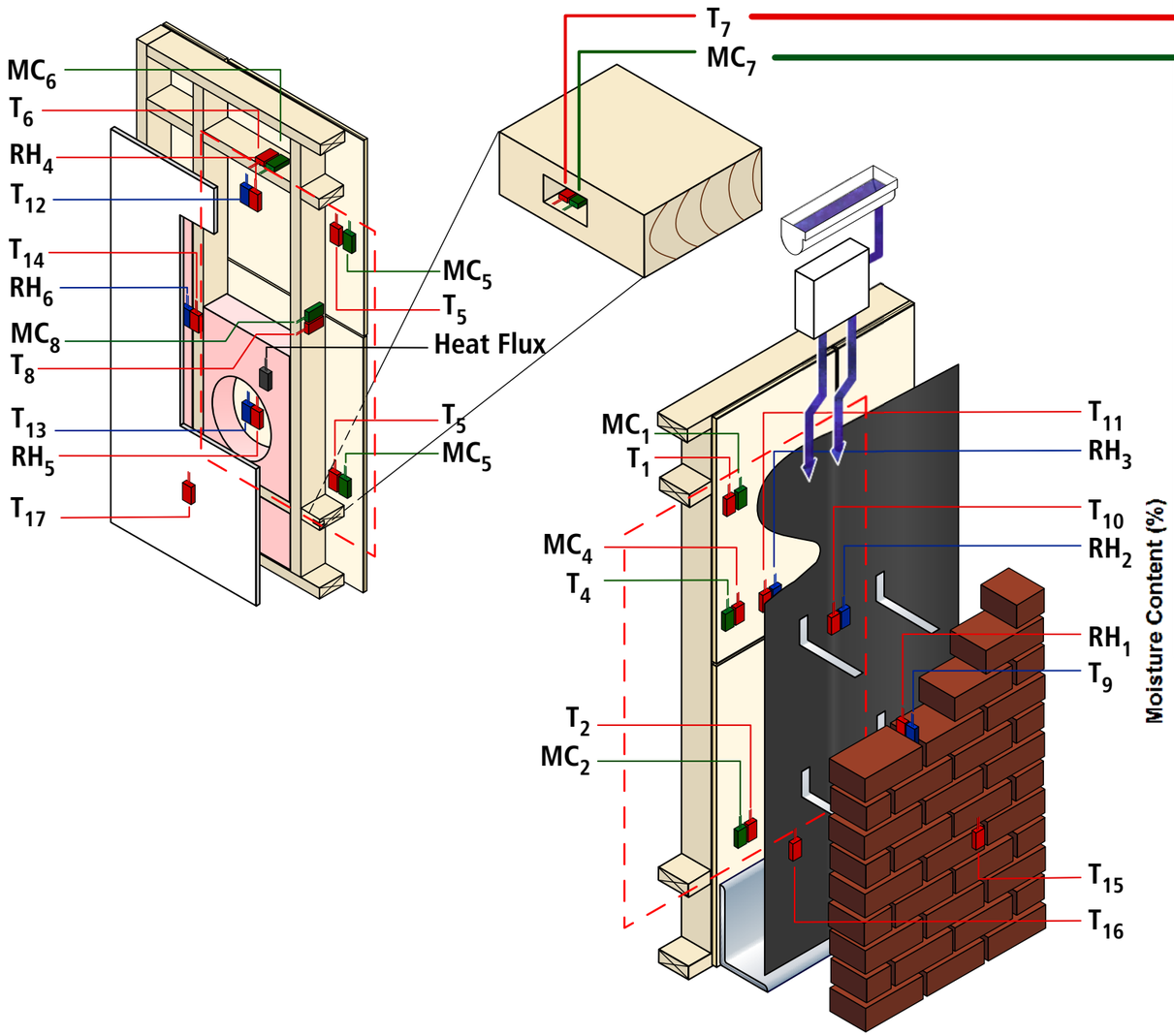
MC6
T6
RH4
T12
T14
RH6
MC8
T8
T13
RH5
T17
MC5
T5
Heat Flux
T5
MC5
T7
MC7
MC1
T1
MC4
T4
T2
MC2
T11
RH3
T10
RH2
RH1
T9
T15
T16

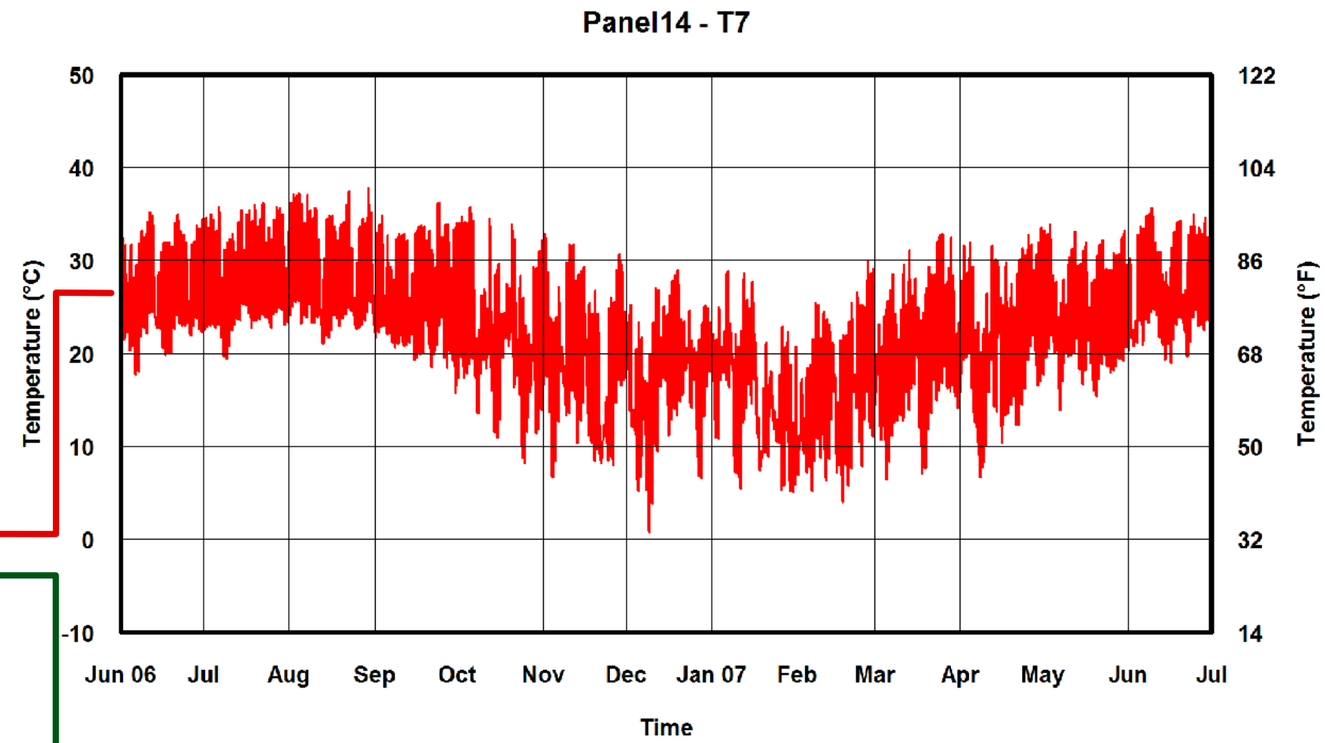
Panel14 - T7
Temperature (°C)
Temperature (°F)
50
40
30
20
10
0
-10
122
104
86
68
50
32
14
Jun 06
Jul
Aug
Sep
Oct
Nov
Dec
Jan 07
Feb
Mar
Apr
May
Jun
Jul
Time

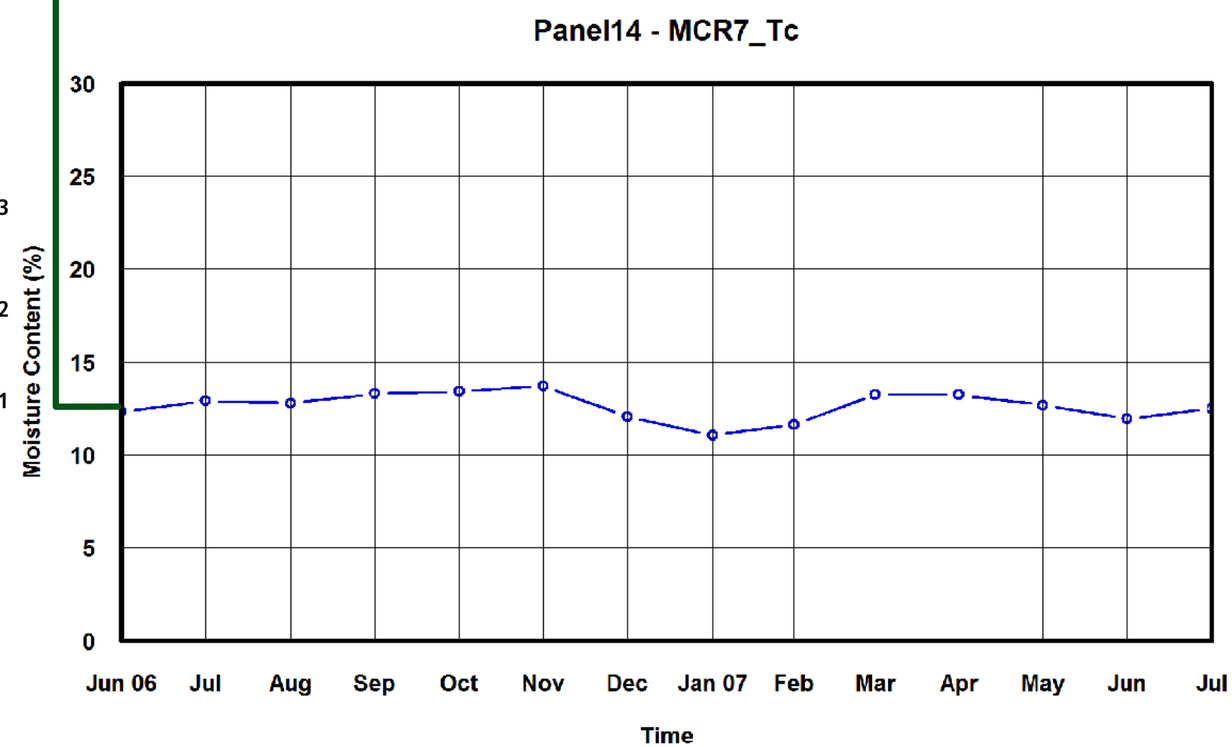
Panel14 - MCR7_Tc
Moisture Content (%)
30
25
20
15
10
5
0
Jun 06
Jul
Aug
Sep
Oct
Nov
Dec
Jan 07
Feb
Mar
Apr
May
Jun
Jul
Time

Panel 14

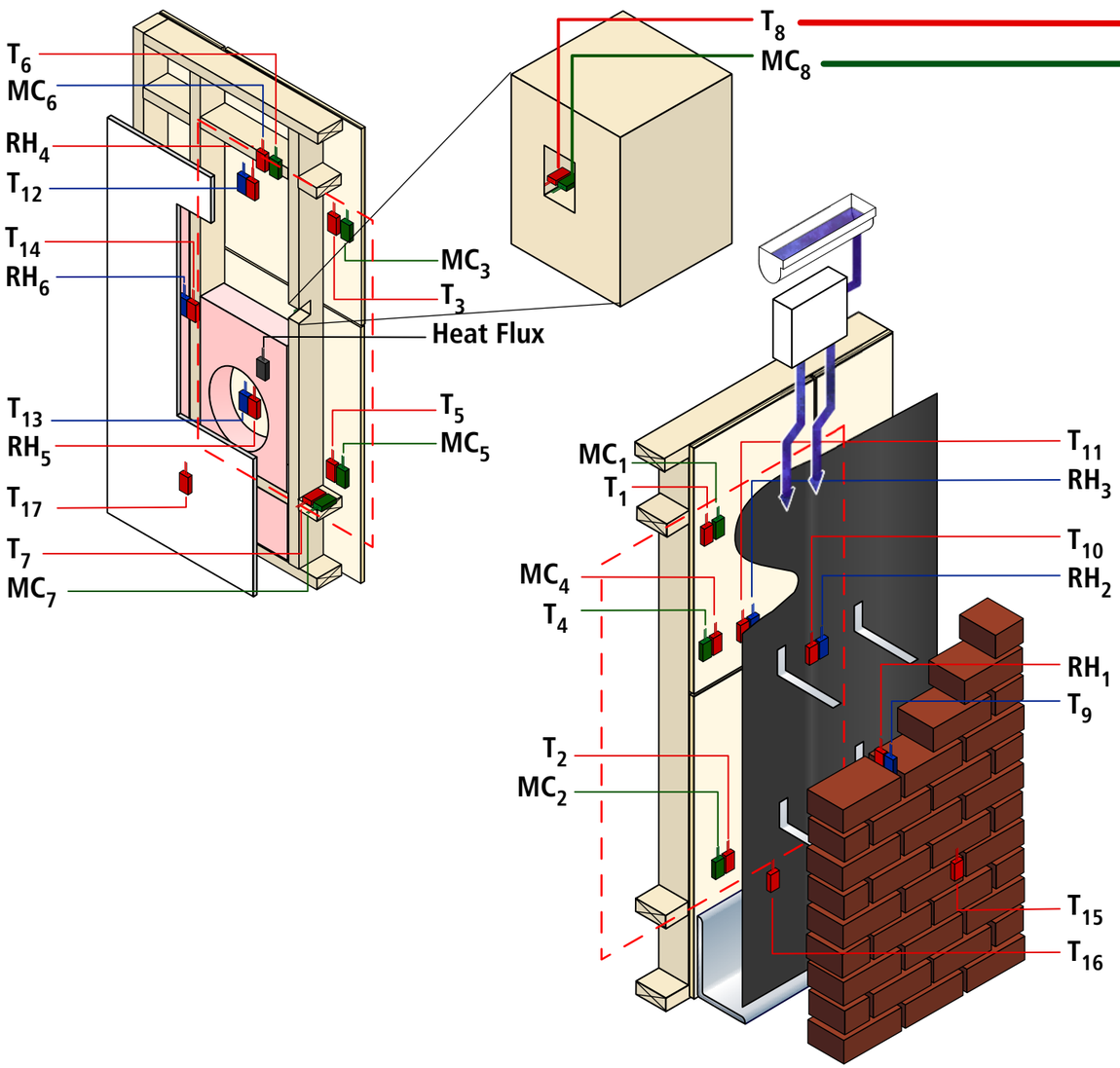
T_6
MC_6
RH_4
T_{12}
T_{14}
RH_6
T_{13}
RH_5
T_{17}
T_7
MC_7
T_8
MC_8
MC_3
T_3
Heat Flux
T_5
MC_5
MC_1
T_1
MC_4
T_4
T_2
MC_2
T_{11}
RH_3
T_{10}
RH_2
RH_1
T_9
T_{15}
T_{16}

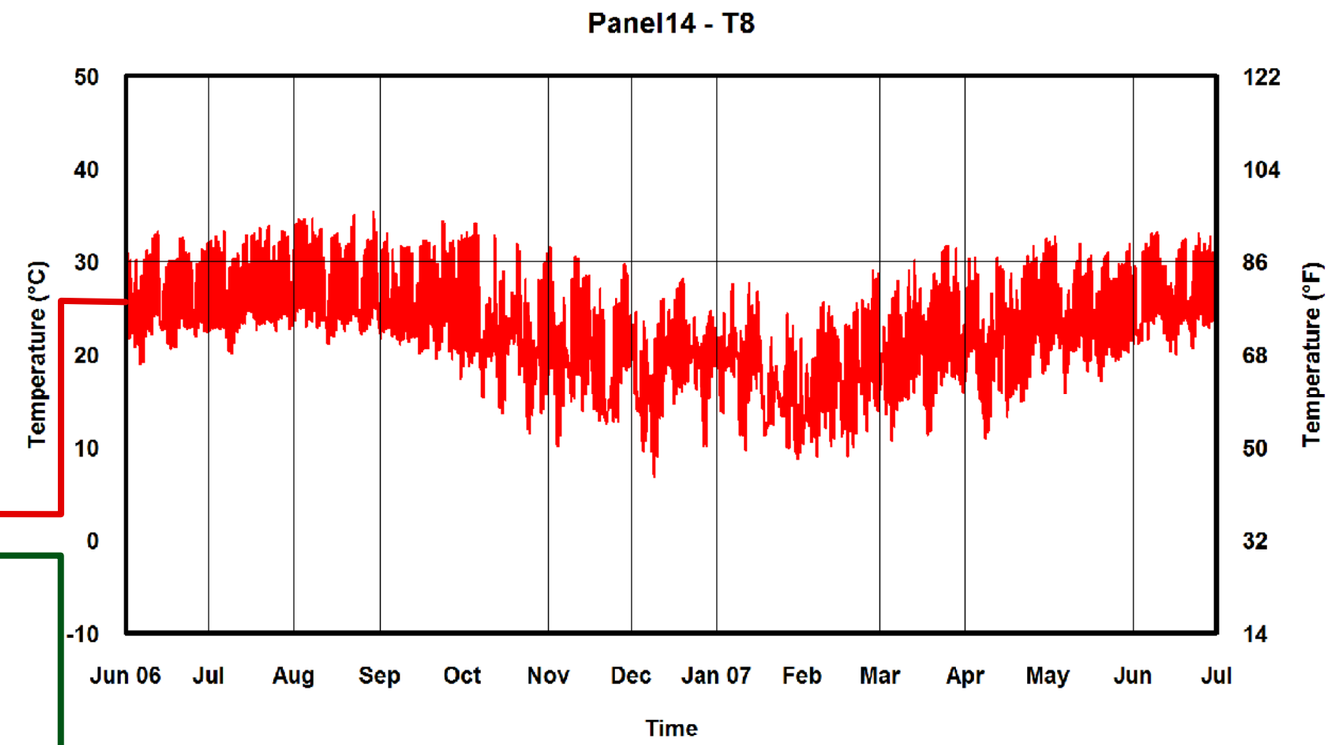
Panel14 - T8
Temperature (°C)
Temperature (°F)
50
40
30
20
10
0
-10
122
104
86
68
50
32
14
Jun 06
Jul
Aug
Sep
Oct
Nov
Dec
Jan 07
Feb
Mar
Apr
May
Jun
Jul
Time

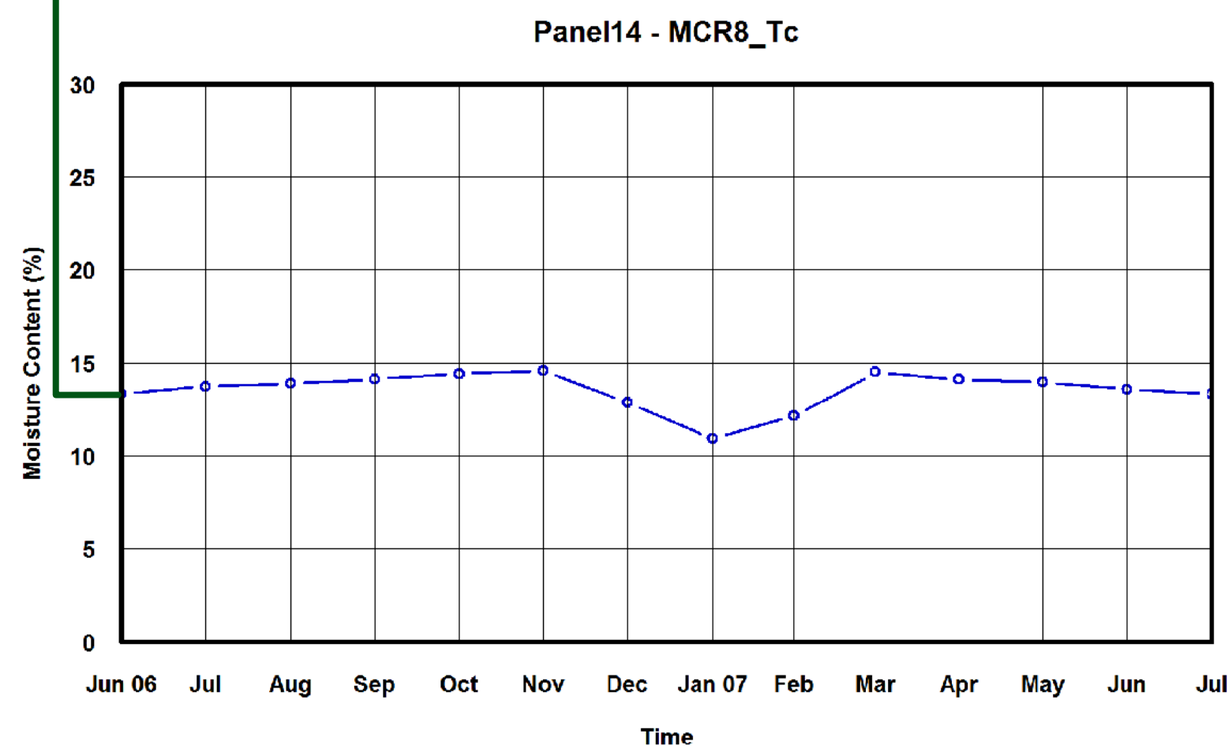
Panel14 - MCR8_Tc
Moisture Content (%)
30
25
20
15
10
5
0
Jun 06
Jul
Aug
Sep
Oct
Nov
Dec
Jan 07
Feb
Mar
Apr
May
Jun
Jul
Time

Panel 14

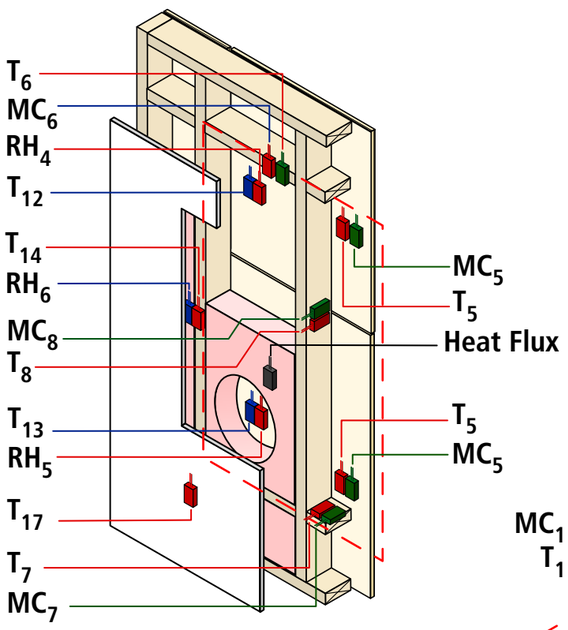
T_6
MC_6
RH_4
T_{12}
T_{14}
RH_6
MC_8
T_8
T_{13}
RH_5
T_{17}
T_7
MC_7
MC_5
T_5
Heat Flux
T_5
MC_5

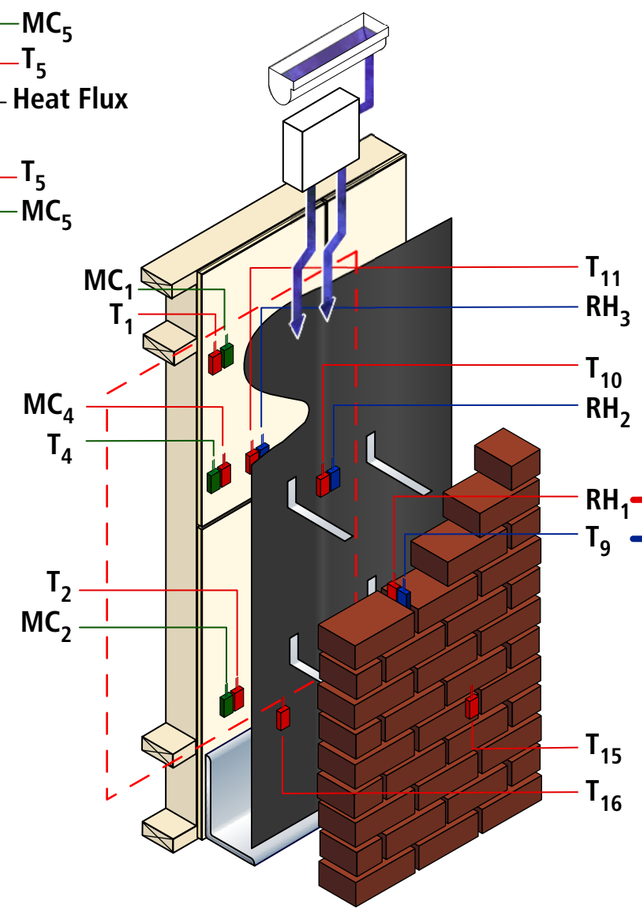
MC_1
T_1
MC_4
T_4
T_2
MC_2
T_{11}
RH_3
T_{10}
RH_2
RH_1
T_9
T_{15}
T_{16}

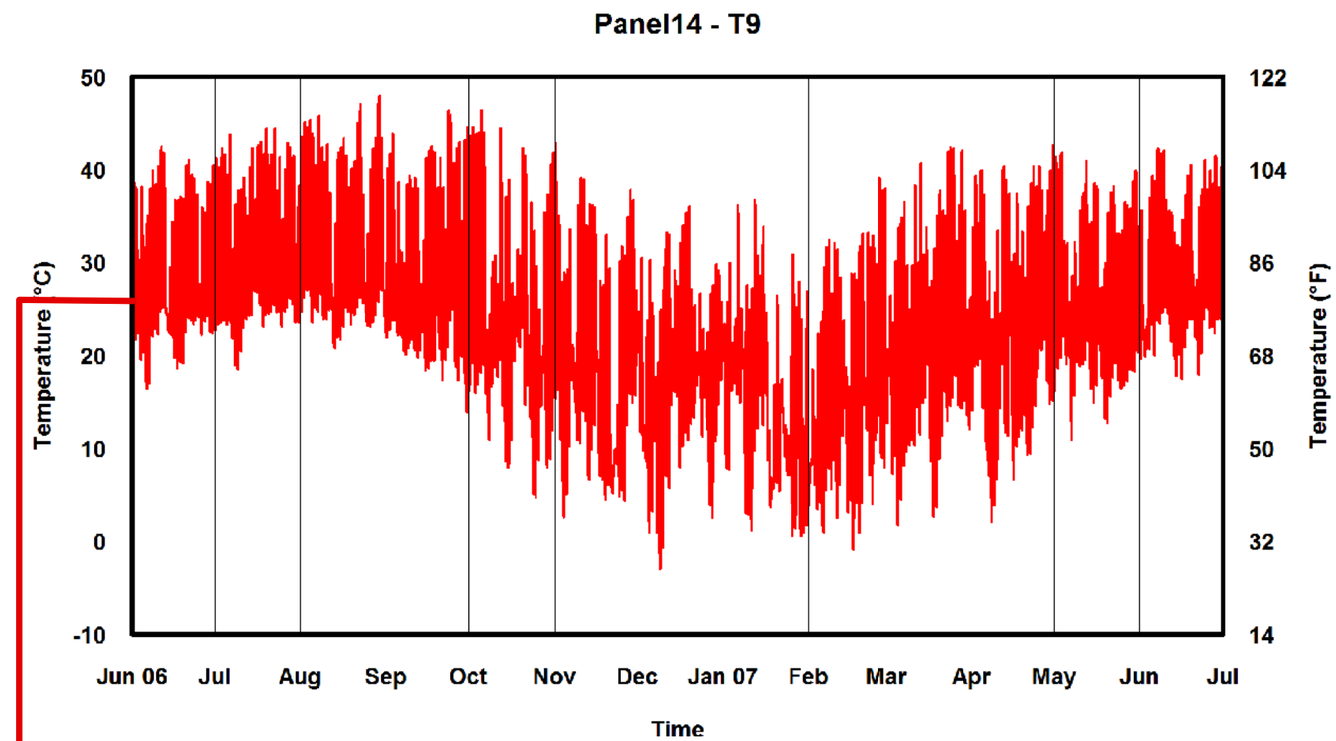
Panel14 - T9
Temperature (°C)
Temperature (°F)
50
40
30
20
10
0
-10
122
104
86
68
50
32
14
Jun 06
Jul
Aug
Sep
Oct
Nov
Dec
Jan 07
Feb
Mar
Apr
May
Jun
Jul
Time

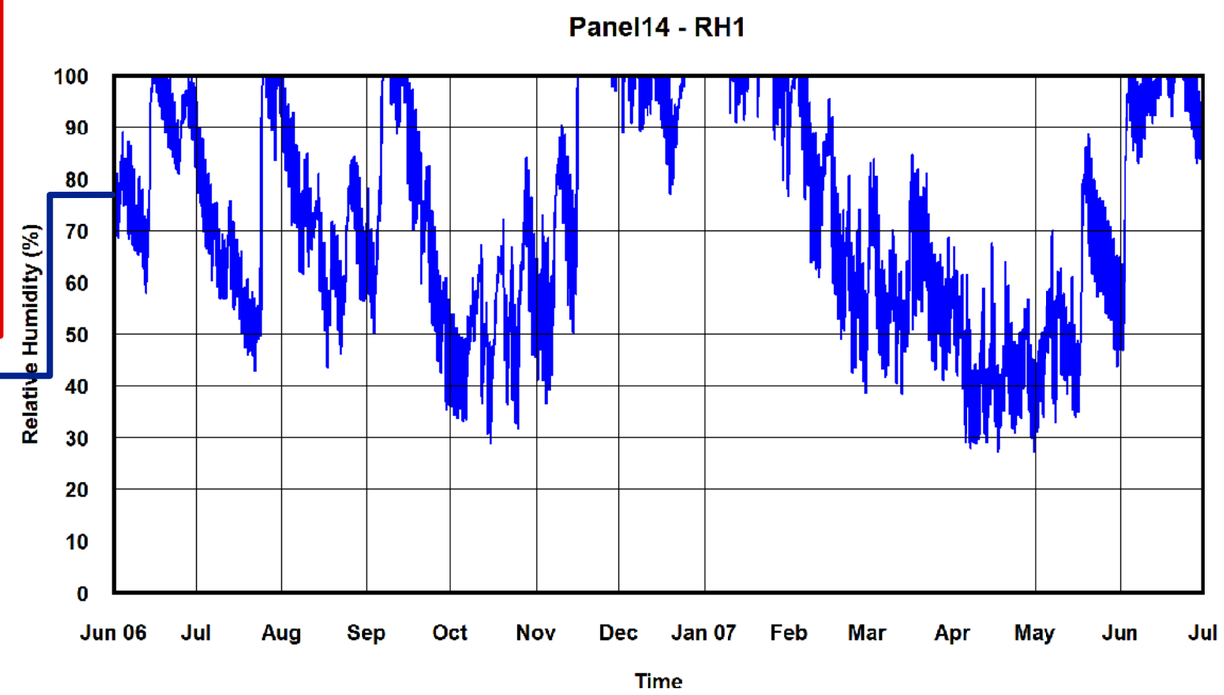
Panel14 - RH1
Relative Humidity (%)
100
90
80
70
60
50
40
30
20
10
0
Jun 06
Jul
Aug
Sep
Oct
Nov
Dec
Jan 07
Feb
Mar
Apr
May
Jun
Jul
Time

Panel 14

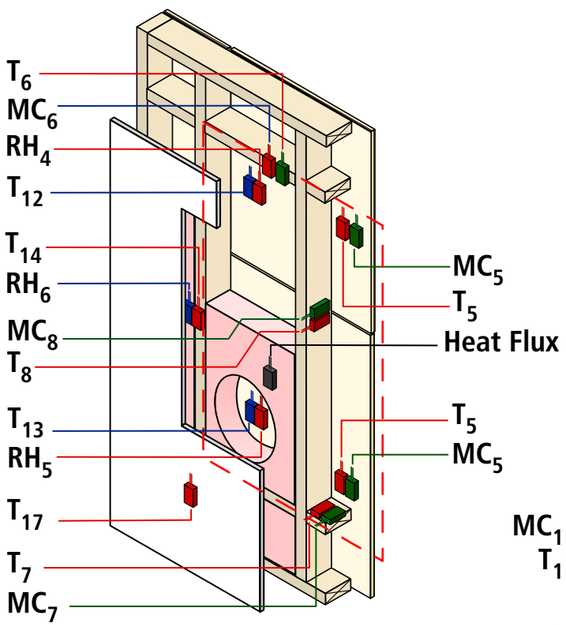
T_6
MC_6
RH_4
T_{12}
T_{14}
RH_6
MC_8
T_8
T_{13}
RH_5
T_{17}
T_7
MC_7
MC_5
T_5
Heat Flux
T_5
MC_5

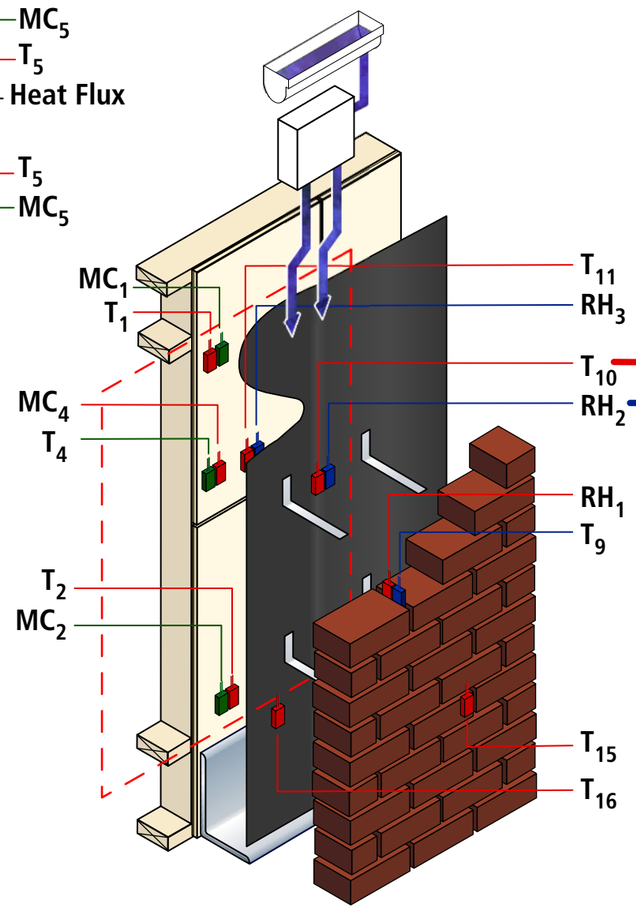
MC_1
T_1
MC_4
T_4
T_2
MC_2
T_{11}
RH_3
T_{10}
RH_2
RH_1
T_9
T_{15}
T_{16}

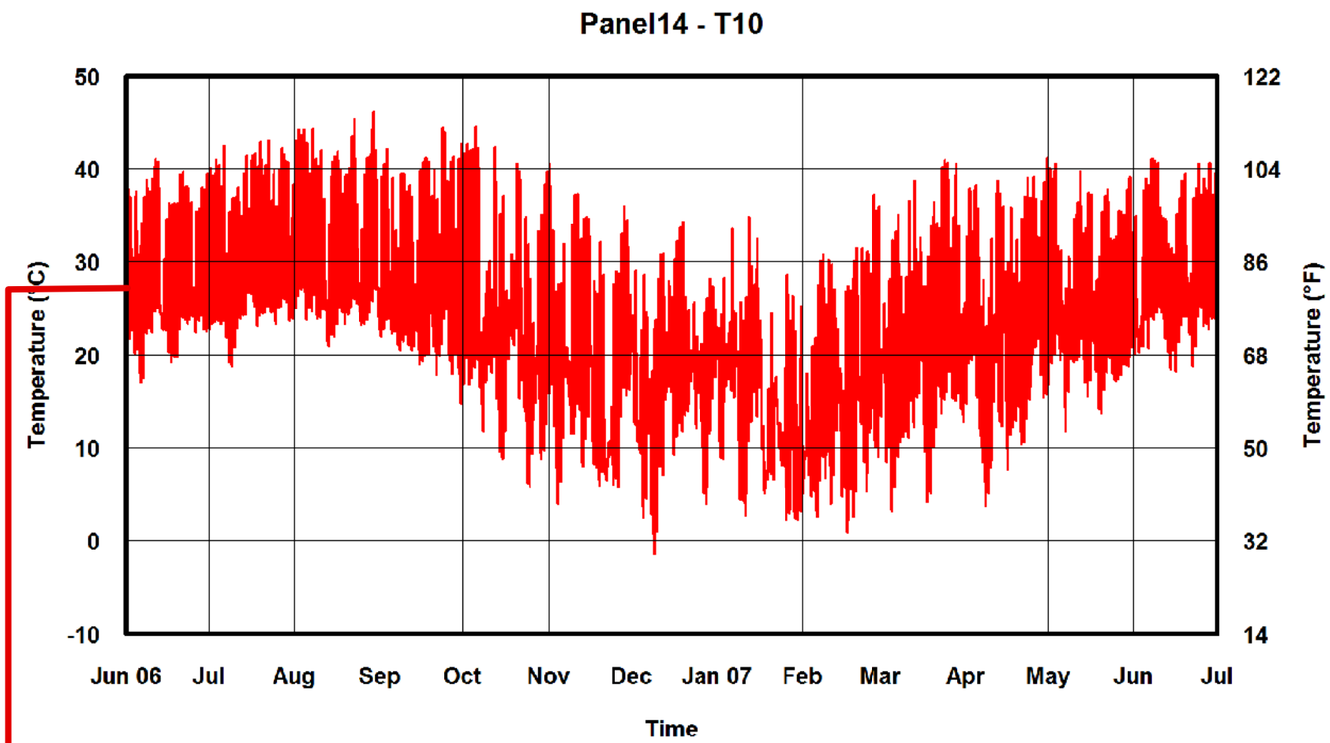
Panel14 - T10
Temperature (°C)
Temperature (°F)
50
40
30
20
10
0
-10
122
104
86
68
50
32
14
Jun 06
Jul
Aug
Sep
Oct
Nov
Dec
Jan 07
Feb
Mar
Apr
May
Jun
Jul
Time

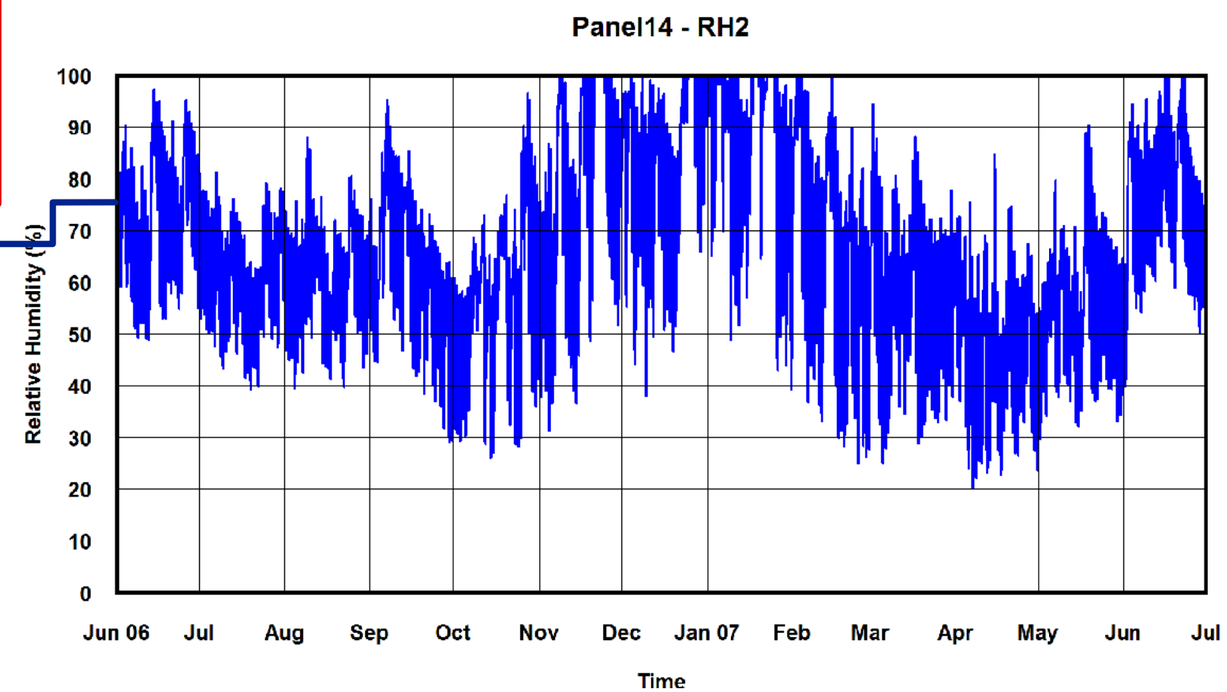
Panel14 - RH2
Relative Humidity (%)
100
90
80
70
60
50
40
30
20
10
0
Jun 06
Jul
Aug
Sep
Oct
Nov
Dec
Jan 07
Feb
Mar
Apr
May
Jun
Jul
Time

Panel 14

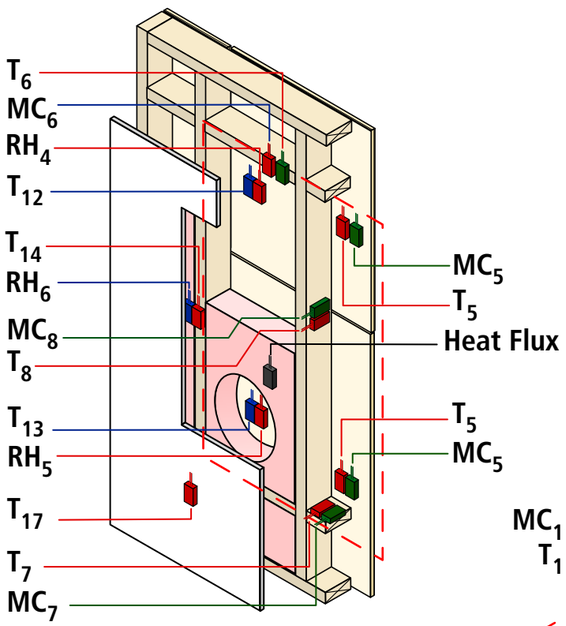
T_6
MC_6
RH_4
T_{12}
T_{14}
RH_6
MC_8
T_8
T_{13}
RH_5
T_{17}
T_7
MC_7
MC_5
T_5
Heat Flux
T_5
MC_5

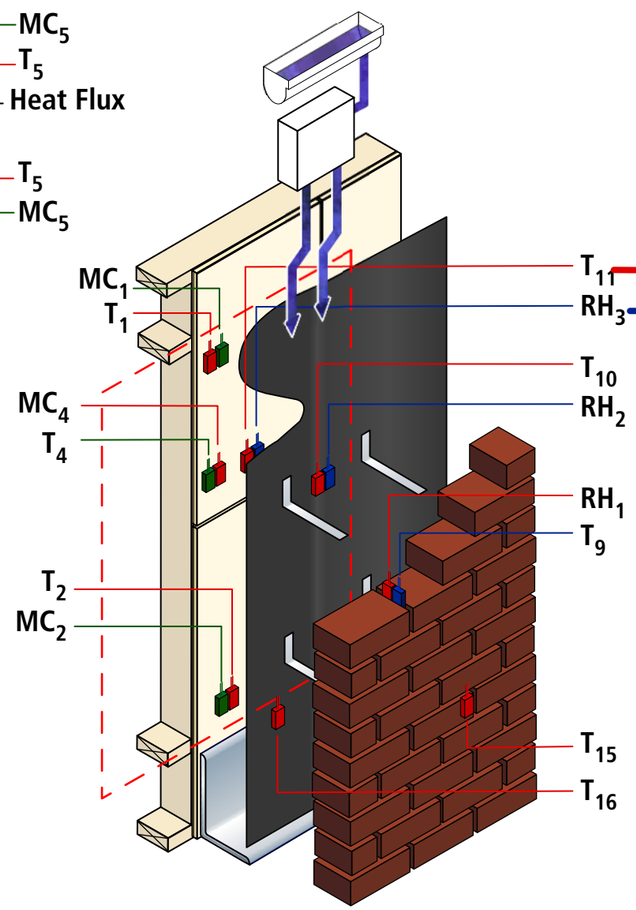
MC_1
T_1
MC_4
T_4
T_2
MC_2
T_{11}
RH_3
T_{10}
RH_2
RH_1
T_9
T_{15}
T_{16}

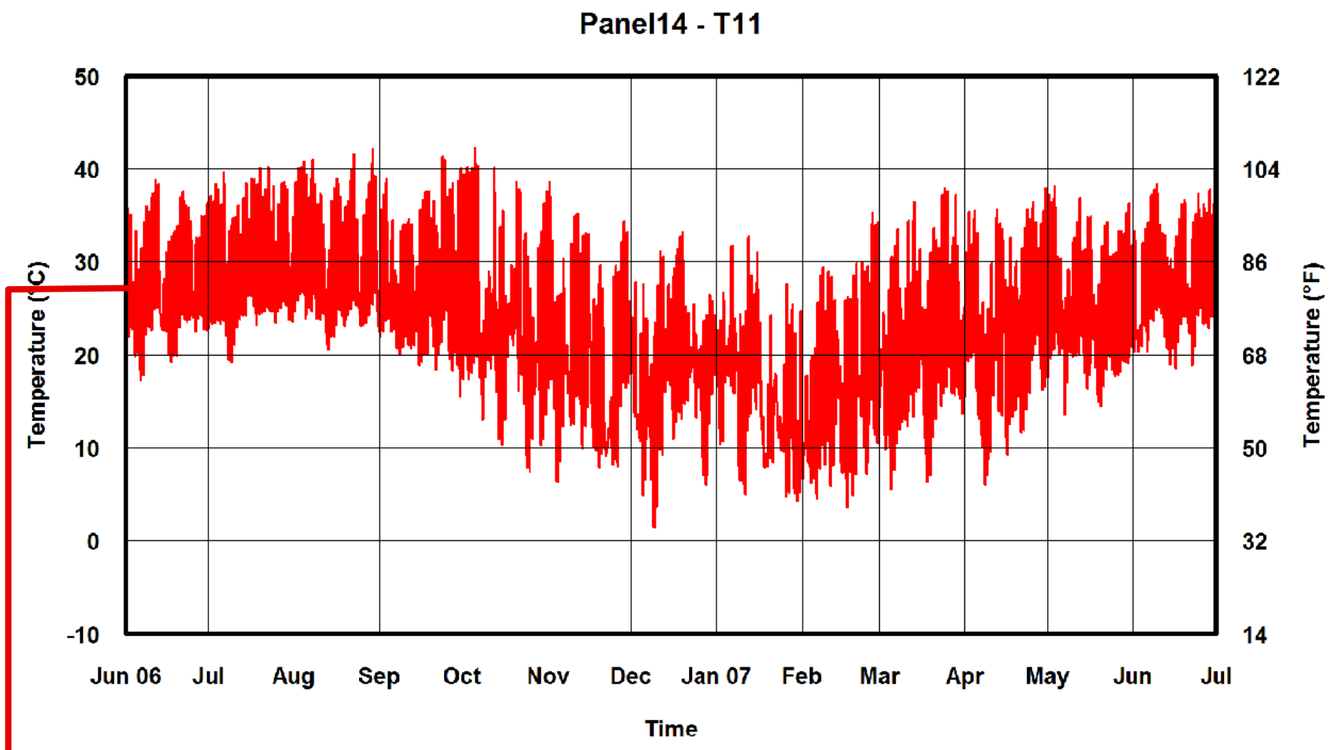
Panel14 - T11
Temperature (°C)
Temperature (°F)
50
40
30
20
10
0
-10
122
104
86
68
50
32
14
Jun 06
Jul
Aug
Sep
Oct
Nov
Dec
Jan 07
Feb
Mar
Apr
May
Jun
Jul
Time

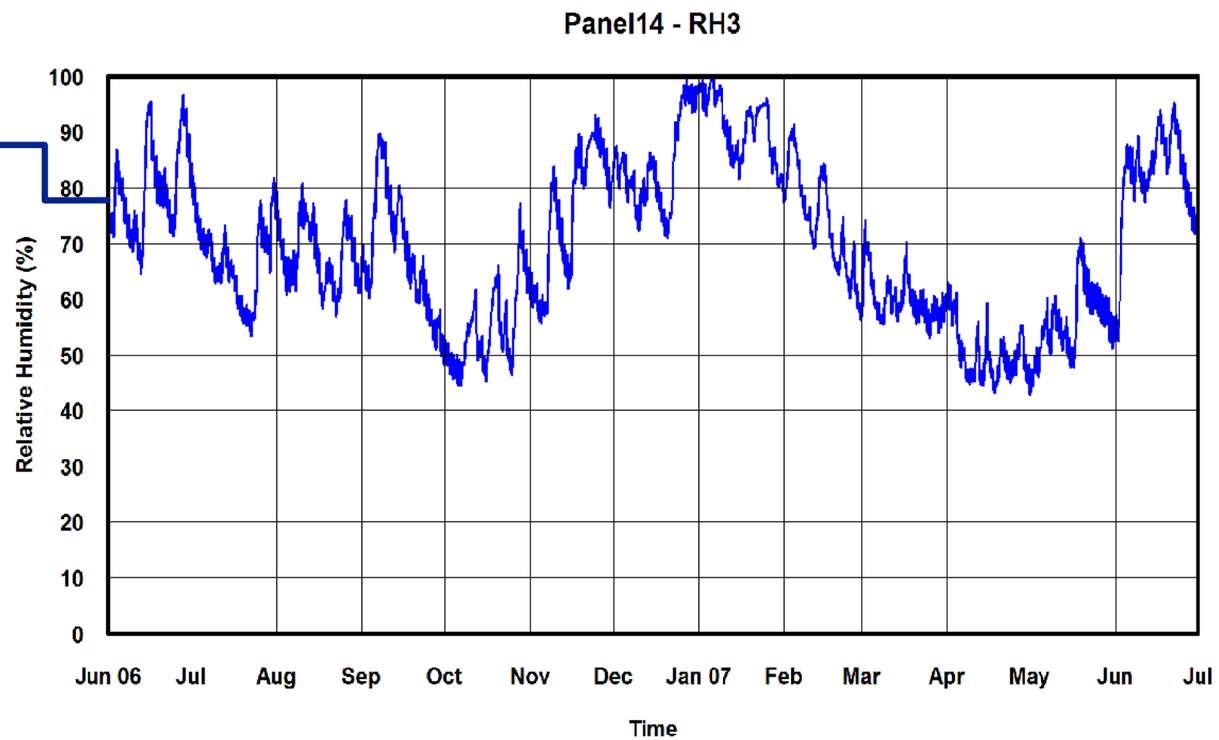
Panel14 - RH3
Relative Humidity (%)
100
90
80
70
60
50
40
30
20
10
0
Jun 06
Jul
Aug
Sep
Oct
Nov
Dec
Jan 07
Feb
Mar
Apr
May
Jun
Jul
Time

Panel 14

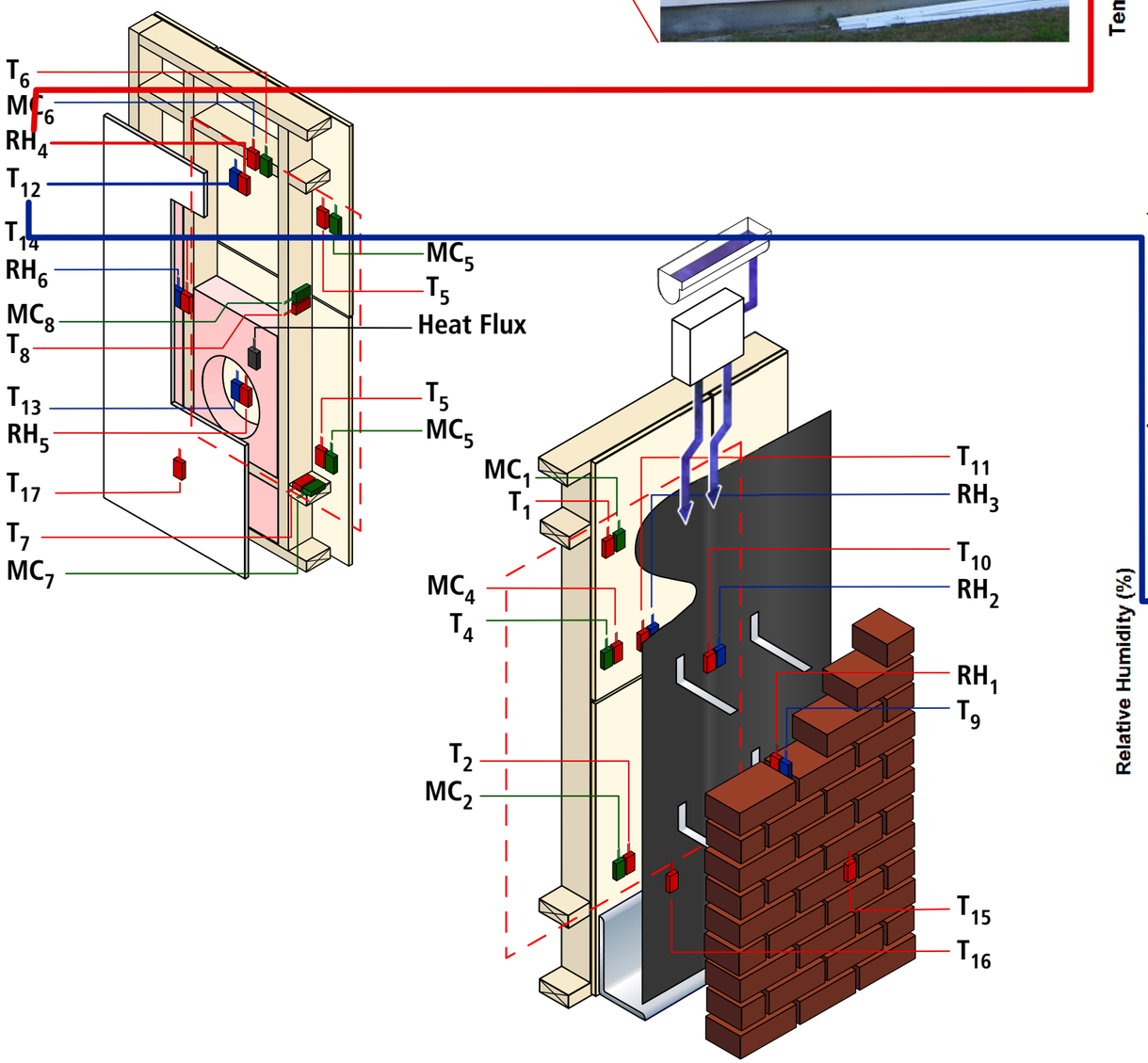
T_6
MC_6
RH_4
T_{12}
T_{14}
RH_6
MC_8
T_8
T_{13}
RH_5
T_{17}
T_7
MC_7
MC_5
T_5
Heat Flux
T_5
MC_5
MC_1
T_1
MC_4
T_4
T_2
MC_2
T_{11}
RH_3
T_{10}
RH_2
RH_1
T_9
T_{15}
T_{16}

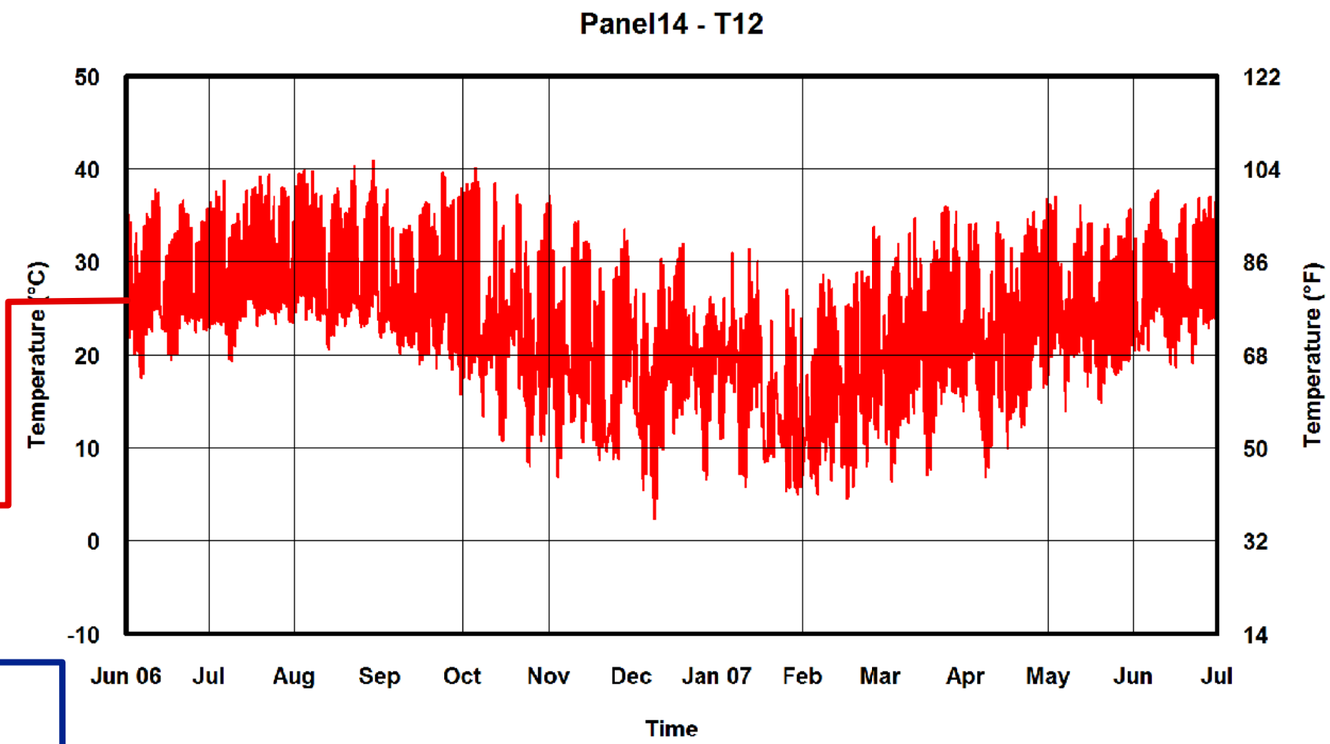
Panel14 - T12
Temperature (°C)
Temperature (°F)
50
40
30
20
10
0
-10
122
104
86
68
50
32
14
Jun 06
Jul
Aug
Sep
Oct
Nov
Dec
Jan 07
Feb
Mar
Apr
May
Jun
Jul
Time

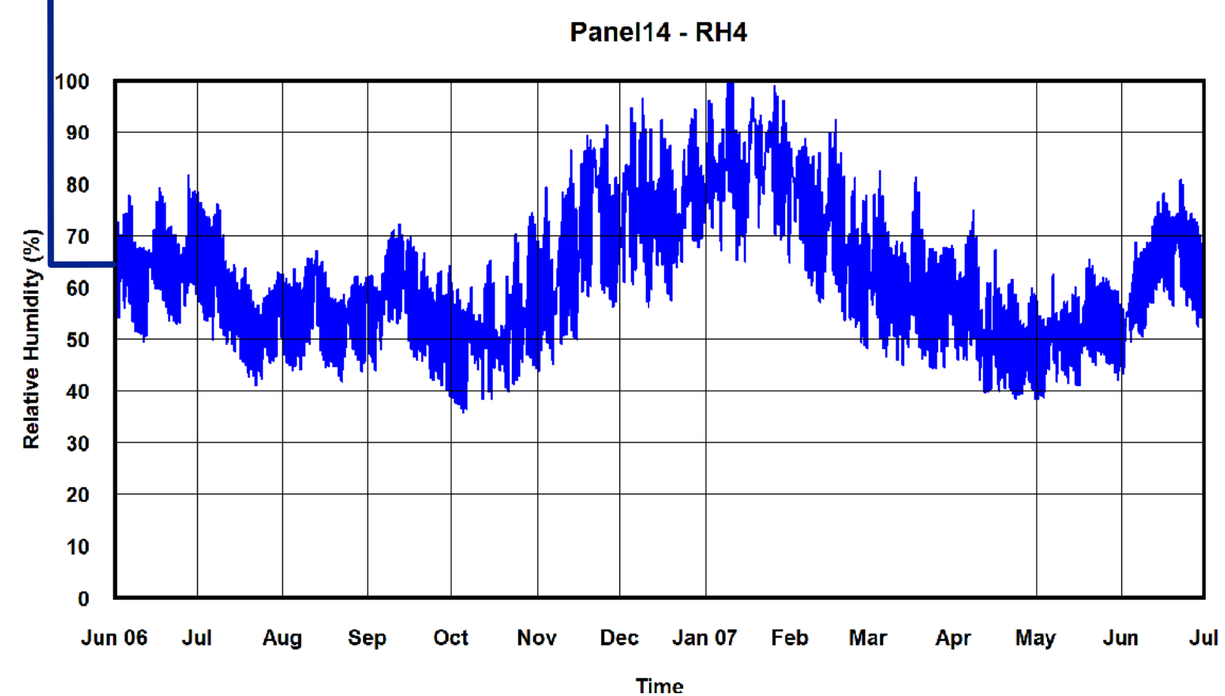
Panel14 - RH4
Relative Humidity (%)
100
90
80
70
60
50
40
30
20
10
0
Jun 06
Jul
Aug
Sep
Oct
Nov
Dec
Jan 07
Feb
Mar
Apr
May
Jun
Jul
Time

Panel 14

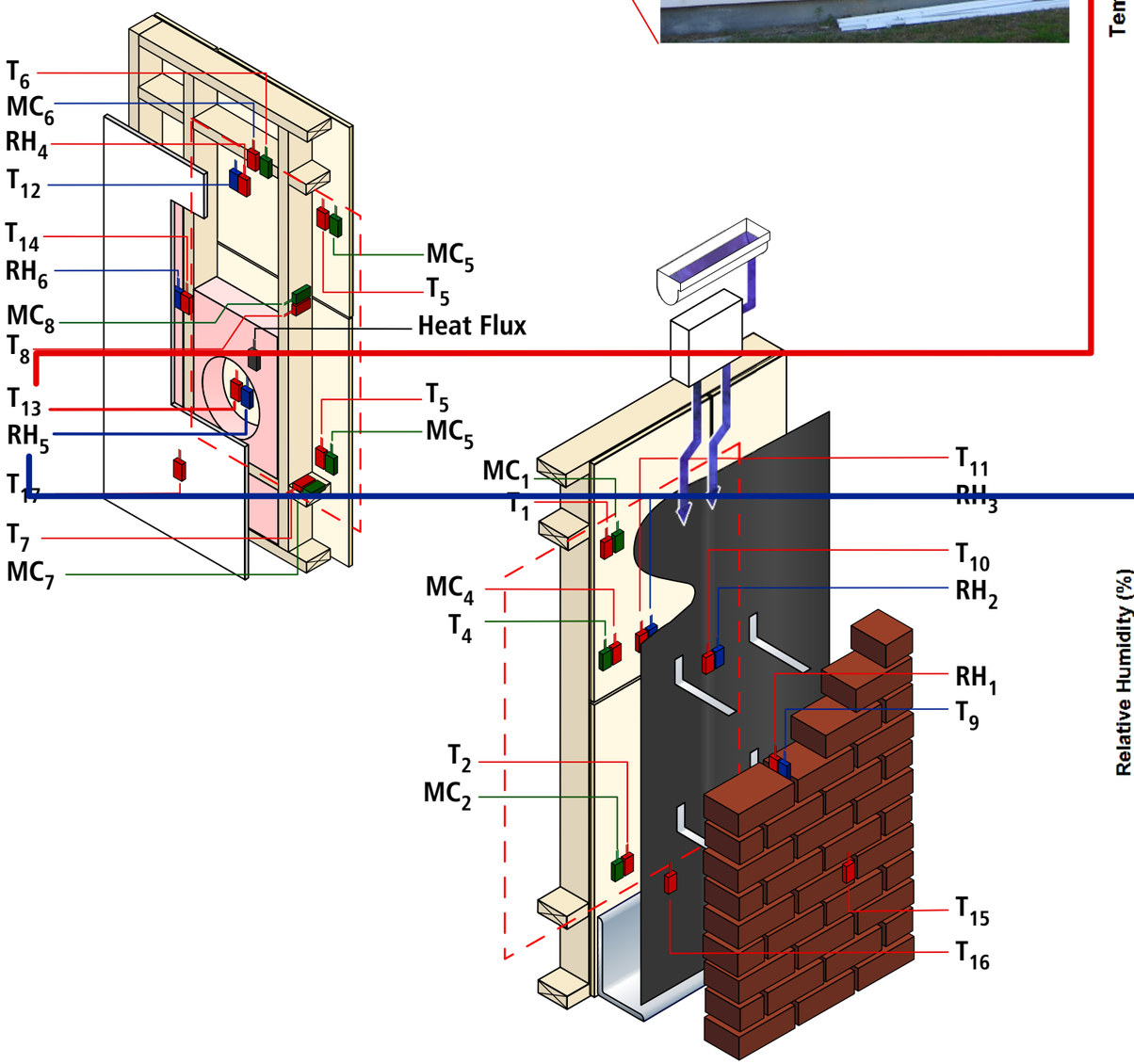
T_6
MC_6
RH_4
T_{12}
T_{14}
RH_6
MC_8
T_8
T_{13}
RH_5
T_{17}
T_7
MC_7
MC_5
T_5
Heat Flux
T_5
MC_5
MC_1
T_1
MC_4
T_4
T_2
MC_2
T_{11}
RH_3
T_{10}
RH_2
RH_1
T_9
T_{15}
T_{16}

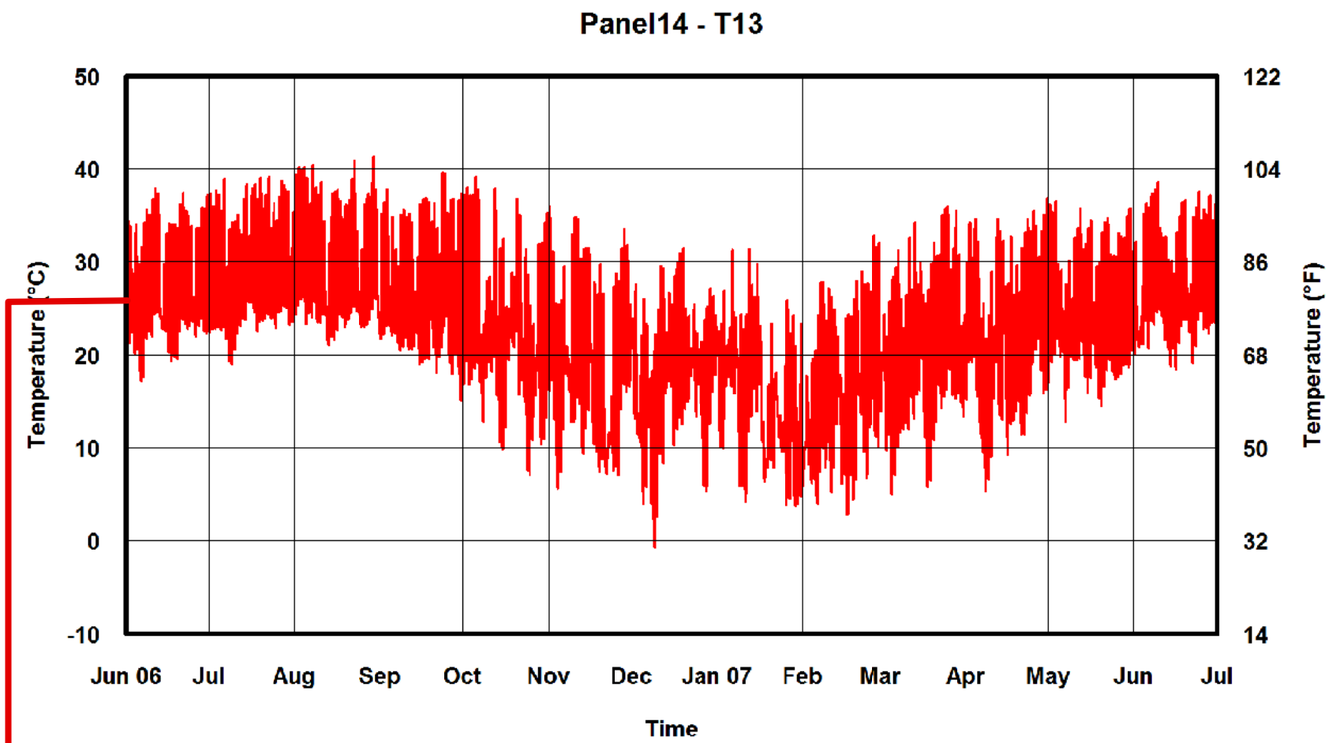
Panel14 - T13
Temperature (°C)
50
40
30
20
10
0
-10
Temperature (°F)
122
104
86
68
50
32
14
Jun 06
Jul
Aug
Sep
Oct
Nov
Dec
Jan 07
Feb
Mar
Apr
May
Jun
Jul
Time

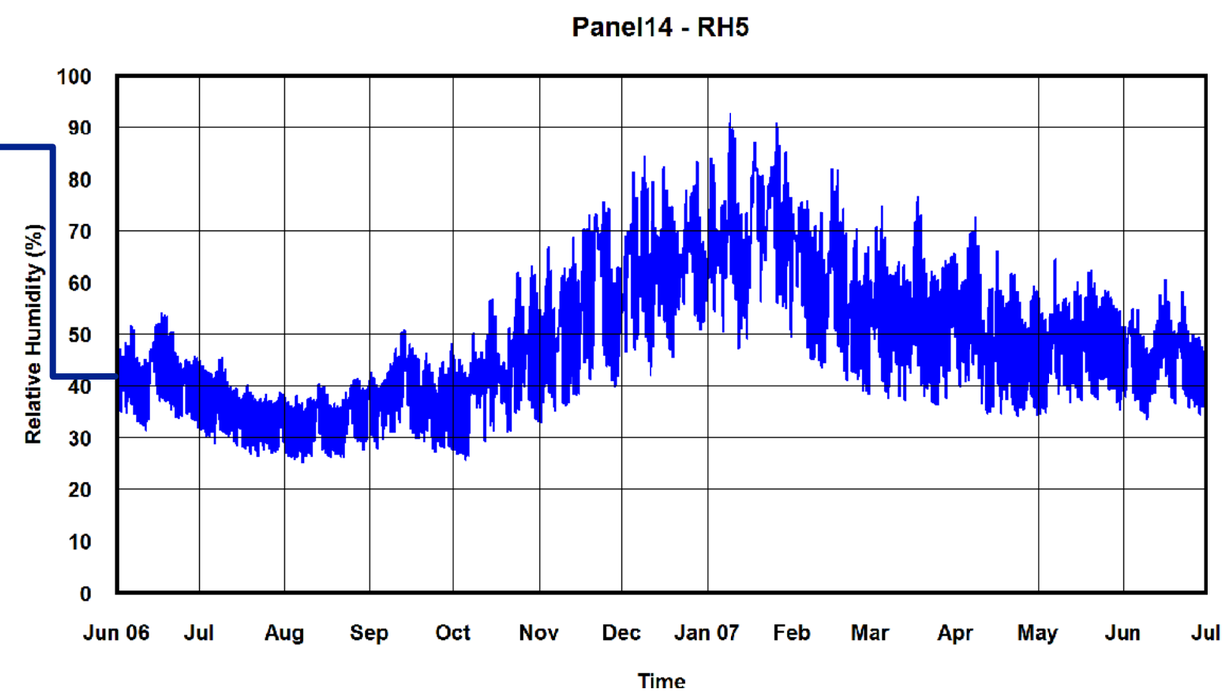
Panel14 - RH5
Relative Humidity (%)
100
90
80
70
60
50
40
30
20
10
0
Jun 06
Jul
Aug
Sep
Oct
Nov
Dec
Jan 07
Feb
Mar
Apr
May
Jun
Jul
Time

Panel 14

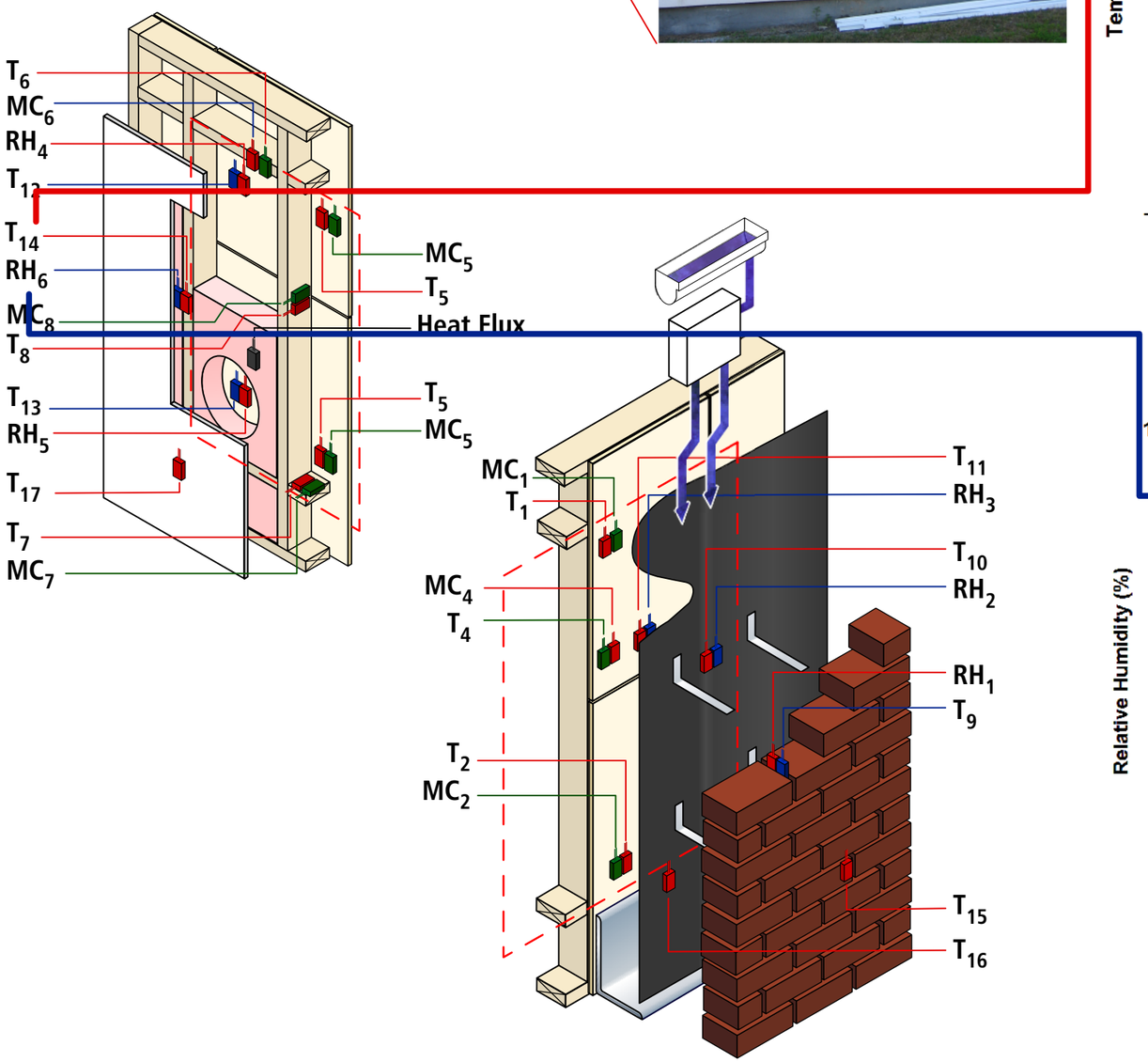
T_6
MC_6
RH_4
T_{12}
T_{14}
RH_6
MC_8
T_8
T_{13}
RH_5
T_{17}
T_7
MC_7
MC_5
T_5
Heat Flux
T_5
MC_5
MC_1
T_1
MC_4
T_4
T_2
MC_2
T_{11}
RH_3
T_{10}
RH_2
RH_1
T_9
T_{15}
T_{16}

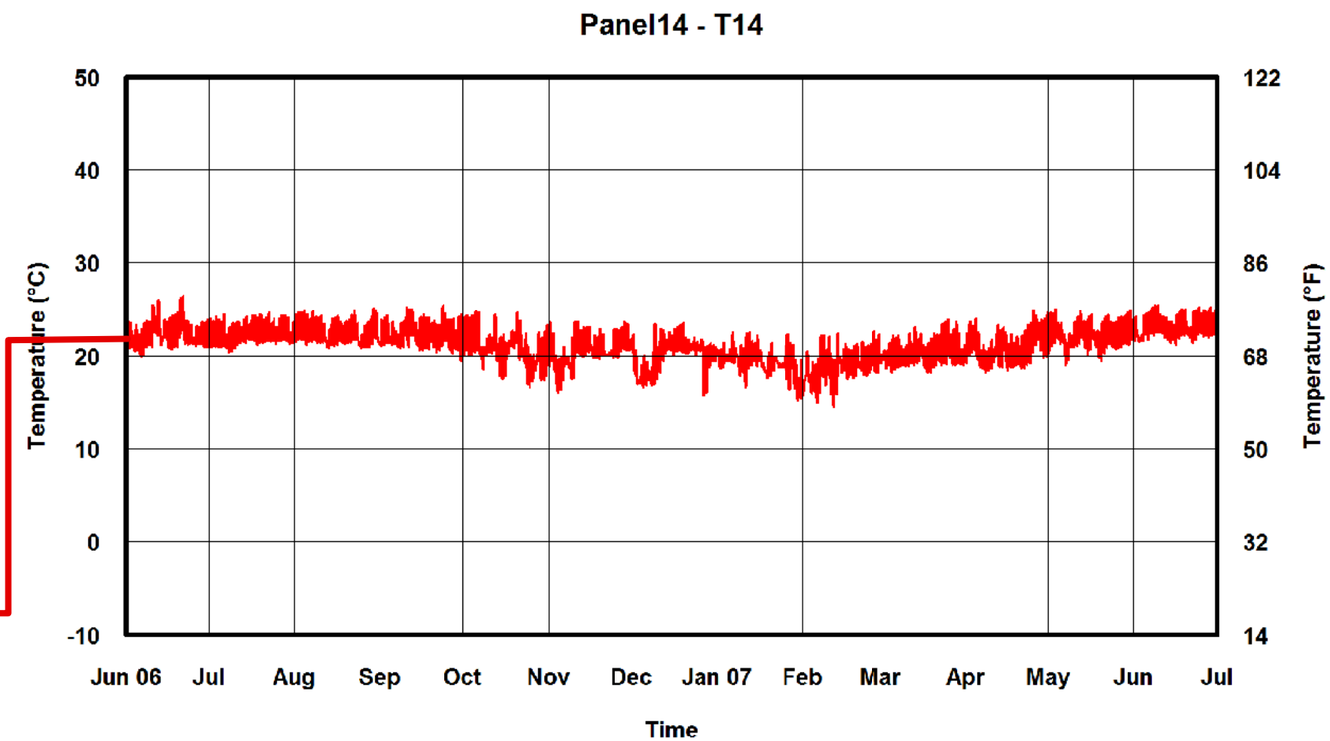
Panel14 - T14
Temperature (°C)
Temperature (°F)
50
40
30
20
10
0
-10
122
104
86
68
50
32
14
Jun 06
Jul
Aug
Sep
Oct
Nov
Dec
Jan 07
Feb
Mar
Apr
May
Jun
Jul
Time

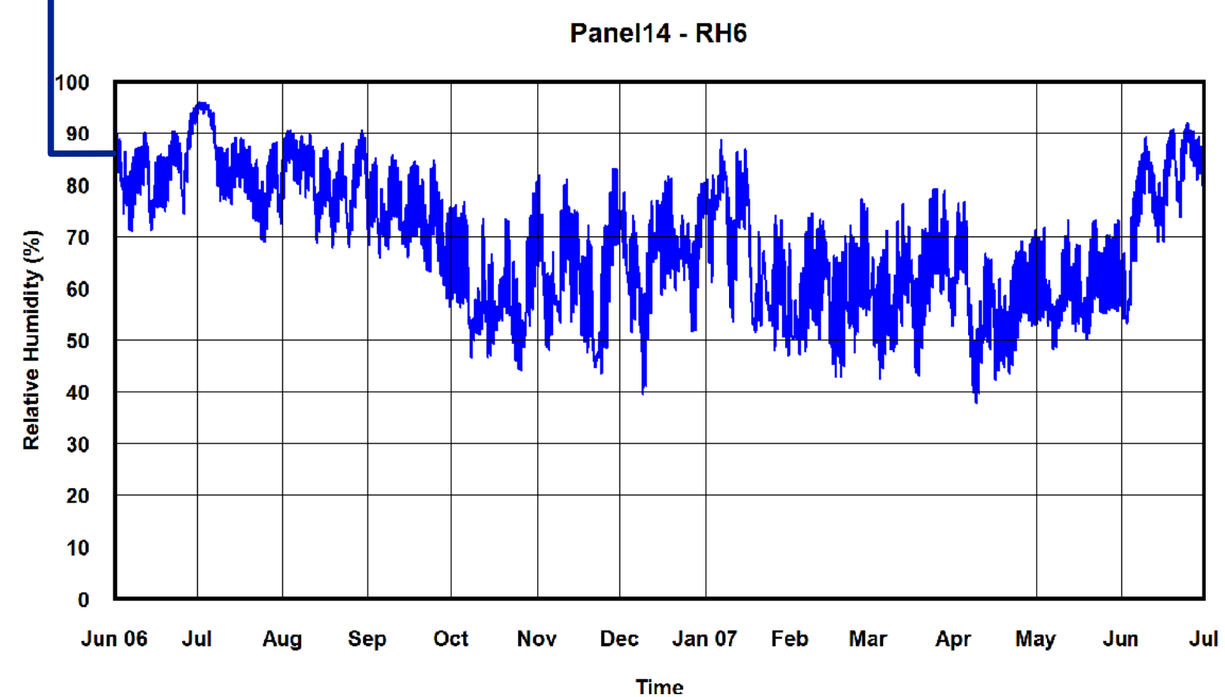
Panel14 - RH6
Relative Humidity (%)
100
90
80
70
60
50
40
30
20
10
0
Jun 06
Jul
Aug
Sep
Oct
Nov
Dec
Jan 07
Feb
Mar
Apr
May
Jun
Jul
Time

Panel 14

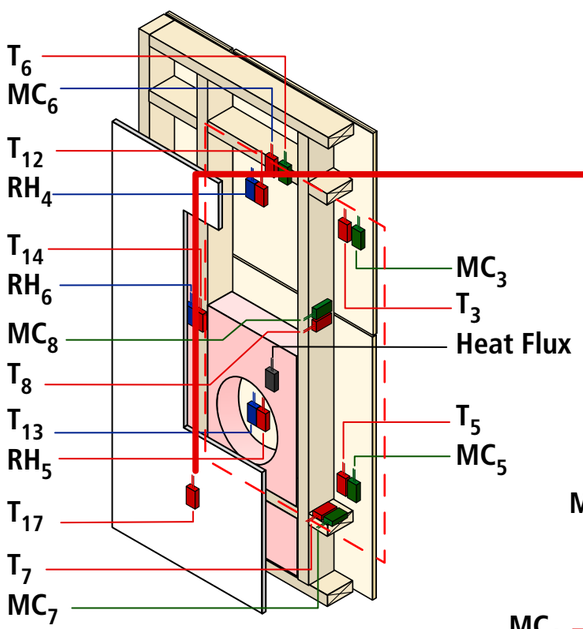
T_6
MC_6
T_{12}
RH_4
T_{14}
RH_6
MC_8
T_8
T_{13}
RH_5
T_{17}
T_7
MC_7
MC_3
T_3
Heat Flux
T_5
MC_5

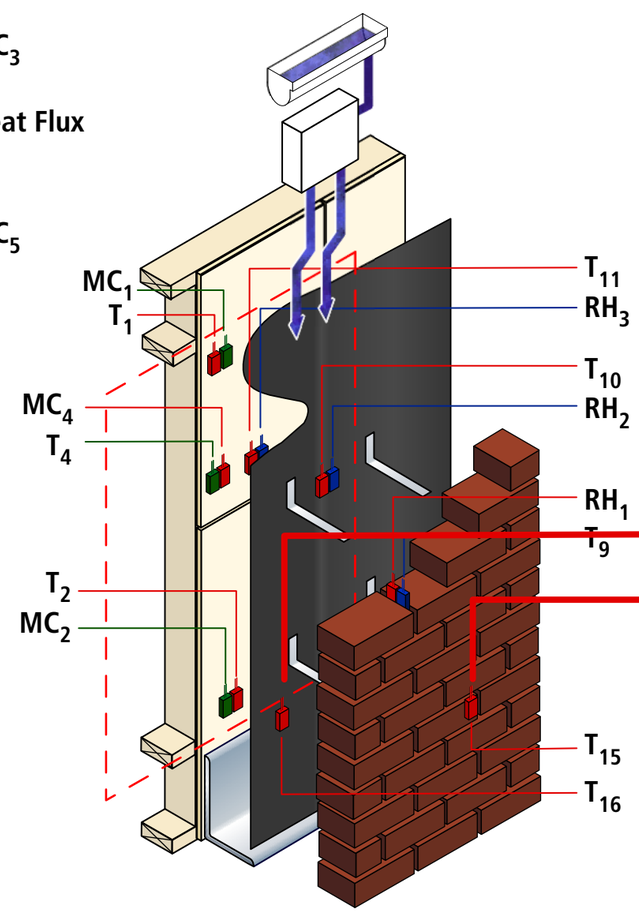
MC_1
T_1
MC_4
T_4
T_2
MC_2
T_{11}
RH_3
T_{10}
RH_2
RH_1
T_9
T_{15}
T_{16}

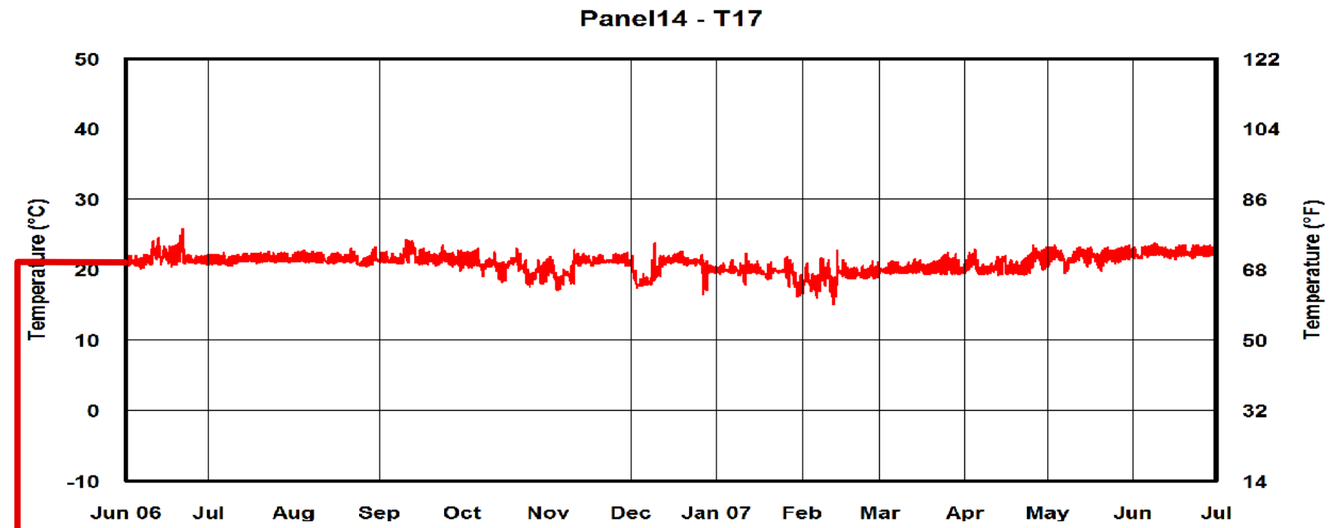
Panel14 - T17
Temperature (°C)
Temperature (°F)
50
40
30
20
10
0
-10
122
104
86
68
50
32
14
Jun 06
Jul
Aug
Sep
Oct
Nov
Dec
Jan 07
Feb
Mar
Apr
May
Jun
Jul

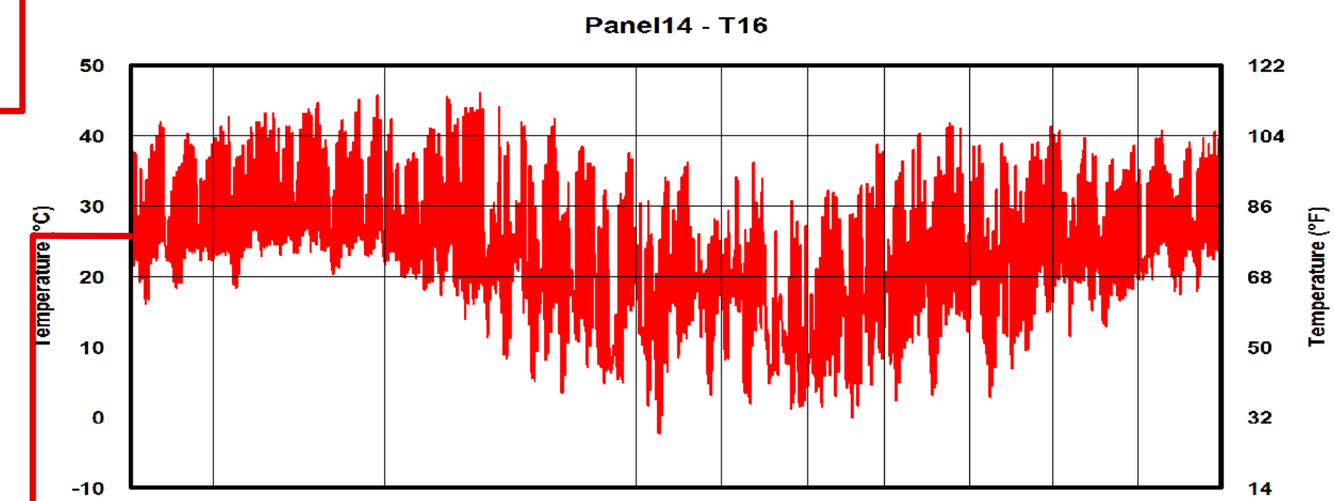
Panel14 - T16
Temperature (°C)
Temperature (°F)
50
40
30
20
10
0
-10
122
104
86
68
50
32
14

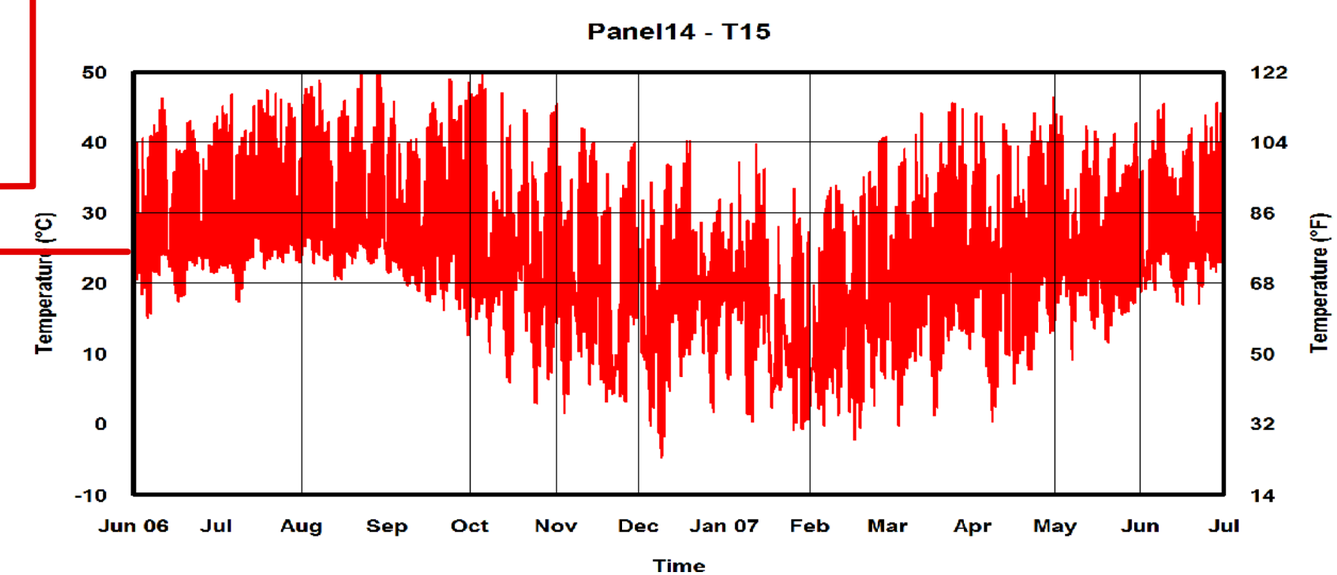
Panel14 - T15
Temperature (°C)
Temperature (°F)
50
40
30
20
10
0
-10
122
104
86
68
50
32
14
Jun 06
Jul
Aug
Sep
Oct
Nov
Dec
Jan 07
Feb
Mar
Apr
May
Jun
Jul
Time

Panel 14

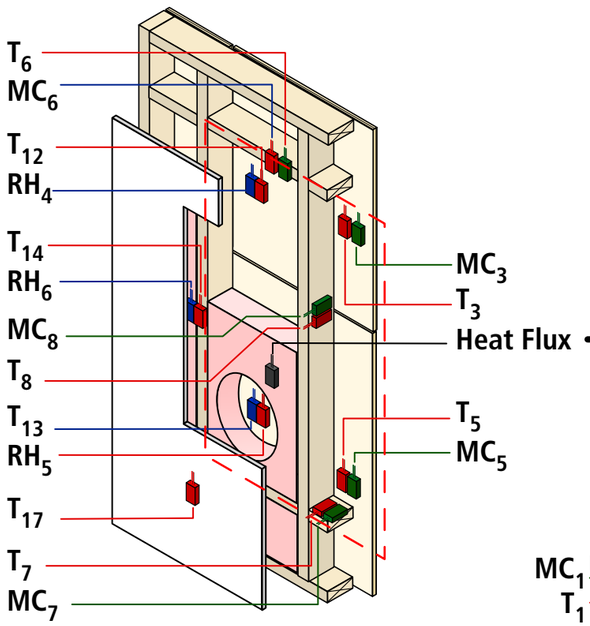
T_6
MC_6
T_{12}
RH_4
T_{14}
RH_6
MC_8
T_8
T_{13}
RH_5
T_{17}
T_7
MC_7
MC_3
T_3
Heat Flux
T_5
MC_5

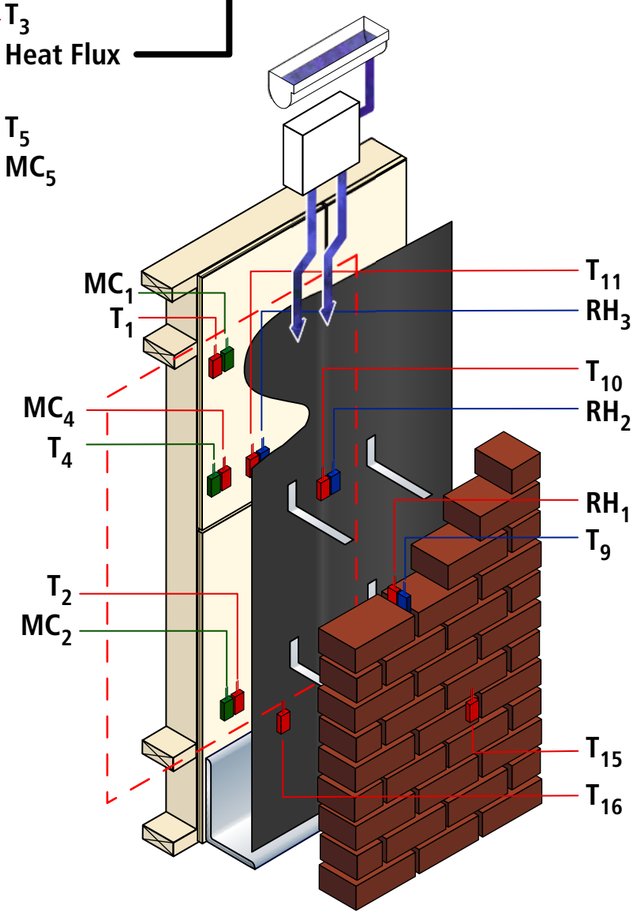
MC_1
T_1
MC_4
T_4
T_2
MC_2
T_{11}
RH_3
T_{10}
RH_2
RH_1
T_9
T_{15}
T_{16}

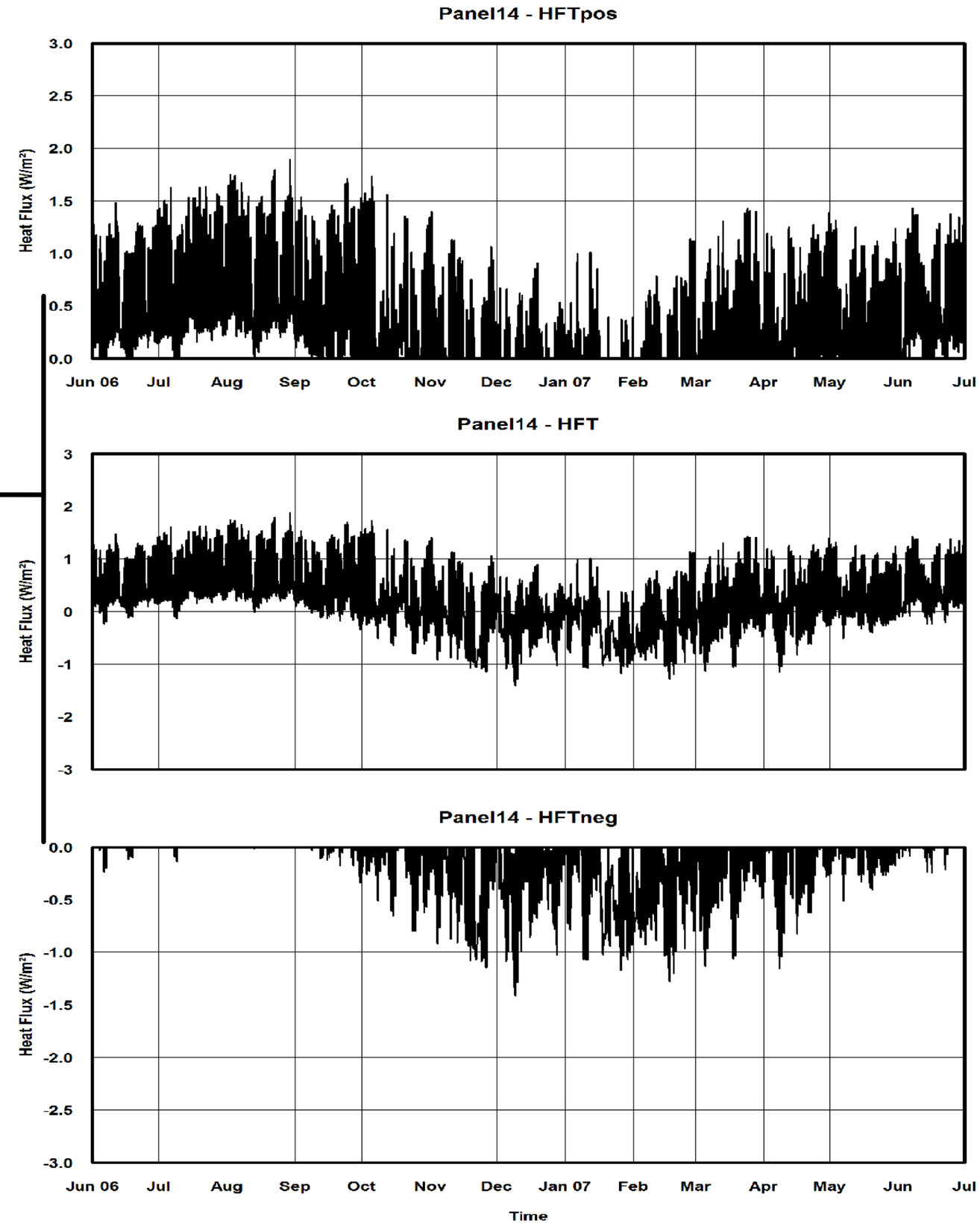
Panel14 - HFTpos
Panel14 - HFT
Panel14 - HFTneg
Heat Flux (W/m²)
3.0
2.5
2.0
1.5
1.0
0.5
0.0
3
2
1
0
-1
-2
-3
-0.5
-1.0
-1.5
-2.0
-2.5
-3.0
Jun 06
Jul
Aug
Sep
Oct
Nov
Dec
Jan 07
Feb
Mar
Apr
May
Jun
Jul
Time

Panel 15

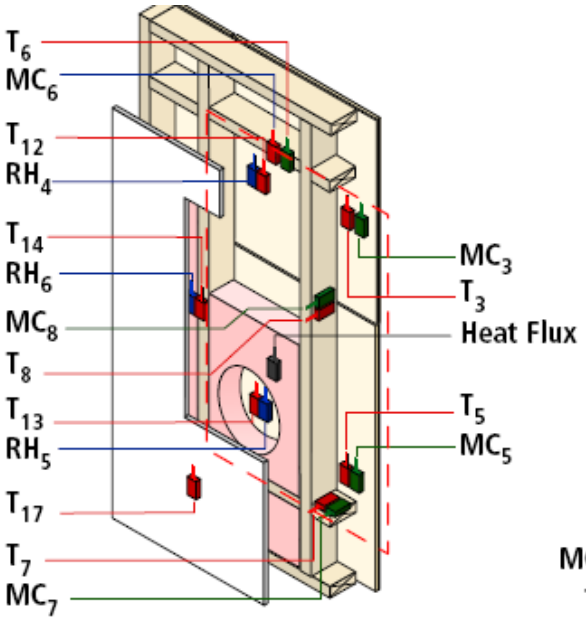
T_6
MC_6
T_{12}
RH_4
T_{14}
RH_6
MC_8
T_8
T_{13}
RH_5
T_{17}
T_7
MC_7
MC_3
T_3
Heat Flux
T_5
MC_5

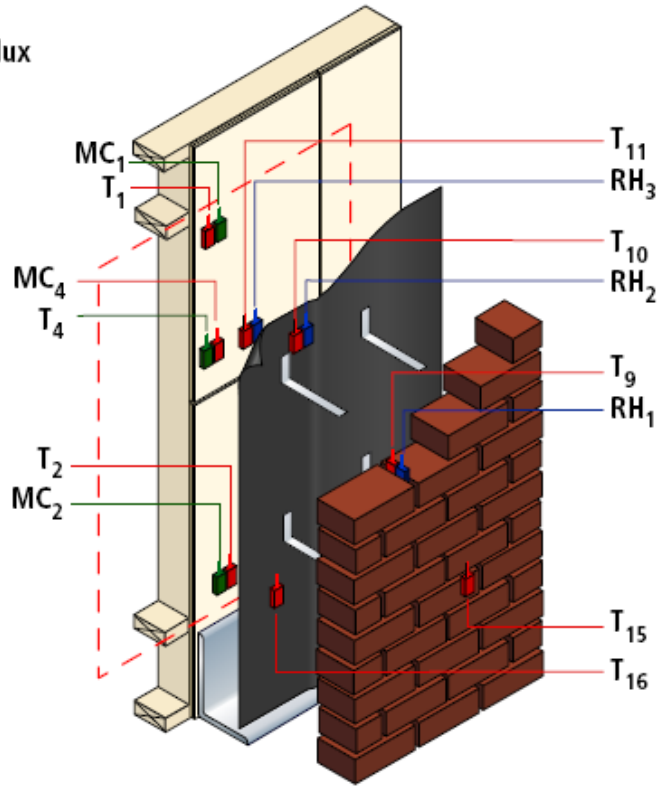
MC_1
T_1
MC_4
T_4
T_2
MC_2
T_{11}
RH_3
T_{10}
RH_2
T_9
RH_1
T_{15}
T_{16}

Panel 15

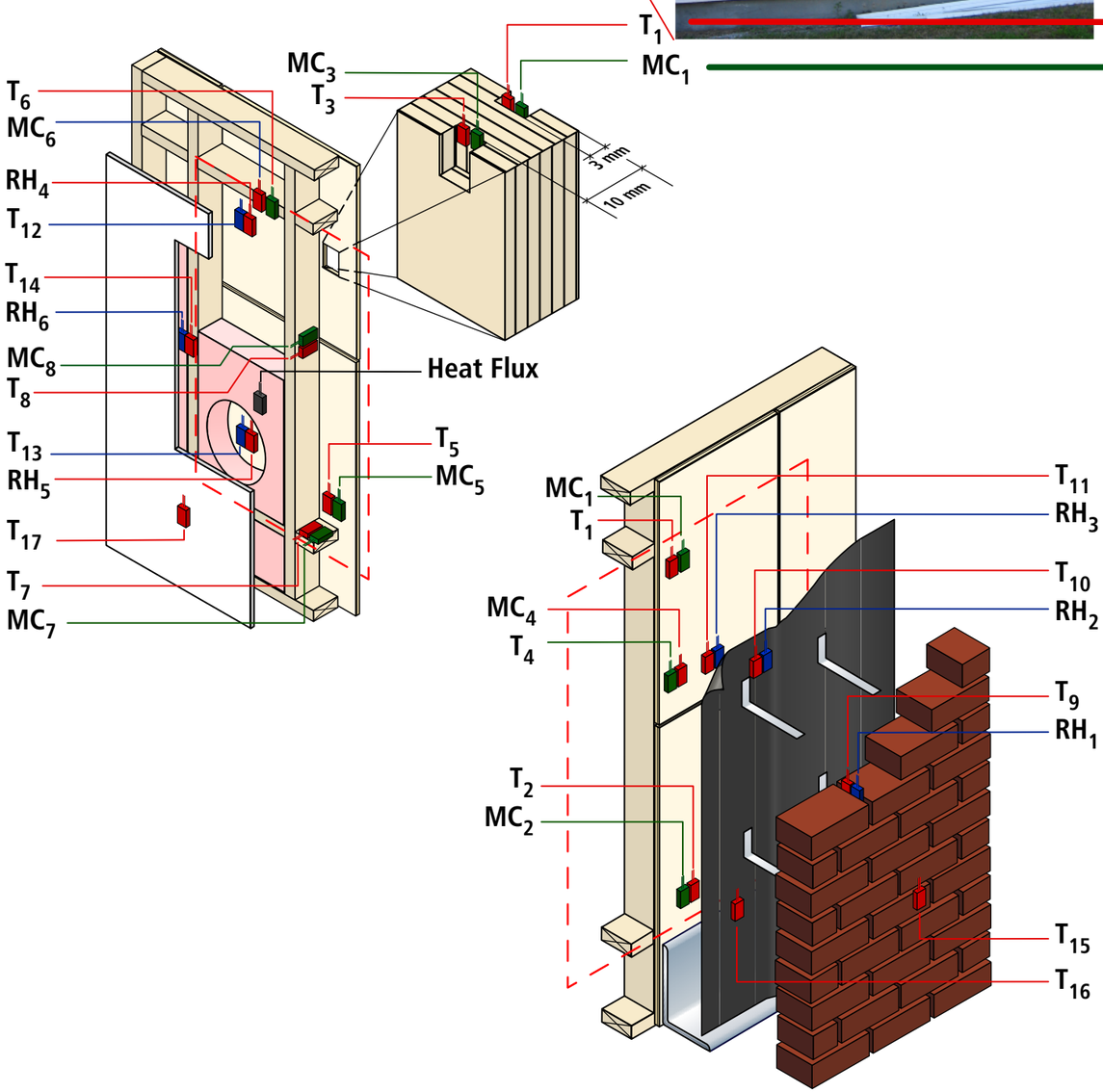
T_1
MC_1
MC_3
T_3
T_6
MC_6
RH_4
T_{12}
T_{14}
RH_6
MC_8
T_8
T_{13}
RH_5
T_{17}
T_7
MC_7
3 mm
10 mm
Heat Flux
T_5
MC_5
MC_1
T_1
MC_4
T_4
T_2
MC_2
T_{11}
RH_3
T_{10}
RH_2
T_9
RH_1
T_{15}
T_{16}

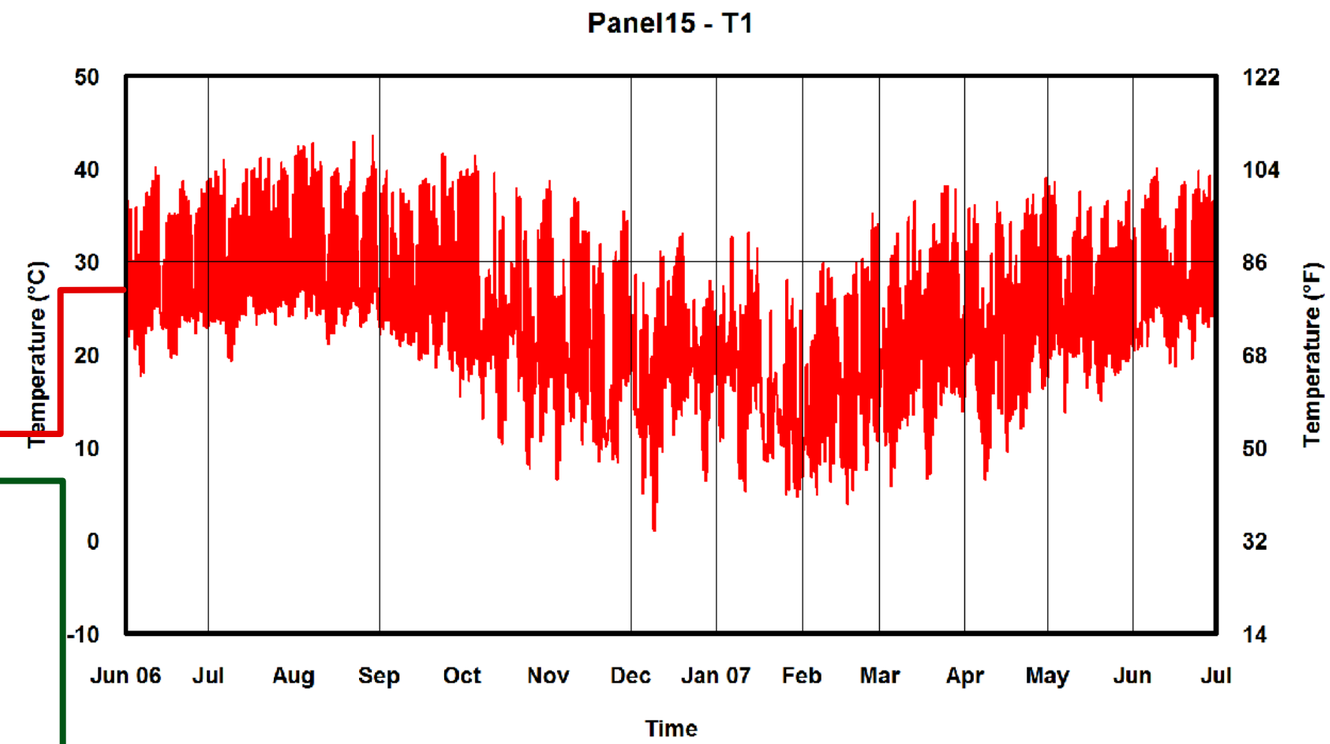
Panel15 - T1
Temperature (°C)
Temperature (°F)
50
40
30
20
10
0
-10
122
104
86
68
50
32
14
Jun 06
Jul
Aug
Sep
Oct
Nov
Dec
Jan 07
Feb
Mar
Apr
May
Jun
Jul
Time

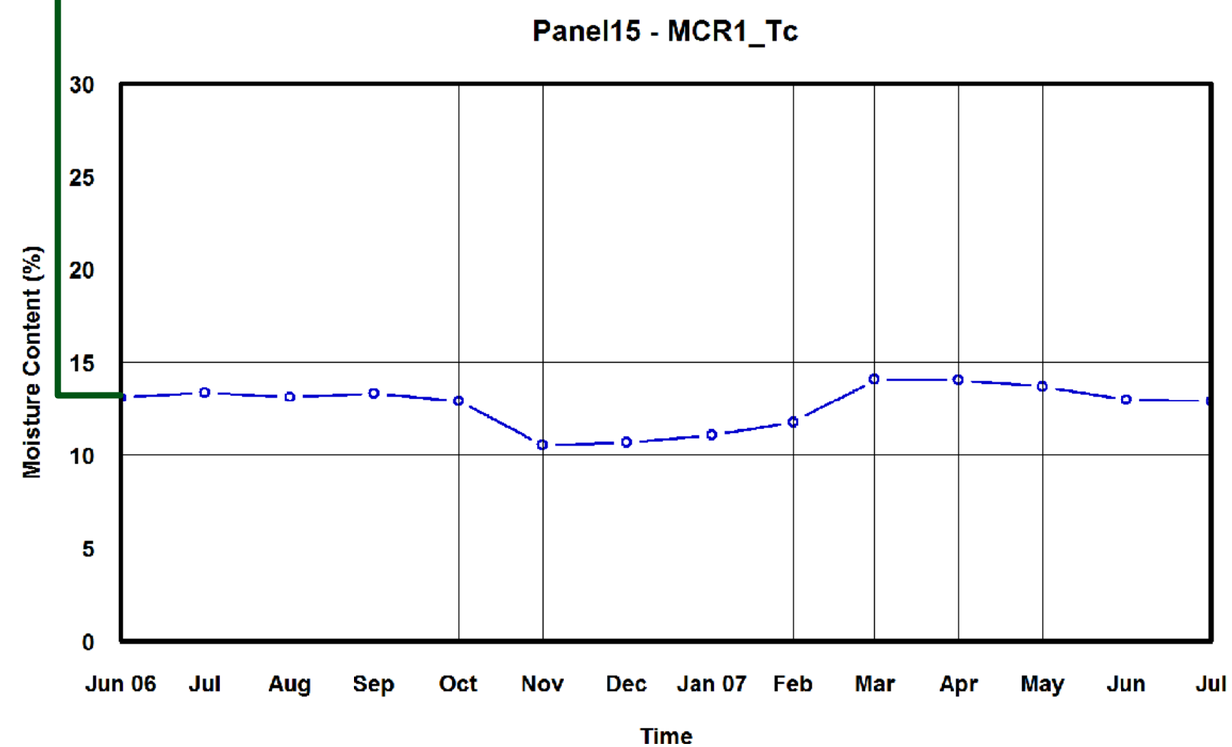
Panel15 - MCR1_Tc
Moisture Content (%)
30
25
20
15
10
5
0
Jun 06
Jul
Aug
Sep
Oct
Nov
Dec
Jan 07
Feb
Mar
Apr
May
Jun
Jul
Time

Panel 15

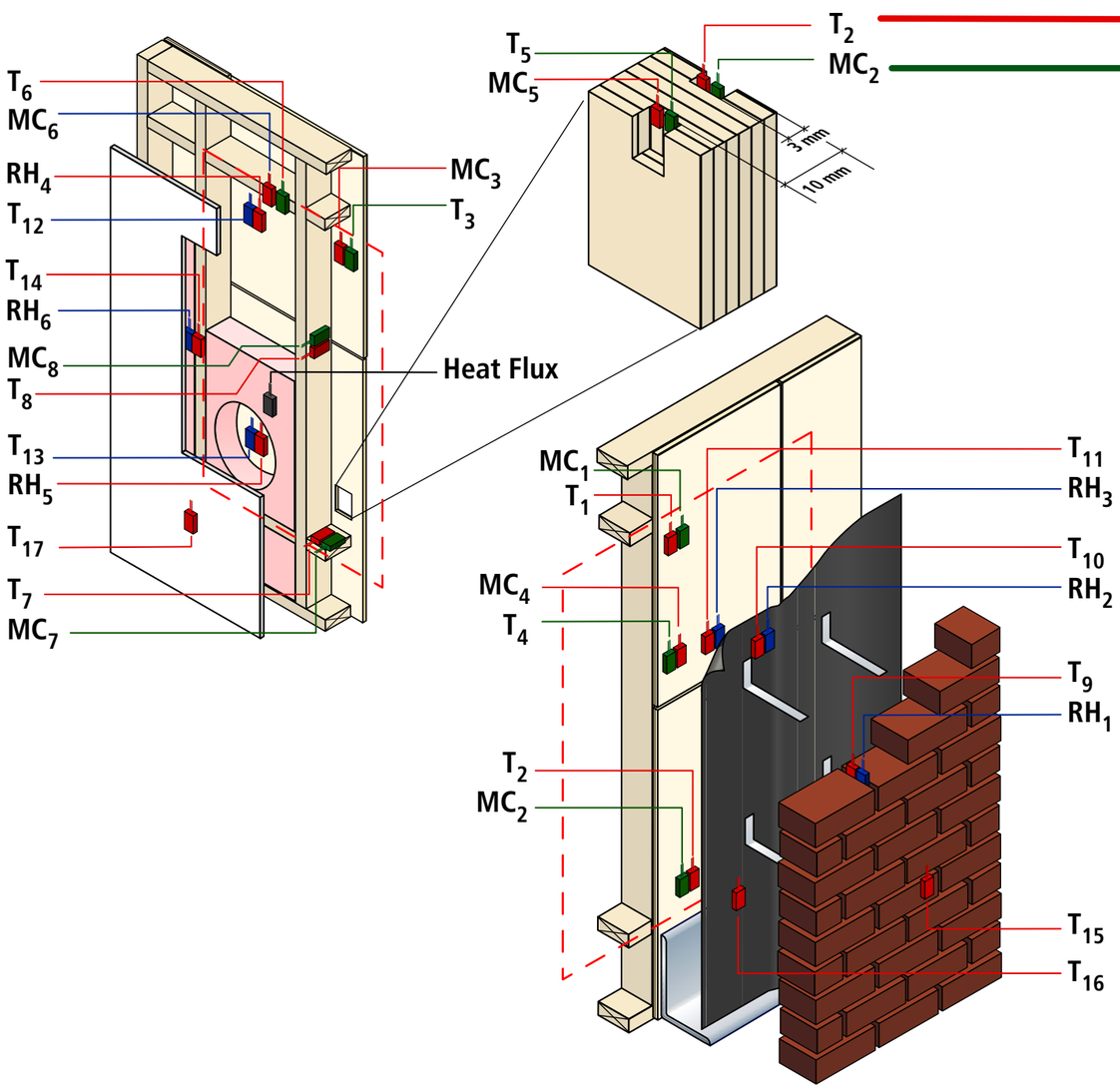
T_6
MC_6
RH_4
T_{12}
T_{14}
RH_6
MC_8
T_8
T_{13}
RH_5
T_{17}
T_7
MC_7
MC_3
T_3
Heat Flux
T_5
MC_5
T_2
MC_2
3 mm
10 mm
MC_1
T_1
MC_4
T_4
T_2
MC_2
T_{11}
RH_3
T_{10}
RH_2
T_9
RH_1
T_{15}
T_{16}

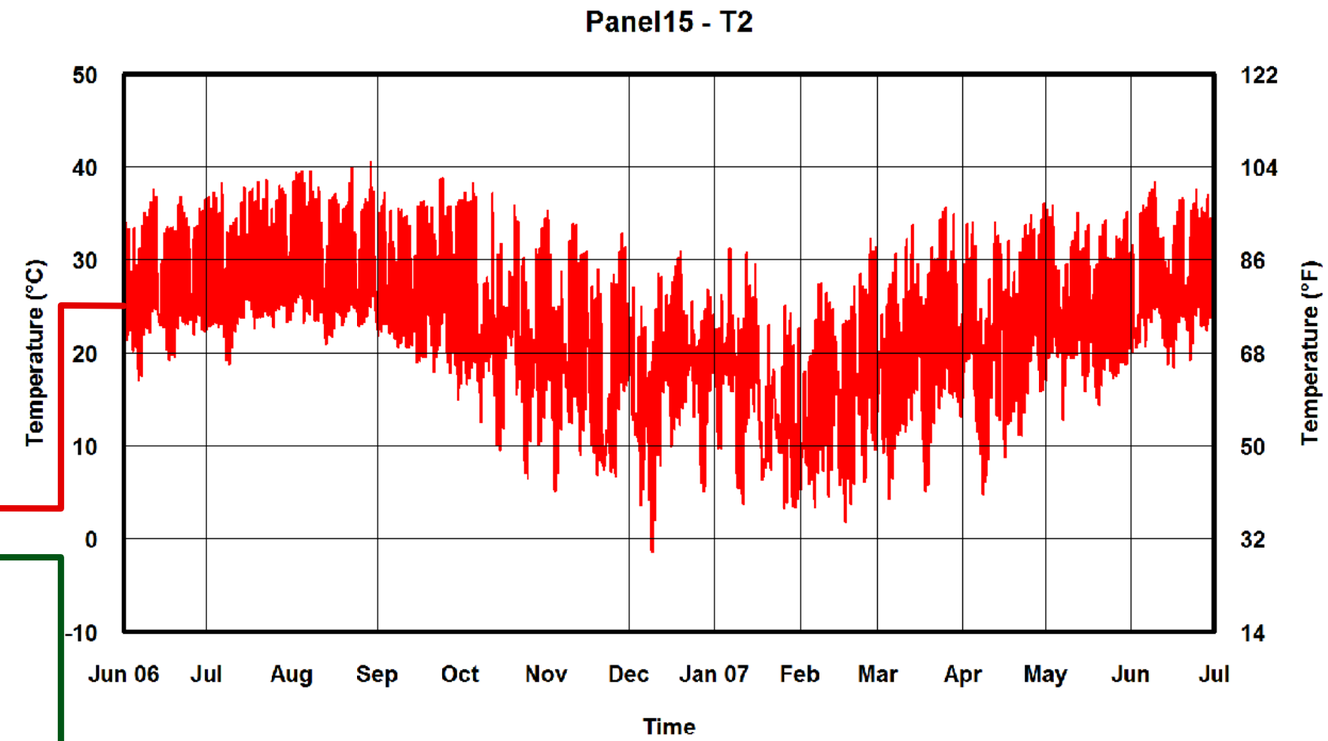
Panel15 - T2
Temperature (°C)
Temperature (°F)
50
40
30
20
10
0
-10
122
104
86
68
50
32
14
Jun 06
Jul
Aug
Sep
Oct
Nov
Dec
Jan 07
Feb
Mar
Apr
May
Jun
Jul
Time

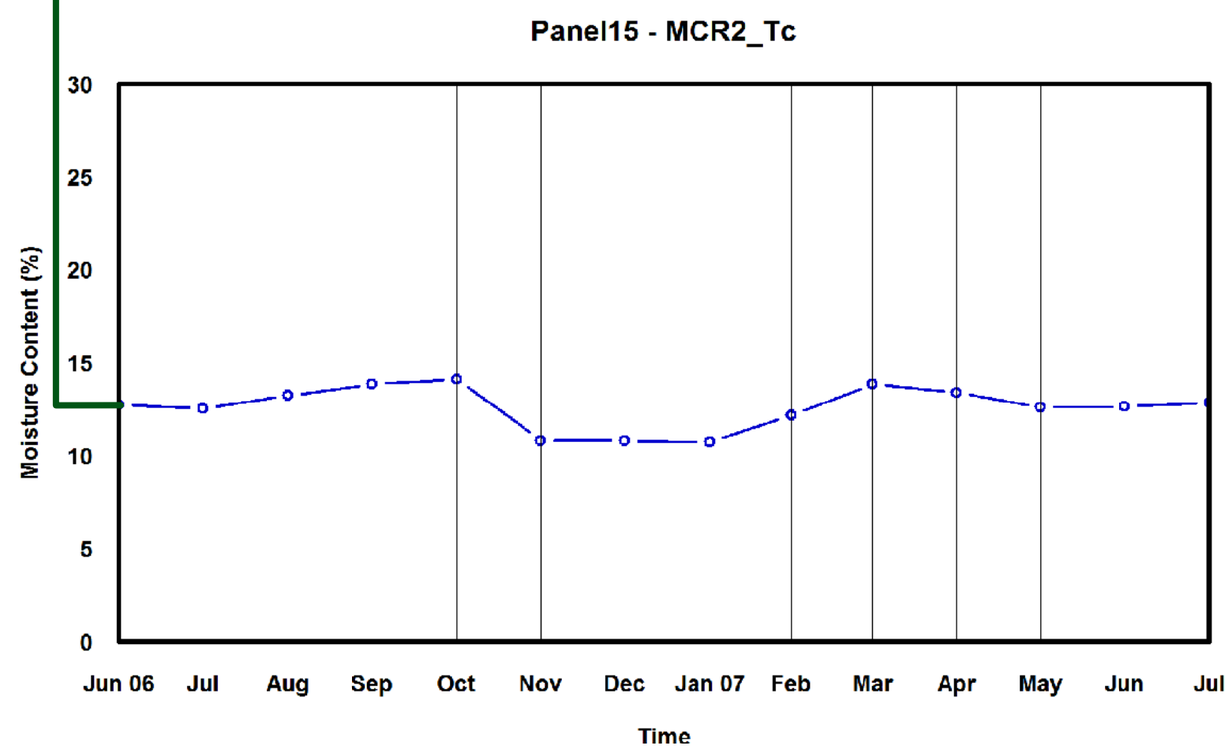
Panel15 - MCR2_Tc
Moisture Content (%)
30
25
20
15
10
5
0
Jun 06
Jul
Aug
Sep
Oct
Nov
Dec
Jan 07
Feb
Mar
Apr
May
Jun
Jul
Time

Panel 15

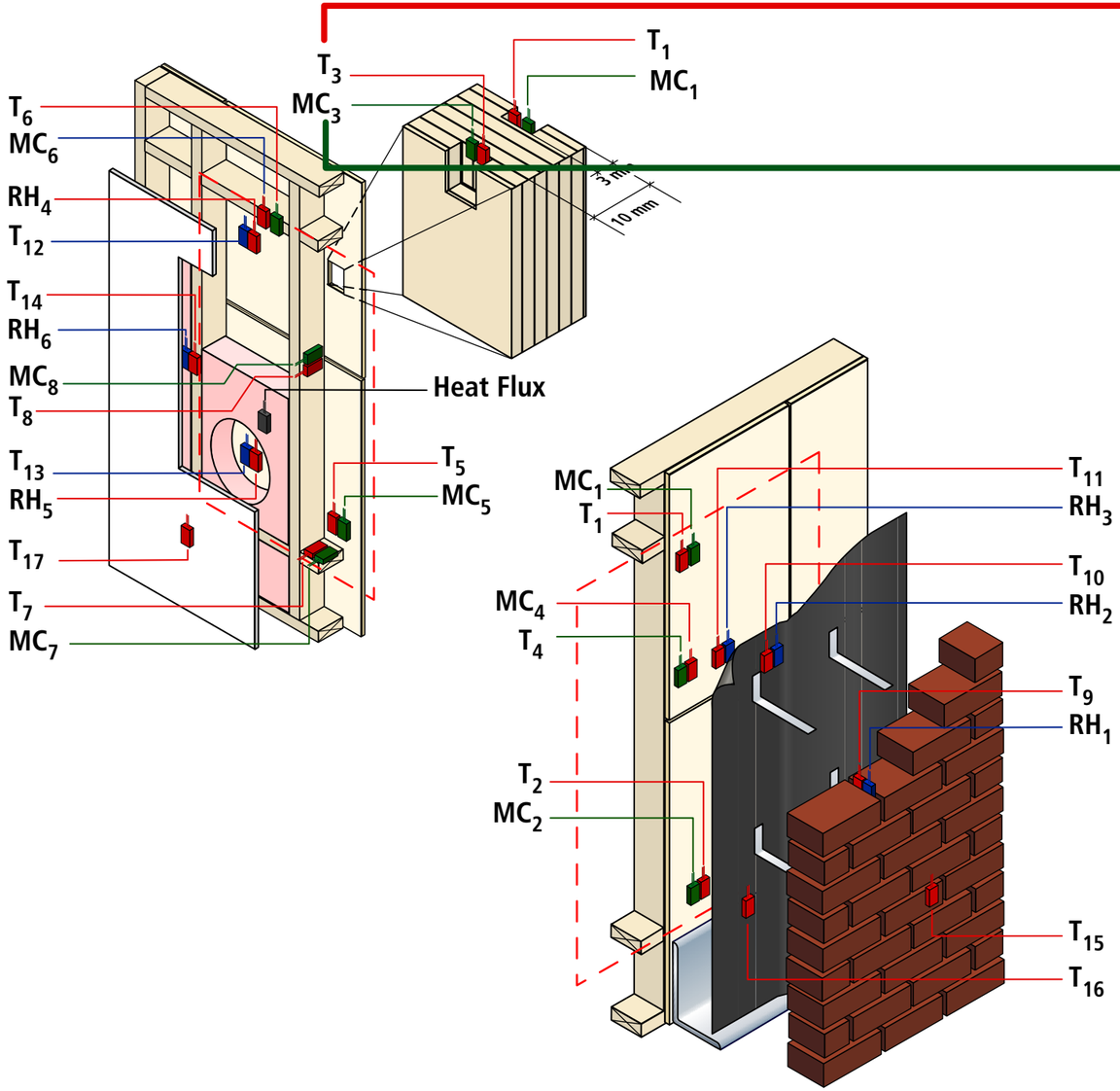
T3
MC3
T1
MC1
T6
MC6
RH4
T12
T14
RH6
MC8
T8
Heat Flux
T13
RH5
T5
MC5
T17
T7
MC7
33 mm
10 mm
MC1
T1
MC4
T4
T2
MC2
T11
RH3
T10
RH2
T9
RH1
T15
T16

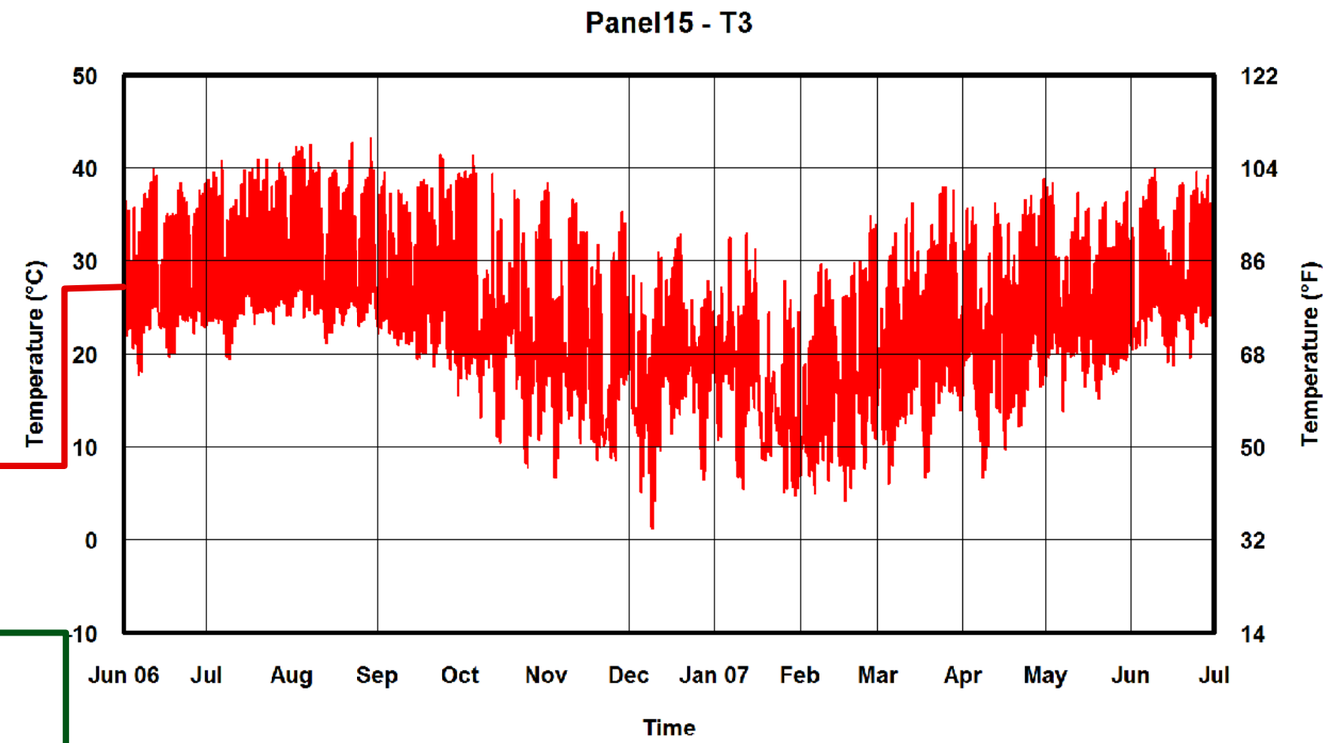
Panel15 - T3
Temperature (°C)
Temperature (°F)
50
40
30
20
10
0
-10
122
104
86
68
50
32
14
Jun 06
Jul
Aug
Sep
Oct
Nov
Dec
Jan 07
Feb
Mar
Apr
May
Jun
Jul
Time

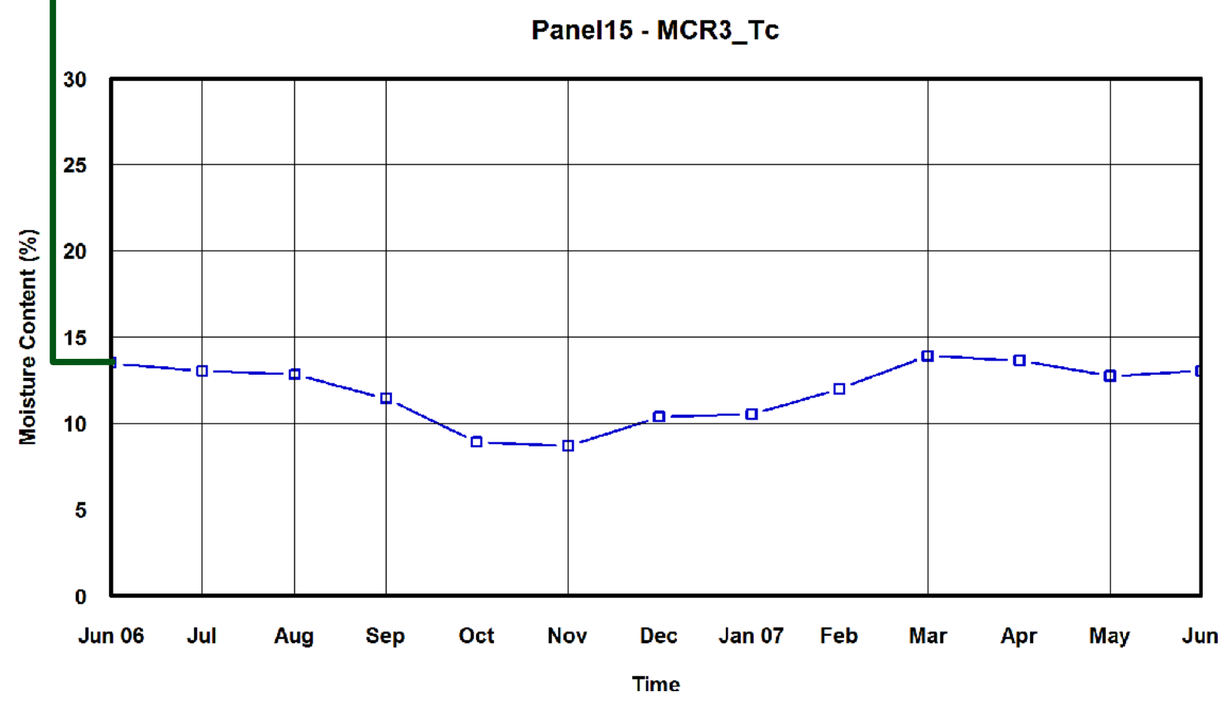
Panel15 - MCR3_Tc
Moisture Content (%)
30
25
20
15
10
5
0
Jun 06
Jul
Aug
Sep
Oct
Nov
Dec
Jan 07
Feb
Mar
Apr
May
Jun
Time

Panel 15

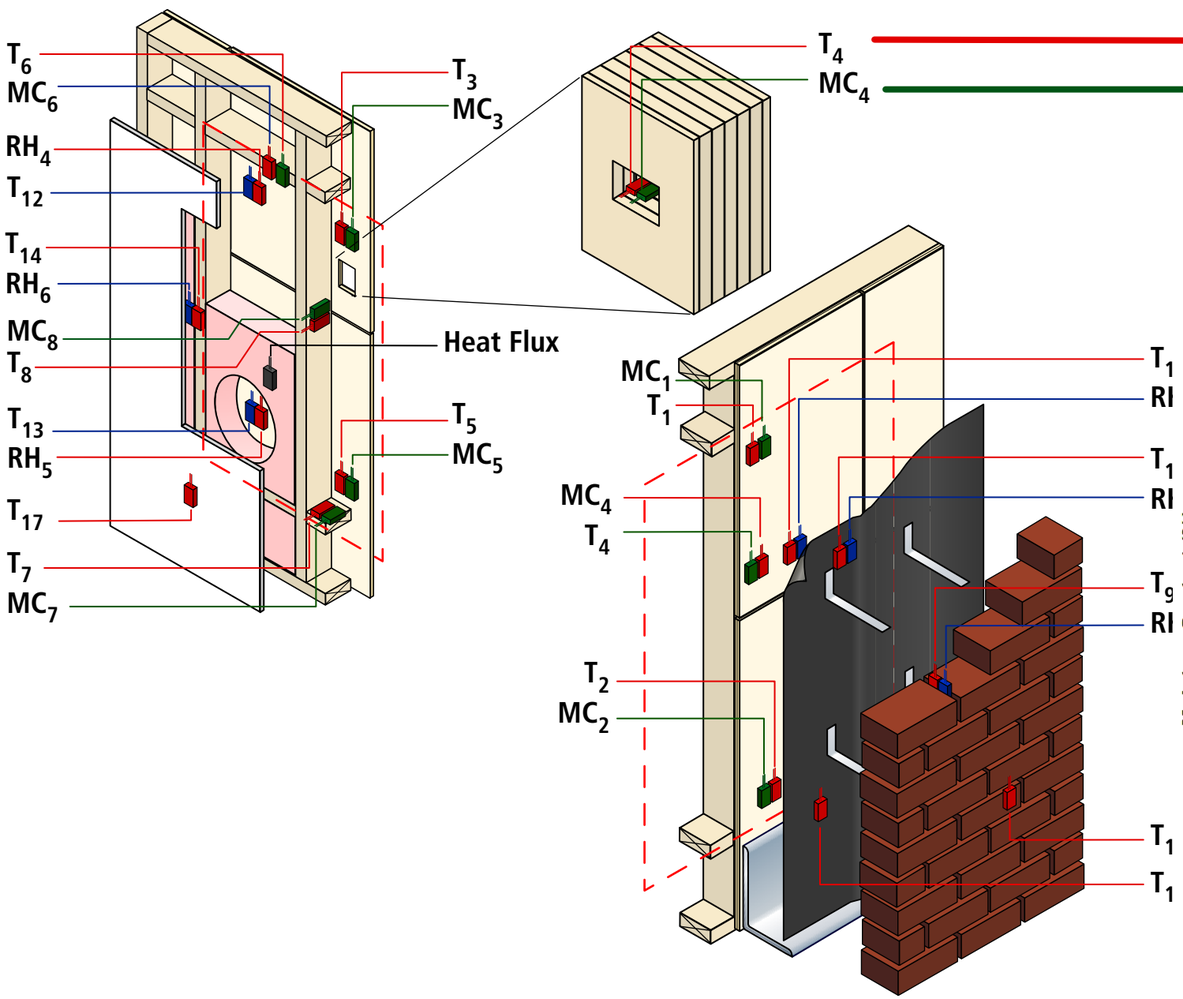
T_6
MC_6
RH_4
T_{12}
T_{14}
RH_6
MC_8
T_8
T_{13}
RH_5
T_{17}
T_7
MC_7
T_3
MC_3
Heat Flux
T_5
MC_5
T_4
MC_4
MC_1
T_1
MC_4
T_4
T_2
MC_2
T_1
RI
T_1
RI
T_9
RI
T_1
T_1

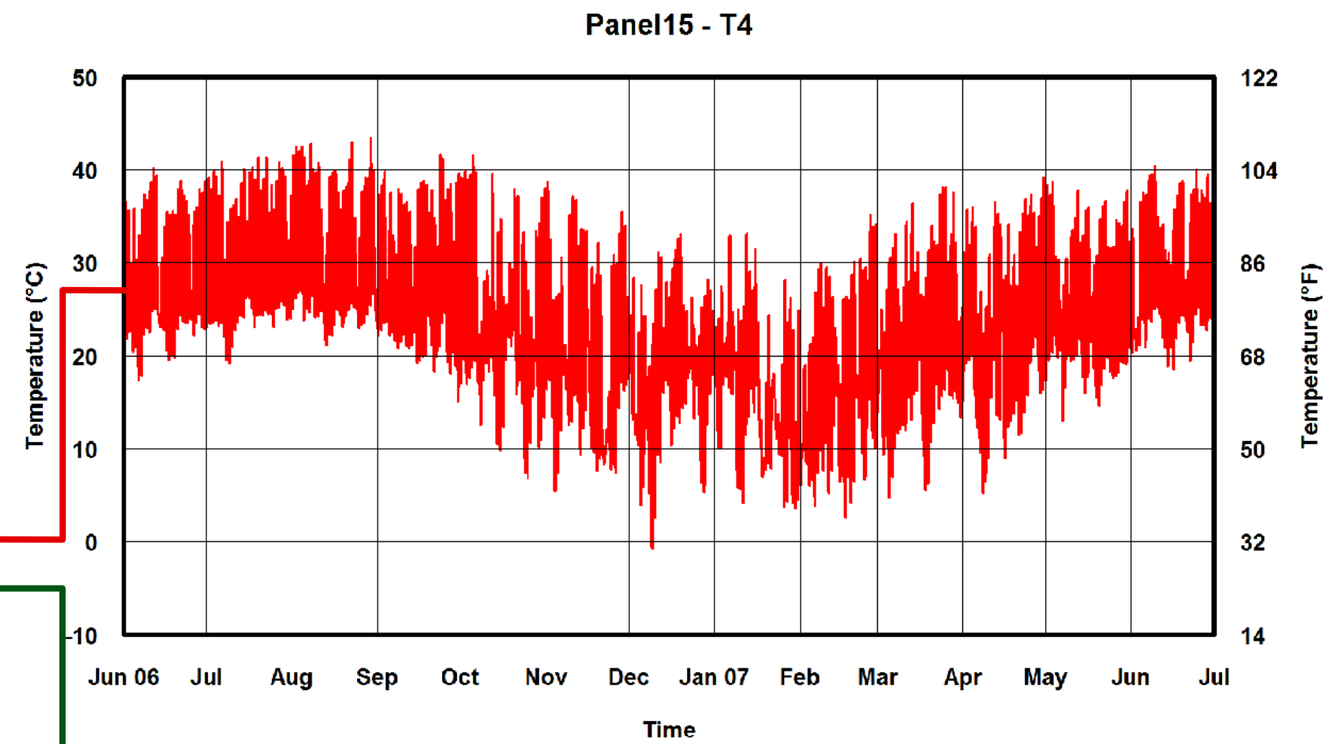
Panel15 - T4
Temperature (°C)
Temperature (°F)
50
40
30
20
10
0
-10
122
104
86
68
50
32
14
Jun 06
Jul
Aug
Sep
Oct
Nov
Dec
Jan 07
Feb
Mar
Apr
May
Jun
Jul
Time

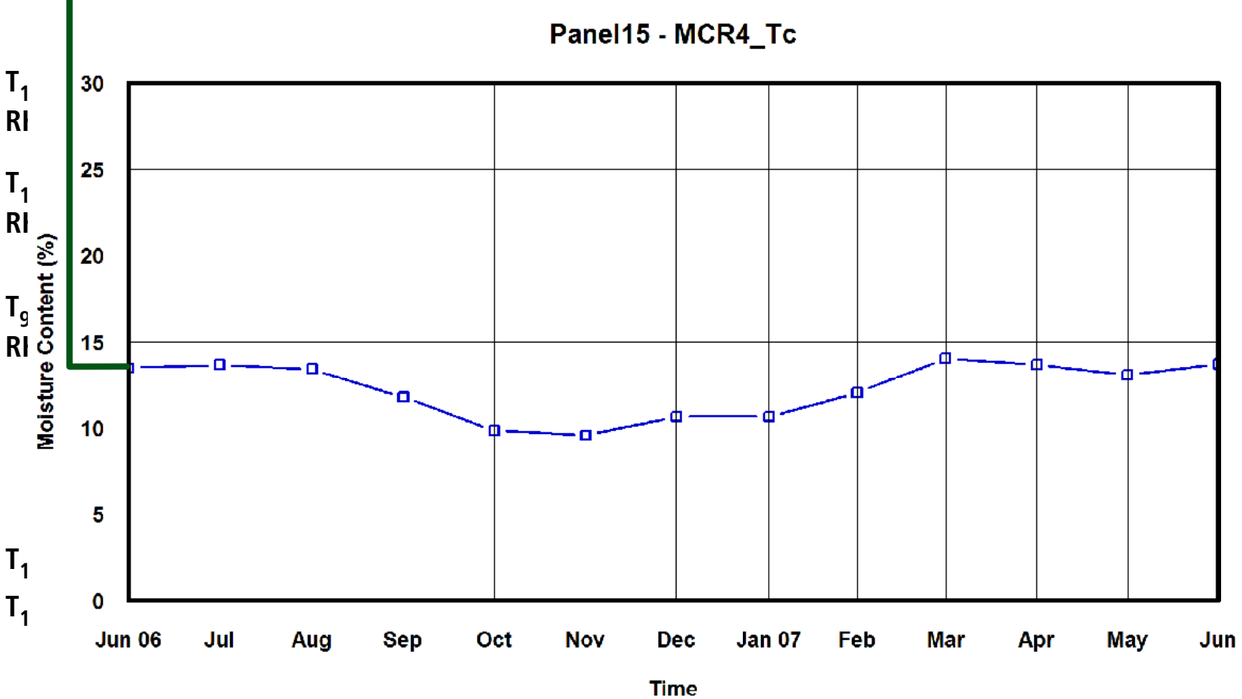
Panel15 - MCR4_Tc
Moisture Content (%)
30
25
20
15
10
5
0
Jun 06
Jul
Aug
Sep
Oct
Nov
Dec
Jan 07
Feb
Mar
Apr
May
Jun
Time

Panel 15

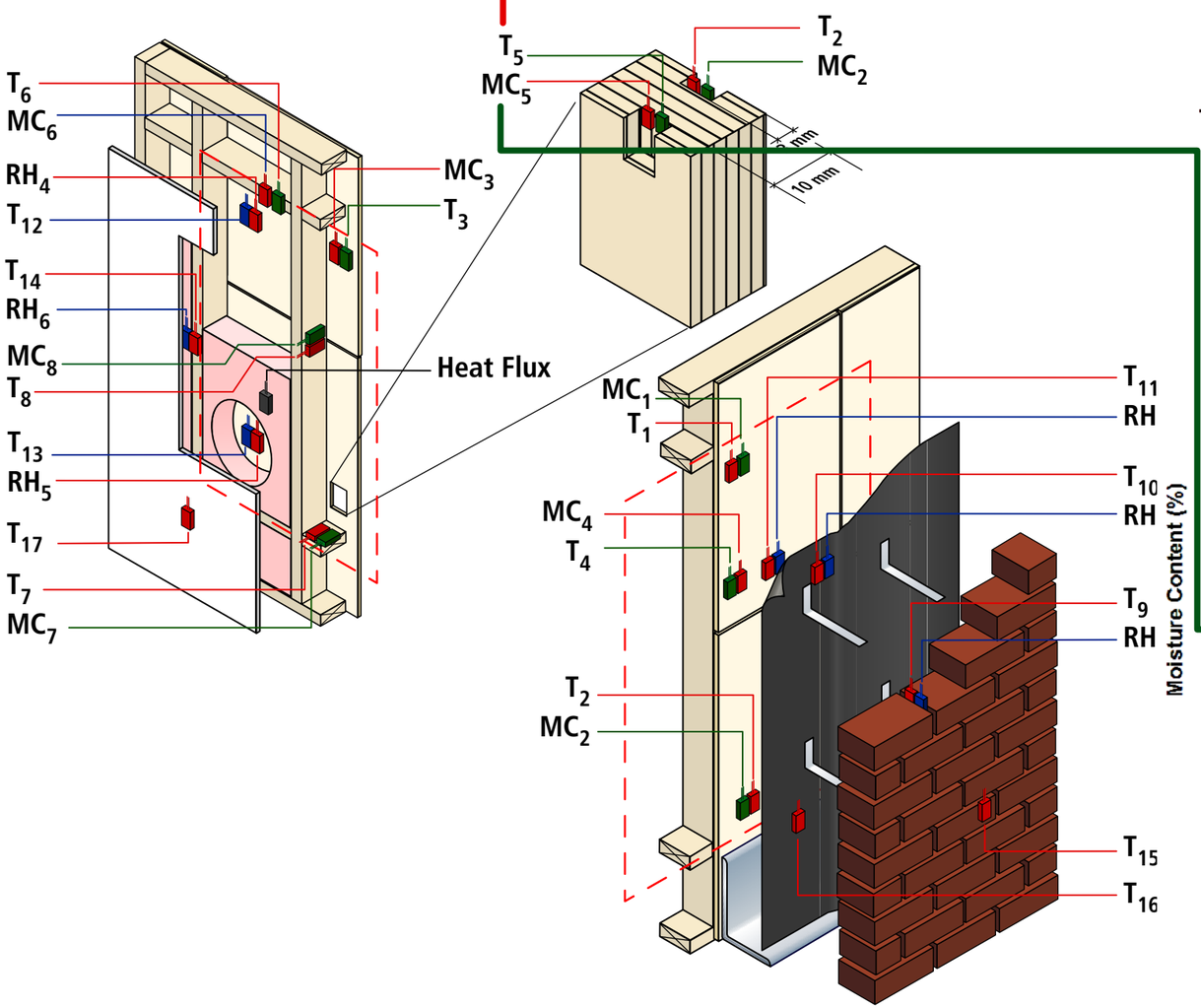
T_6
MC_6
RH_4
T_{12}
T_{14}
RH_6
MC_8
T_8
T_{13}
RH_5
T_{17}
T_7
MC_7
MC_3
T_3
Heat Flux
T_5
MC_5
T_2
MC_2
5 mm
10 mm
MC_1
T_1
MC_4
T_4
T_2
MC_2
T_{11}
RH
T_{10}
RH
T_9
RH
T_{15}
T_{16}

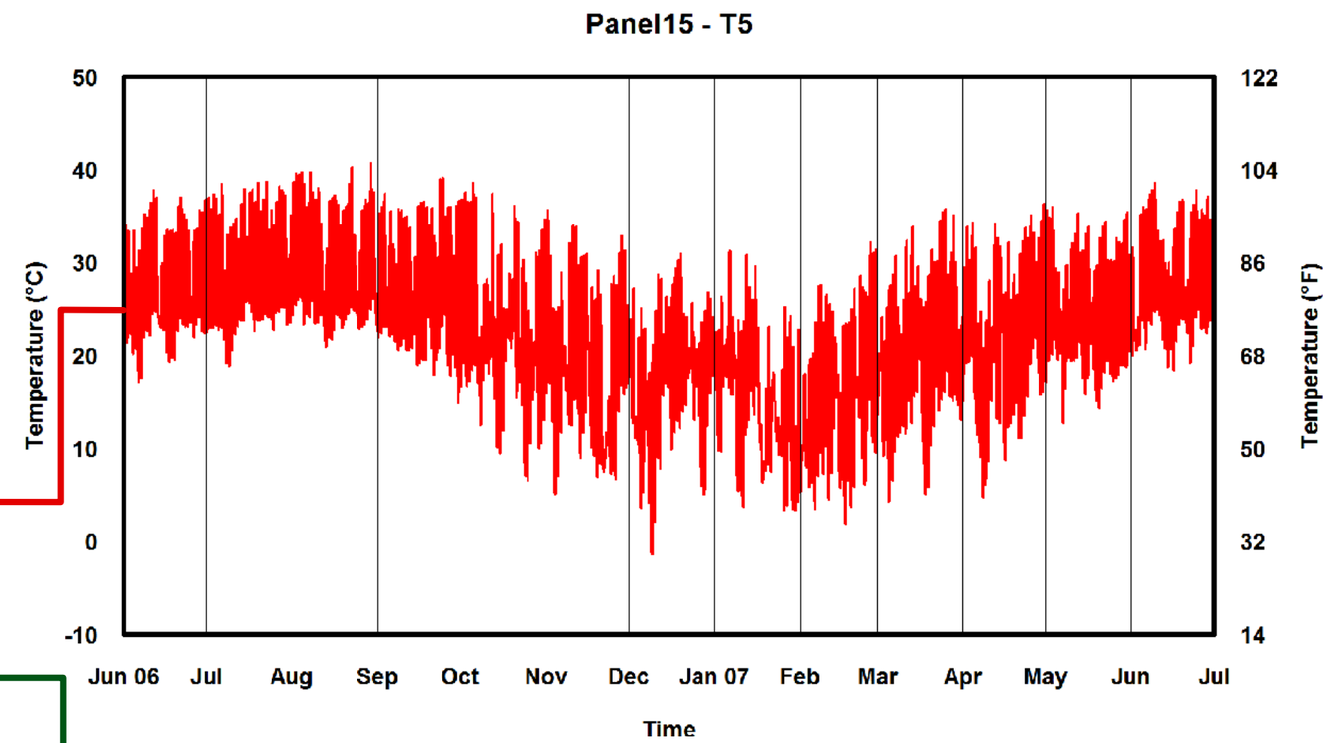
Panel15 - T5
Temperature (°C)
Temperature (°F)
50
40
30
20
10
0
-10
122
104
86
68
50
32
14
Jun 06
Jul
Aug
Sep
Oct
Nov
Dec
Jan 07
Feb
Mar
Apr
May
Jun
Jul
Time

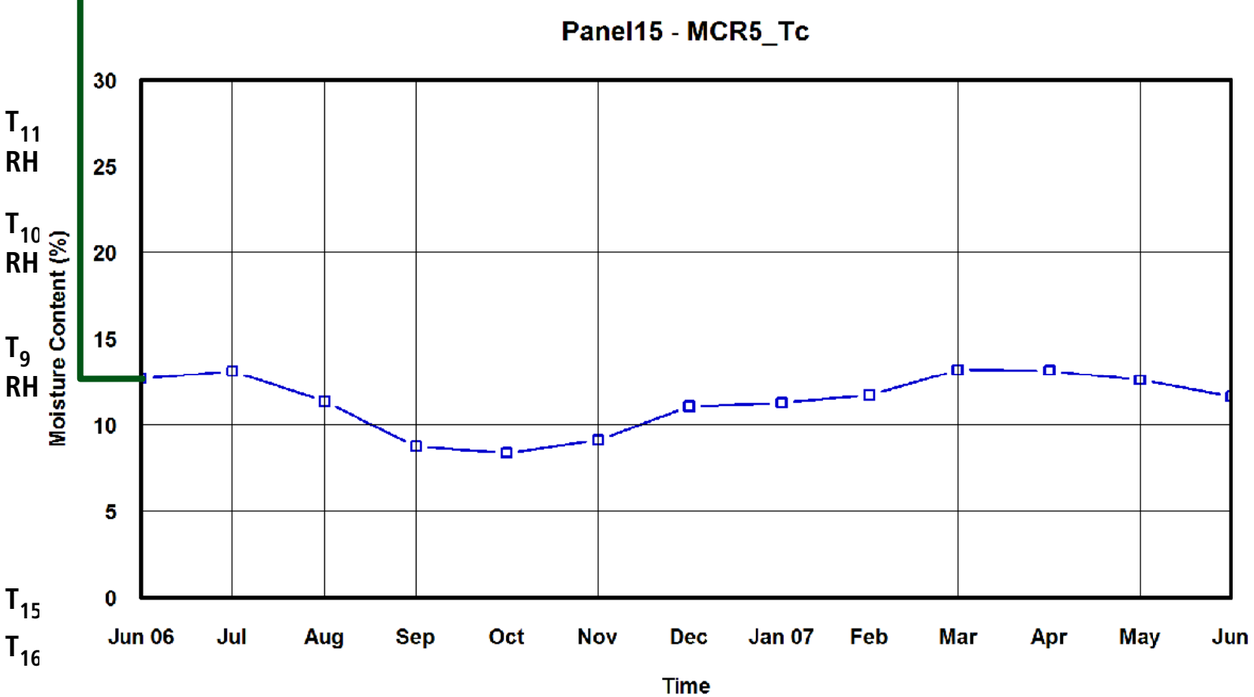
Panel15 - MCR5_Tc
Moisture Content (%)
30
25
20
15
10
5
0
Jun 06
Jul
Aug
Sep
Oct
Nov
Dec
Jan 07
Feb
Mar
Apr
May
Jun
Time

Panel 15

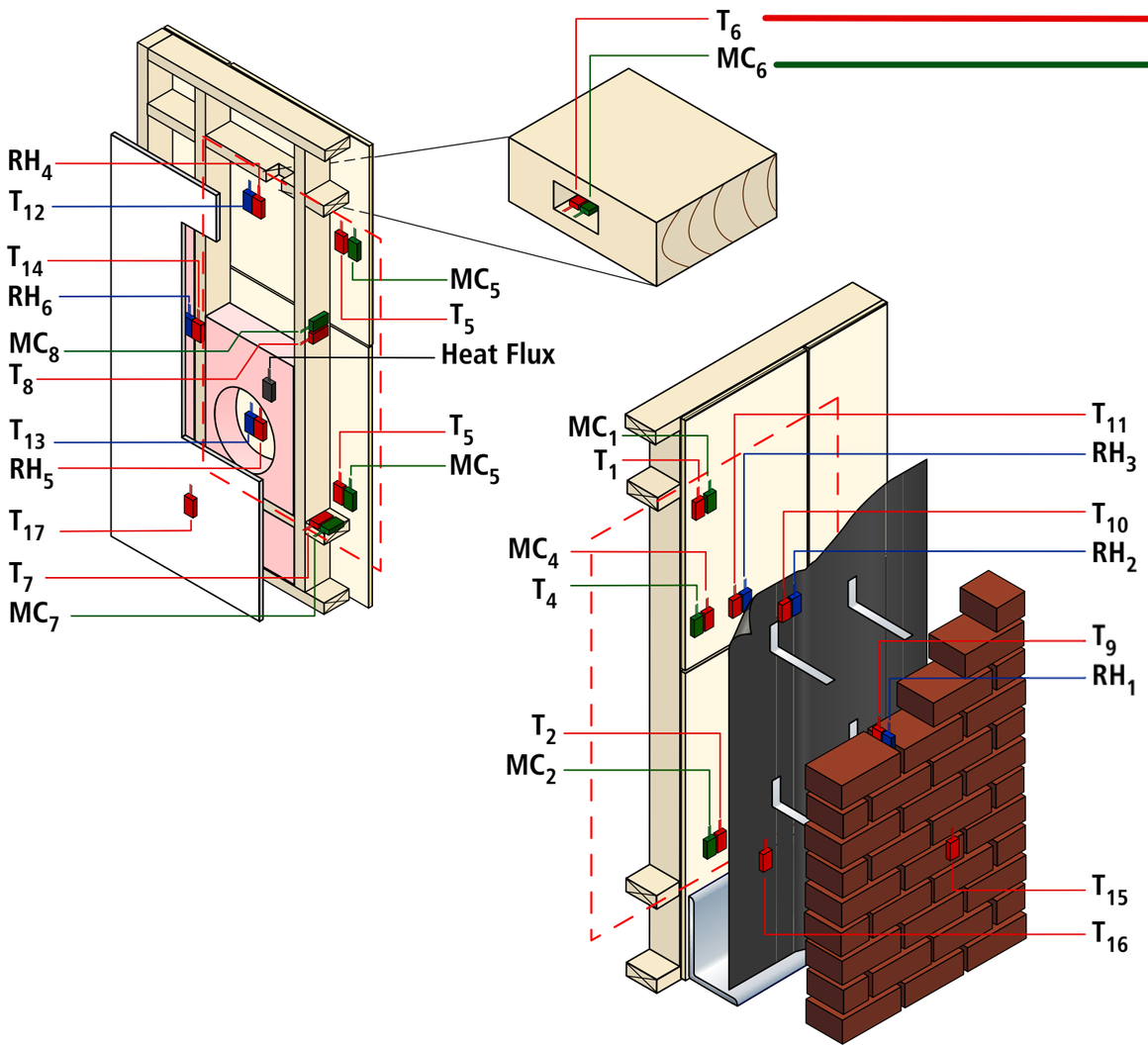
T_6
MC_6
RH_4
T_{12}
T_{14}
RH_6
MC_8
T_8
T_{13}
RH_5
T_{17}
T_7
MC_7
MC_5
T_5
Heat Flux
T_5
MC_5
MC_1
T_1
MC_4
T_4
T_2
MC_2
T_{11}
RH_3
T_{10}
RH_2
T_9
RH_1
T_{15}
T_{16}

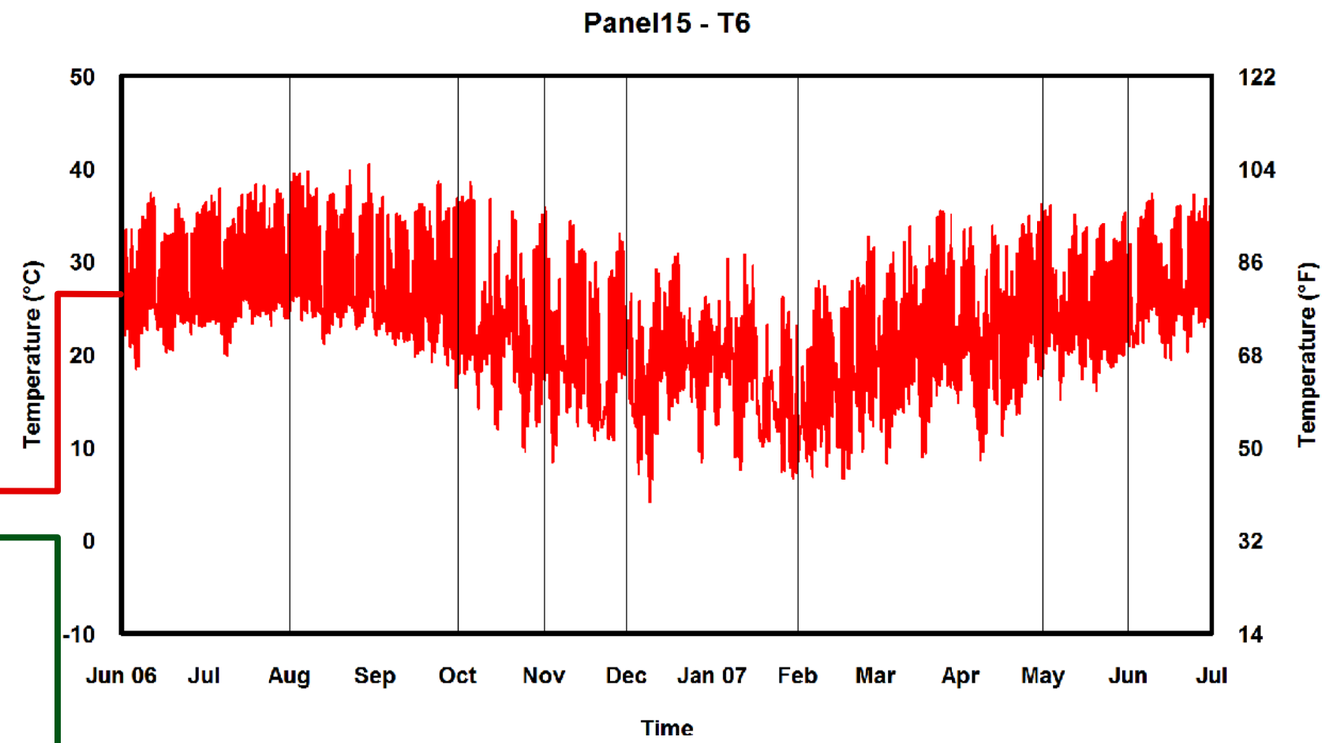
Panel15 - T6
Temperature (°C)
50
40
30
20
10
0
-10
Temperature (°F)
122
104
86
68
50
32
14
Jun 06
Jul
Aug
Sep
Oct
Nov
Dec
Jan 07
Feb
Mar
Apr
May
Jun
Jul
Time

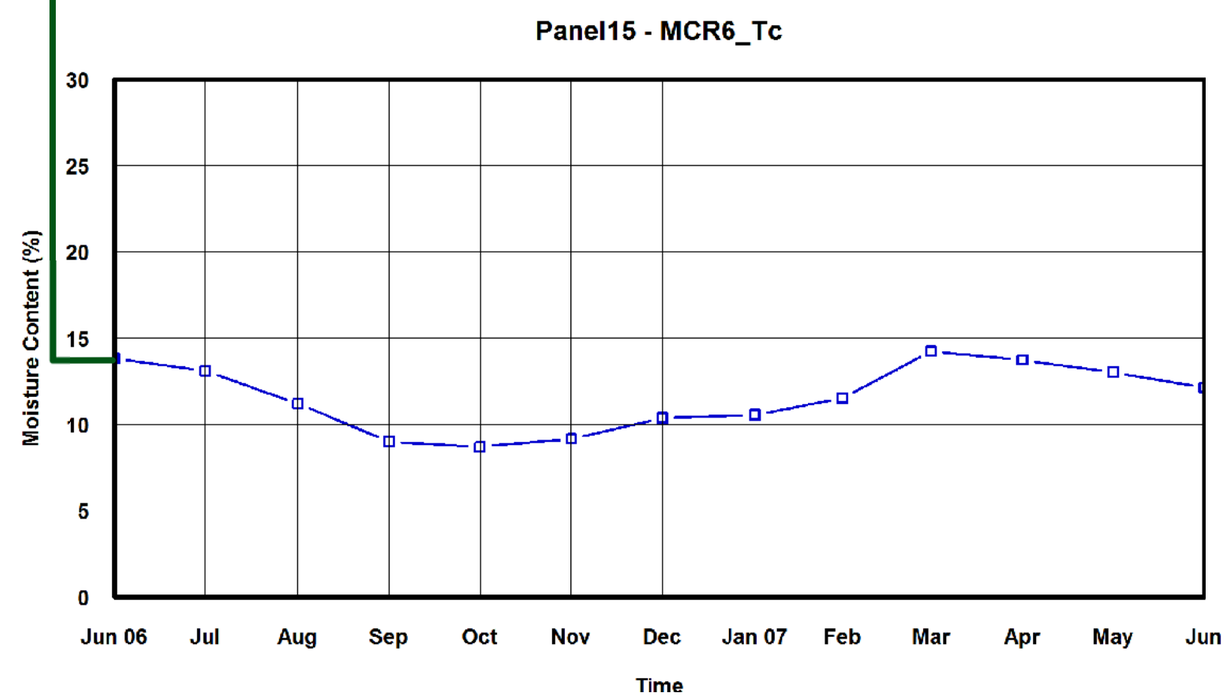
Panel15 - MCR6_Tc
Moisture Content (%)
30
25
20
15
10
5
0
Jun 06
Jul
Aug
Sep
Oct
Nov
Dec
Jan 07
Feb
Mar
Apr
May
Jun
Time

Panel 15

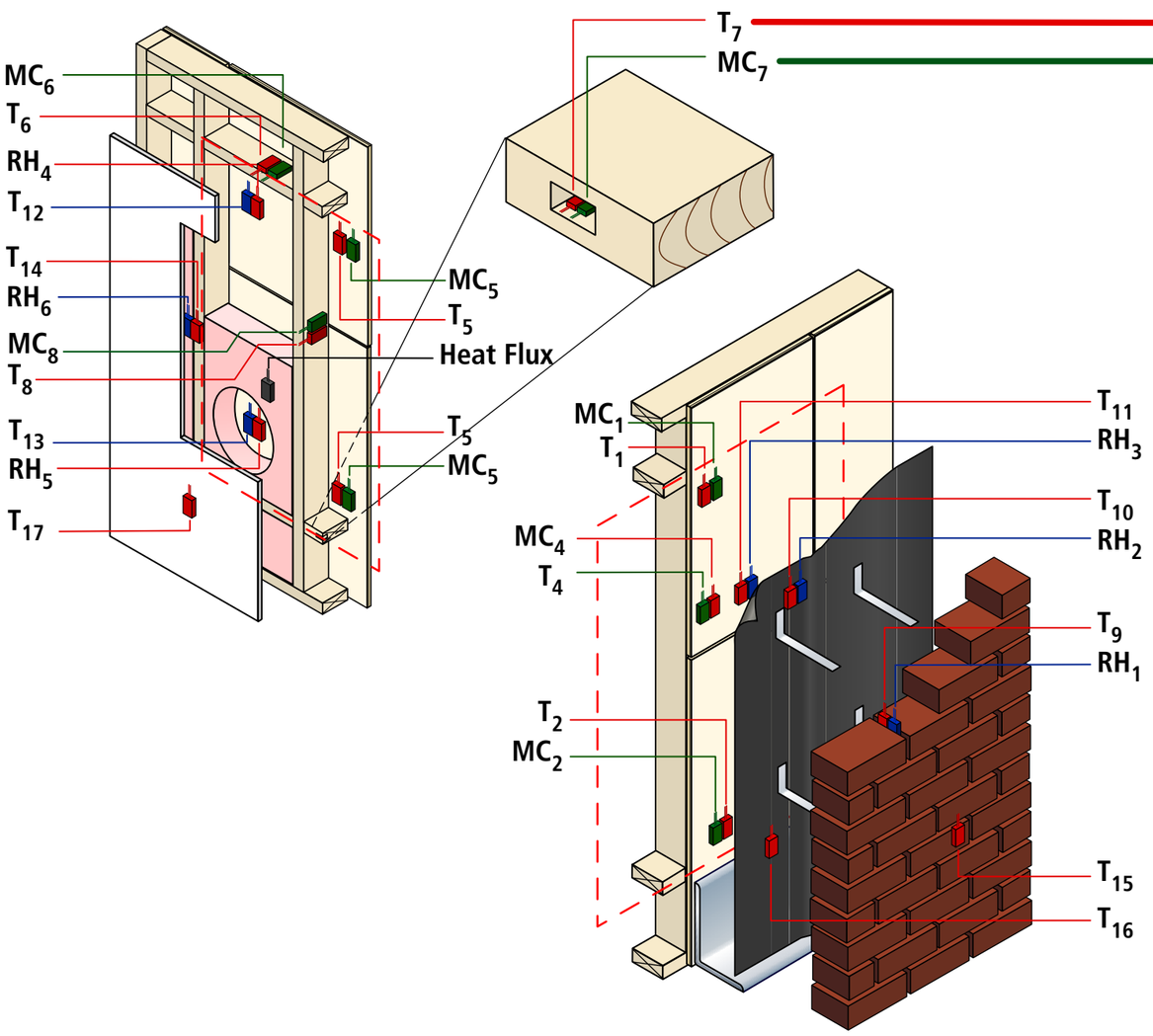
MC6
T6
RH4
T12
T14
RH6
MC8
T8
T13
RH5
T17
T7
MC7
MC5
T5
Heat Flux
T5
MC5
MC1
T1
MC4
T4
T2
MC2
T11
RH3
T10
RH2
T9
RH1
T15
T16

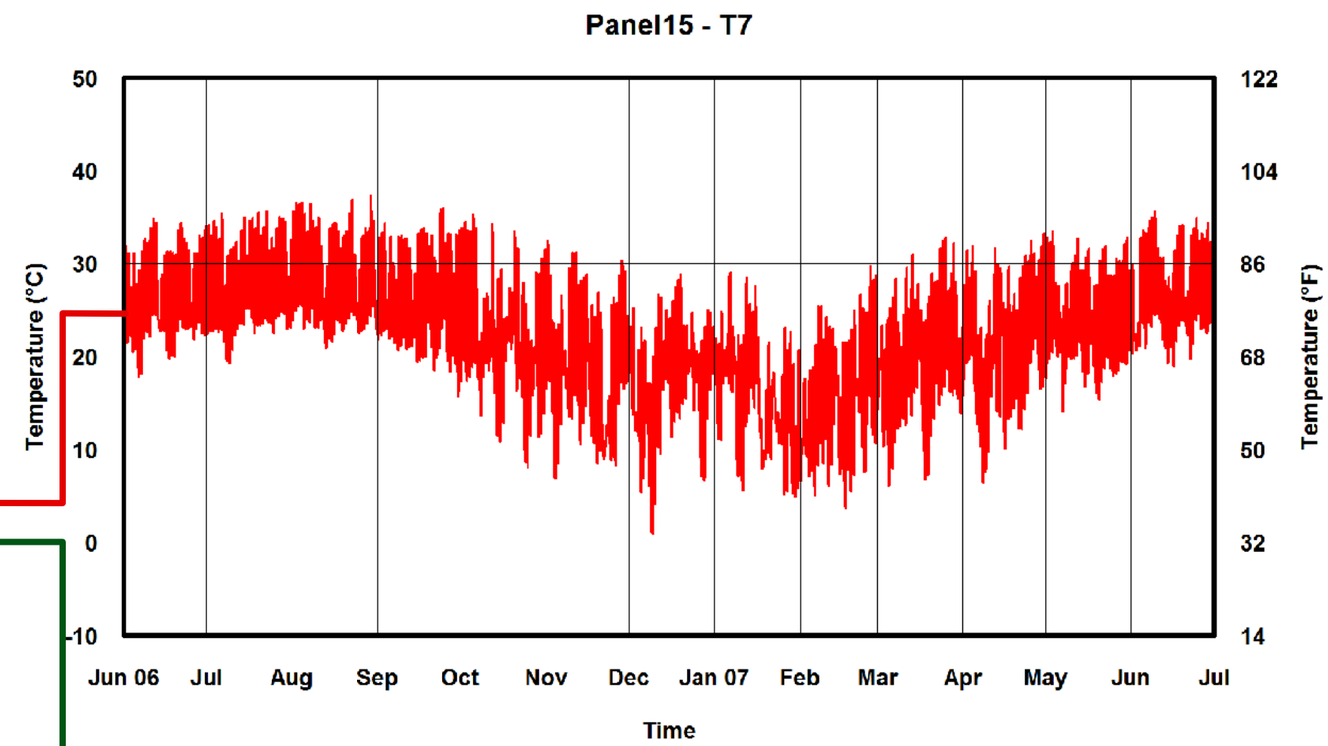
Panel15 - T7
Temperature (°C)
Temperature (°F)
50
40
30
20
10
0
-10
122
104
86
68
50
32
14
Jun 06
Jul
Aug
Sep
Oct
Nov
Dec
Jan 07
Feb
Mar
Apr
May
Jun
Jul
Time

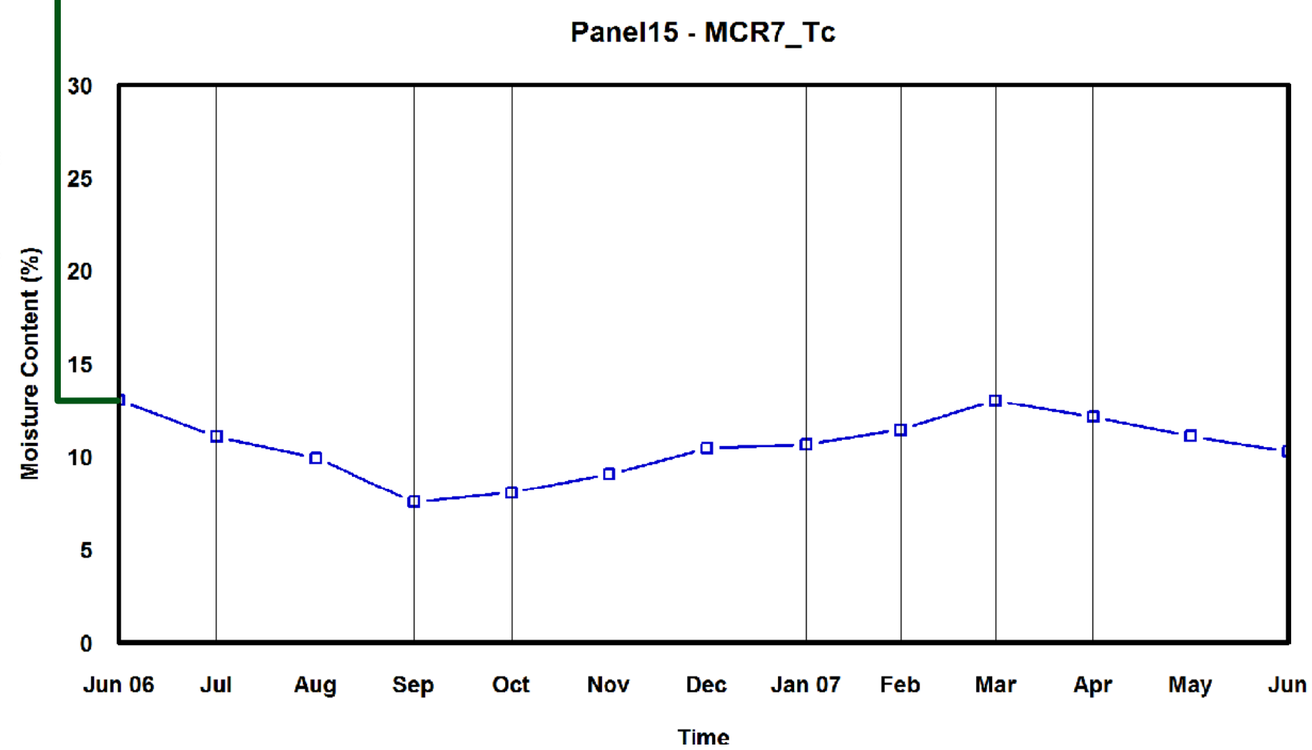
Panel15 - MCR7_Tc
Moisture Content (%)
30
25
20
15
10
5
0
Jun 06
Jul
Aug
Sep
Oct
Nov
Dec
Jan 07
Feb
Mar
Apr
May
Jun
Time

Panel 15

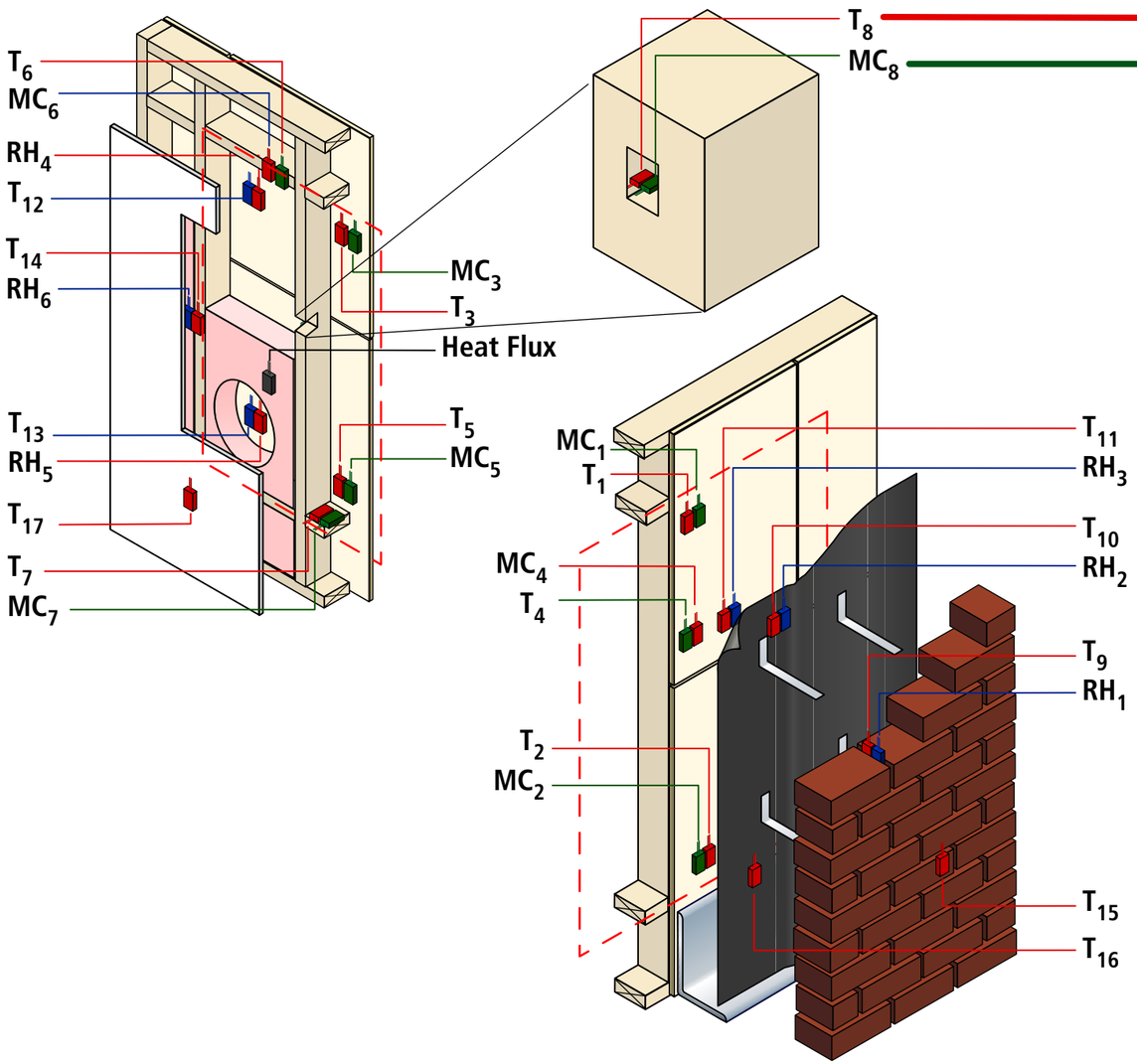
T_6
MC_6
RH_4
T_{12}
T_{14}
RH_6
T_{13}
RH_5
T_{17}
T_7
MC_7
MC_3
T_3
Heat Flux
T_5
MC_5
T_8
MC_8
MC_1
T_1
MC_4
T_4
T_2
MC_2
T_{11}
RH_3
T_{10}
RH_2
T_9
RH_1
T_{15}
T_{16}

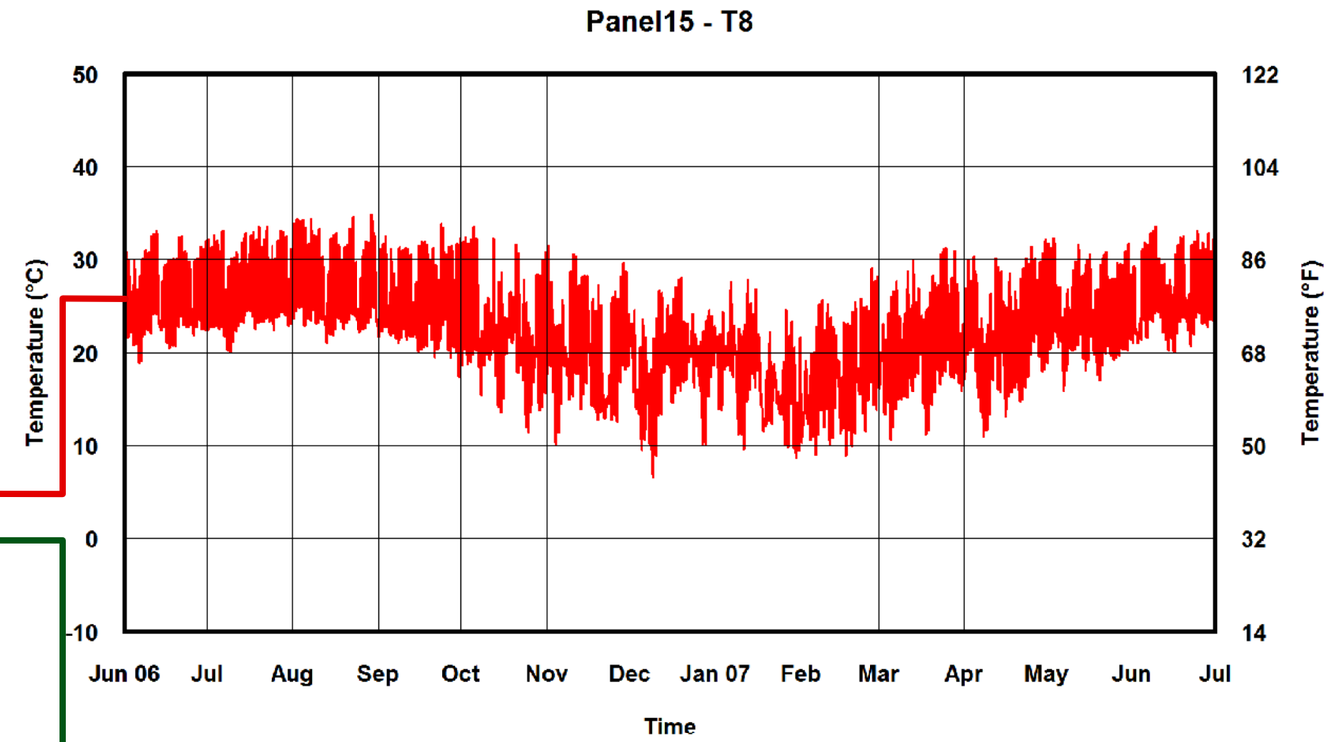
Panel15 - T8
Temperature (°C)
Temperature (°F)
50
40
30
20
10
0
-10
122
104
86
68
50
32
14
Jun 06
Jul
Aug
Sep
Oct
Nov
Dec
Jan 07
Feb
Mar
Apr
May
Jun
Jul
Time

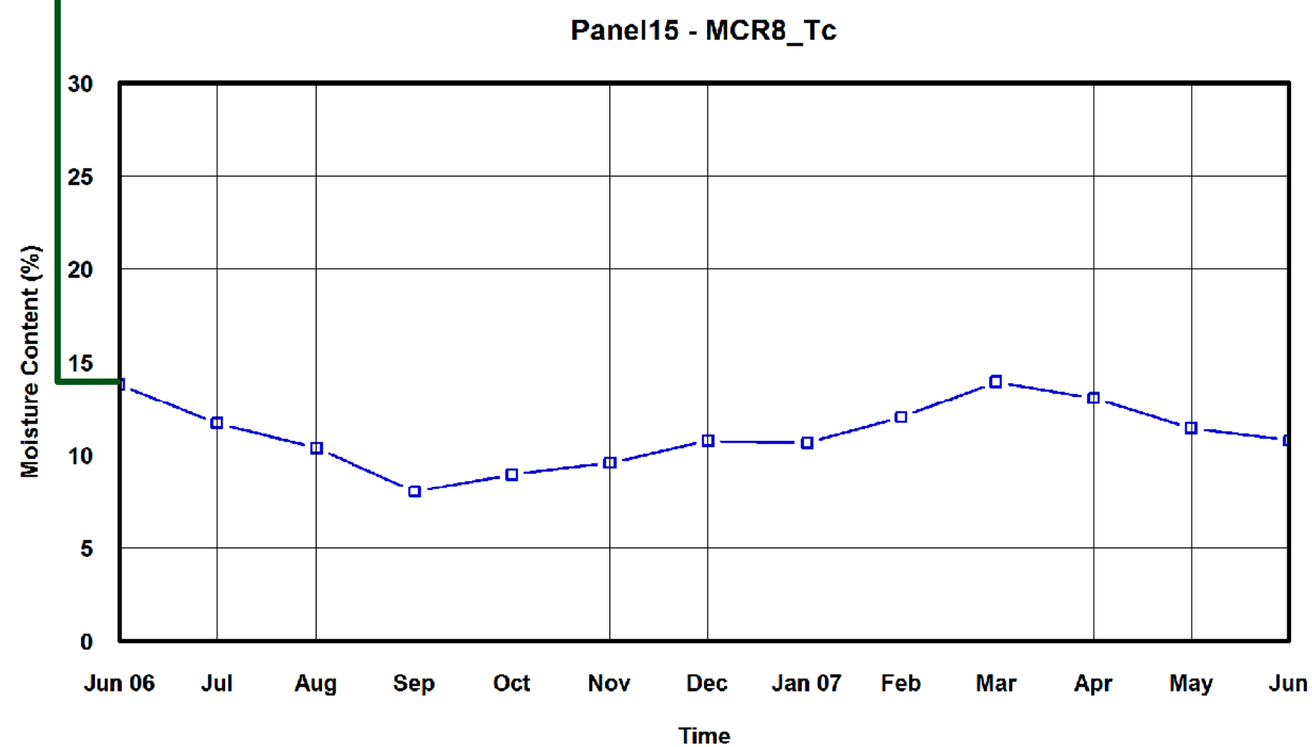
Panel15 - MCR8_Tc
Moisture Content (%)
30
25
20
15
10
5
0
Jun 06
Jul
Aug
Sep
Oct
Nov
Dec
Jan 07
Feb
Mar
Apr
May
Jun
Time

Panel 15

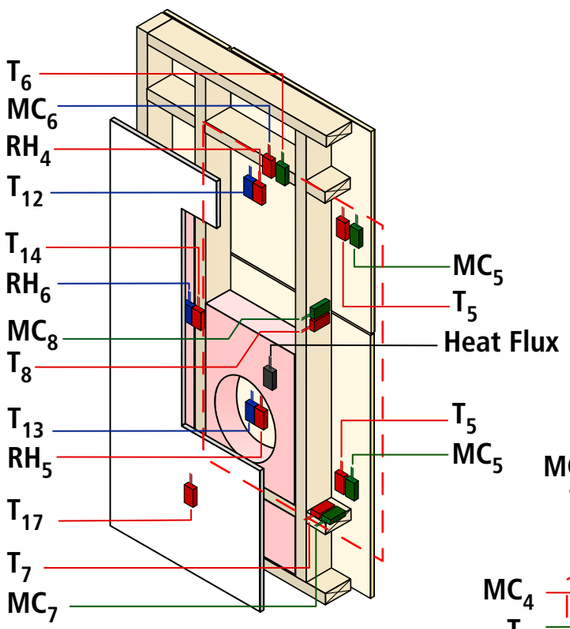
T_6
MC_6
RH_4
T_{12}
T_{14}
RH_6
MC_8
T_8
T_{13}
RH_5
T_{17}
T_7
MC_7
MC_5
T_5
Heat Flux
T_5
MC_5

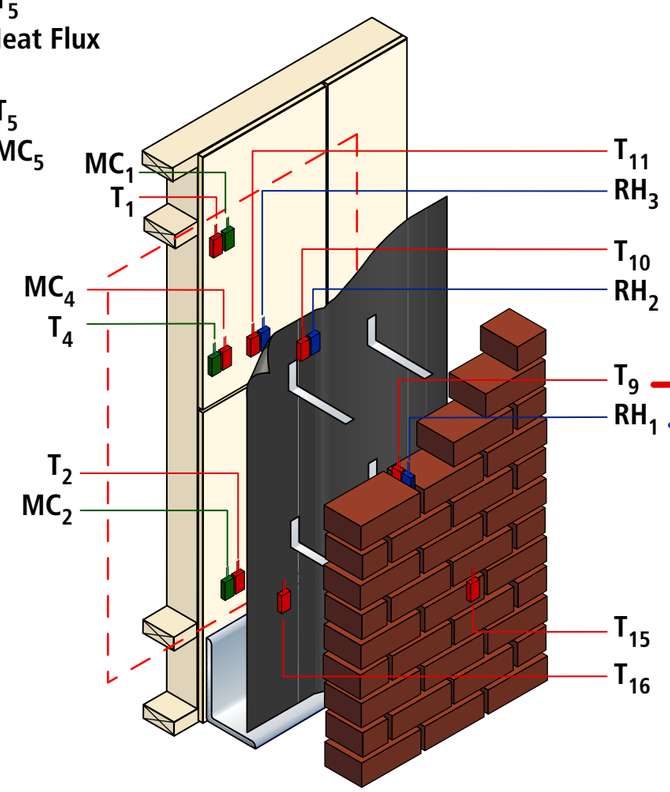
MC_1
T_1
MC_4
T_4
T_2
MC_2
T_{11}
RH_3
T_{10}
RH_2
T_9
RH_1
T_{15}
T_{16}

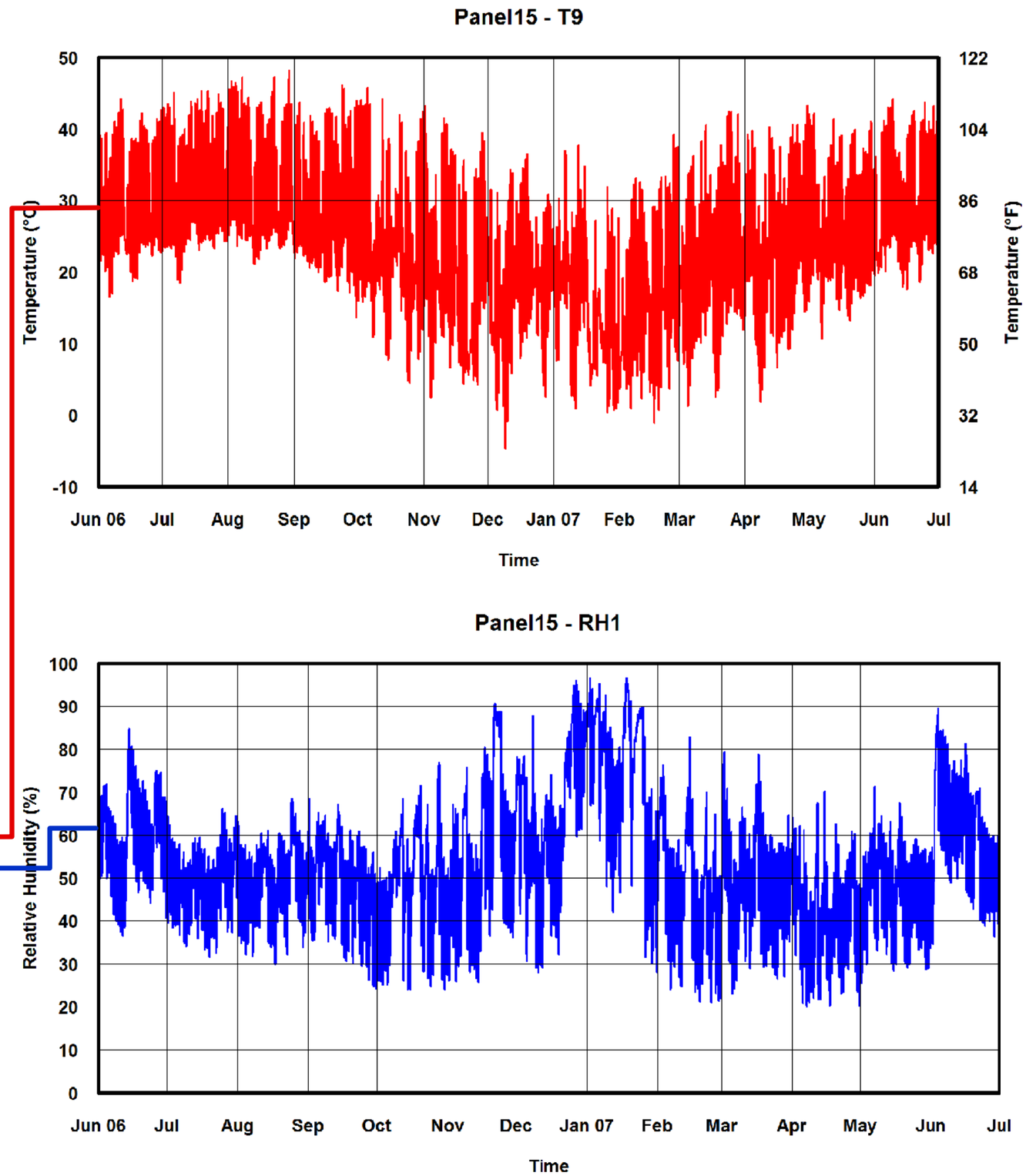
Panel15 - T9
Temperature (°C)
Temperature (°F)
50
40
30
20
10
0
-10
122
104
86
68
50
32
14
Jun 06
Jul
Aug
Sep
Oct
Nov
Dec
Jan 07
Feb
Mar
Apr
May
Jun
Jul
Time
Panel15 - RH1
Relative Humidity (%)
100
90
80
70
60
50
40
30
20
10
0
Jun 06
Jul
Aug
Sep
Oct
Nov
Dec
Jan 07
Feb
Mar
Apr
May
Jun
Jul
Time

Panel 15

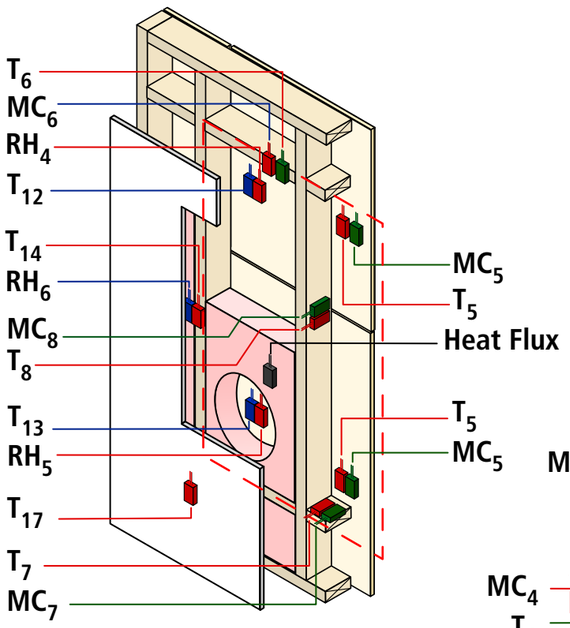
T_6
MC_6
RH_4
T_{12}
T_{14}
RH_6
MC_8
T_8
T_{13}
RH_5
T_{17}
T_7
MC_7
MC_5
T_5
Heat Flux
T_5
MC_5

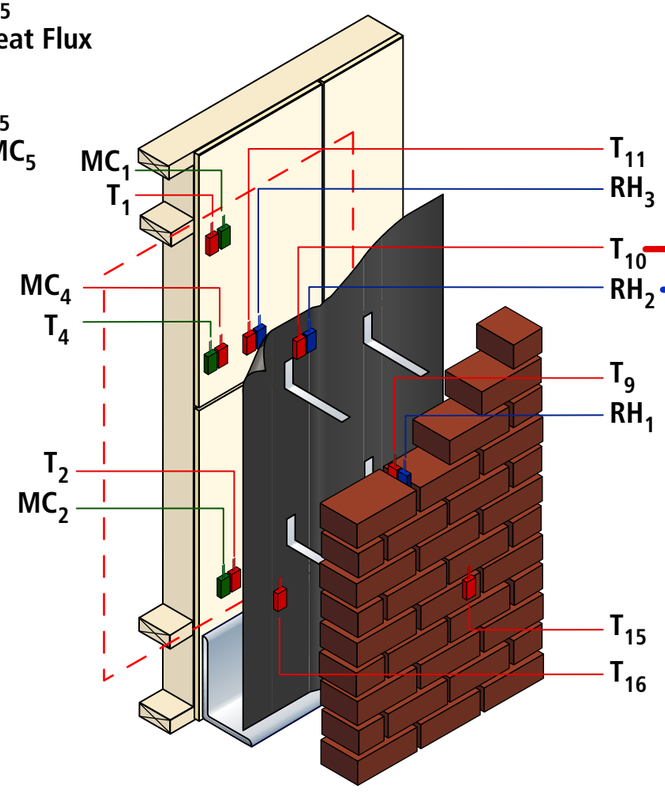
MC_1
T_1
MC_4
T_4
T_2
MC_2
T_{11}
RH_3
T_{10}
RH_2
T_9
RH_1
T_{15}
T_{16}

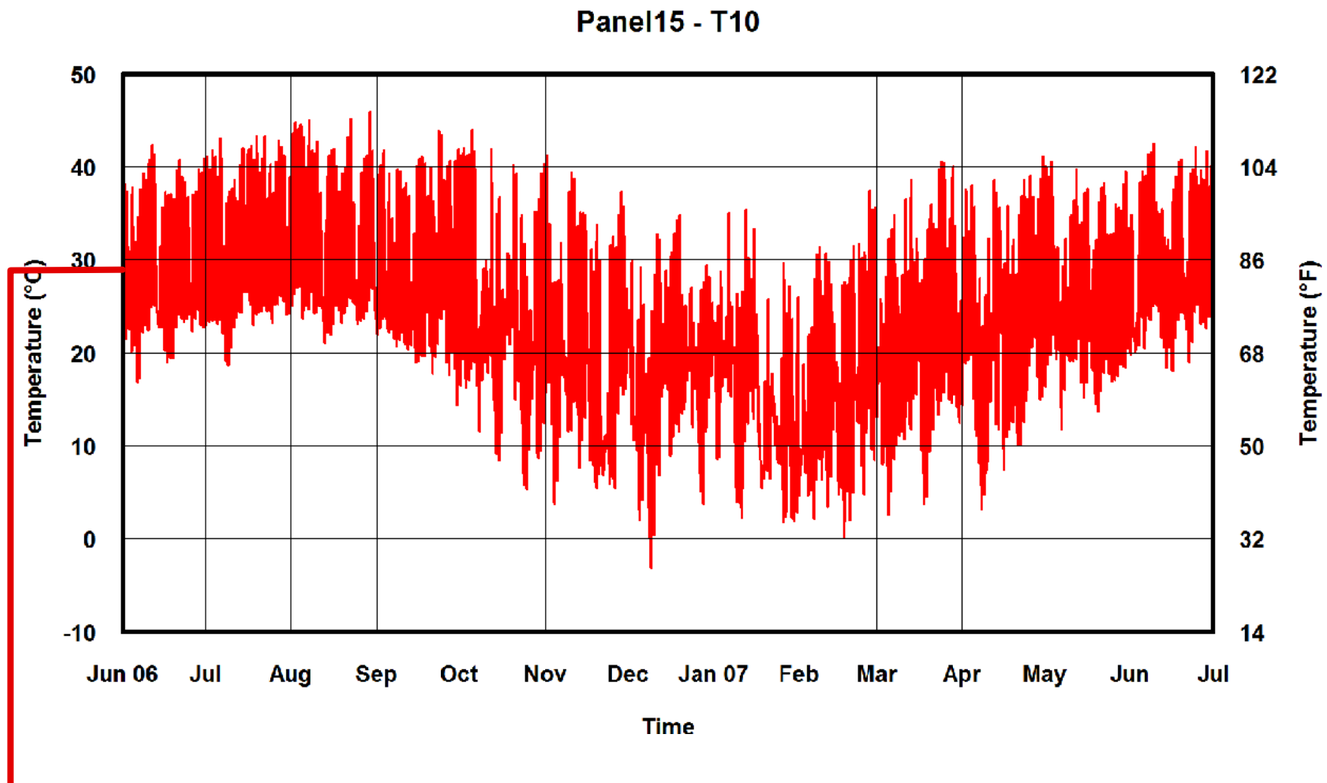
Panel15 - T10
Temperature (°C)
Temperature (°F)
50
40
30
20
10
0
-10
122
104
86
68
50
32
14
Jun 06
Jul
Aug
Sep
Oct
Nov
Dec
Jan 07
Feb
Mar
Apr
May
Jun
Jul
Time

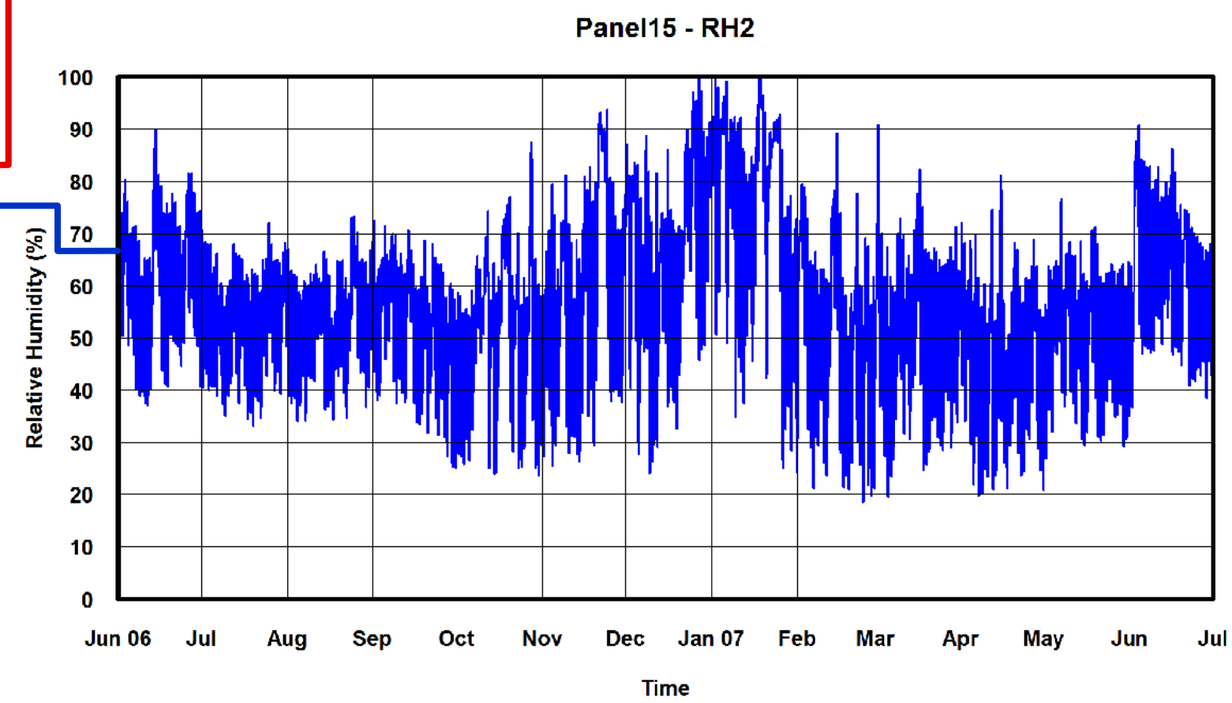
Panel15 - RH2
Relative Humidity (%)
100
90
80
70
60
50
40
30
20
10
0
Jun 06
Jul
Aug
Sep
Oct
Nov
Dec
Jan 07
Feb
Mar
Apr
May
Jun
Jul
Time

Panel 15

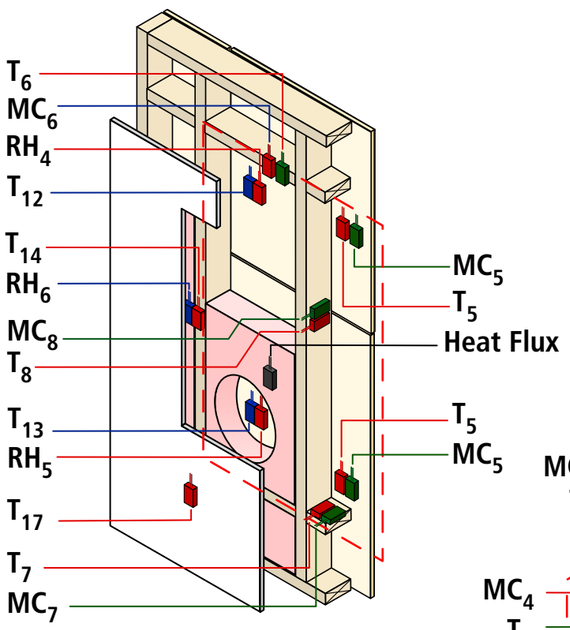
T_6
MC_6
RH_4
T_{12}
T_{14}
RH_6
MC_8
T_8
T_{13}
RH_5
T_{17}
T_7
MC_7
MC_5
T_5
Heat Flux
T_5
MC_5

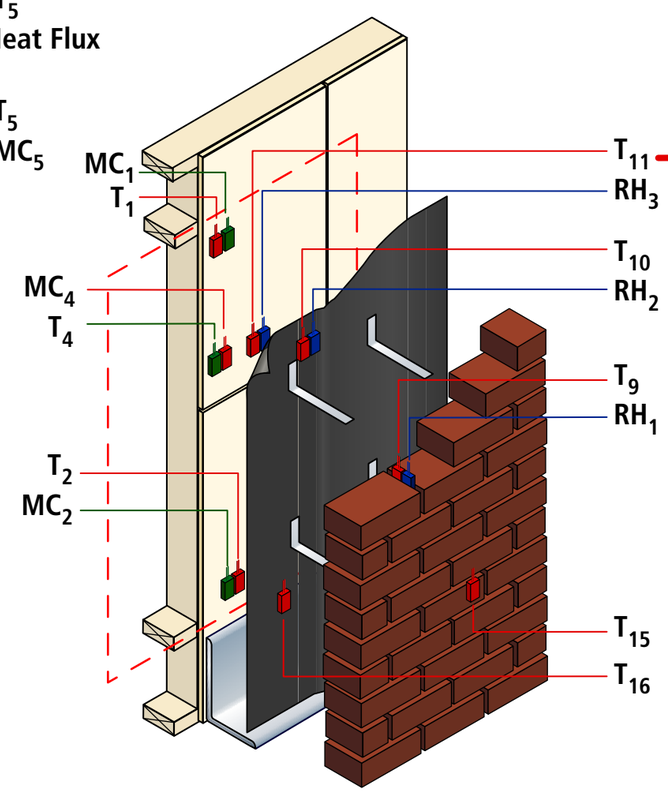
MC_1
T_1
MC_4
T_4
T_2
MC_2
T_{11}
RH_3
T_{10}
RH_2
T_9
RH_1
T_{15}
T_{16}

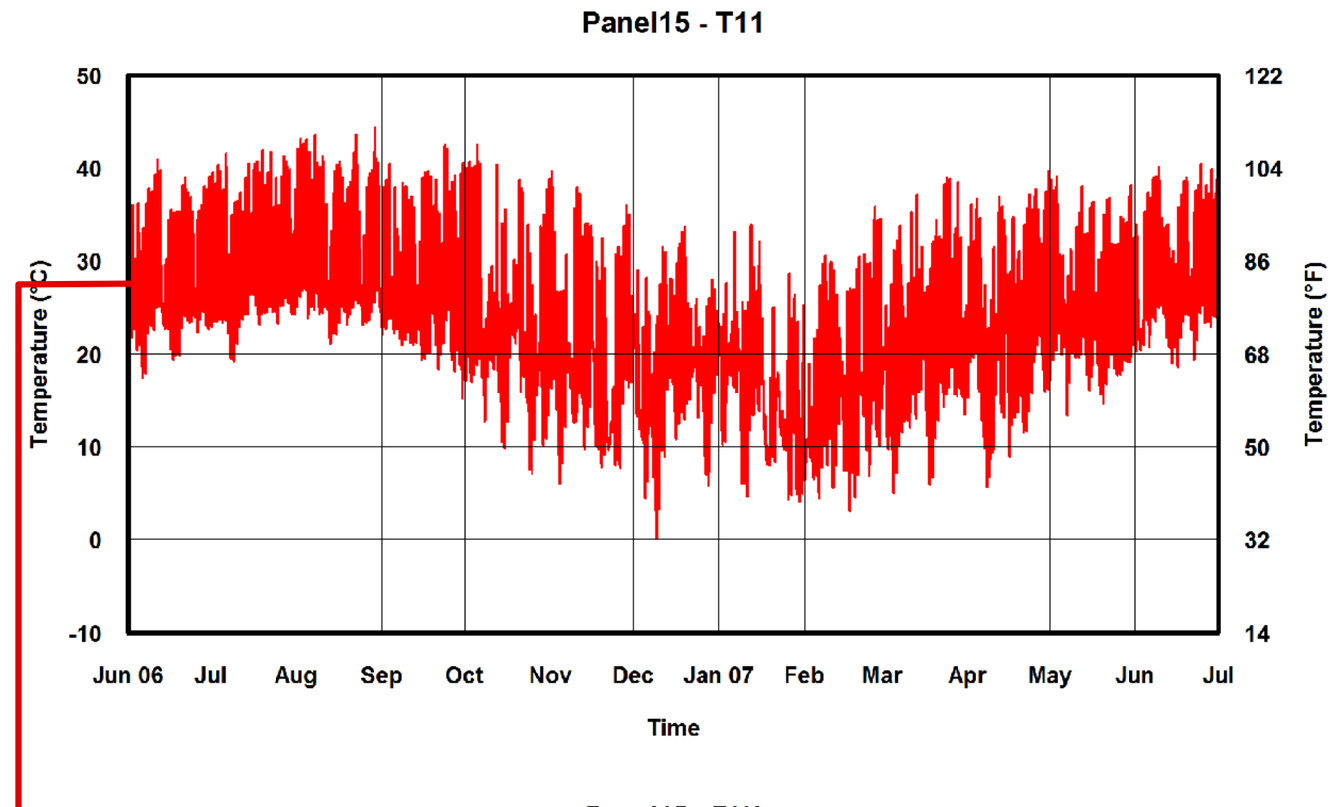
Panel15 - T11
Temperature (°C)
50
40
30
20
10
0
-10
Temperature (°F)
122
104
86
68
50
32
14
Jun 06
Jul
Aug
Sep
Oct
Nov
Dec
Jan 07
Feb
Mar
Apr
May
Jun
Jul
Time

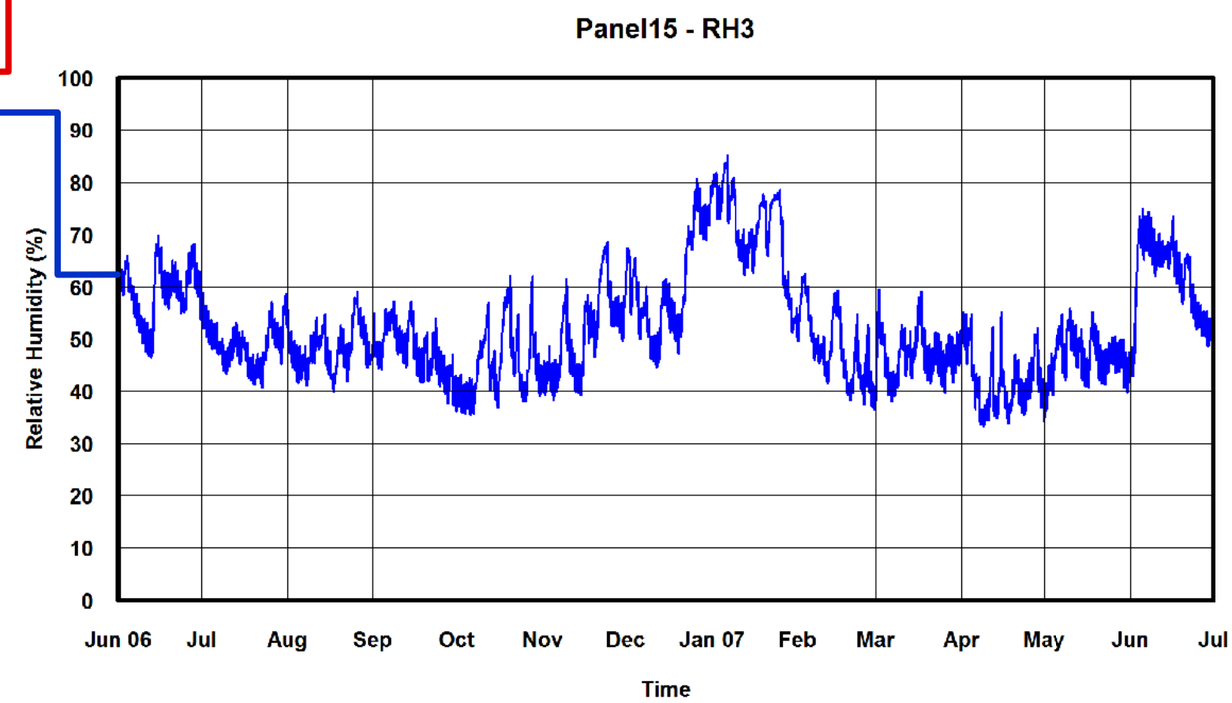
Panel15 - RH3
Relative Humidity (%)
100
90
80
70
60
50
40
30
20
10
0
Jun 06
Jul
Aug
Sep
Oct
Nov
Dec
Jan 07
Feb
Mar
Apr
May
Jun
Jul
Time

Panel 15

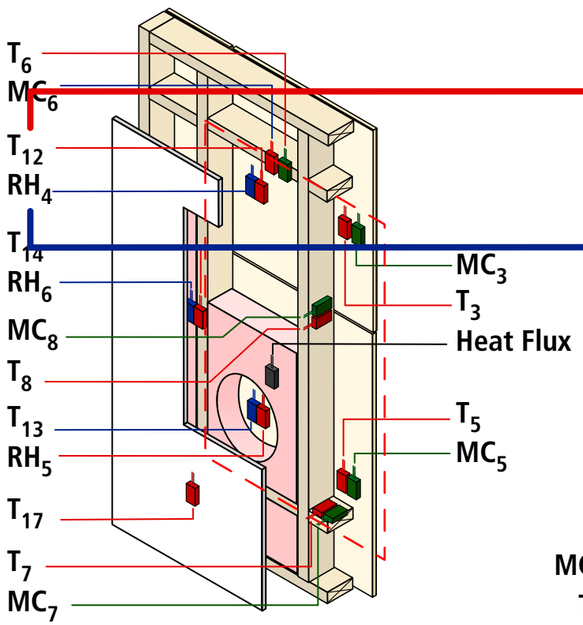
T_6
MC_6
T_{12}
RH_4
T_{14}
RH_6
MC_8
T_8
T_{13}
RH_5
T_{17}
T_7
MC_7
MC_3
T_3
Heat Flux
T_5
MC_5

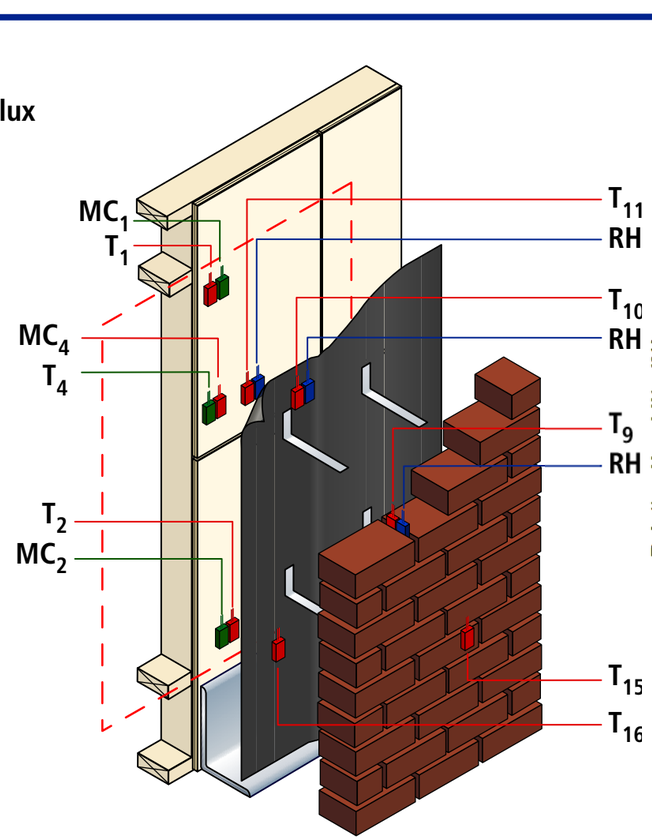
MC_1
T_1
MC_4
T_4
T_2
MC_2
T_{11}
RH
T_{10}
RH
T_9
RH
T_{15}
T_{16}

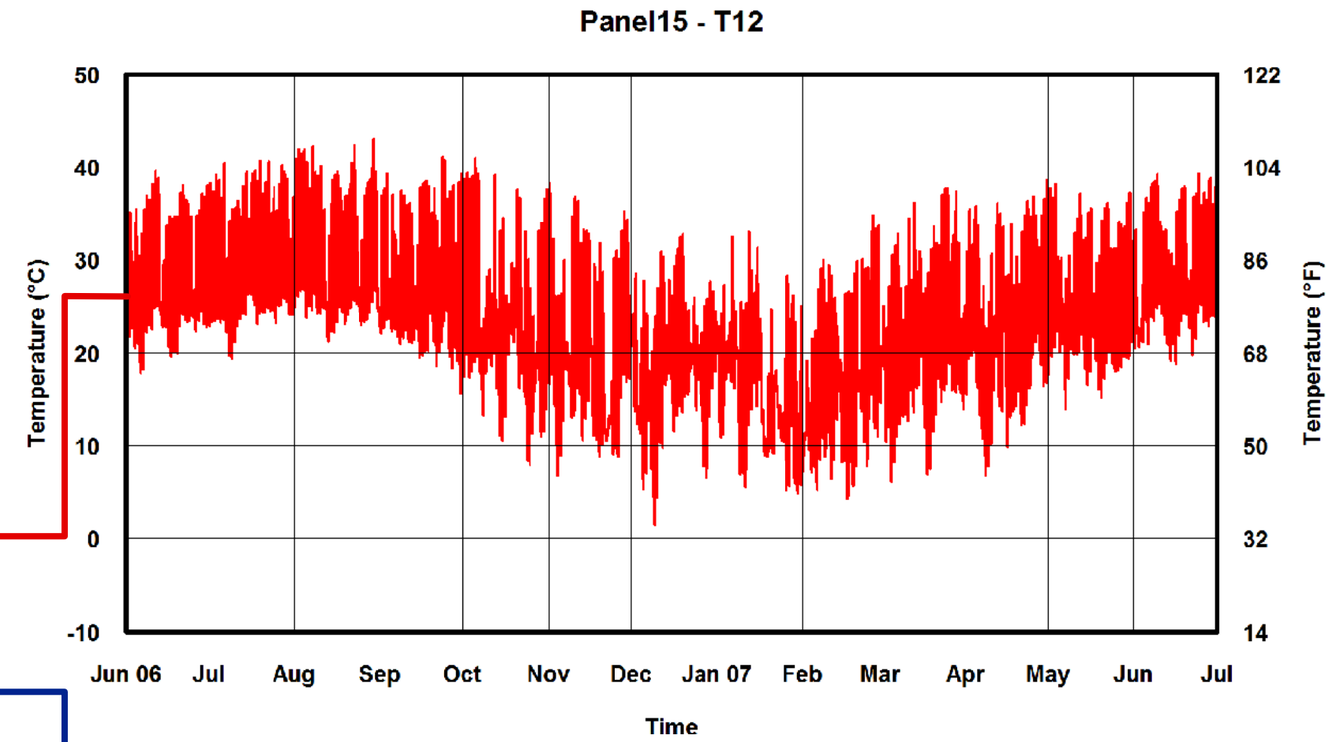
Panel15 - T12
Temperature (°C)
Temperature (°F)
50
40
30
20
10
0
-10
122
104
86
68
50
32
14
Jun 06
Jul
Aug
Sep
Oct
Nov
Dec
Jan 07
Feb
Mar
Apr
May
Jun
Jul
Time

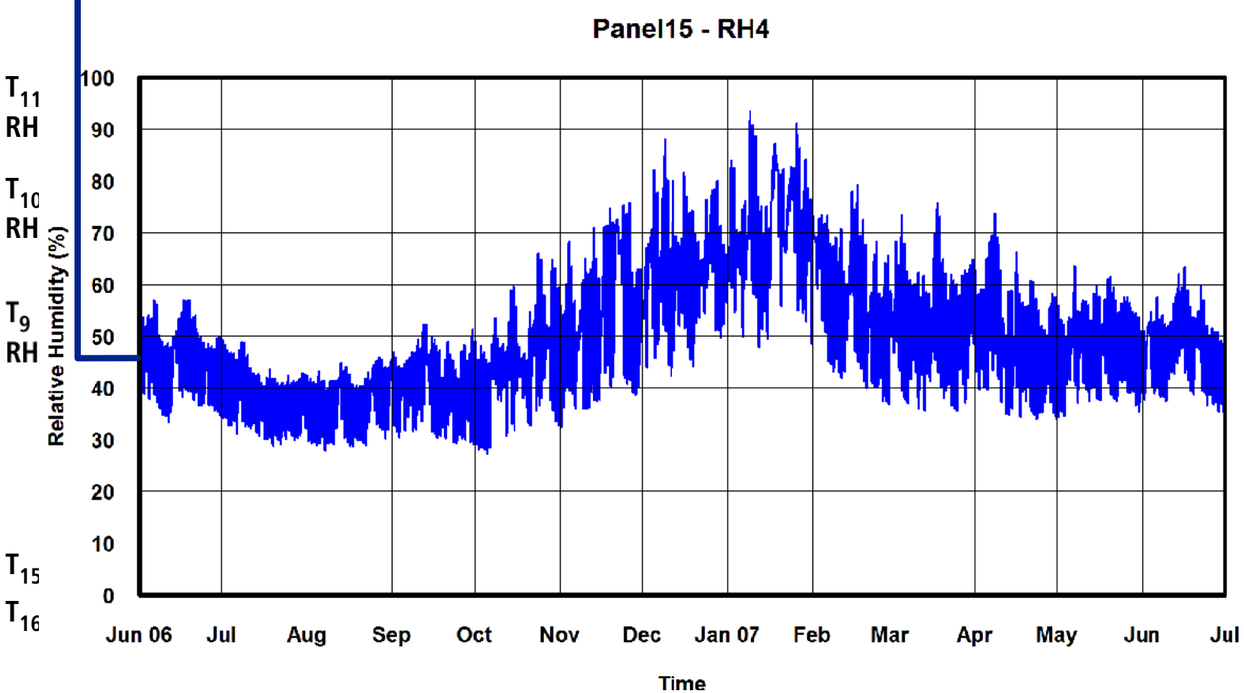
Panel15 - RH4
Relative Humidity (%)
100
90
80
70
60
50
40
30
20
10
0
Jun 06
Jul
Aug
Sep
Oct
Nov
Dec
Jan 07
Feb
Mar
Apr
May
Jun
Jul
Time

Panel 15

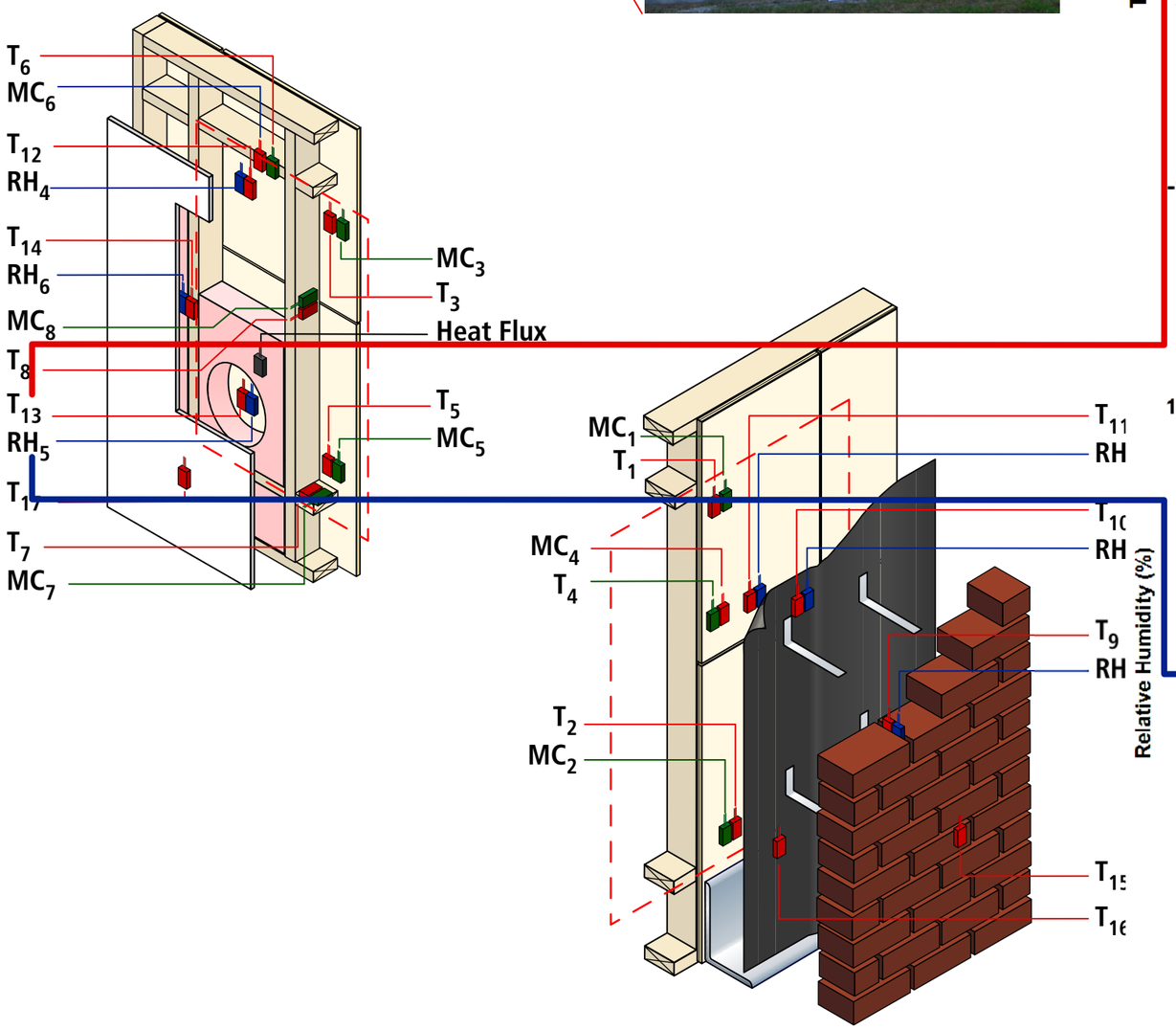
T6
MC6
T12
RH4
T14
RH6
MC8
T8
T13
RH5
T11
T7
MC7
MC3
T3
Heat Flux
T5
MC5
MC1
T1
MC4
T4
T2
MC2
T11
RH
T10
RH
T9
RH
T15
T16

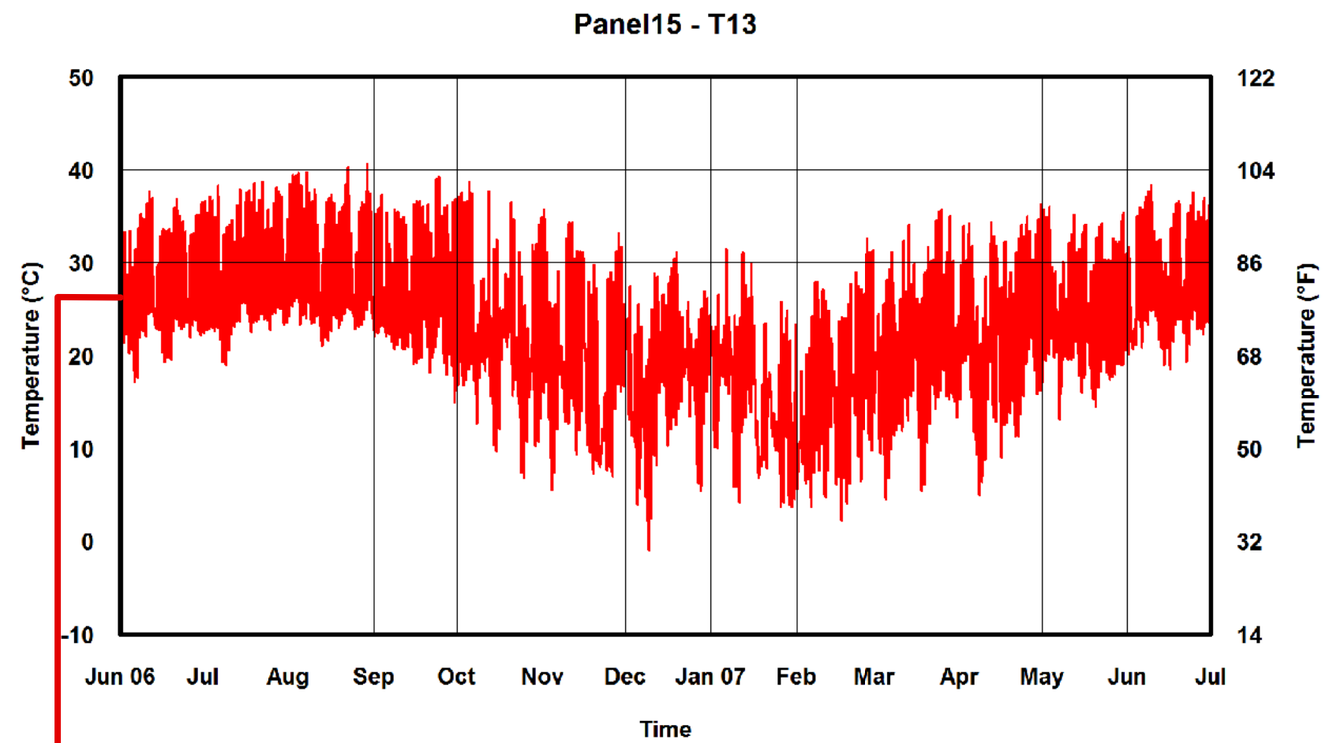
Panel15 - T13
Temperature (°C)
Temperature (°F)
50
40
30
20
10
0
-10
122
104
86
68
50
32
14
Jun 06
Jul
Aug
Sep
Oct
Nov
Dec
Jan 07
Feb
Mar
Apr
May
Jun
Jul
Time

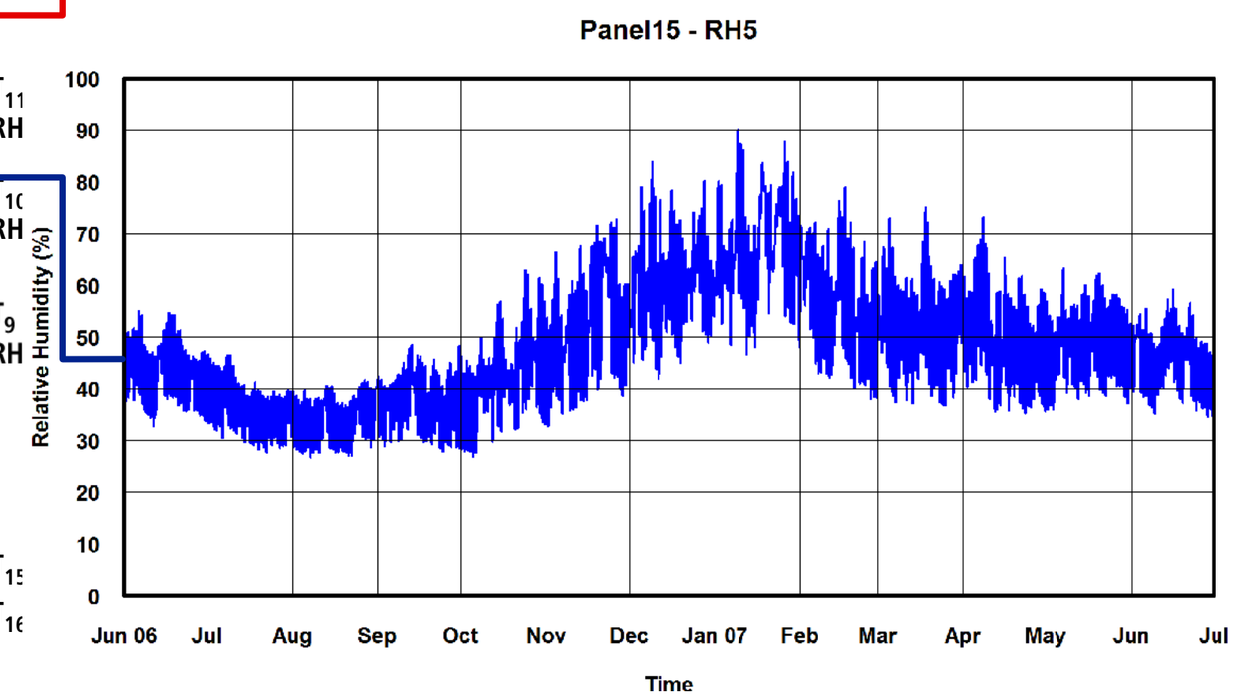
Panel15 - RH5
Relative Humidity (%)
100
90
80
70
60
50
40
30
20
10
0
Jun 06
Jul
Aug
Sep
Oct
Nov
Dec
Jan 07
Feb
Mar
Apr
May
Jun
Jul
Time

Panel 15

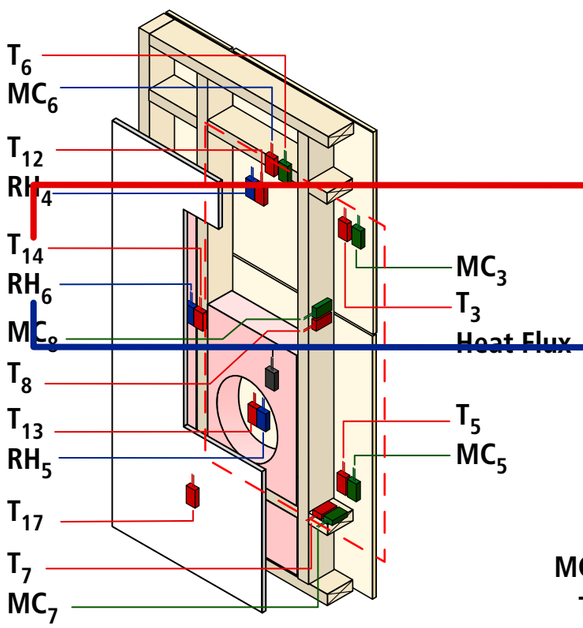
T_6
MC_6
T_{12}
RH_4
T_{14}
RH_6
MC_8
T_8
T_{13}
RH_5
T_{17}
T_7
MC_7
MC_3
T_3
Heat Flux
T_5
MC_5

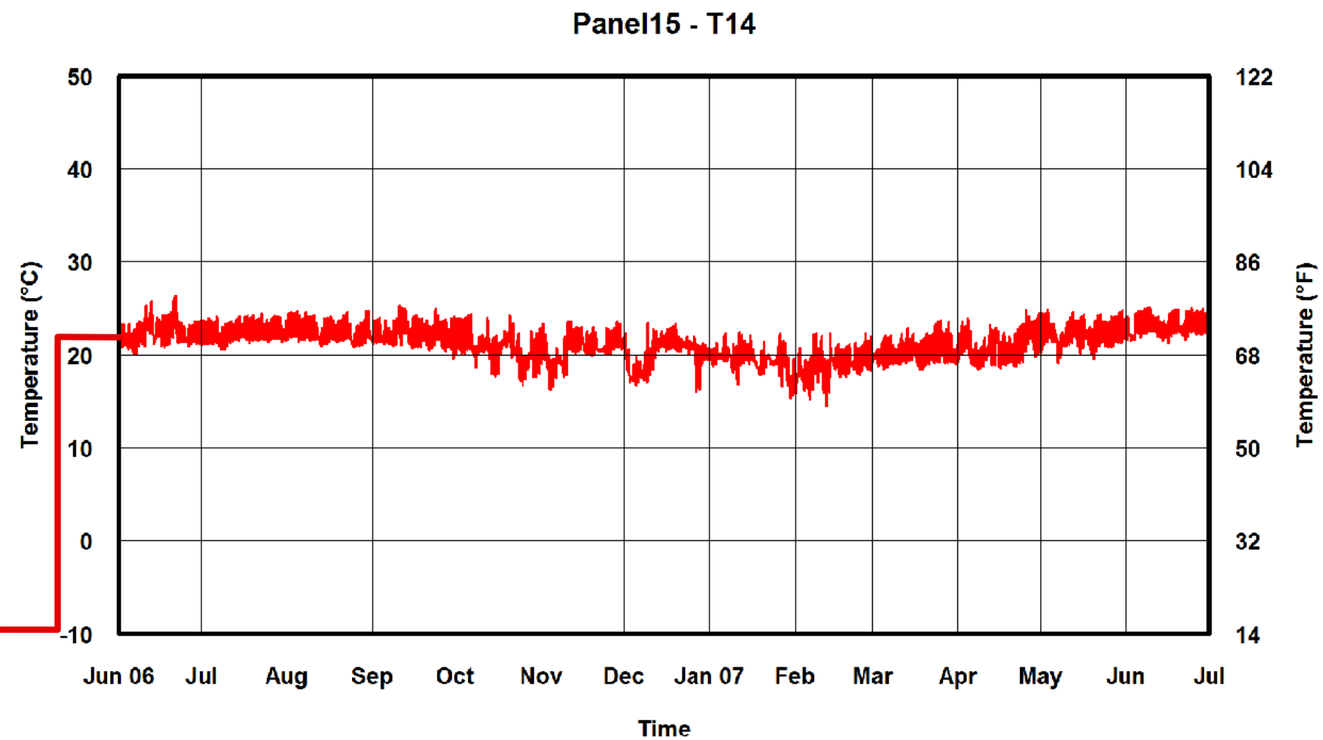
Panel15 - T14
Temperature (°C)
Temperature (°F)
50
40
30
20
10
0
-10
122
104
86
68
50
32
14
Jun 06
Jul
Aug
Sep
Oct
Nov
Dec
Jan 07
Feb
Mar
Apr
May
Jun
Jul
Time

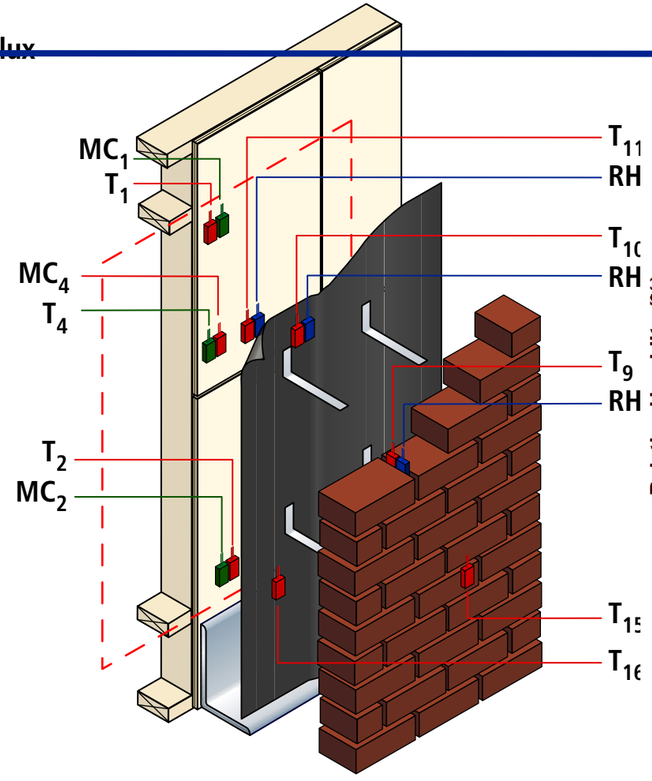
MC_1
T_1
MC_4
T_4
T_2
MC_2
T_{11}
RH
T_{10}
RH
T_9
RH
T_{15}
T_{16}

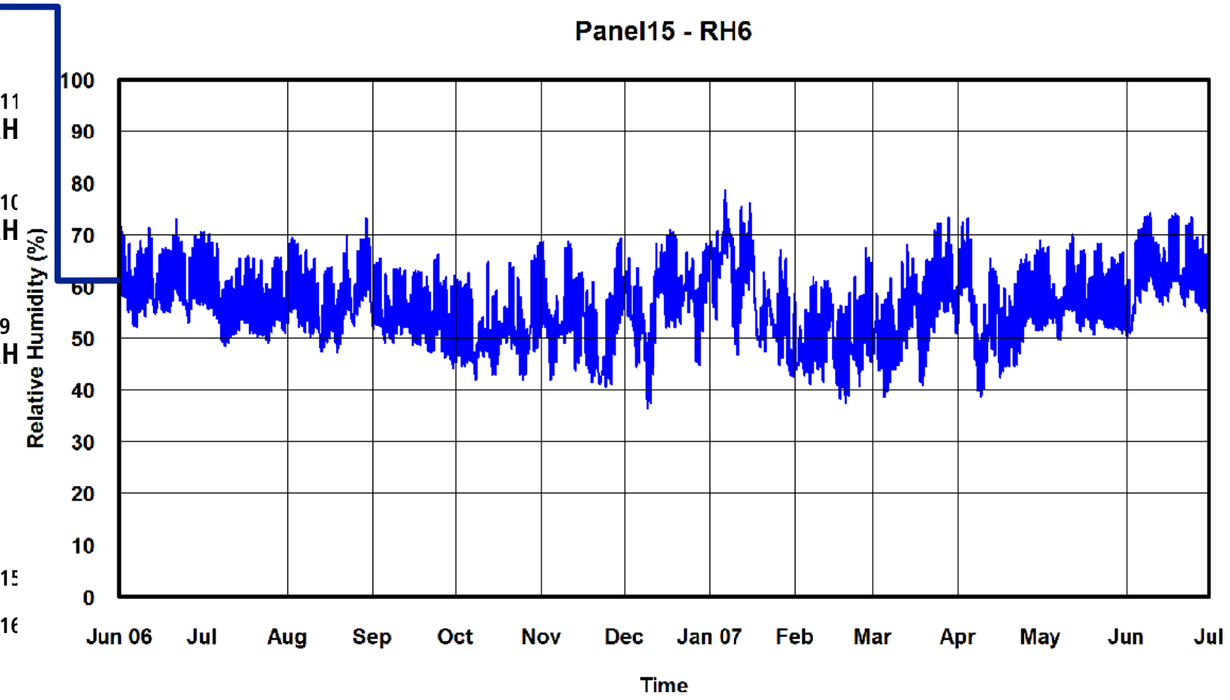
Panel15 - RH6
Relative Humidity (%)
100
90
80
70
60
50
40
30
20
10
0
Jun 06
Jul
Aug
Sep
Oct
Nov
Dec
Jan 07
Feb
Mar
Apr
May
Jun
Jul
Time

Panel 15

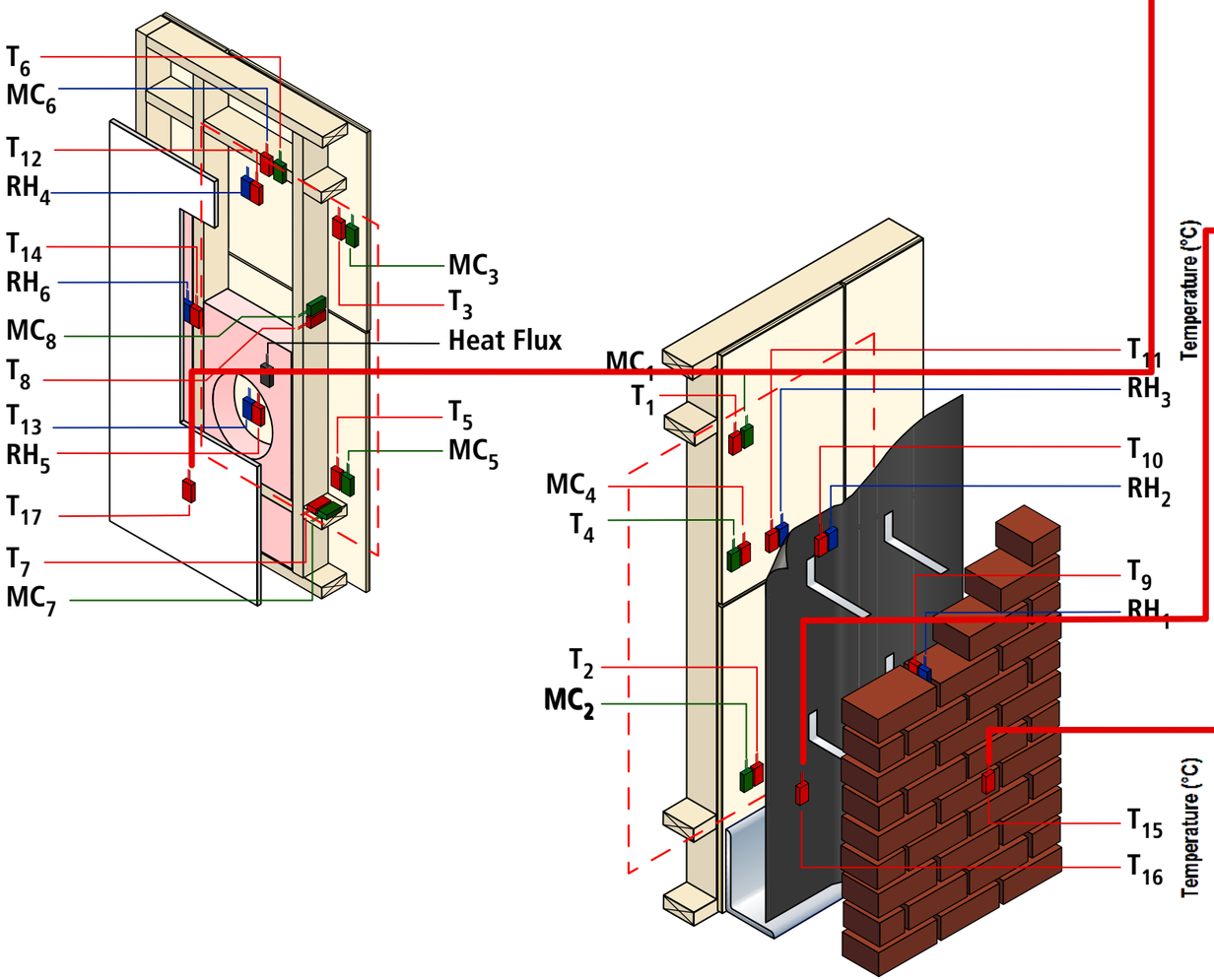
T_6
MC_6
T_{12}
RH_4
T_{14}
RH_6
MC_8
T_8
T_{13}
RH_5
T_{17}
T_7
MC_7
MC_3
T_3
Heat Flux
T_5
MC_5
MC_1
T_1
MC_4
T_4
T_2
MC_2
T_{11}
RH_3
T_{10}
RH_2
T_9
RH_1
T_{15}
T_{16}

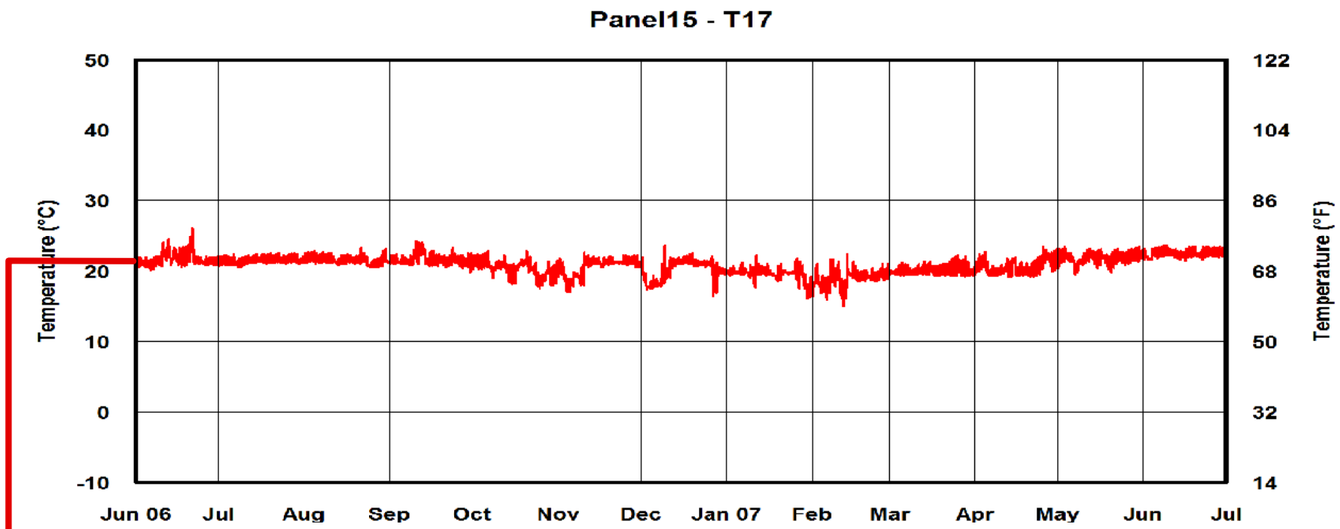
Panel15 - T17
Temperature (°C)
Temperature (°F)
50
40
30
20
10
0
-10
122
104
86
68
50
32
14
Jun 06
Jul
Aug
Sep
Oct
Nov
Dec
Jan 07
Feb
Mar
Apr
May
Jun
Jul

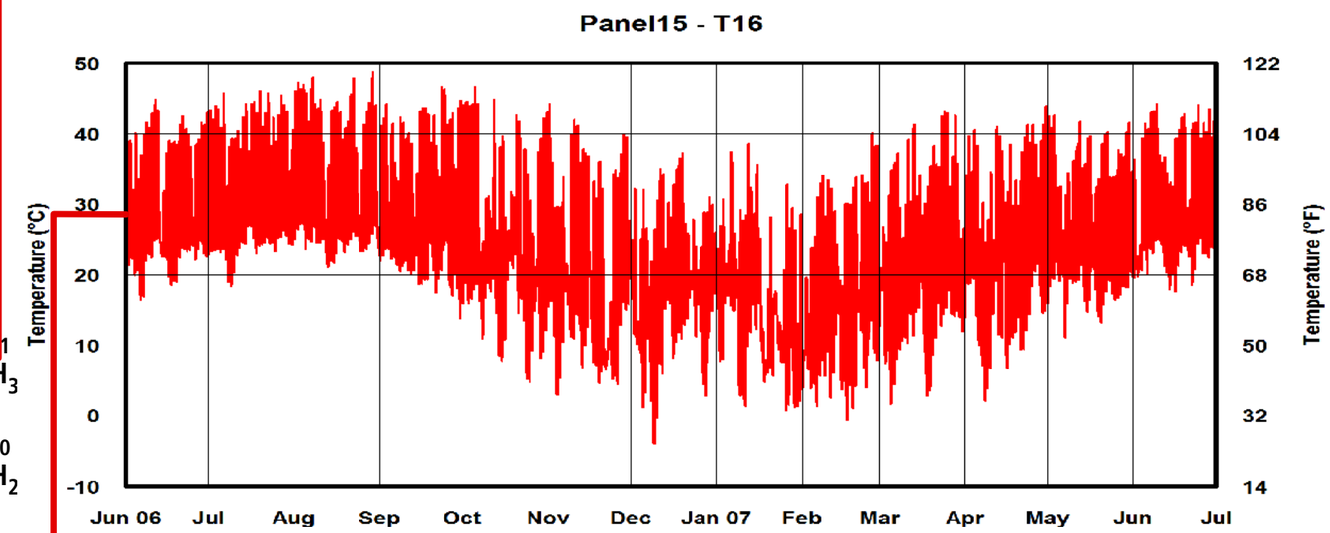
Panel15 - T16
Temperature (°C)
Temperature (°F)
50
40
30
20
10
0
-10
122
104
86
68
50
32
14
Jun 06
Jul
Aug
Sep
Oct
Nov
Dec
Jan 07
Feb
Mar
Apr
May
Jun
Jul

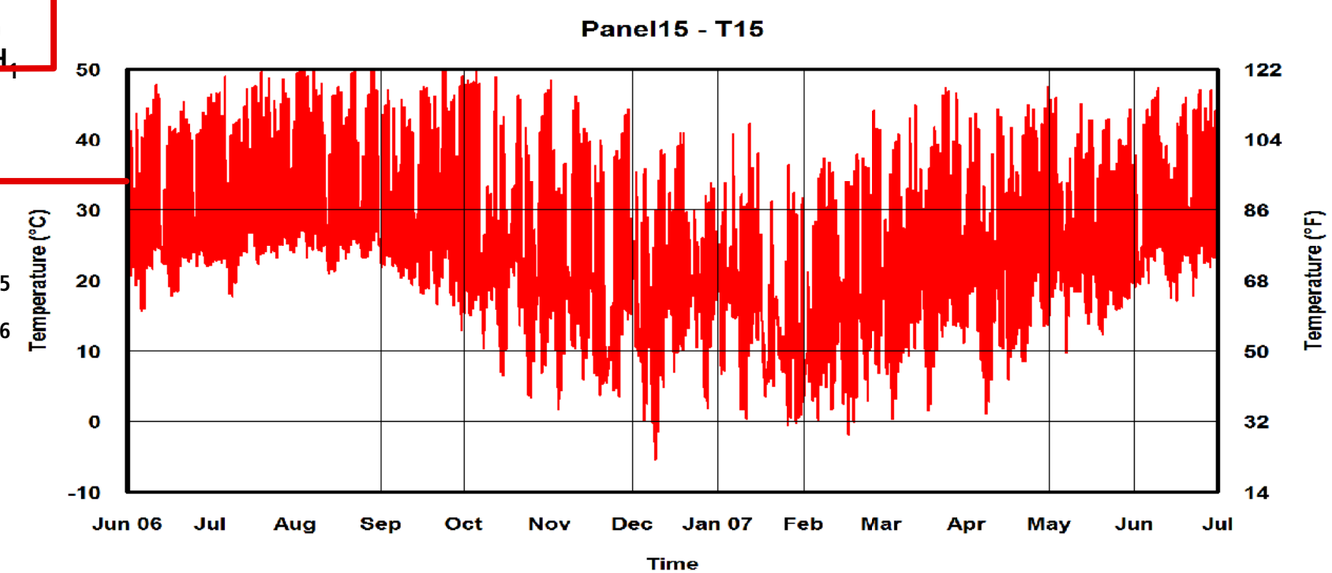
Panel15 - T15
Temperature (°C)
Temperature (°F)
50
40
30
20
10
0
-10
122
104
86
68
50
32
14
Jun 06
Jul
Aug
Sep
Oct
Nov
Dec
Jan 07
Feb
Mar
Apr
May
Jun
Jul
Time

Panel 15

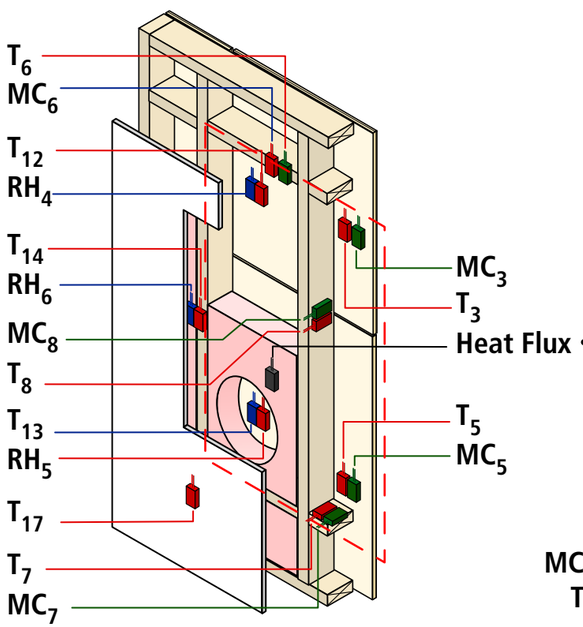
T_6
MC_6
T_{12}
RH_4
T_{14}
RH_6
MC_8
T_8
T_{13}
RH_5
T_{17}
T_7
MC_7
MC_3
T_3
Heat Flux
T_5
MC_5

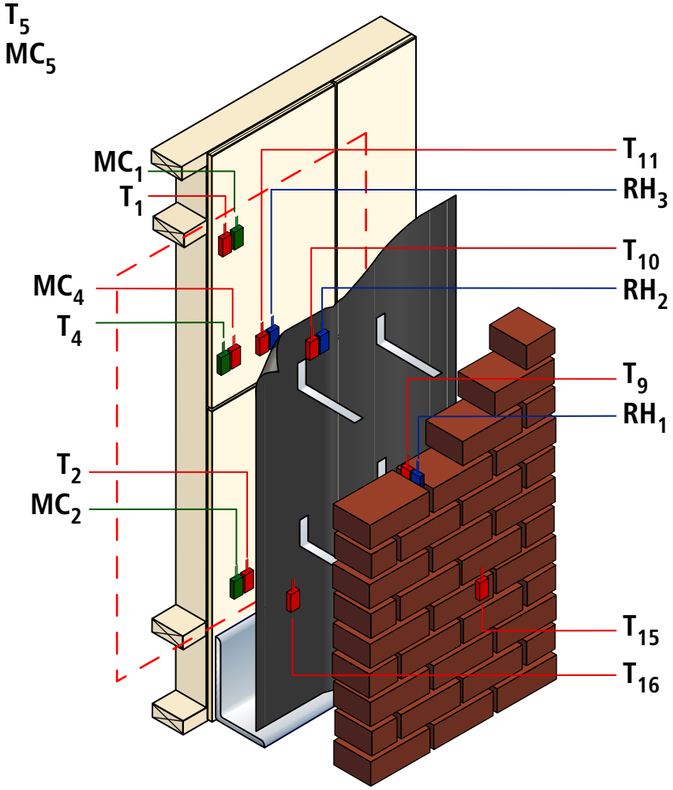
MC_1
T_1
MC_4
T_4
T_2
MC_2
T_{11}
RH_3
T_{10}
RH_2
T_9
RH_1
T_{15}
T_{16}

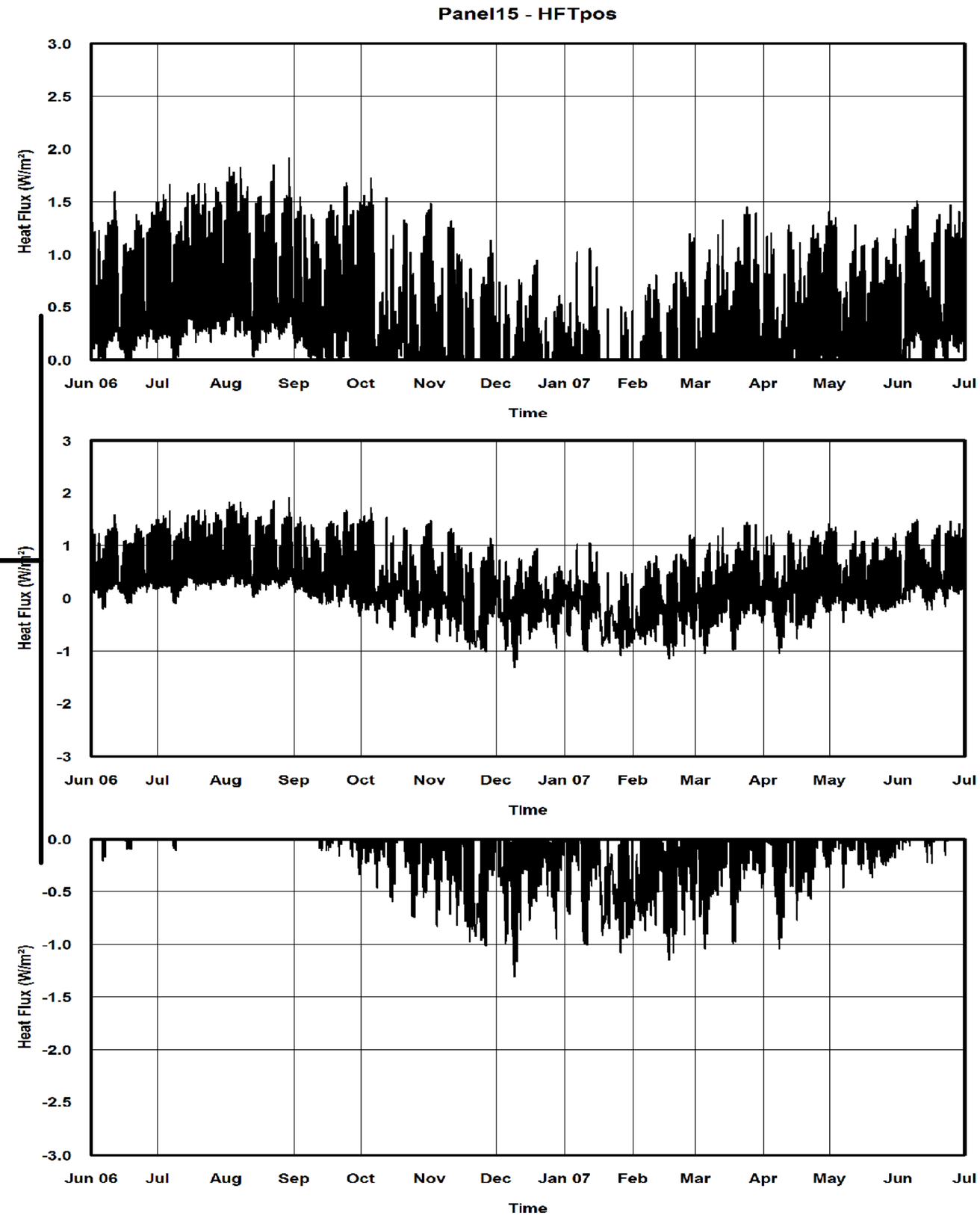
Panel15 - HFTpos
Heat Flux (W/m²)
3.0
2.5
2.0
1.5
1.0
0.5
0.0
Jun 06
Jul
Aug
Sep
Oct
Nov
Dec
Jan 07
Feb
Mar
Apr
May
Jun
Jul
Time
3
2
1
0
-1
-2
-3
0.0
-0.5
-1.0
-1.5
-2.0
-2.5
-3.0

Panel 16

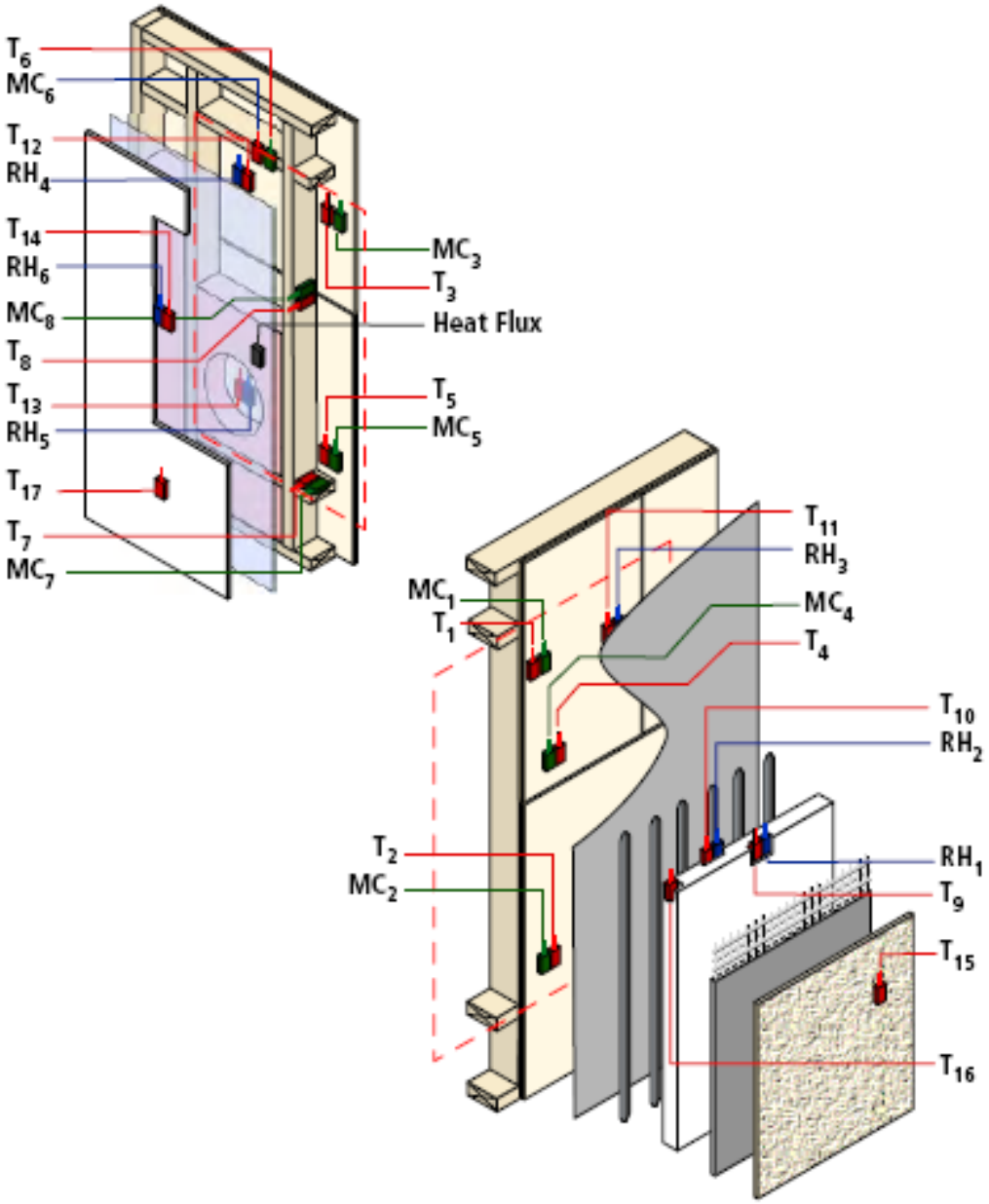
T_6
MC_6
T_{12}
RH_4
T_{14}
RH_6
MC_8
T_8
T_{13}
RH_5
T_{17}
T_7
MC_7
MC_3
T_3
Heat Flux
T_5
MC_5
T_{11}
RH_3
MC_1
T_1
MC_4
T_4
T_{10}
RH_2
T_2
MC_2
RH_1
T_9
T_{15}
T_{16}

Panel 16

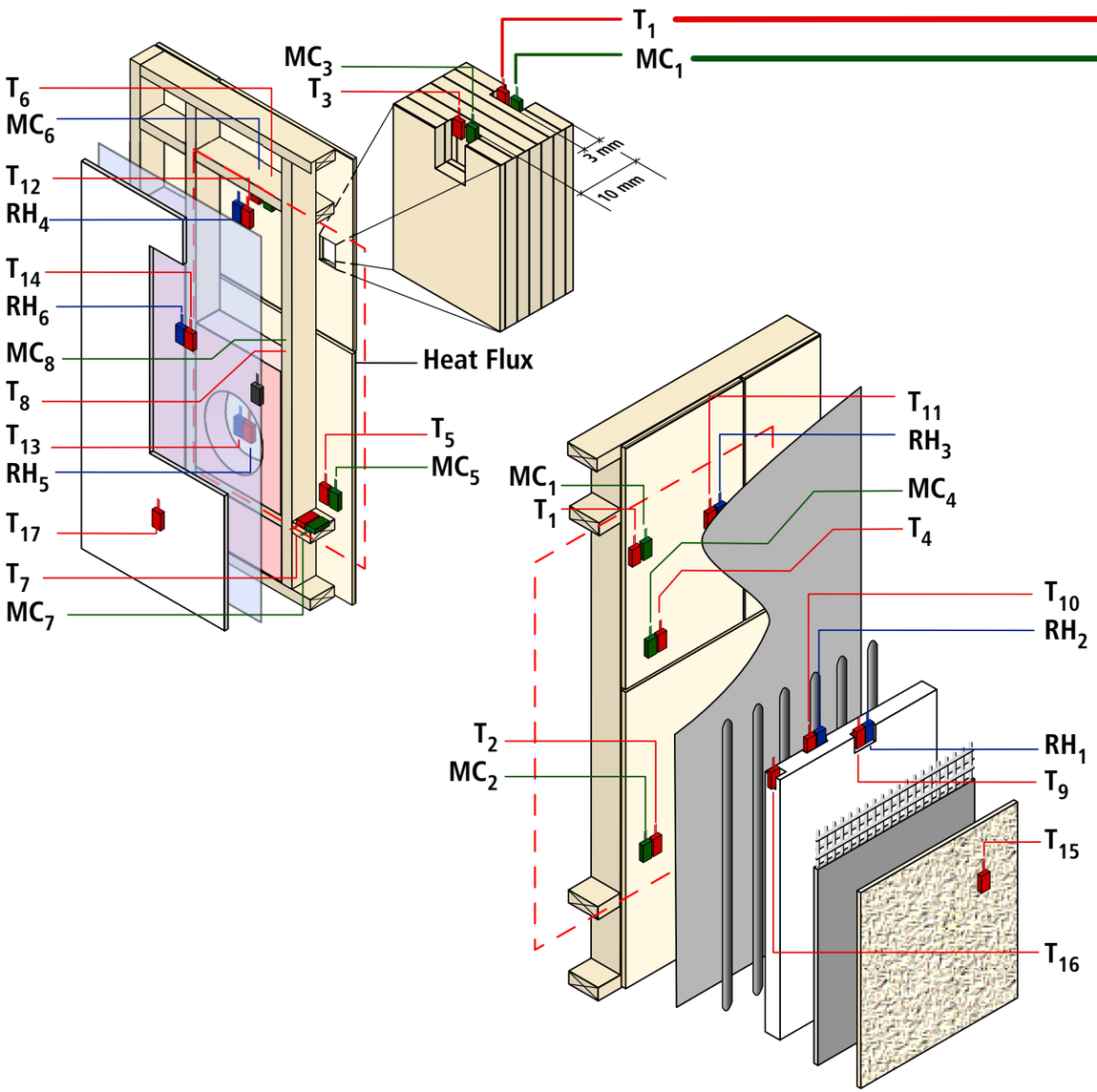
T1
MC1
MC3
T3
T6
MC6
T12
RH4
T14
RH6
MC8
T8
T13
RH5
T17
T7
MC7
3 mm
10 mm
Heat Flux
T5
MC5
T11
RH3
MC4
T4
T10
RH2
RH1
T9
T15
T16
T2
MC2

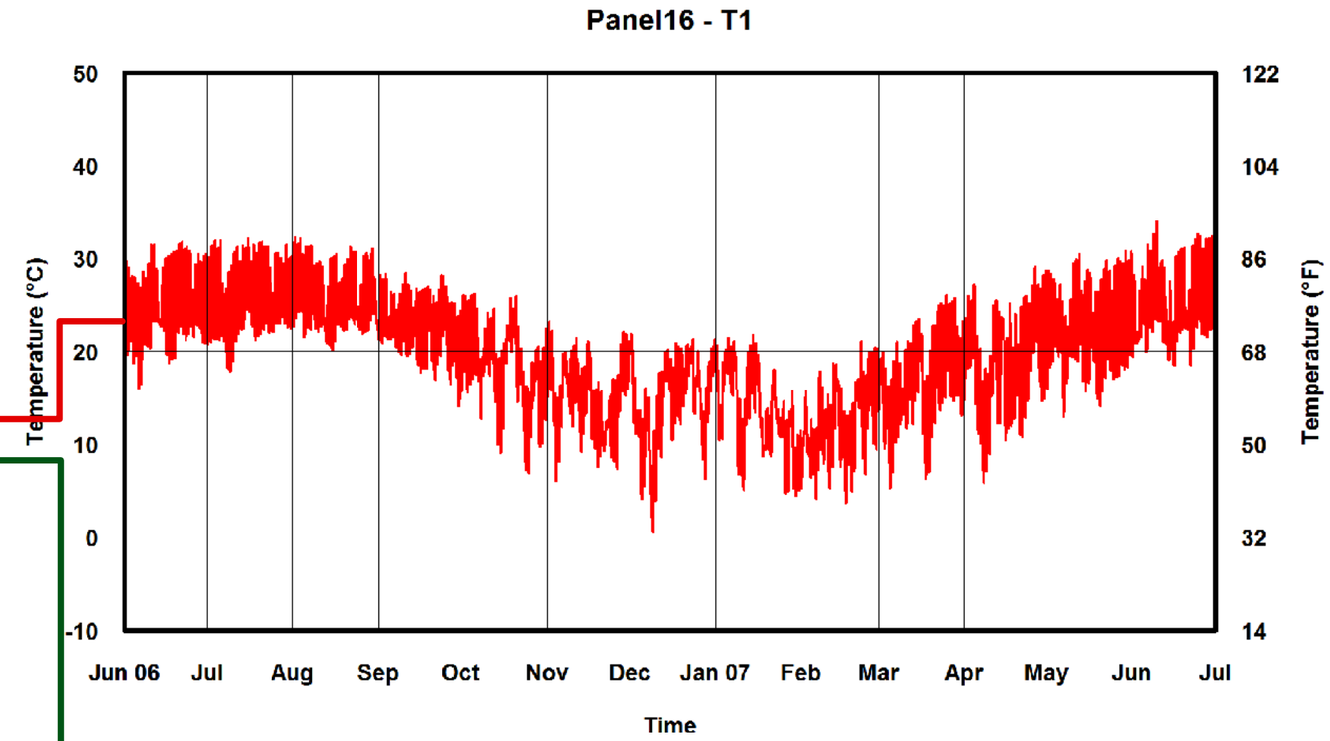
Panel16 - T1
Temperature (°C)
Temperature (°F)
50
40
30
20
10
0
-10
122
104
86
68
50
32
14
Jun 06
Jul
Aug
Sep
Oct
Nov
Dec
Jan 07
Feb
Mar
Apr
May
Jun
Jul
Time

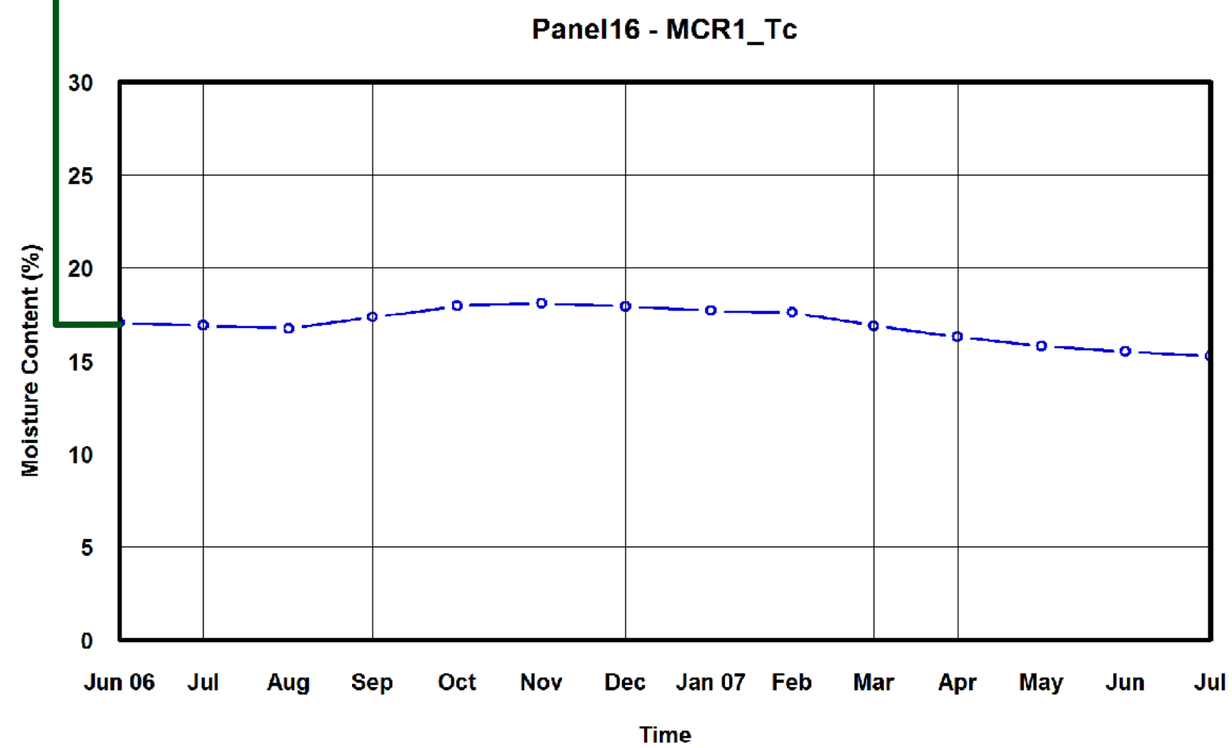
Panel16 - MCR1_Tc
Moisture Content (%)
30
25
20
15
10
5
0
Jun 06
Jul
Aug
Sep
Oct
Nov
Dec
Jan 07
Feb
Mar
Apr
May
Jun
Jul
Time

Panel 16

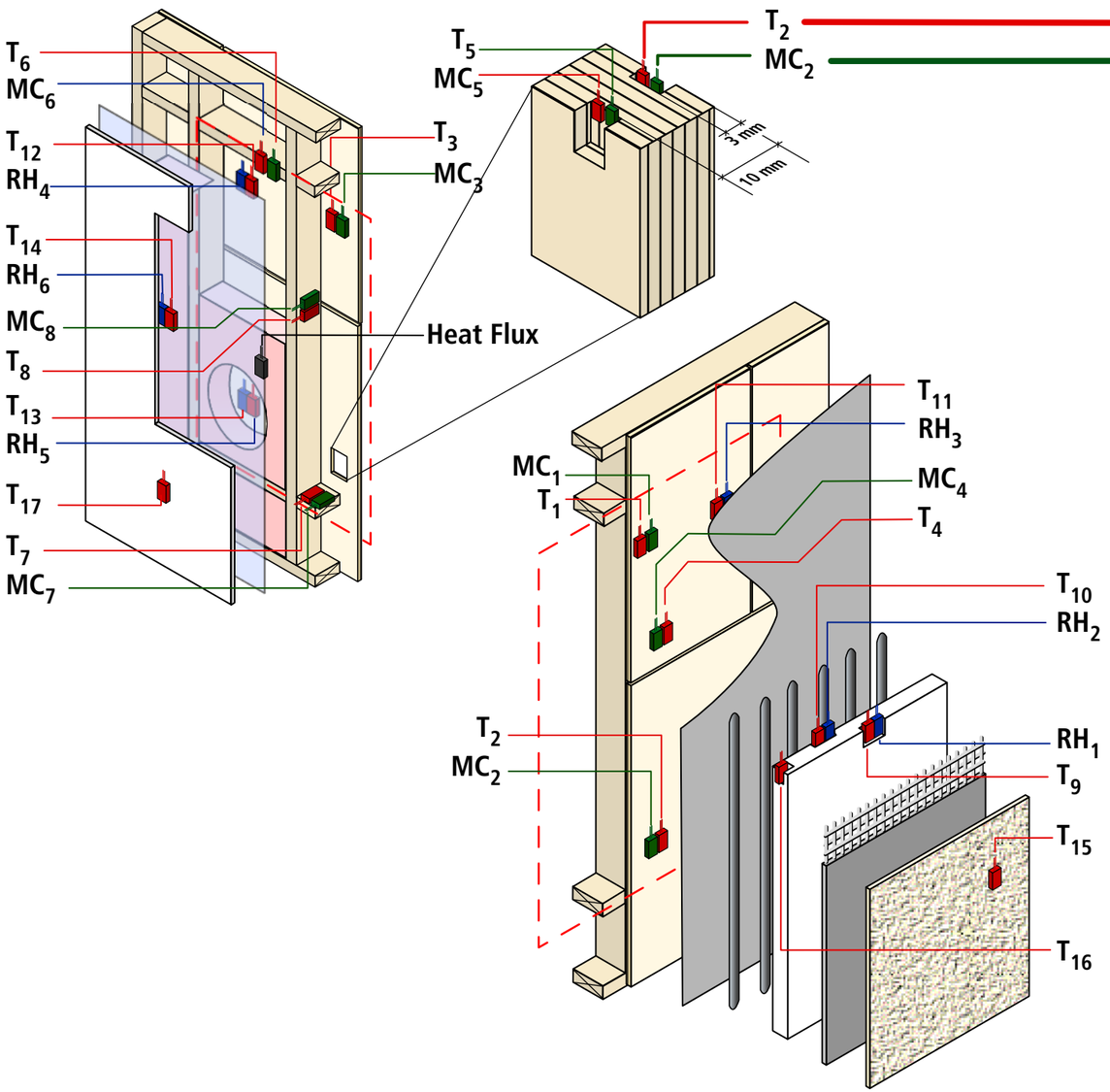
T6
MC6
T12
RH4
T14
RH6
MC8
T8
T13
RH5
T17
T7
MC7
T5
MC5
T2
MC2
T3
MC3
3 mm
10 mm
Heat Flux
MC1
T1
T11
RH3
MC4
T4
T10
RH2
T2
MC2
RH1
T9
T15
T16

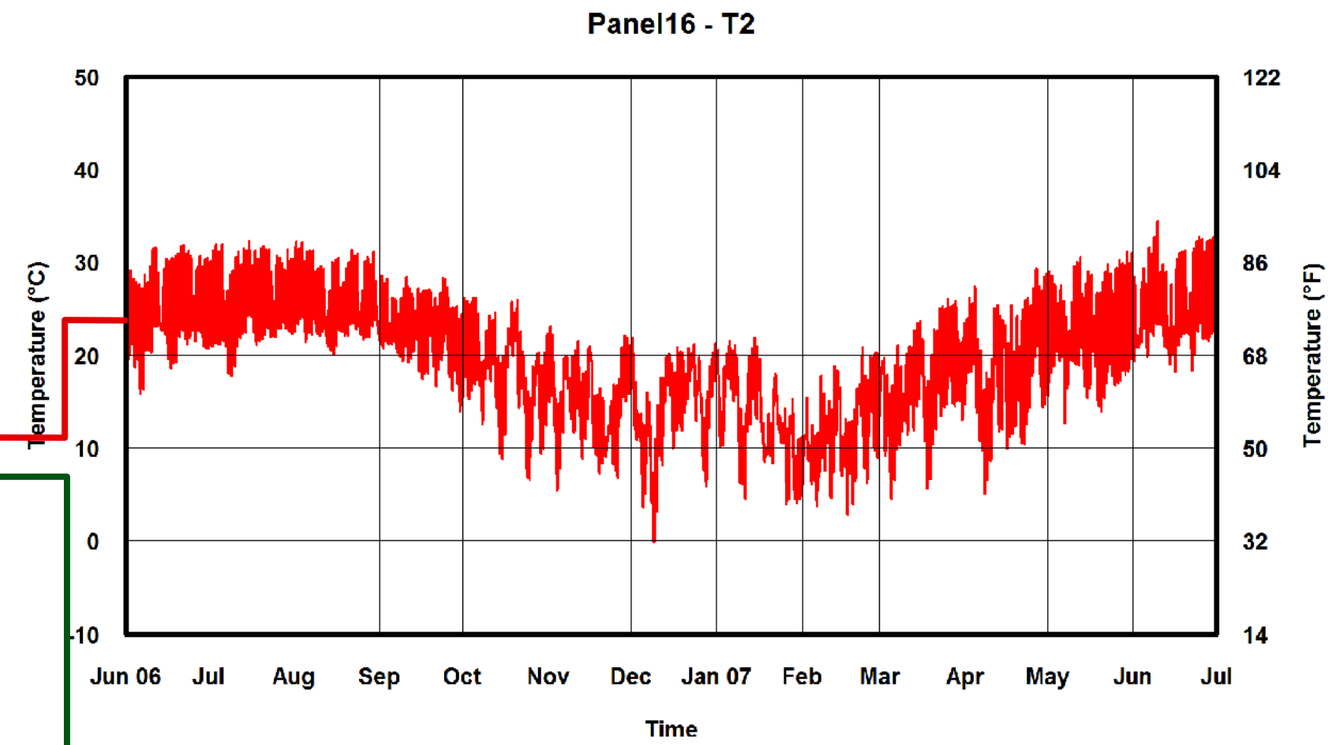
Panel16 - T2
Temperature (°C)
Temperature (°F)
50
40
30
20
10
0
-10
122
104
86
68
50
32
14
Jun 06
Jul
Aug
Sep
Oct
Nov
Dec
Jan 07
Feb
Mar
Apr
May
Jun
Jul
Time

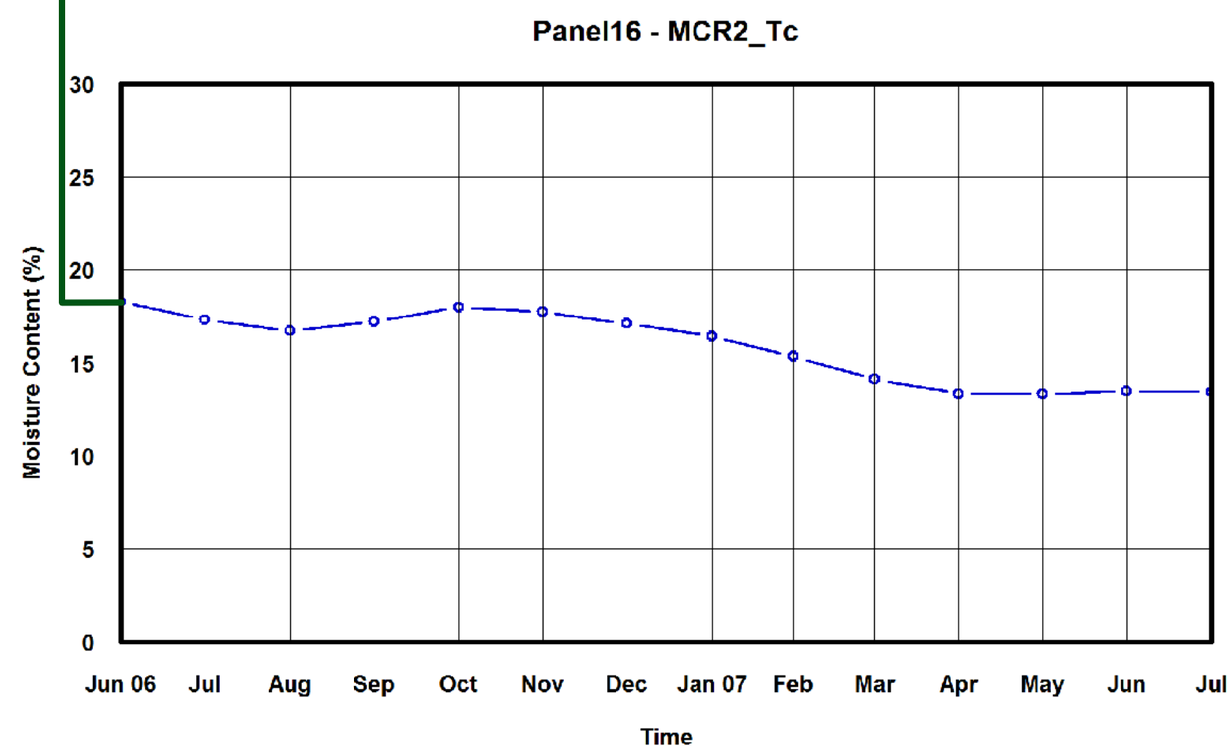
Panel16 - MCR2_Tc
Moisture Content (%)
30
25
20
15
10
5
0
Jun 06
Jul
Aug
Sep
Oct
Nov
Dec
Jan 07
Feb
Mar
Apr
May
Jun
Jul
Time

Panel 16

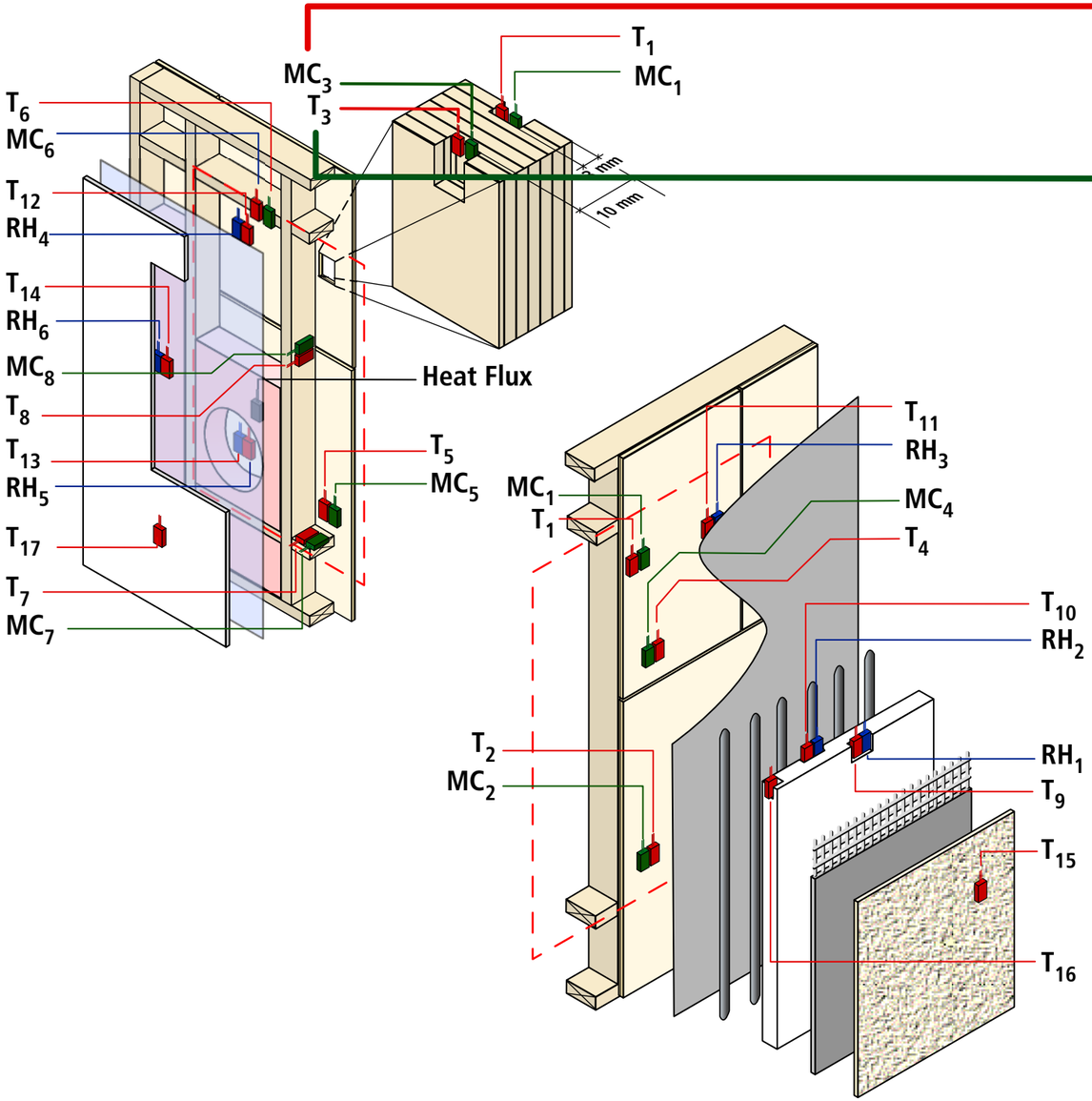
T_6
MC_6
T_{12}
RH_4
T_{14}
RH_6
MC_8
T_8
T_{13}
RH_5
T_{17}
T_7
MC_7
MC_3
T_3
T_1
MC_1
5 mm
10 mm
Heat Flux
T_5
MC_5
MC_1
T_1
T_{11}
RH_3
MC_4
T_4
T_{10}
RH_2
T_2
MC_2
RH_1
T_9
T_{15}
T_{16}

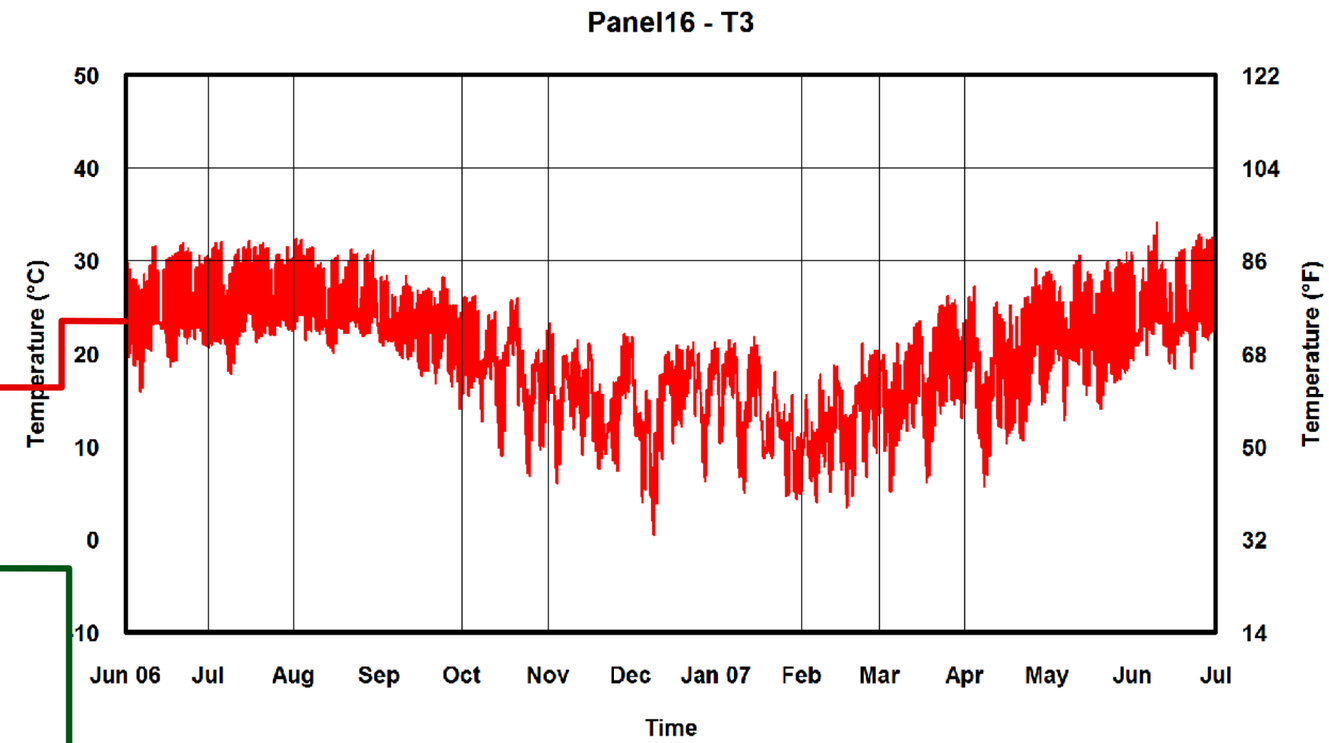
Panel16 - T3
Temperature (°C)
Temperature (°F)
50
40
30
20
10
0
-10
122
104
86
68
50
32
14
Jun 06
Jul
Aug
Sep
Oct
Nov
Dec
Jan 07
Feb
Mar
Apr
May
Jun
Jul
Time

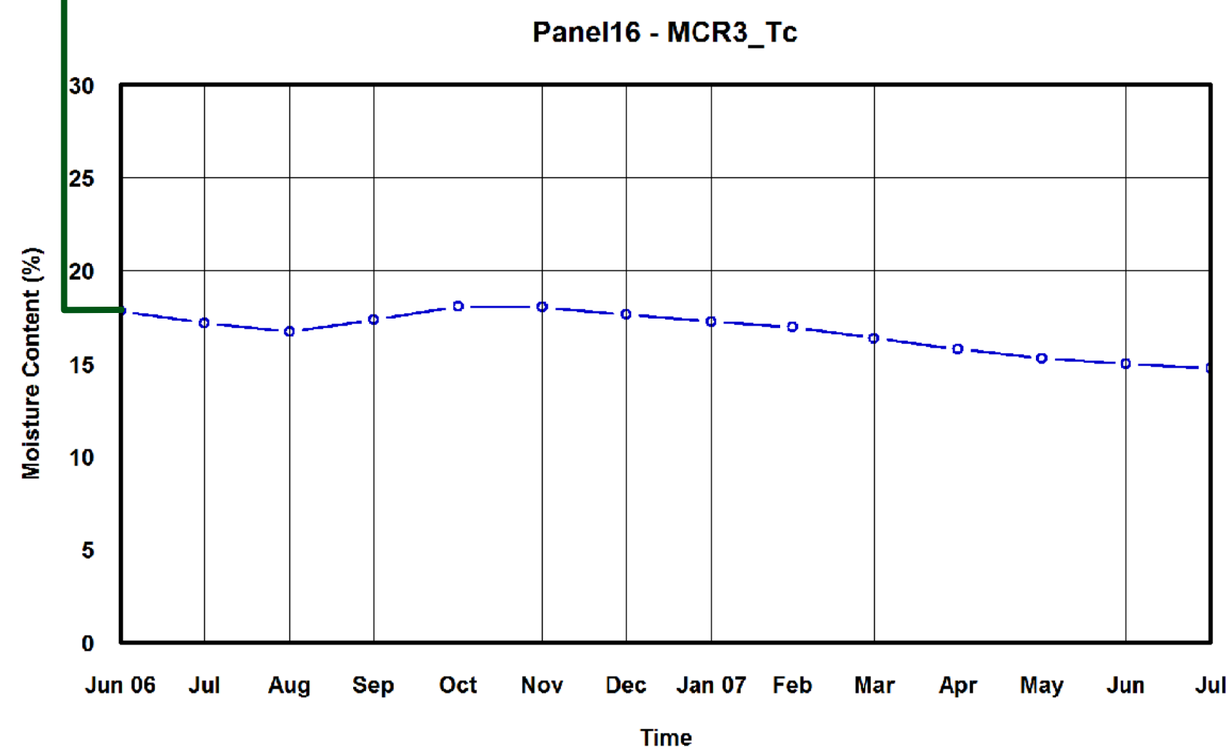
Panel16 - MCR3_Tc
Moisture Content (%)
30
25
20
15
10
5
0
Jun 06
Jul
Aug
Sep
Oct
Nov
Dec
Jan 07
Feb
Mar
Apr
May
Jun
Jul
Time

Panel 16

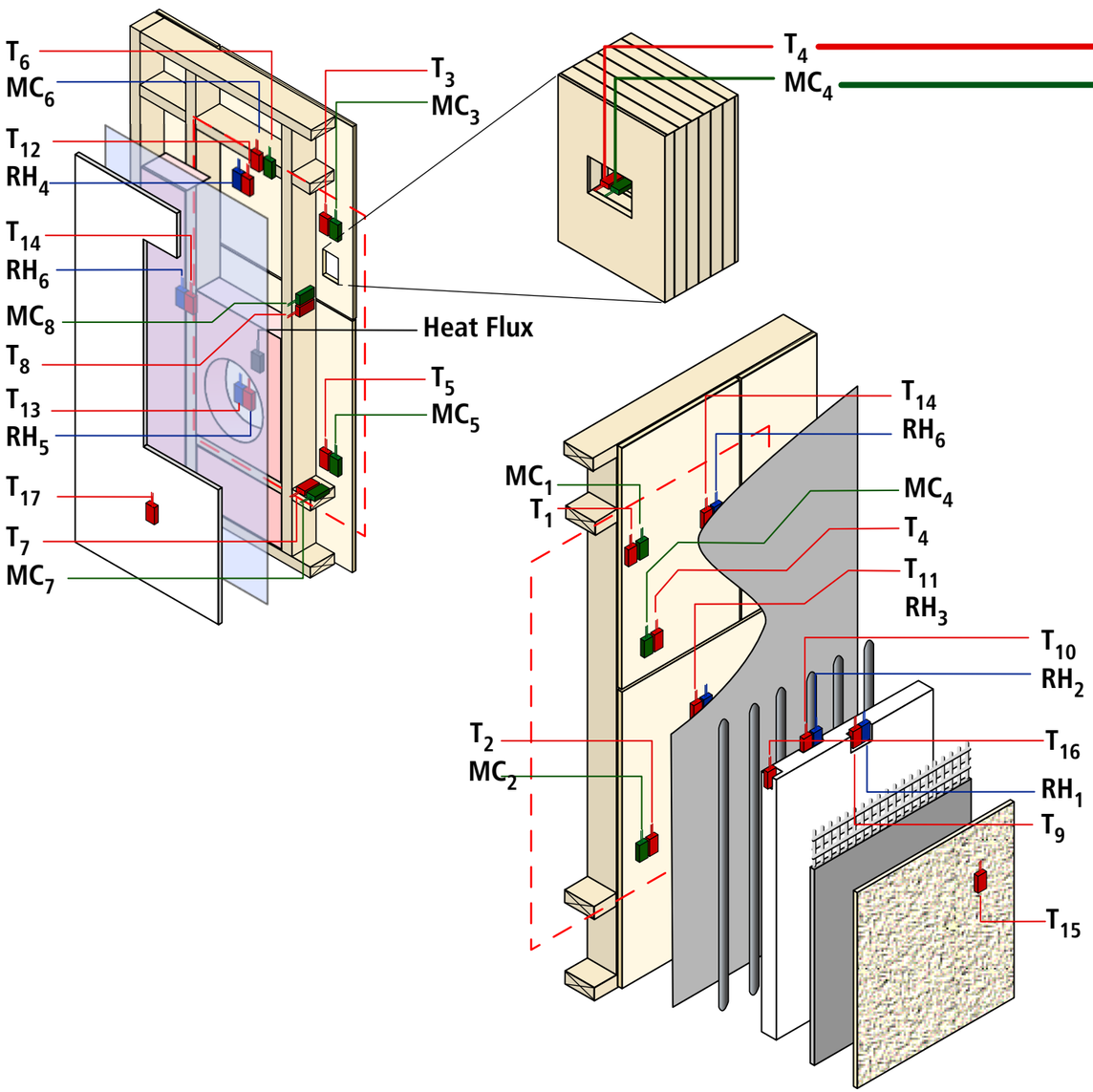
T_6
MC_6
T_{12}
RH_4
T_{14}
RH_6
MC_8
T_8
T_{13}
RH_5
T_{17}
T_7
MC_7
T_3
MC_3
Heat Flux
T_5
MC_5
T_4
MC_4
T_{14}
RH_6
MC_1
T_1
MC_4
T_4
T_{11}
RH_3
T_{10}
RH_2
T_2
MC_2
T_{16}
RH_1
T_9
T_{15}

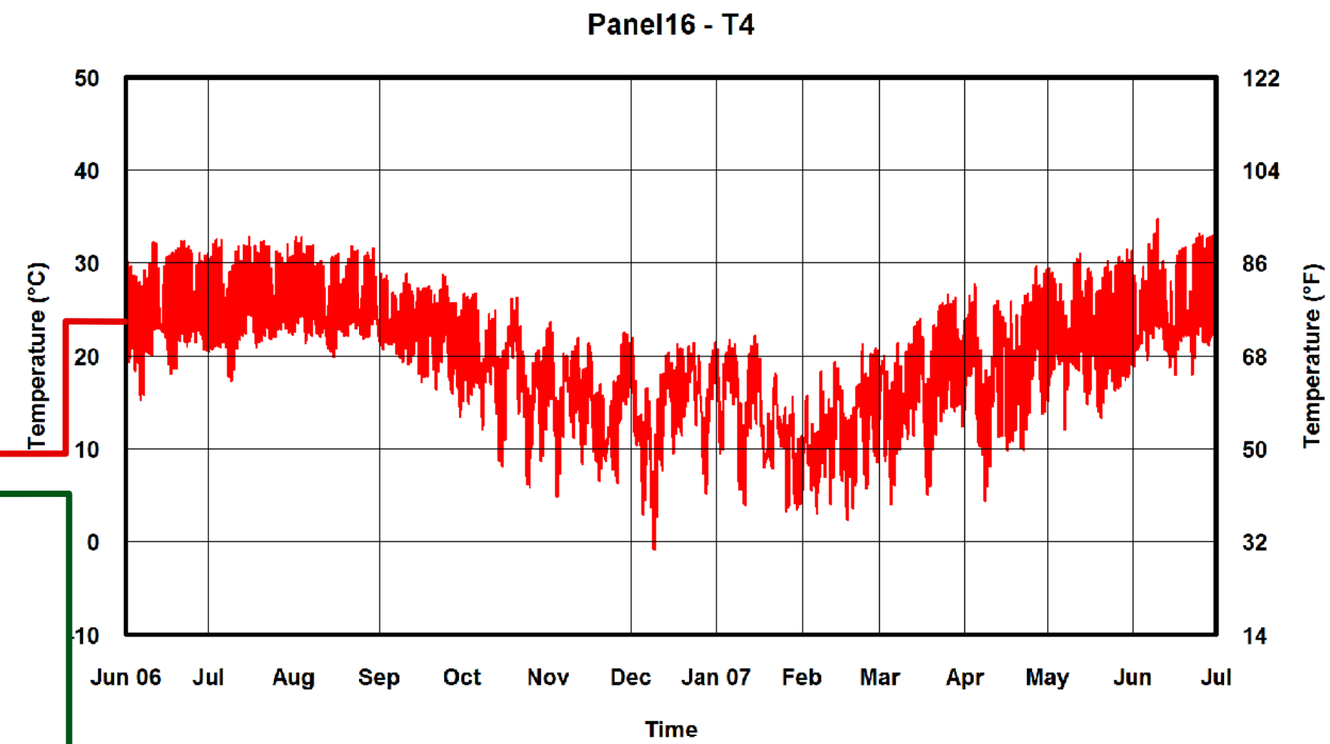
Panel16 - T4
Temperature (°C)
Temperature (°F)
50
40
30
20
10
0
-10
122
104
86
68
50
32
14
Jun 06
Jul
Aug
Sep
Oct
Nov
Dec
Jan 07
Feb
Mar
Apr
May
Jun
Jul
Time

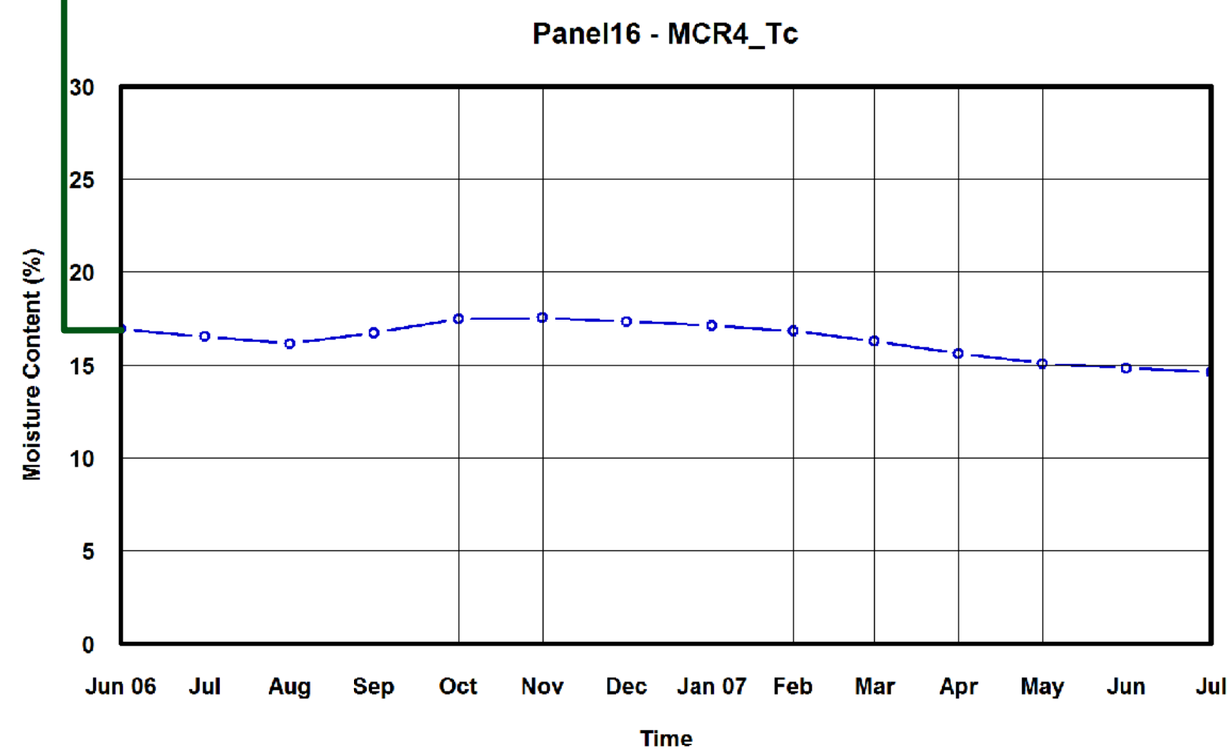
Panel16 - MCR4_Tc
Moisture Content (%)
30
25
20
15
10
5
0
Jun 06
Jul
Aug
Sep
Oct
Nov
Dec
Jan 07
Feb
Mar
Apr
May
Jun
Jul
Time

Panel 16

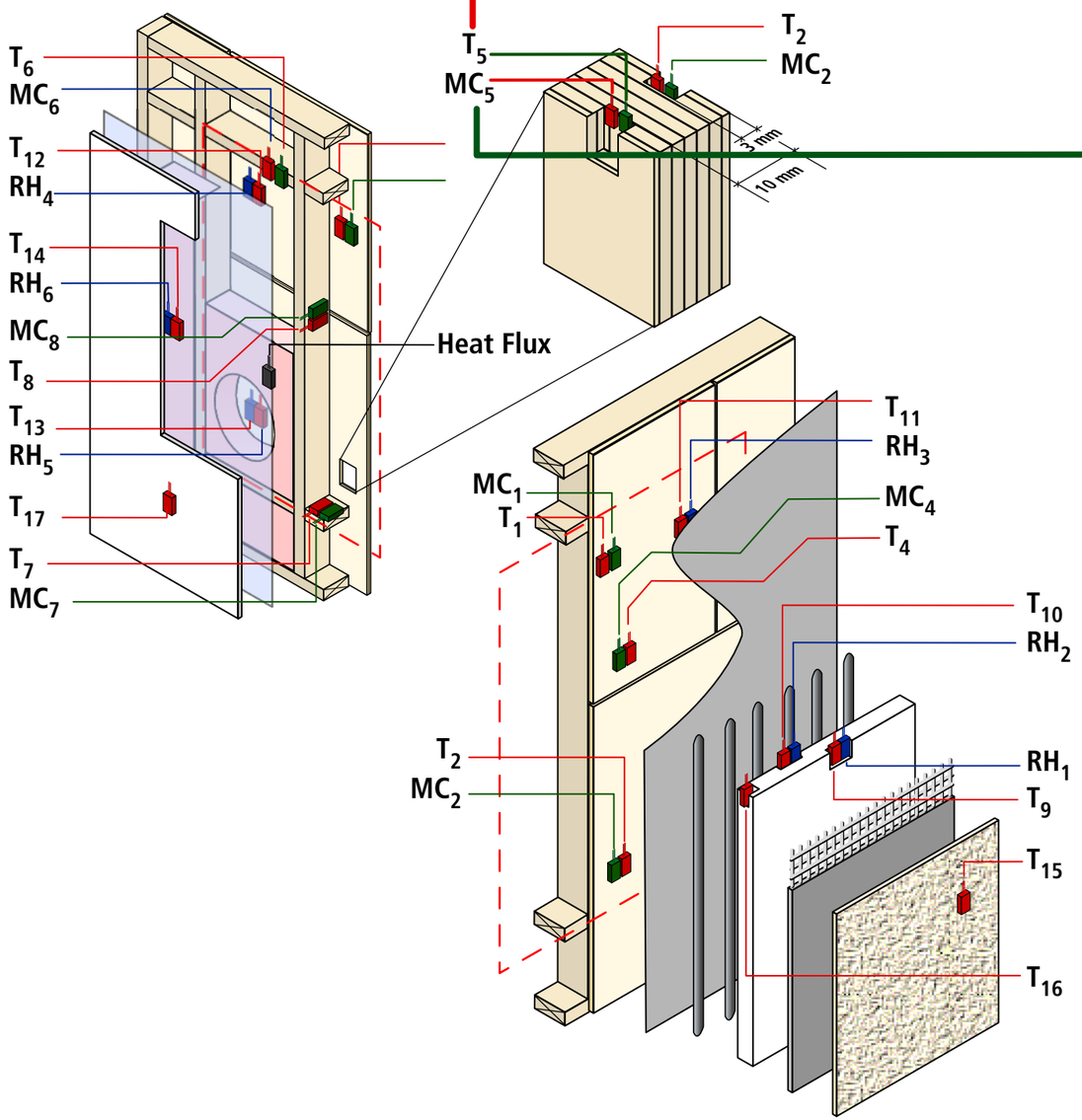
T_6
MC_6
T_{12}
RH_4
T_{14}
RH_6
MC_8
T_8
T_{13}
RH_5
T_{17}
T_7
MC_7
Heat Flux
T_5
MC_5
T_2
MC_2
3 mm
10 mm
T_{11}
RH_3
MC_4
T_4
MC_1
T_1
T_{10}
RH_2
T_2
MC_2
RH_1
T_9
T_{15}
T_{16}

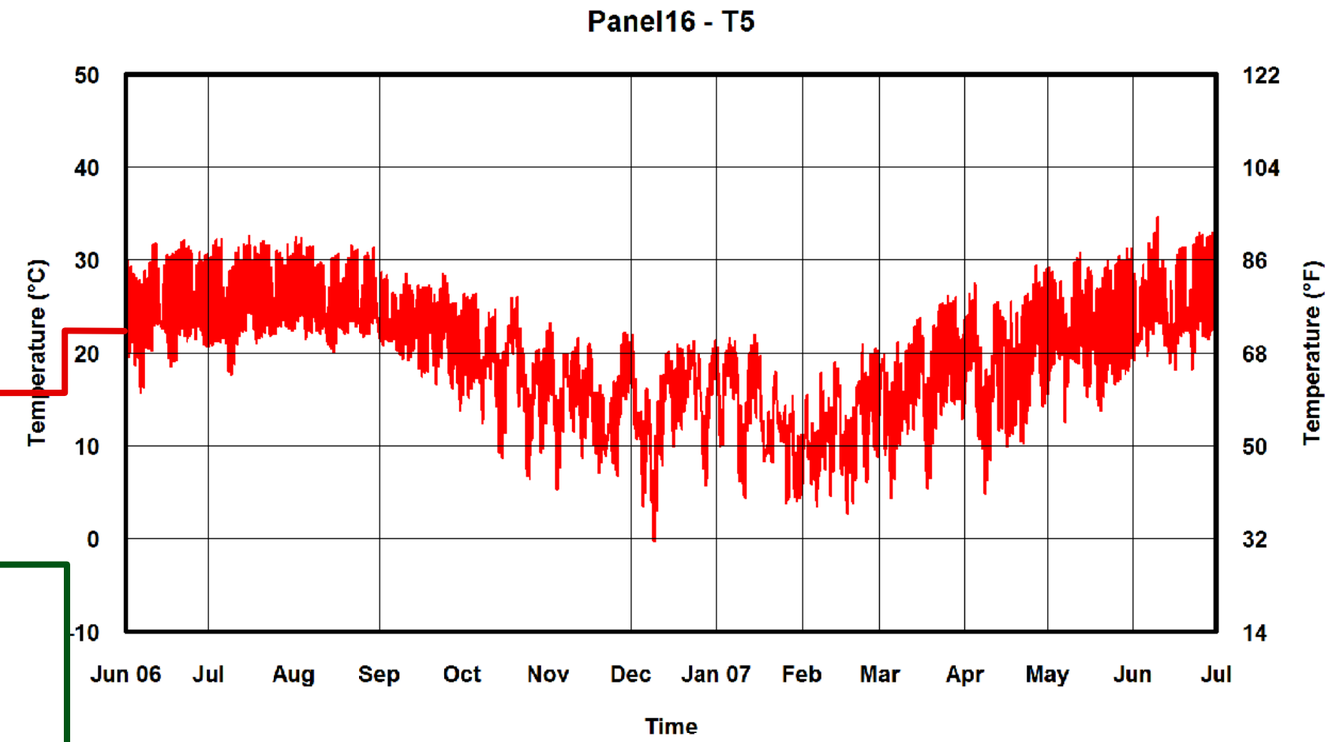
Panel16 - T5
Temperature (°C)
Temperature (°F)
50
40
30
20
10
0
-10
122
104
86
68
50
32
14
Jun 06
Jul
Aug
Sep
Oct
Nov
Dec
Jan 07
Feb
Mar
Apr
May
Jun
Jul
Time

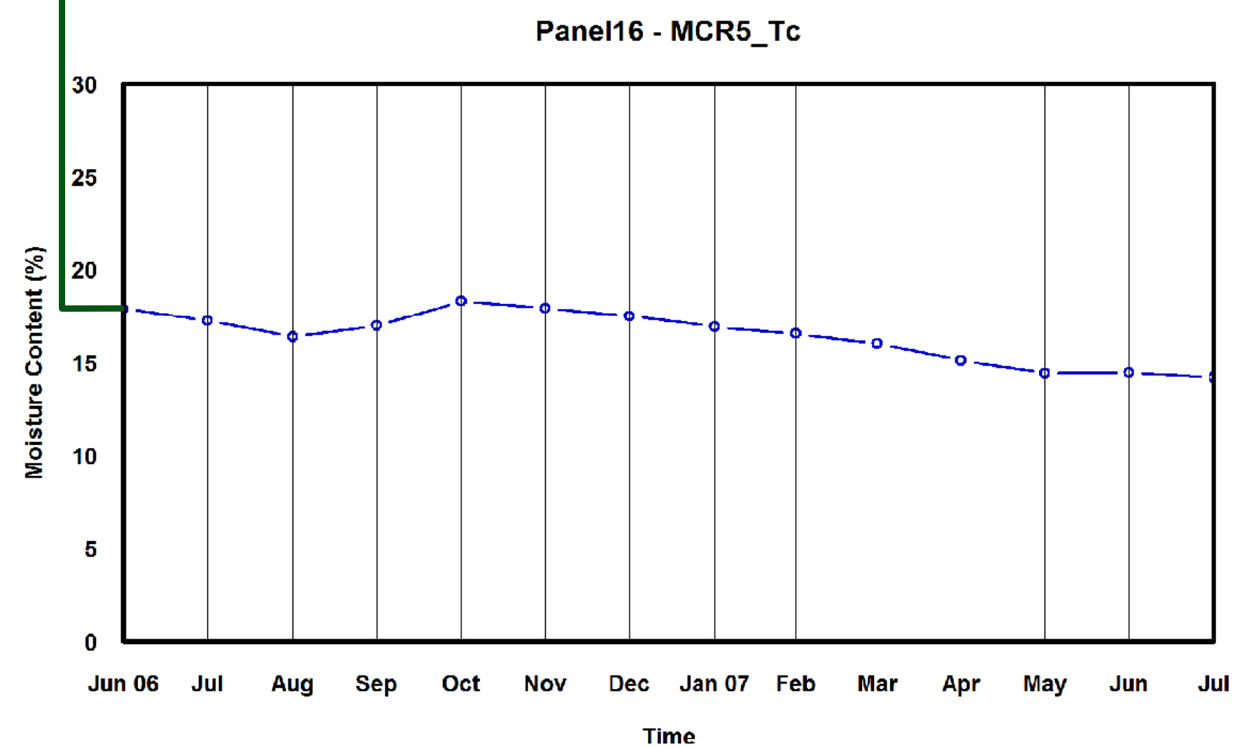
Panel16 - MCR5_Tc
Moisture Content (%)
30
25
20
15
10
5
0
Jun 06
Jul
Aug
Sep
Oct
Nov
Dec
Jan 07
Feb
Mar
Apr
May
Jun
Jul
Time

Panel 16

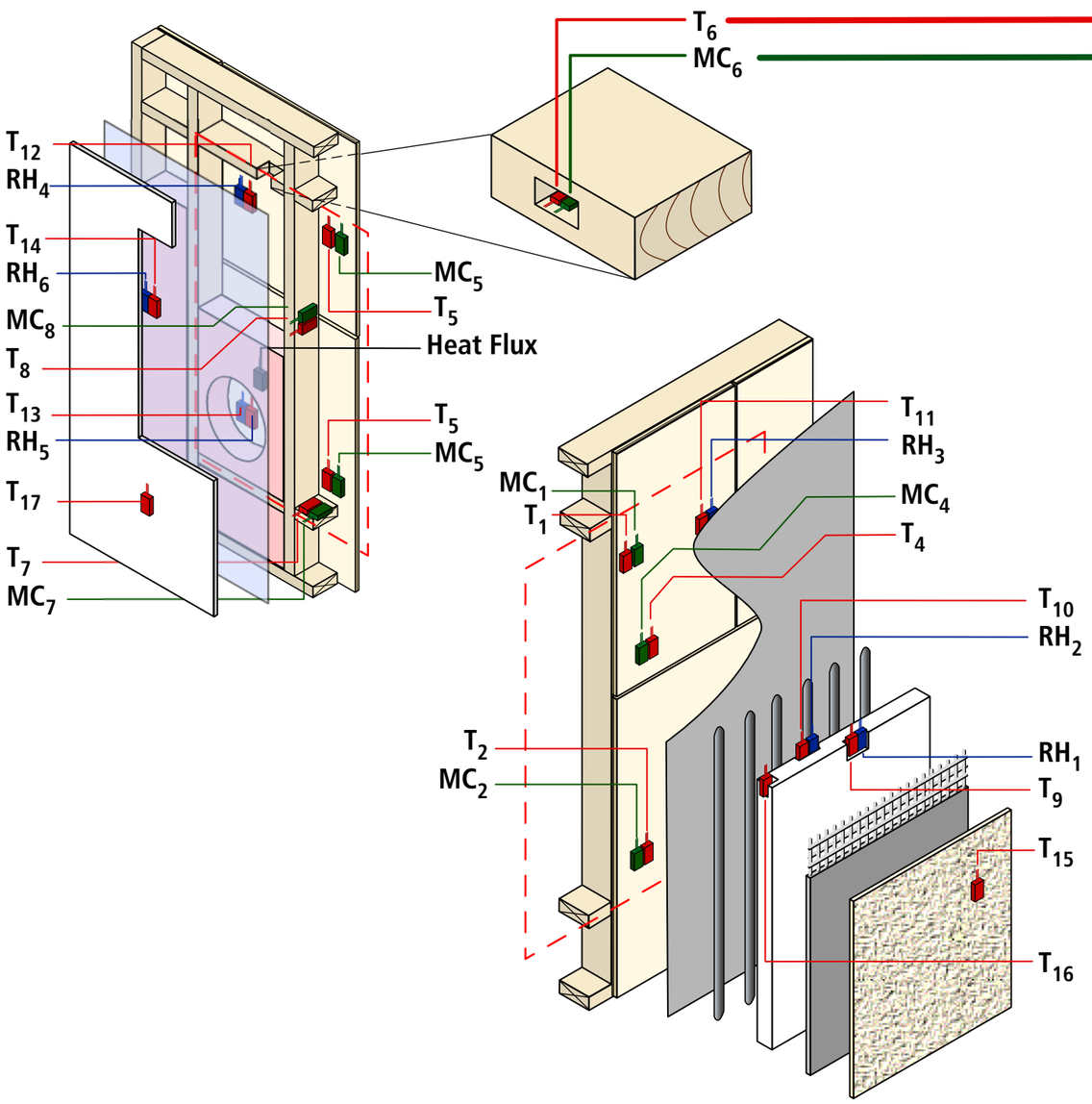
T6
MC6
T12
RH4
T14
RH6
MC8
T8
T13
RH5
T17
T7
MC7
MC5
T5
Heat Flux
T5
MC5
T11
RH3
MC1
T1
MC4
T4
T10
RH2
T2
MC2
RH1
T9
T15
T16

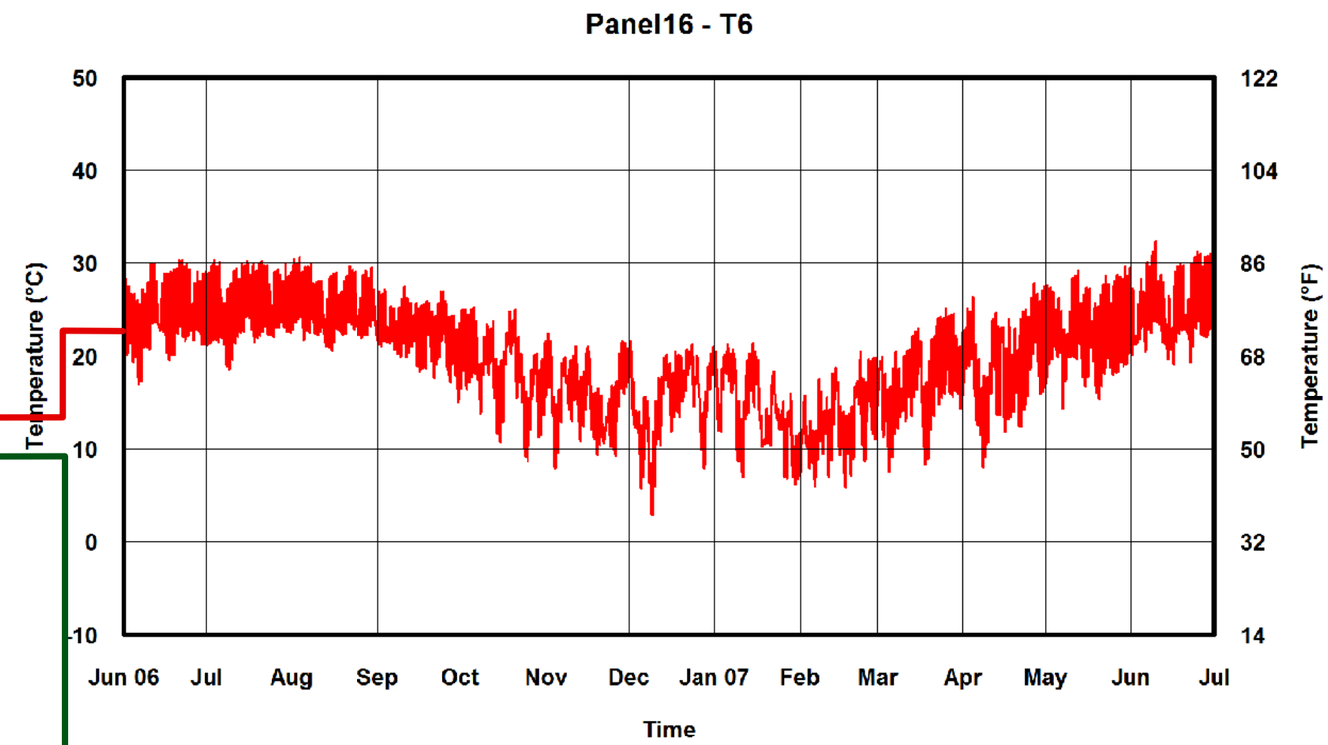
Panel16 - T6
Temperature (°C)
Temperature (°F)
50
40
30
20
10
0
-10
122
104
86
68
50
32
14
Jun 06
Jul
Aug
Sep
Oct
Nov
Dec
Jan 07
Feb
Mar
Apr
May
Jun
Jul
Time

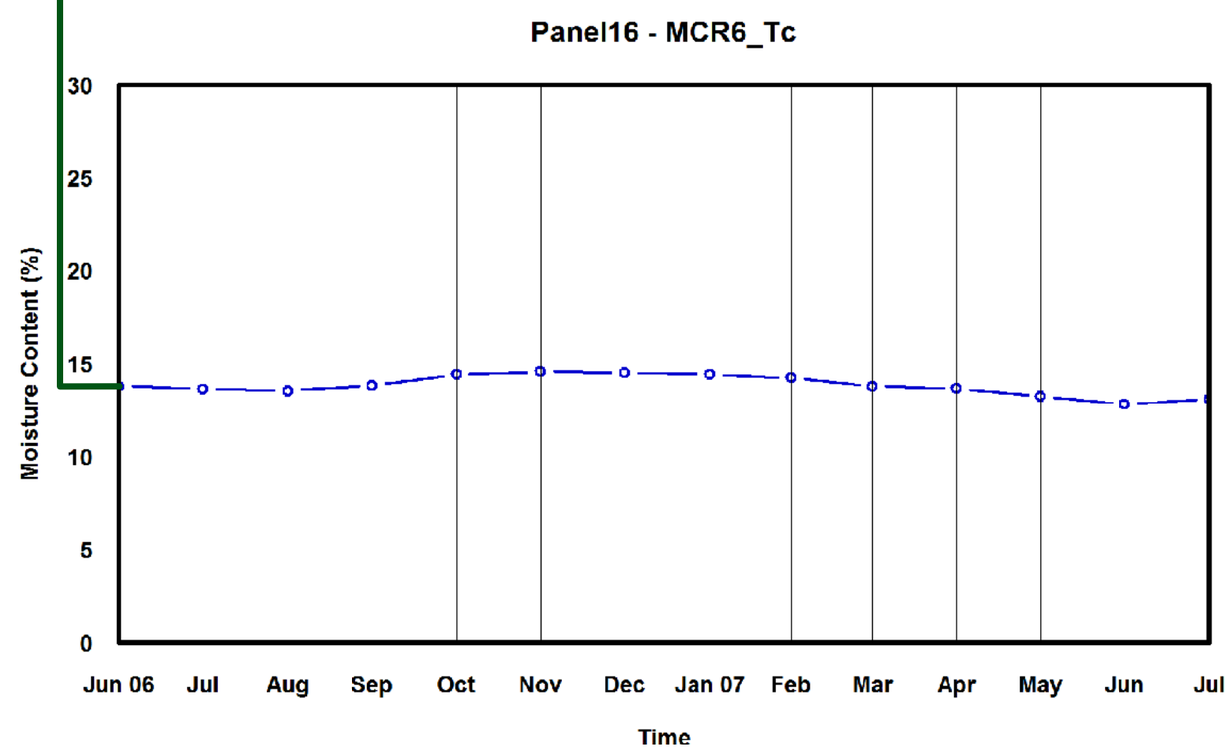
Panel16 - MCR6_Tc
Moisture Content (%)
30
25
20
15
10
5
0
Jun 06
Jul
Aug
Sep
Oct
Nov
Dec
Jan 07
Feb
Mar
Apr
May
Jun
Jul
Time

Panel 16

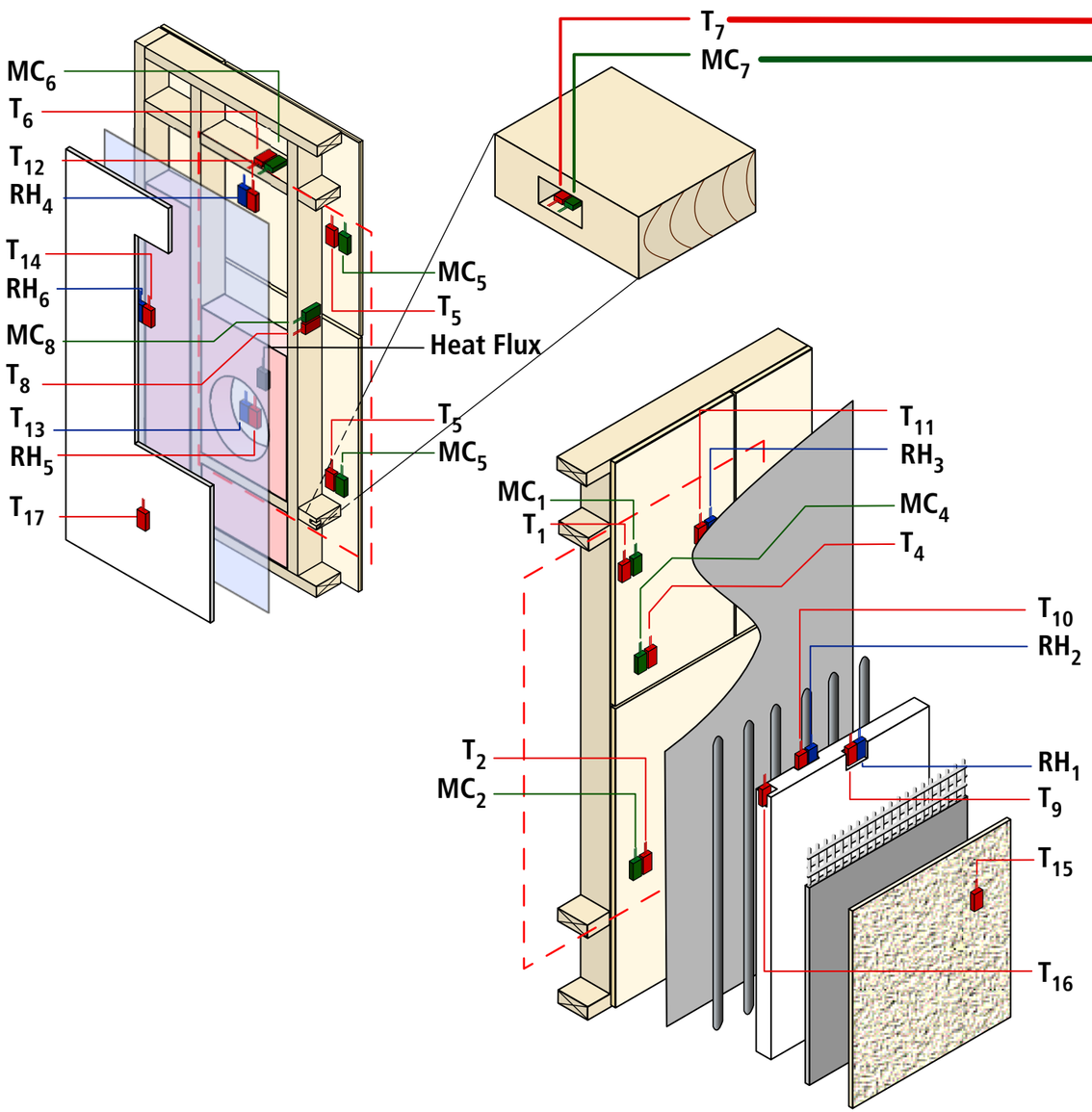
MC6
T6
T12
RH4
T14
RH6
MC8
T8
T13
RH5
T17
T7
MC7
MC5
T5
Heat Flux
T5
MC5
MC1
T1
T11
RH3
MC4
T4
T10
RH2
T2
MC2
RH1
T9
T15
T16

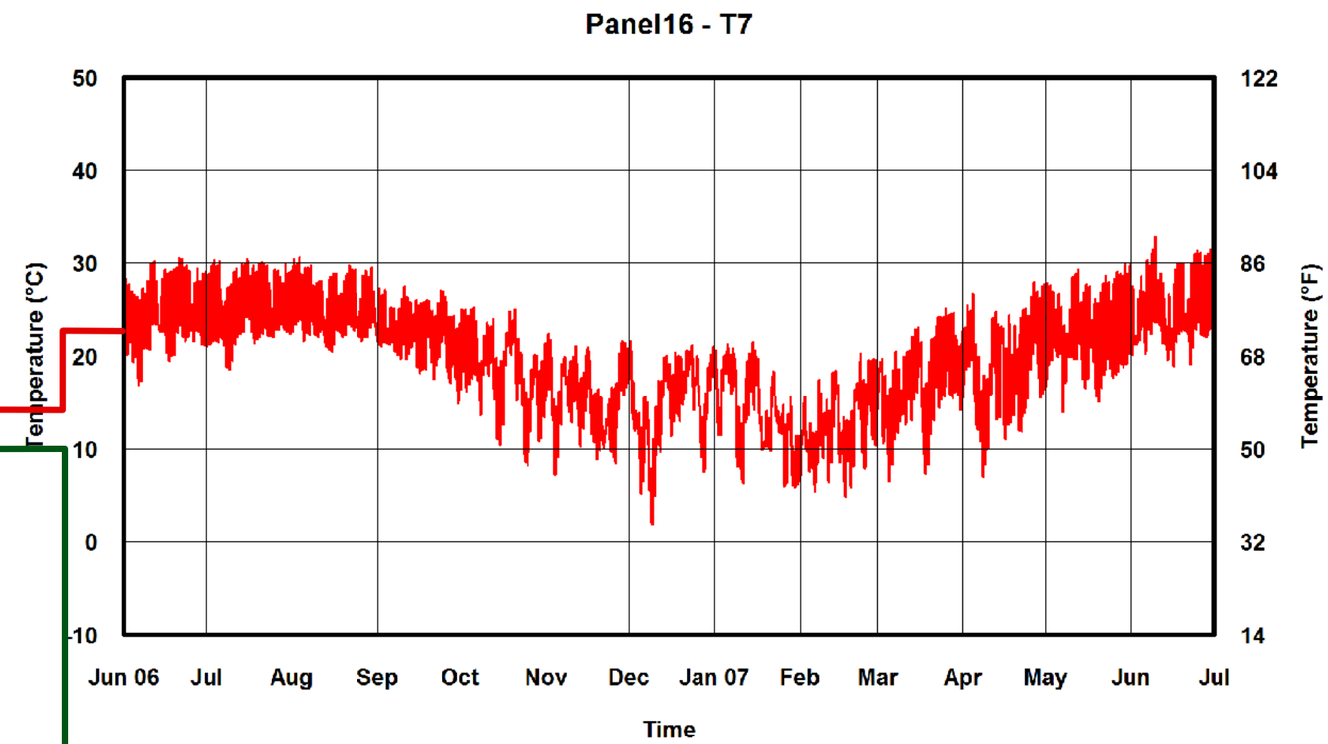
Panel16 - T7
Temperature (°C)
Temperature (°F)
50
40
30
20
10
0
-10
122
104
86
68
50
32
14
Jun 06
Jul
Aug
Sep
Oct
Nov
Dec
Jan 07
Feb
Mar
Apr
May
Jun
Jul
Time

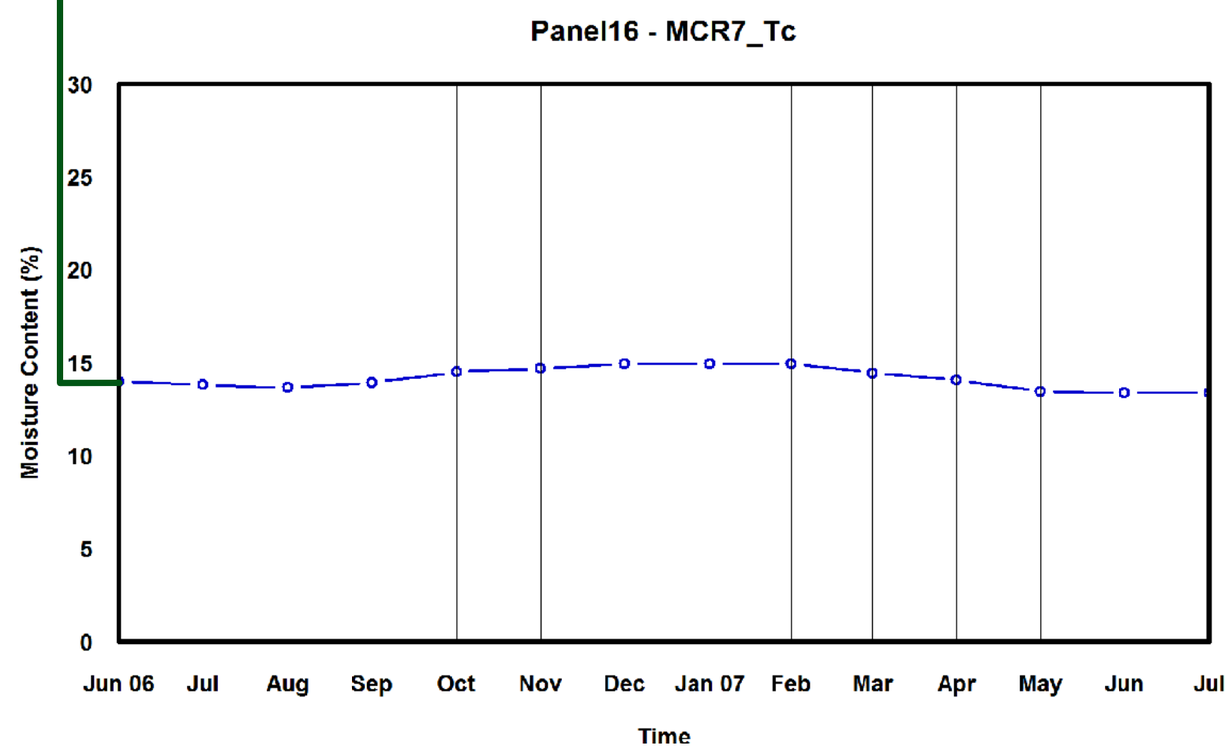
Panel16 - MCR7_Tc
Moisture Content (%)
30
25
20
15
10
5
0
Jun 06
Jul
Aug
Sep
Oct
Nov
Dec
Jan 07
Feb
Mar
Apr
May
Jun
Jul
Time

Panel 16

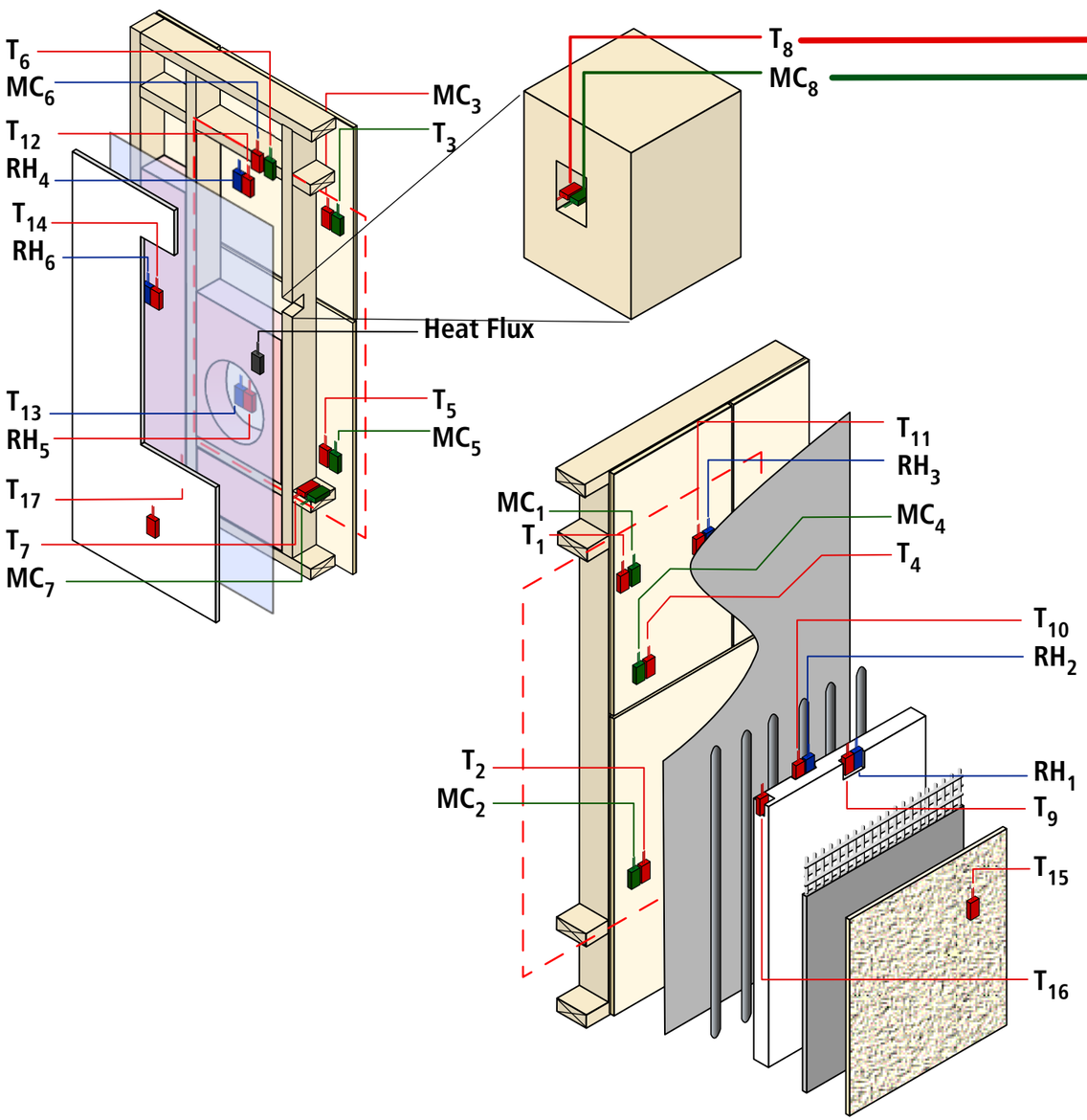
T_6
MC_6
T_{12}
RH_4
T_{14}
RH_6
T_{13}
RH_5
T_{17}
T_7
MC_7
MC_3
T_3
Heat Flux
T_5
MC_5
T_8
MC_8
T_{11}
RH_3
MC_4
T_4
MC_1
T_1
T_{10}
RH_2
T_2
MC_2
RH_1
T_9
T_{15}
T_{16}

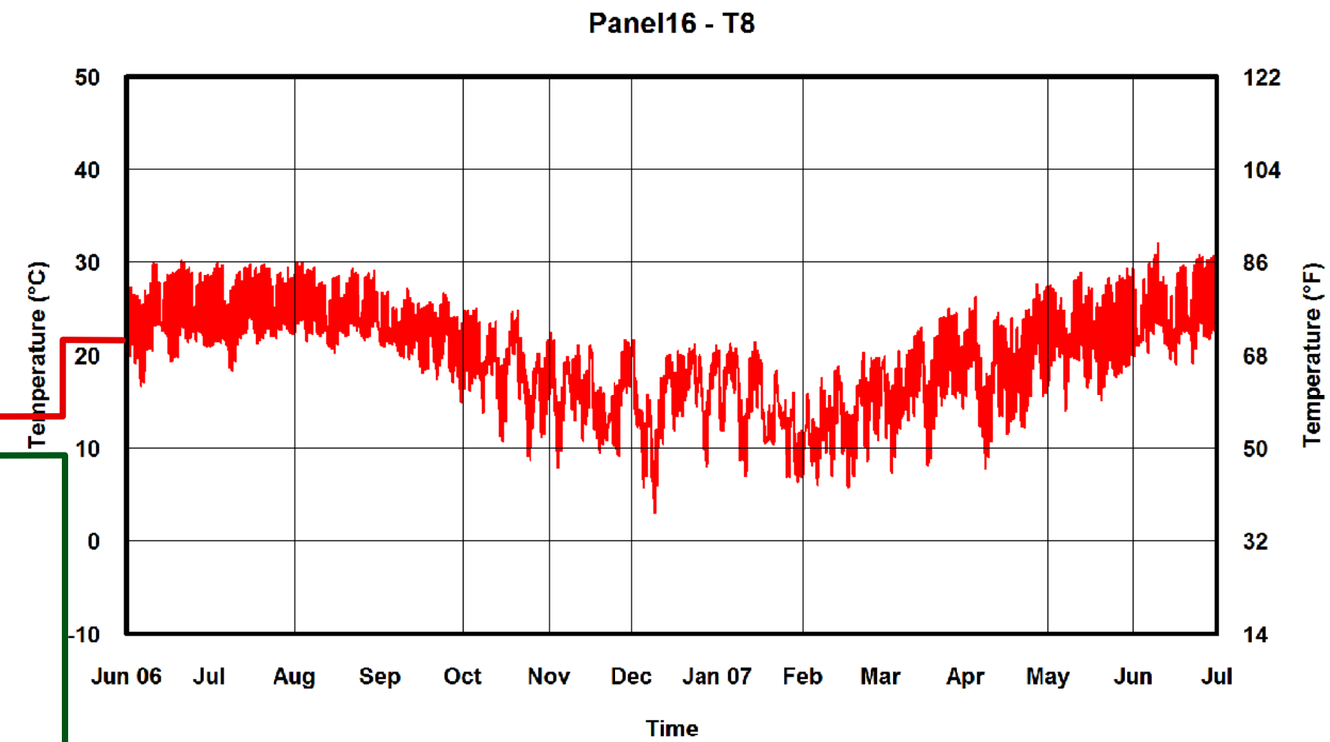
Panel16 - T8
Temperature (°C)
Temperature (°F)
50
40
30
20
10
0
-10
122
104
86
68
50
32
14
Jun 06
Jul
Aug
Sep
Oct
Nov
Dec
Jan 07
Feb
Mar
Apr
May
Jun
Jul
Time

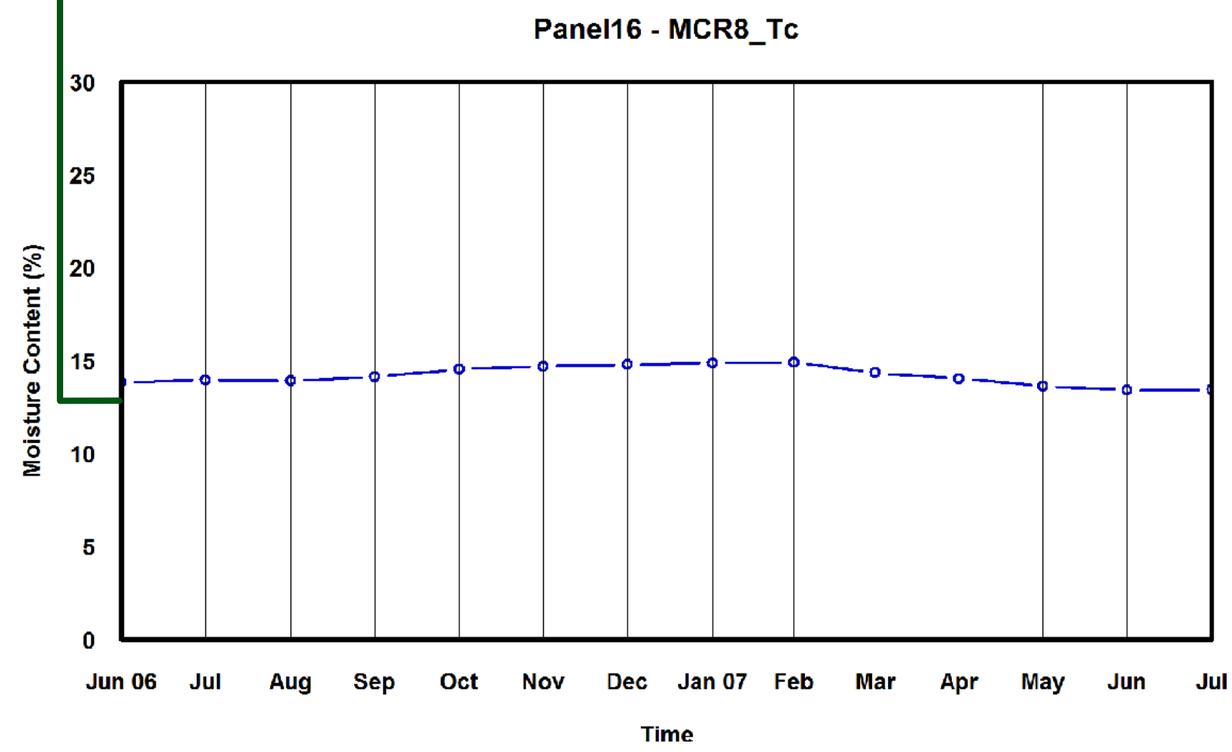
Panel16 - MCR8_Tc
Moisture Content (%)
30
25
20
15
10
5
0
Jun 06
Jul
Aug
Sep
Oct
Nov
Dec
Jan 07
Feb
Mar
Apr
May
Jun
Jul
Time

Panel 16

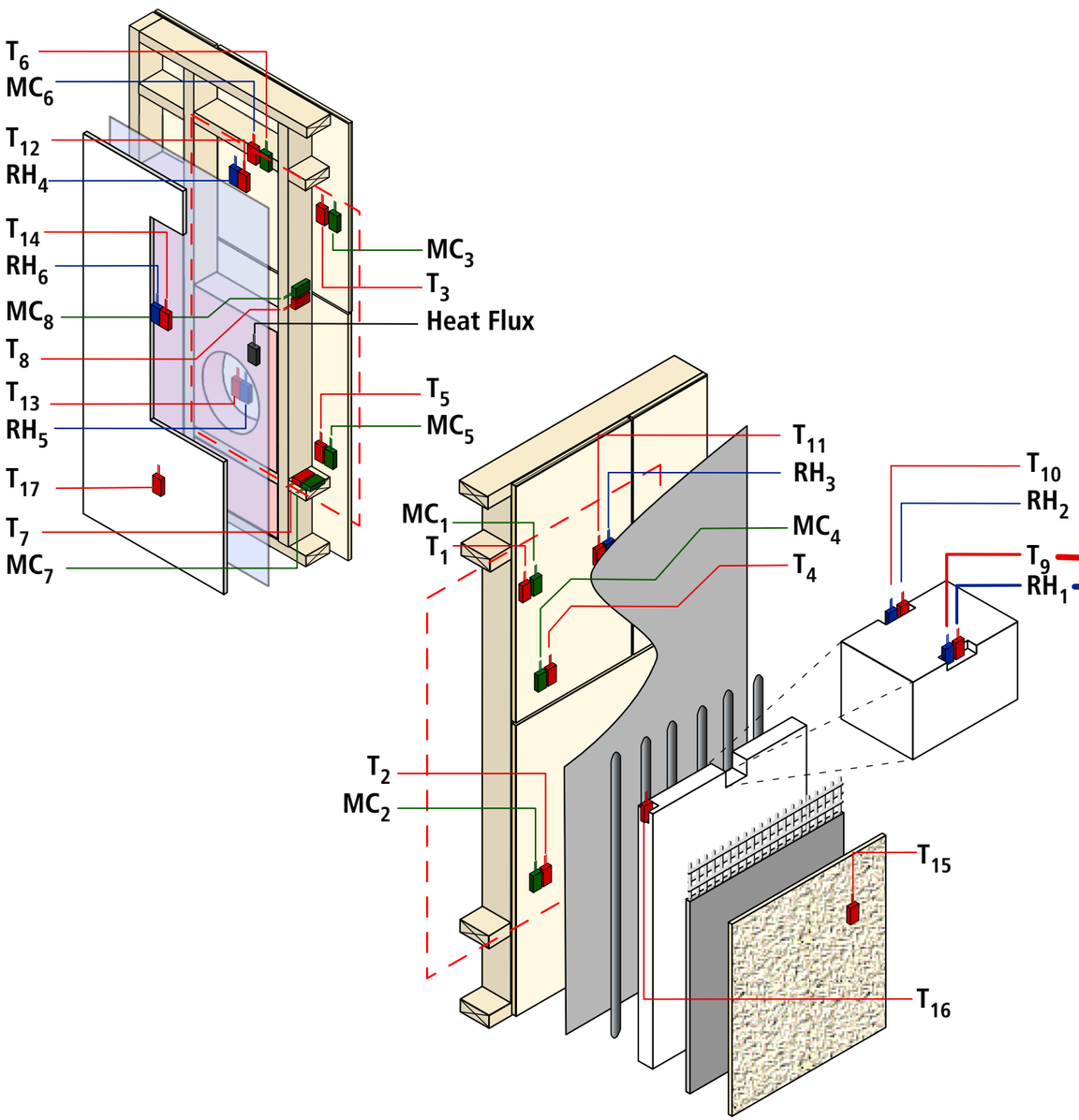
T_6
MC_6
T_{12}
RH_4
T_{14}
RH_6
MC_8
T_8
T_{13}
RH_5
T_{17}
T_7
MC_7
MC_3
T_3
Heat Flux
T_5
MC_5
T_{11}
RH_3
MC_1
T_1
MC_4
T_4
T_{10}
RH_2
T_9
RH_1
T_2
MC_2
T_{15}
T_{16}

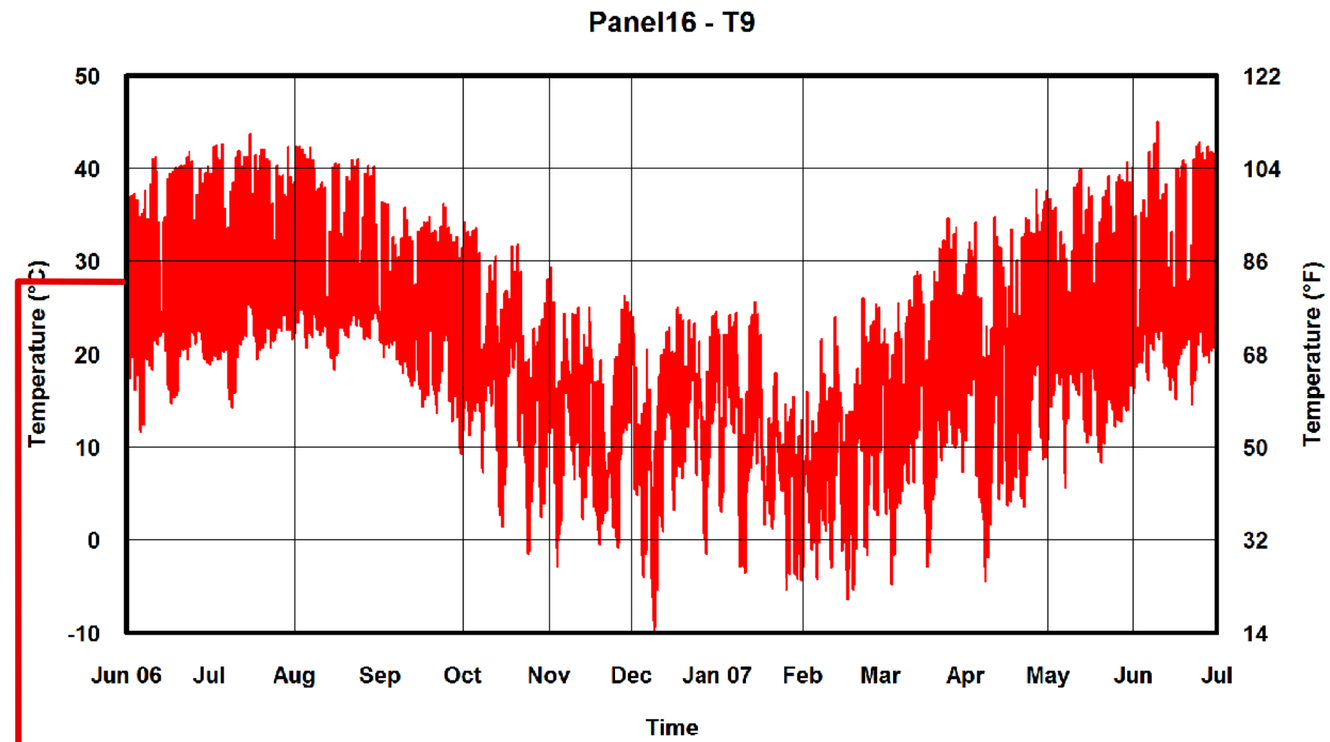
Panel16 - T9
Temperature (°C)
Temperature (°F)
50
40
30
20
10
0
-10
122
104
86
68
50
32
14
Jun 06
Jul
Aug
Sep
Oct
Nov
Dec
Jan 07
Feb
Mar
Apr
May
Jun
Jul
Time

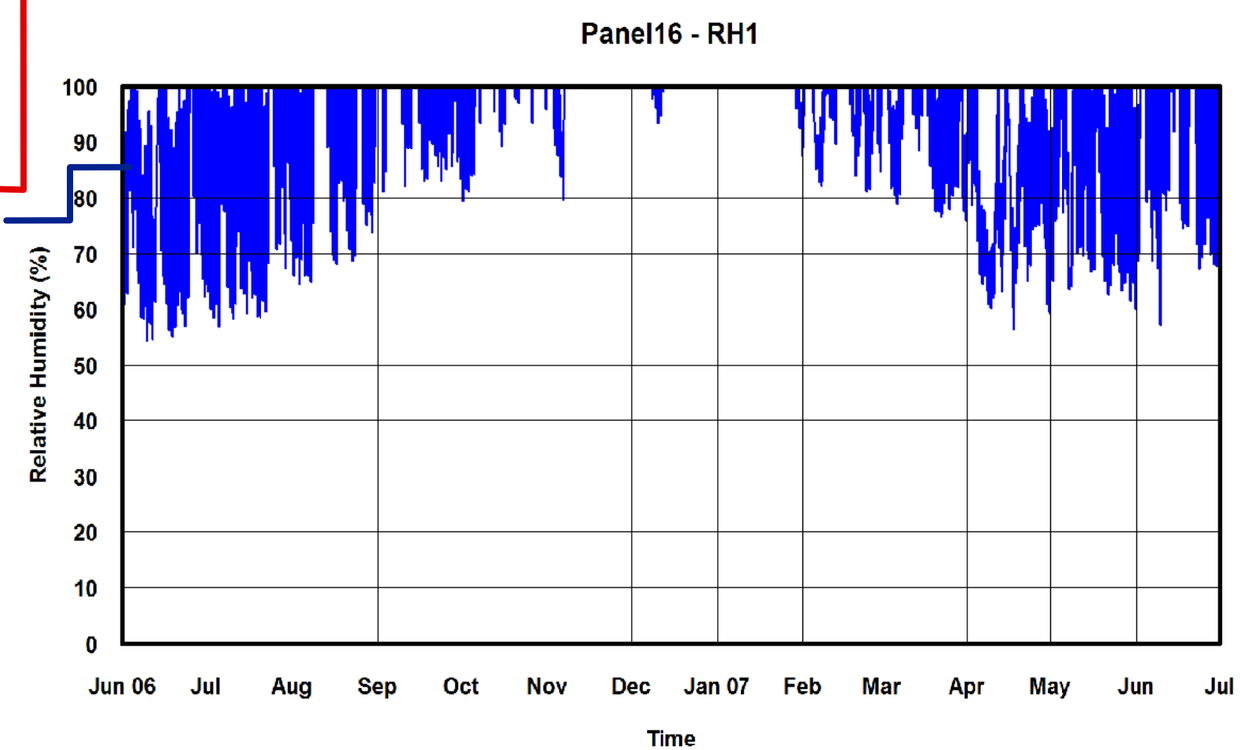
Panel16 - RH1
Relative Humidity (%)
100
90
80
70
60
50
40
30
20
10
0
Jun 06
Jul
Aug
Sep
Oct
Nov
Dec
Jan 07
Feb
Mar
Apr
May
Jun
Jul
Time

Panel 16

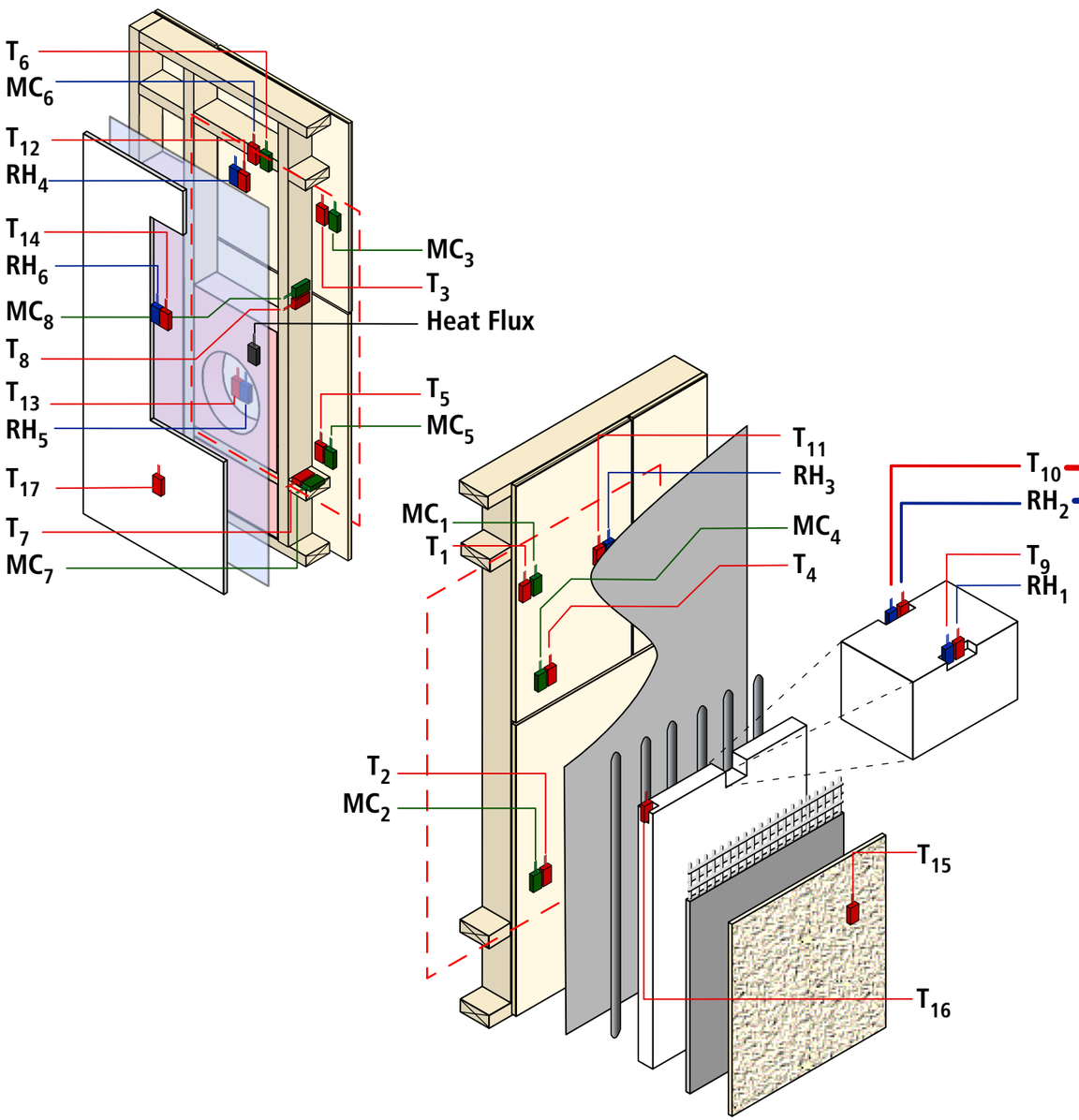
T_6
MC_6
T_{12}
RH_4
T_{14}
RH_6
MC_8
T_8
T_{13}
RH_5
T_{17}
T_7
MC_7
MC_3
T_3
Heat Flux
T_5
MC_5
T_{11}
RH_3
MC_1
T_1
MC_4
T_4
T_{10}
RH_2
T_9
RH_1
T_2
MC_2
T_{15}
T_{16}

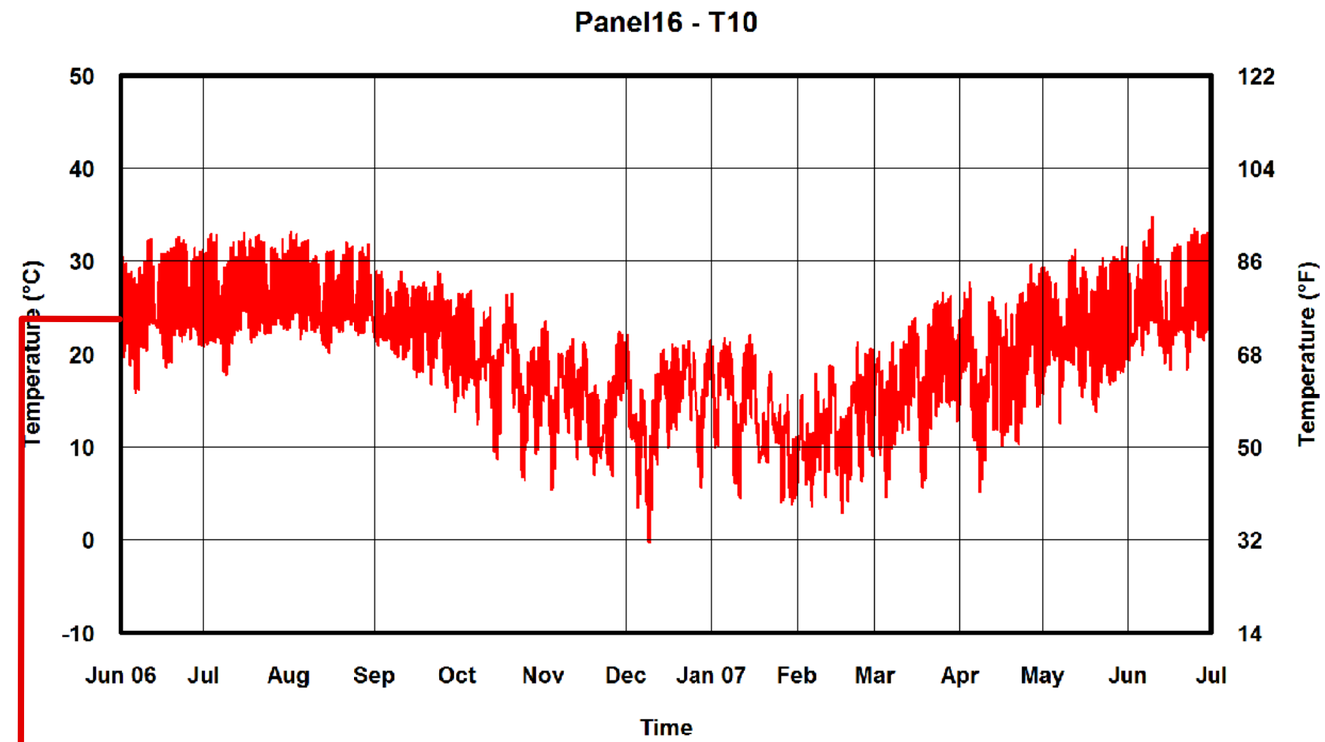
Panel16 - T10
Temperature (°C)
Temperature (°F)
50
40
30
20
10
0
-10
122
104
86
68
50
32
14
Jun 06
Jul
Aug
Sep
Oct
Nov
Dec
Jan 07
Feb
Mar
Apr
May
Jun
Jul
Time

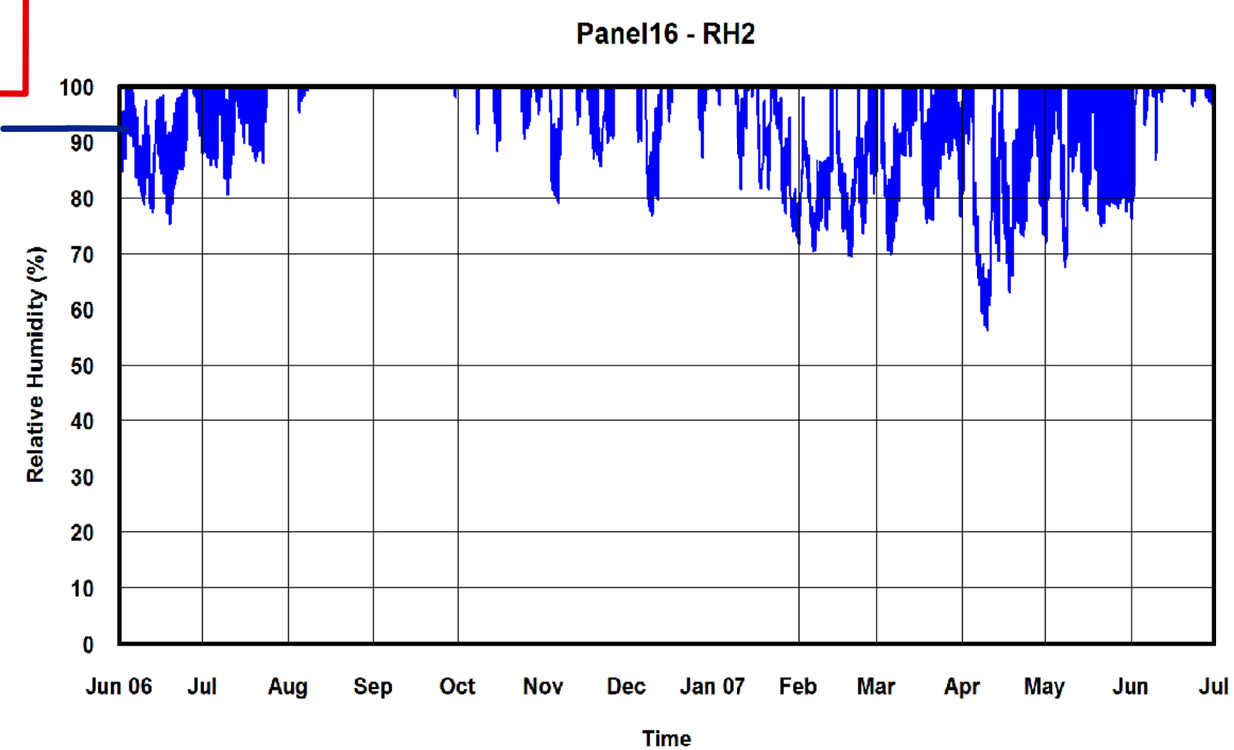
Panel16 - RH2
Relative Humidity (%)
100
90
80
70
60
50
40
30
20
10
0
Jun 06
Jul
Aug
Sep
Oct
Nov
Dec
Jan 07
Feb
Mar
Apr
May
Jun
Jul
Time

Panel 16

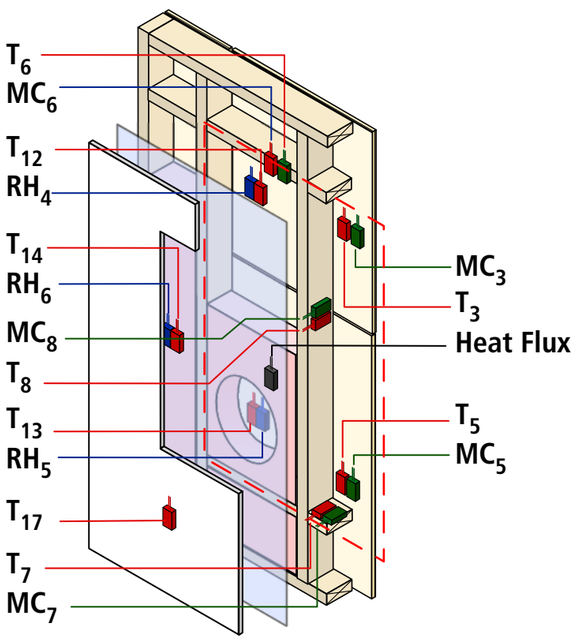
T_6
MC_6
T_{12}
RH_4
T_{14}
RH_6
MC_8
T_8
T_{13}
RH_5
T_{17}
T_7
MC_7
MC_3
T_3
Heat Flux
T_5
MC_5

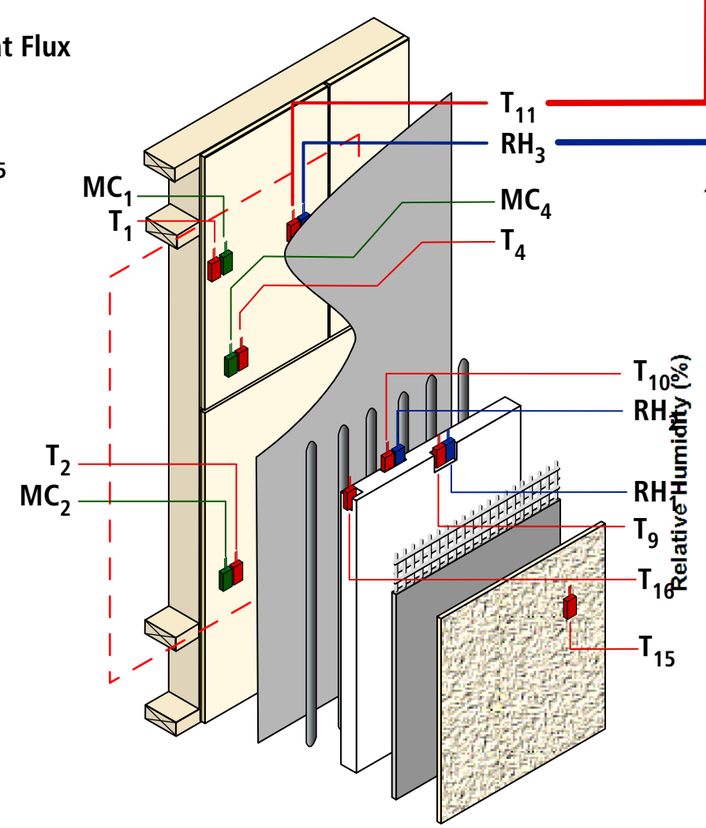
T_{11}
RH_3
MC_1
T_1
MC_4
T_4
T_{10}
RH_1
T_2
MC_2
RH_2
T_9
T_{16}
T_{15}

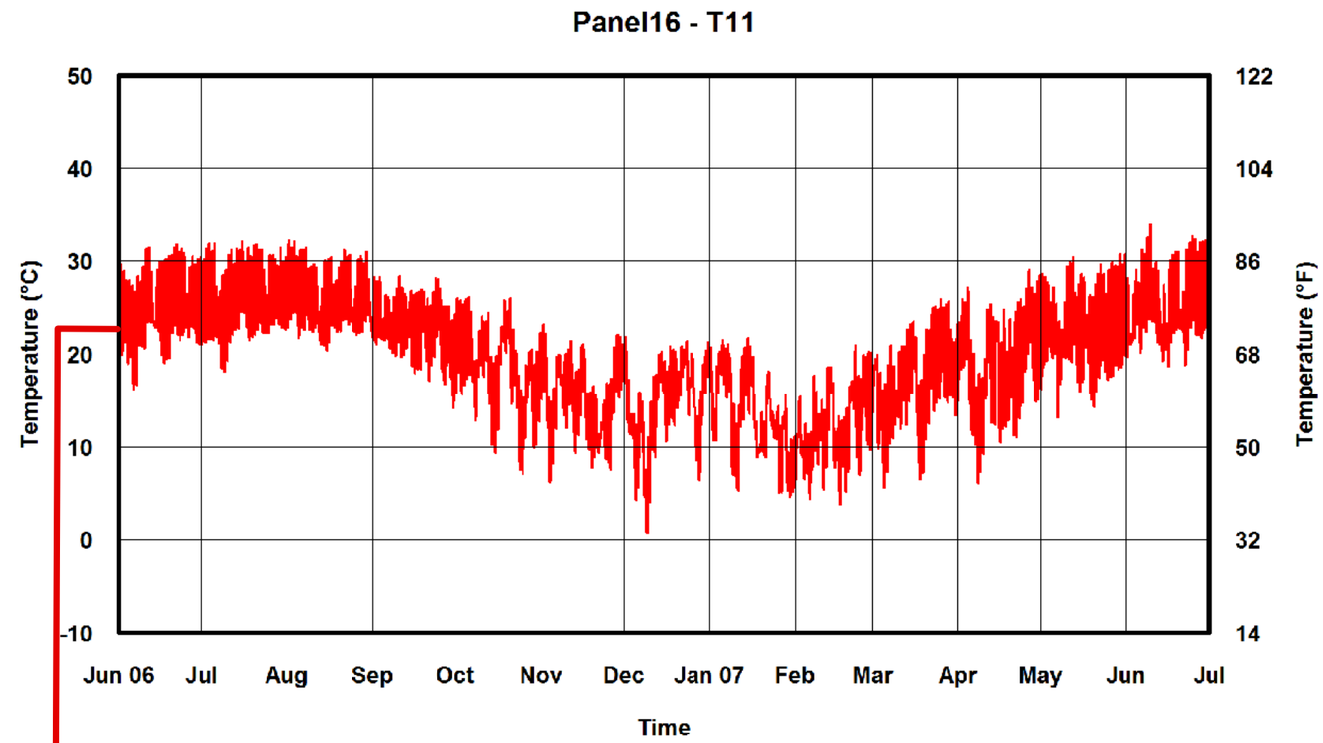
Panel16 - T11
Temperature (°C)
Temperature (°F)
50
40
30
20
10
0
-10
122
104
86
68
50
32
14
Jun 06
Jul
Aug
Sep
Oct
Nov
Dec
Jan 07
Feb
Mar
Apr
May
Jun
Jul
Time

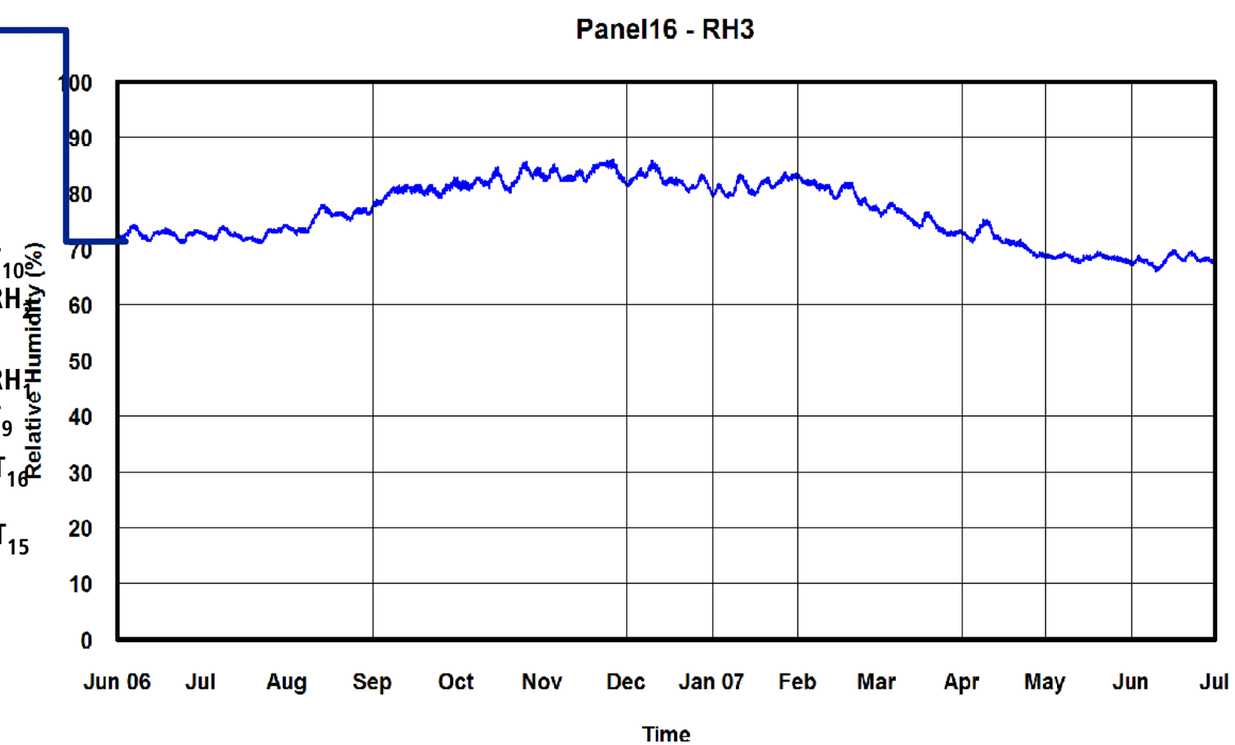
Panel16 - RH3
Relative Humidity (%)
100
90
80
70
60
50
40
30
20
10
0
Jun 06
Jul
Aug
Sep
Oct
Nov
Dec
Jan 07
Feb
Mar
Apr
May
Jun
Jul
Time

Panel 16

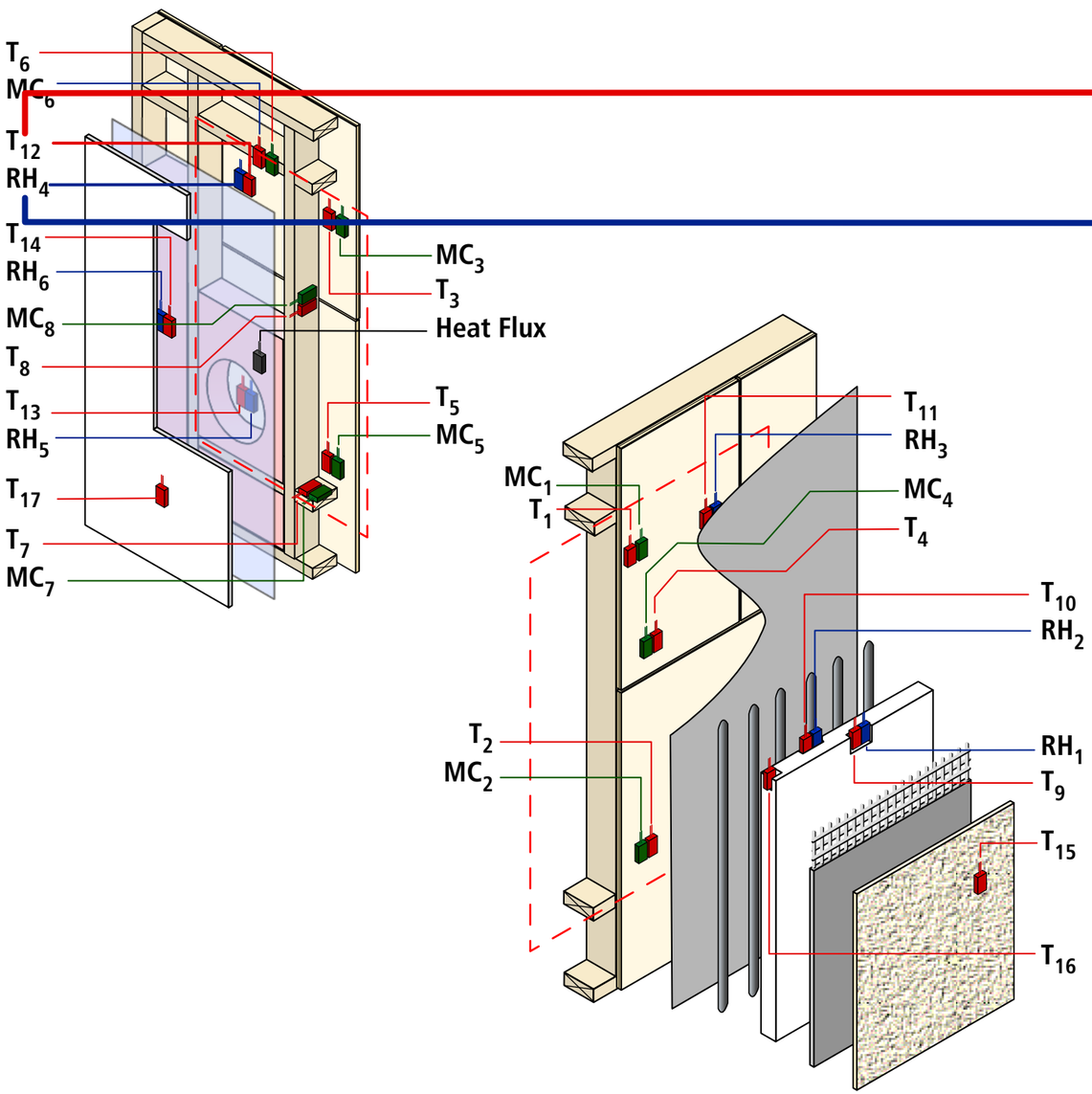
T_6
MC_6
T_{12}
RH_4
T_{14}
RH_6
MC_8
T_8
T_{13}
RH_5
T_{17}
T_7
MC_7
MC_3
T_3
Heat Flux
T_5
MC_5
MC_1
T_1
T_2
MC_2
T_{11}
RH_3
MC_4
T_4
T_{10}
RH_2
RH_1
T_9
T_{15}
T_{16}

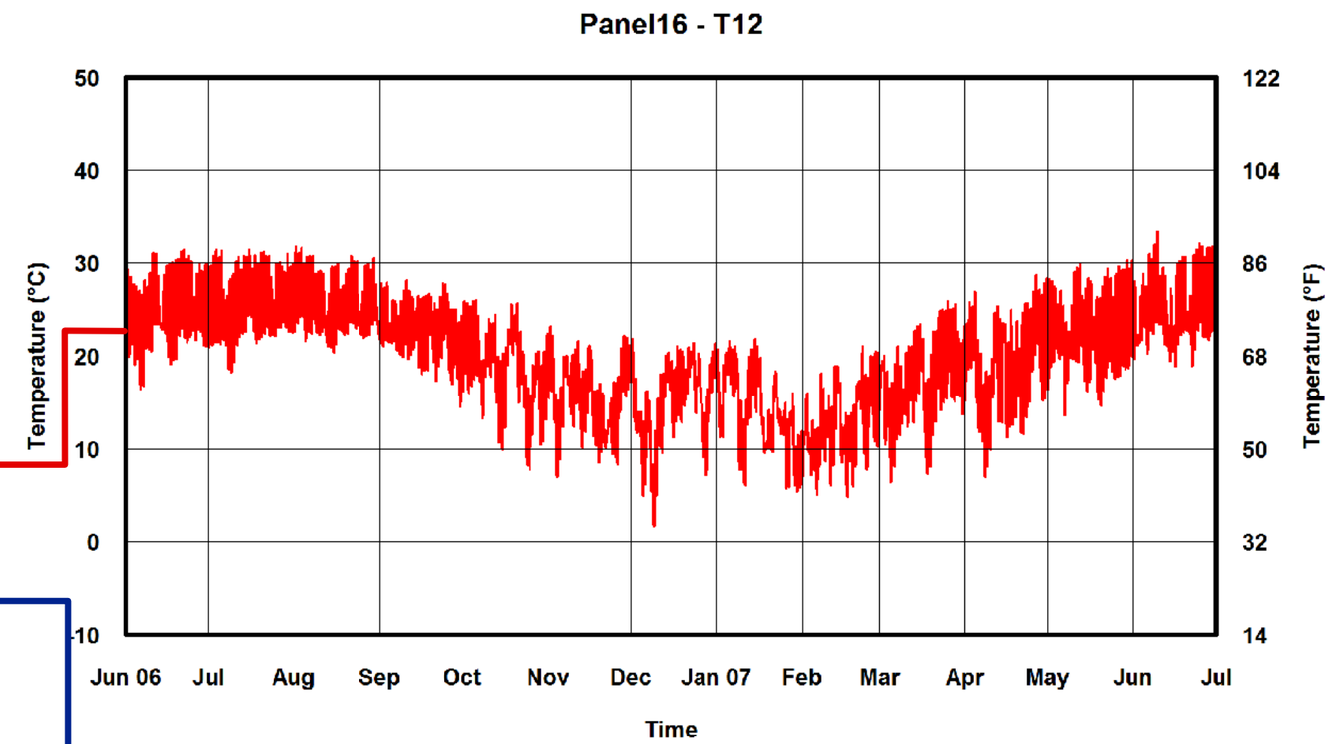
Panel16 - T12
Temperature (°C)
50
40
30
20
10
0
-10
Temperature (°F)
122
104
86
68
50
32
14
Jun 06
Jul
Aug
Sep
Oct
Nov
Dec
Jan 07
Feb
Mar
Apr
May
Jun
Jul
Time

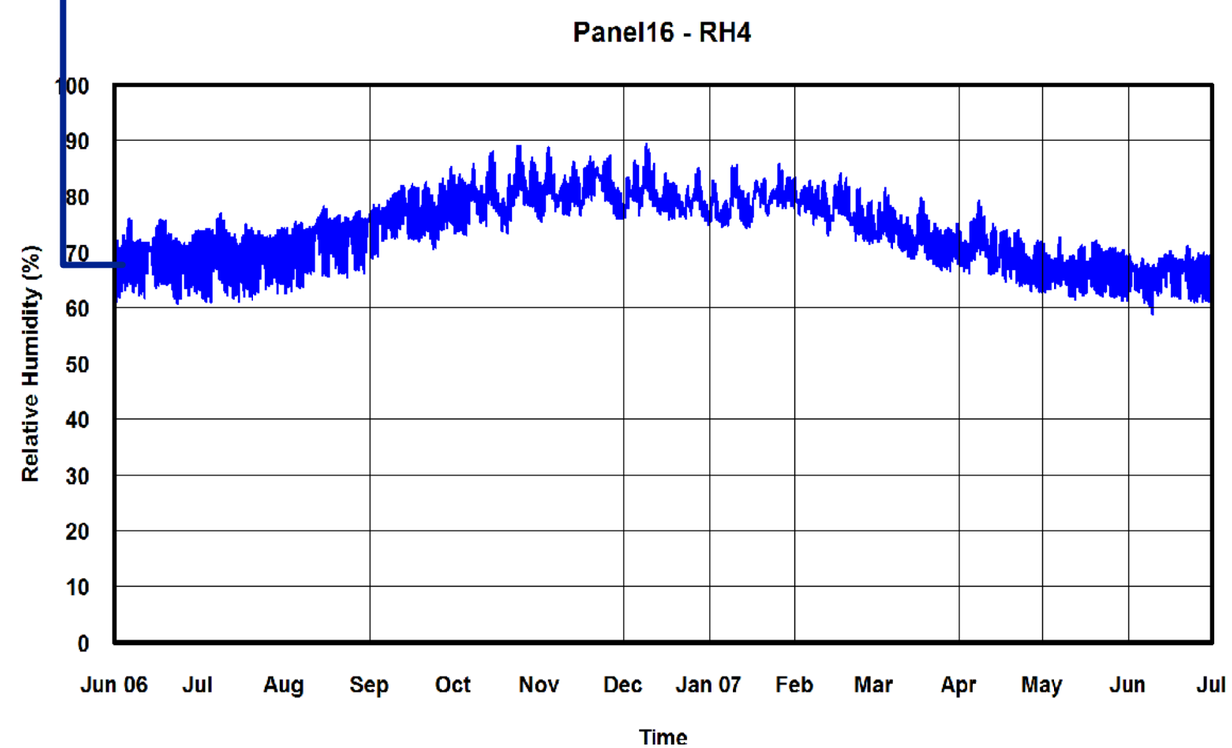
Panel16 - RH4
Relative Humidity (%)
100
90
80
70
60
50
40
30
20
10
0
Jun 06
Jul
Aug
Sep
Oct
Nov
Dec
Jan 07
Feb
Mar
Apr
May
Jun
Jul
Time

Panel 16

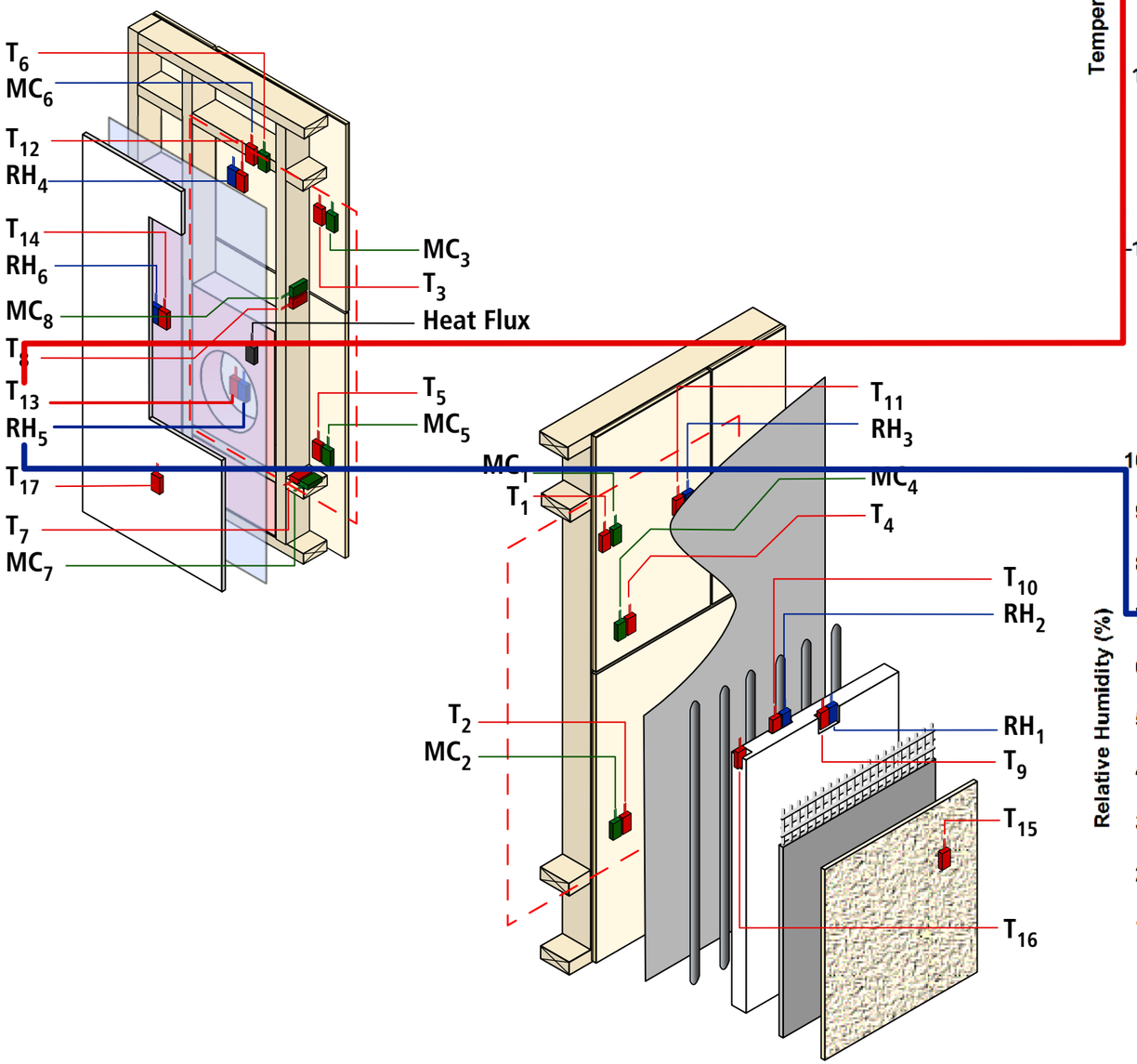
T_6
MC_6
T_{12}
RH_4
T_{14}
RH_6
MC_8
T_8
T_{13}
RH_5
T_{17}
T_7
MC_7
MC_3
T_3
Heat Flux
T_5
MC_5
MC_1
T_1
T_{11}
RH_3
MC_4
T_4
T_{10}
RH_2
T_2
MC_2
RH_1
T_9
T_{15}
T_{16}

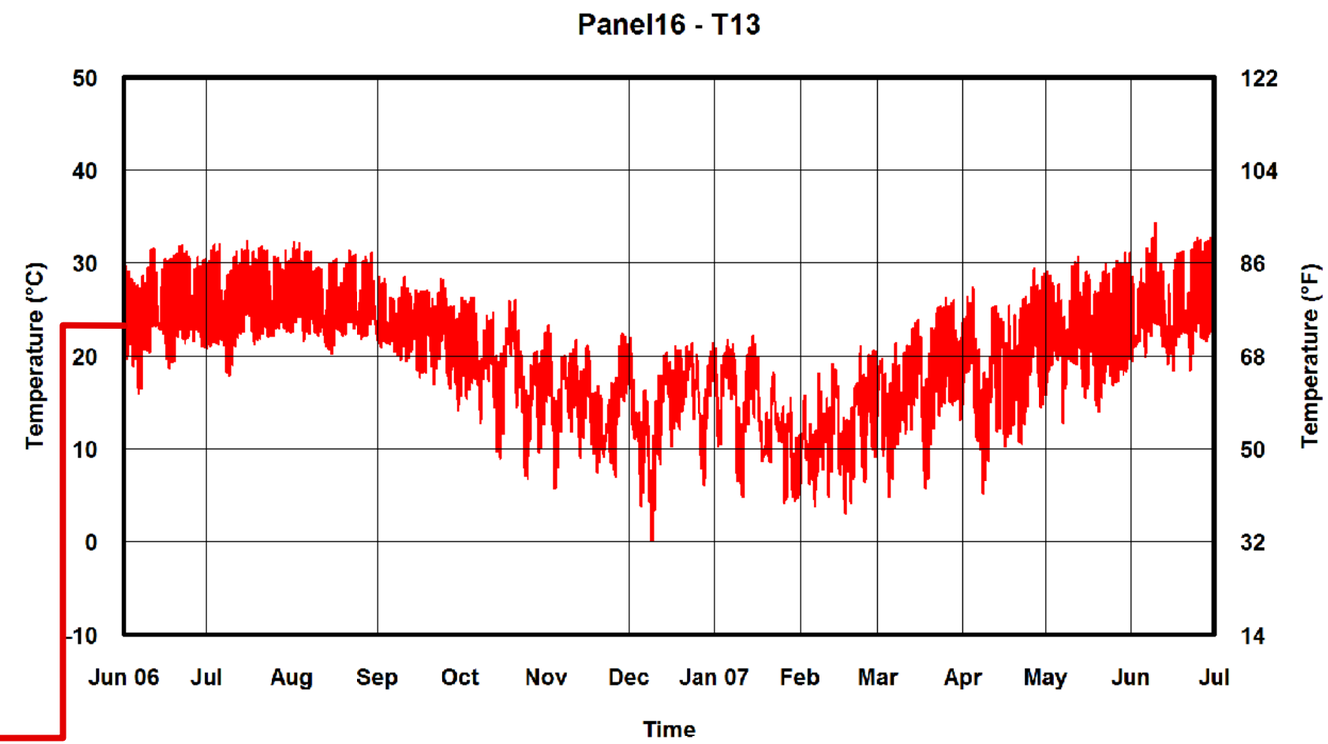
Panel16 - T13
Temperature (°C)
Temperature (°F)
50
40
30
20
10
0
-10
122
104
86
68
50
32
14
Jun 06
Jul
Aug
Sep
Oct
Nov
Dec
Jan 07
Feb
Mar
Apr
May
Jun
Jul
Time

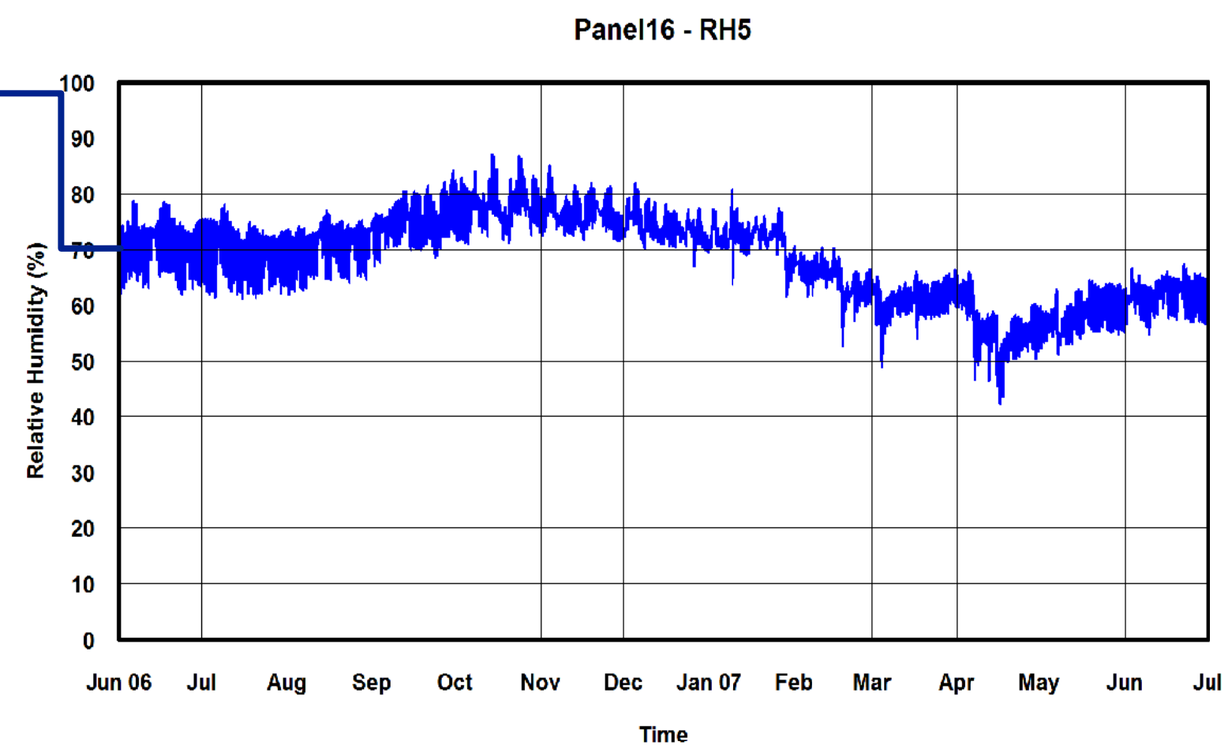
Panel16 - RH5
Relative Humidity (%)
100
90
80
70
60
50
40
30
20
10
0
Jun 06
Jul
Aug
Sep
Oct
Nov
Dec
Jan 07
Feb
Mar
Apr
May
Jun
Jul
Time

Panel 16

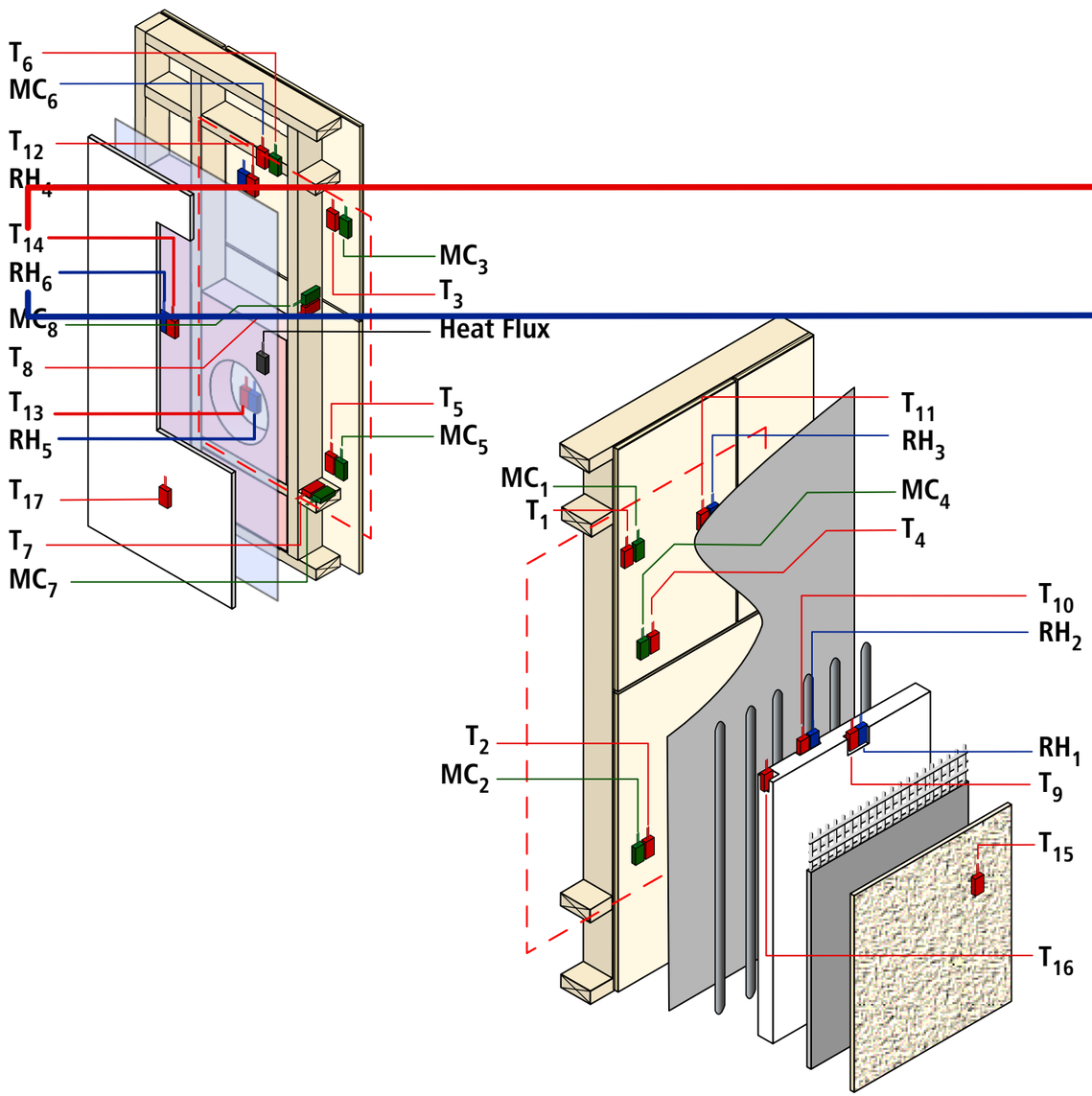
T_6
MC_6
T_{12}
RH_4
T_{14}
RH_6
MC_8
T_8
T_{13}
RH_5
T_{17}
T_7
MC_7
MC_3
T_3
Heat Flux
T_5
MC_5
MC_1
T_1
T_2
MC_2
T_{11}
RH_3
MC_4
T_4
T_{10}
RH_2
RH_1
T_9
T_{15}
T_{16}

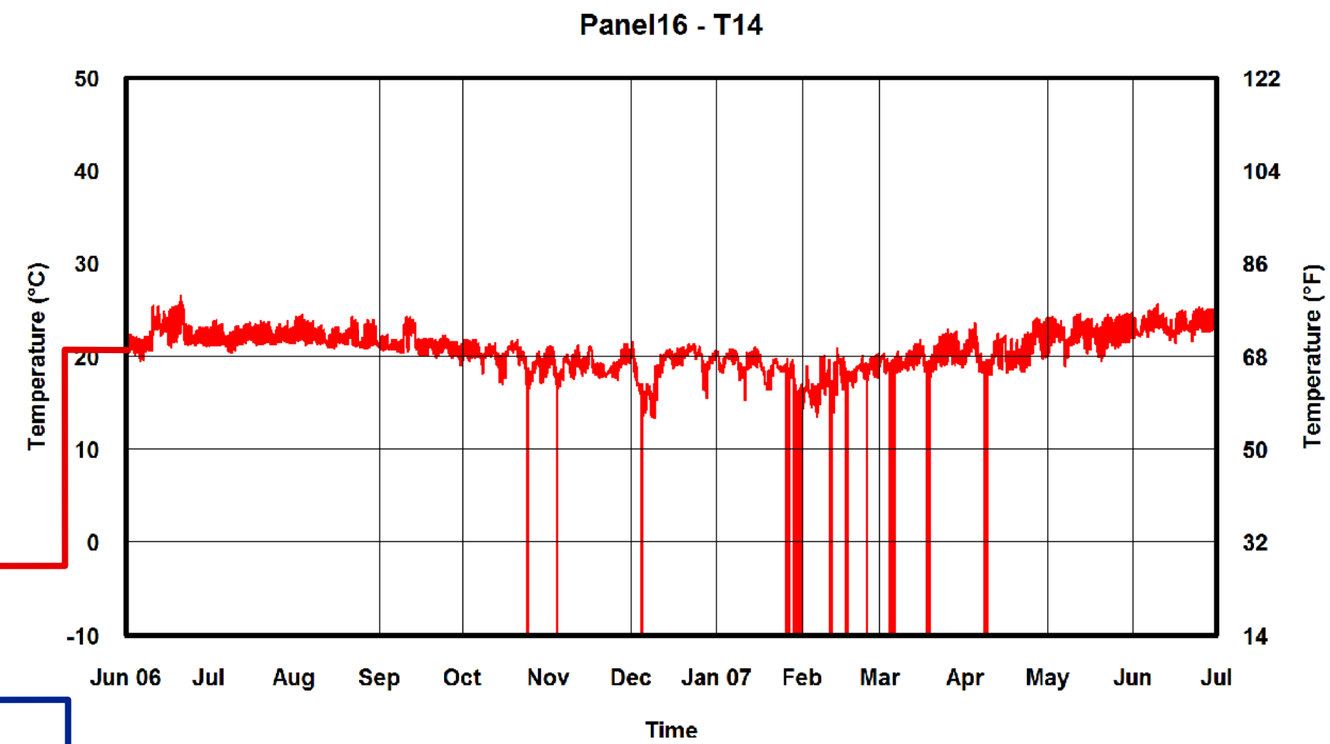
Panel16 - T14
Temperature (°C)
Temperature (°F)
50
40
30
20
10
0
-10
122
104
86
68
50
32
14
Jun 06
Jul
Aug
Sep
Oct
Nov
Dec
Jan 07
Feb
Mar
Apr
May
Jun
Jul
Time

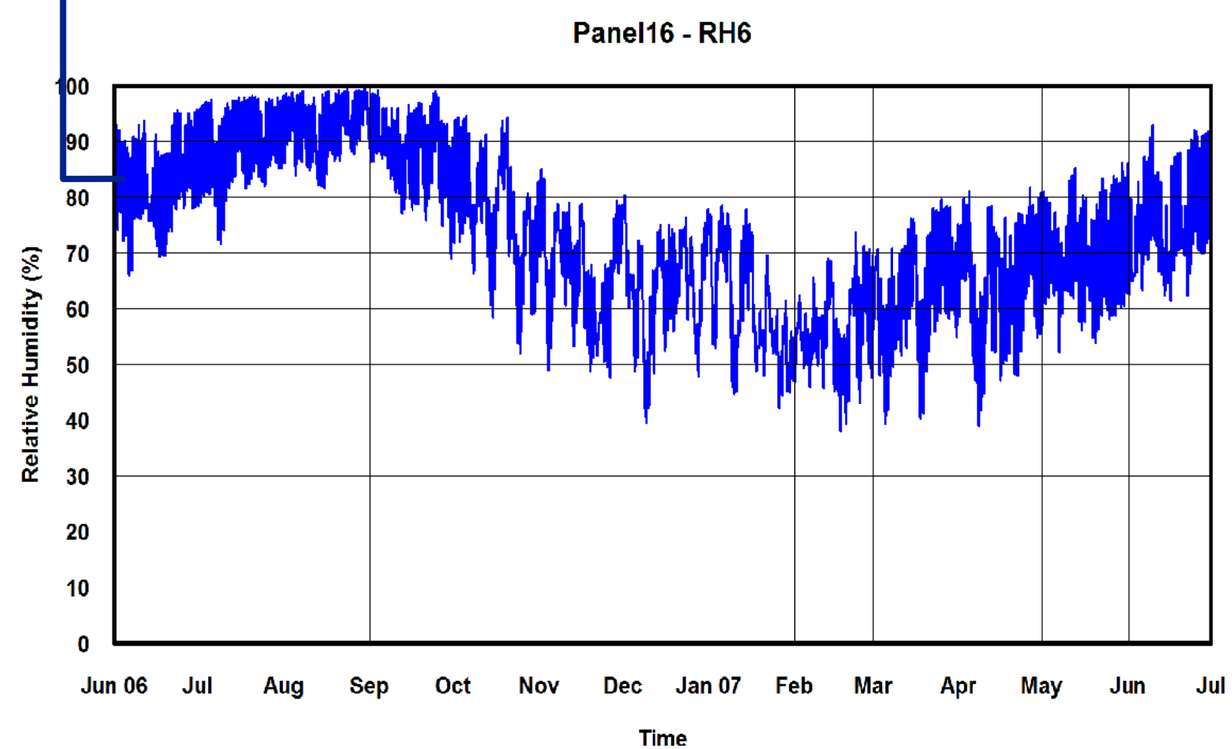
Panel16 - RH6
Relative Humidity (%)
100
90
80
70
60
50
40
30
20
10
0
Jun 06
Jul
Aug
Sep
Oct
Nov
Dec
Jan 07
Feb
Mar
Apr
May
Jun
Jul
Time

Panel 16

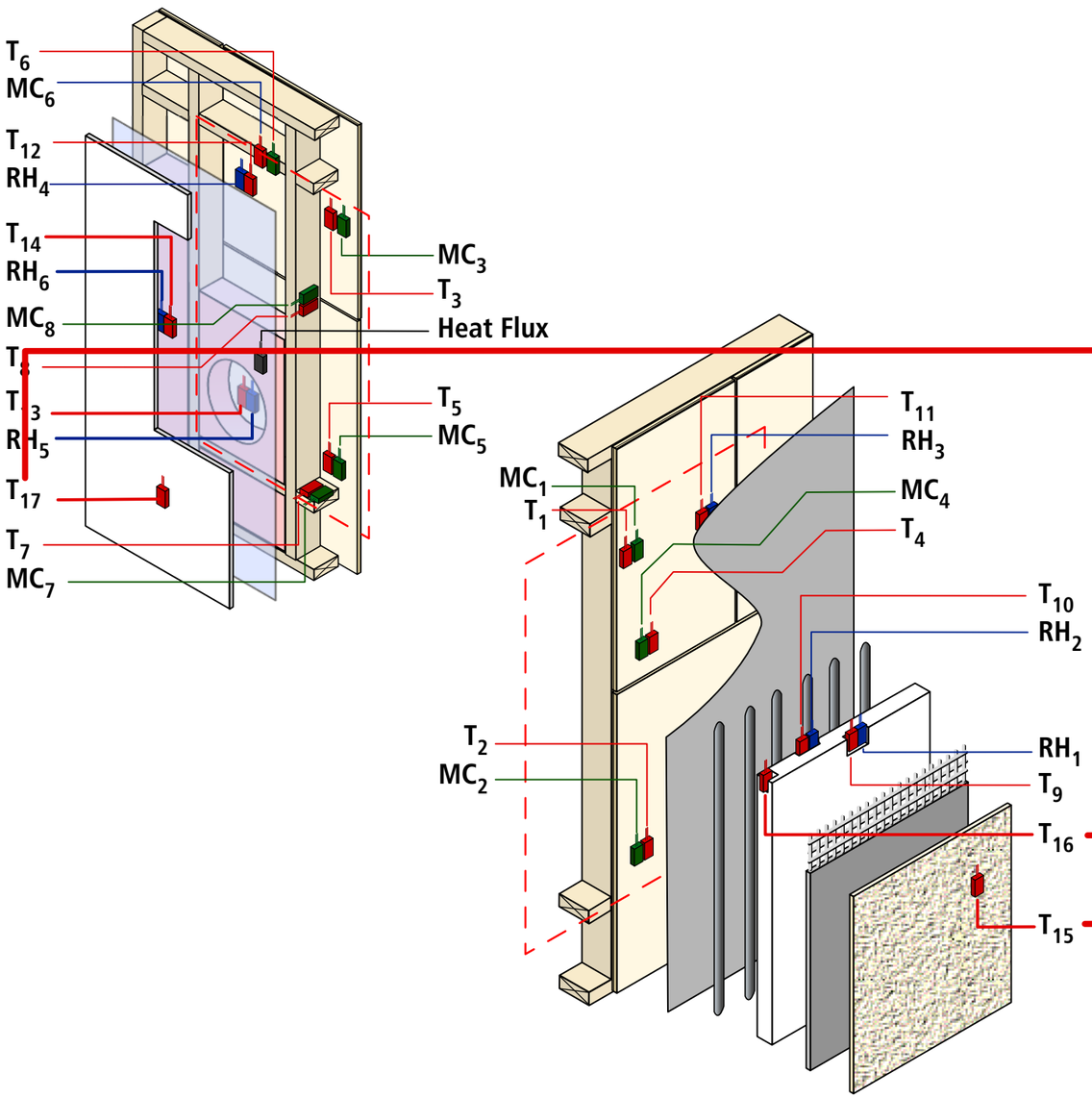
T_6
MC_6
T_{12}
RH_4
T_{14}
RH_6
MC_8
T_8
T_3
RH_5
T_{17}
T_7
MC_7
MC_3
T_3
Heat Flux
T_5
MC_5
MC_1
T_1
T_2
MC_2
T_{11}
RH_3
MC_4
T_4
T_{10}
RH_2
RH_1
T_9
T_{16}
T_{15}

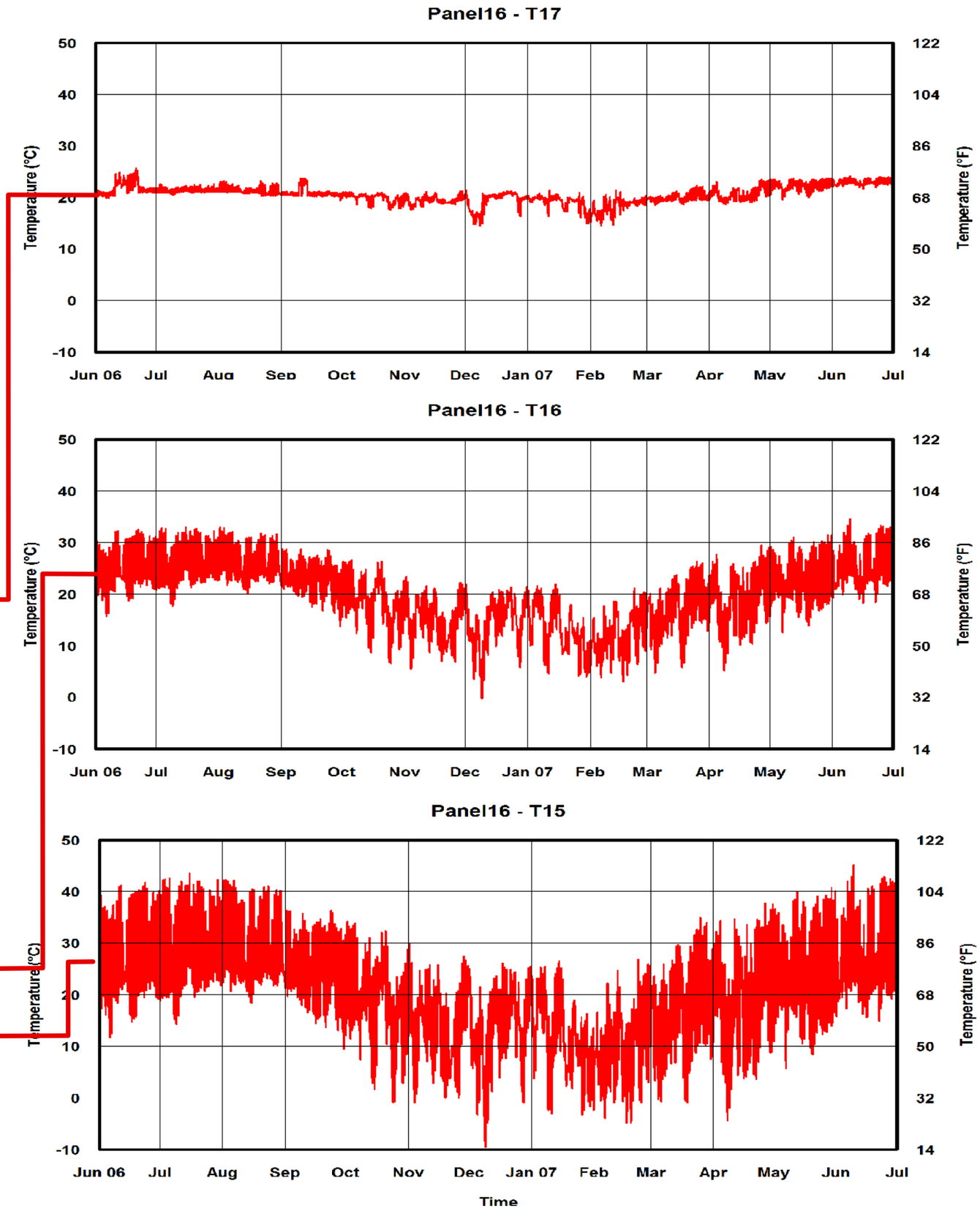
Panel16 - T17
Panel16 - T16
Panel16 - T15
Temperature (°C)
Temperature (°F)
50
40
30
20
10
0
-10
122
104
86
68
50
32
14
Jun 06
Jul
Aug
Sep
Oct
Nov
Dec
Jan 07
Feb
Mar
Apr
May
Jun
Jul
Time

Panel 17

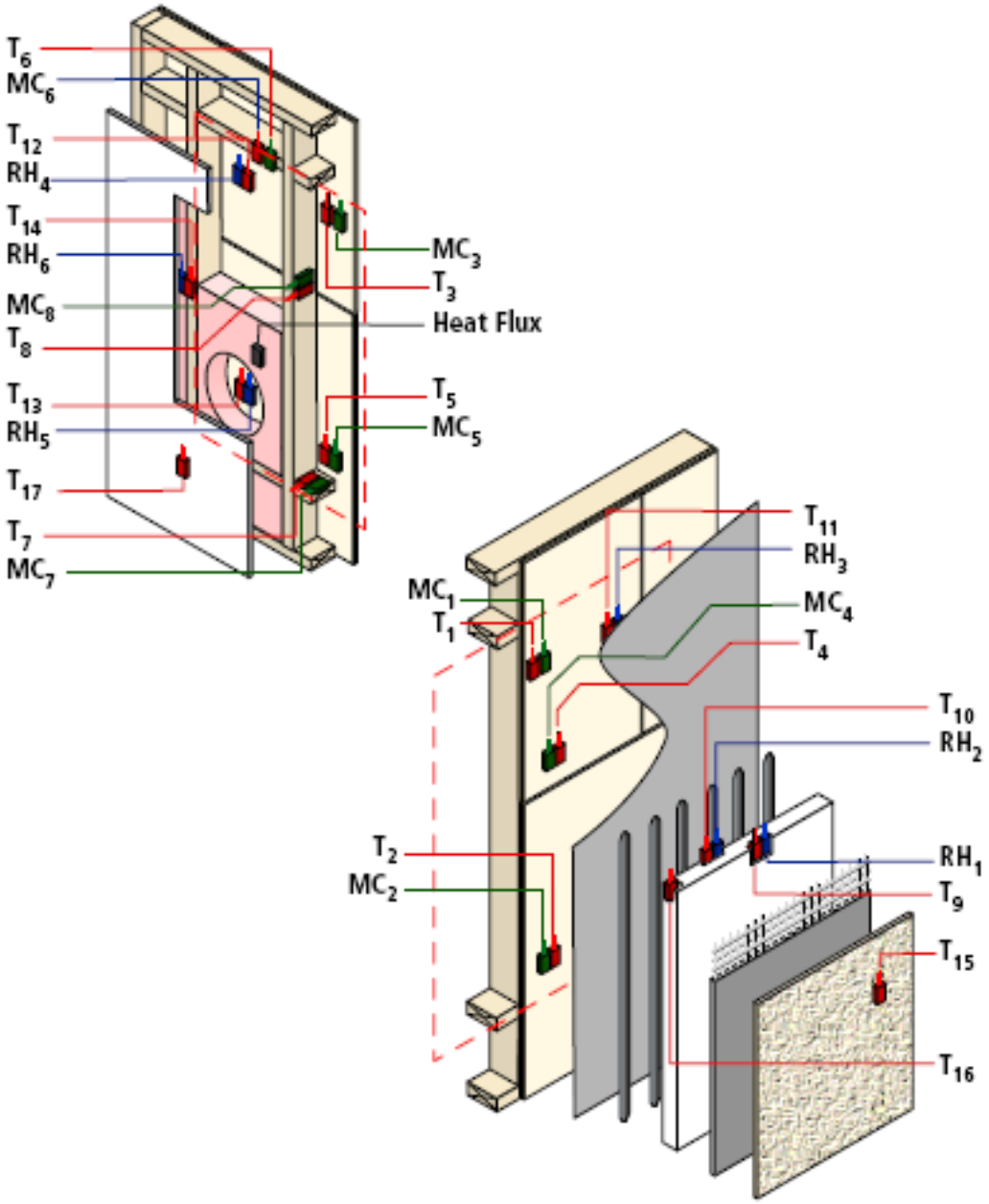
T_6
MC_6
T_{12}
RH_4
T_{14}
RH_6
MC_8
T_8
T_{13}
RH_5
T_{17}
T_7
MC_7
MC_3
T_3
Heat Flux
T_5
MC_5
T_{11}
RH_3
MC_1
T_1
MC_4
T_4
T_{10}
RH_2
T_2
MC_2
RH_1
T_9
T_{15}
T_{16}

Panel 17

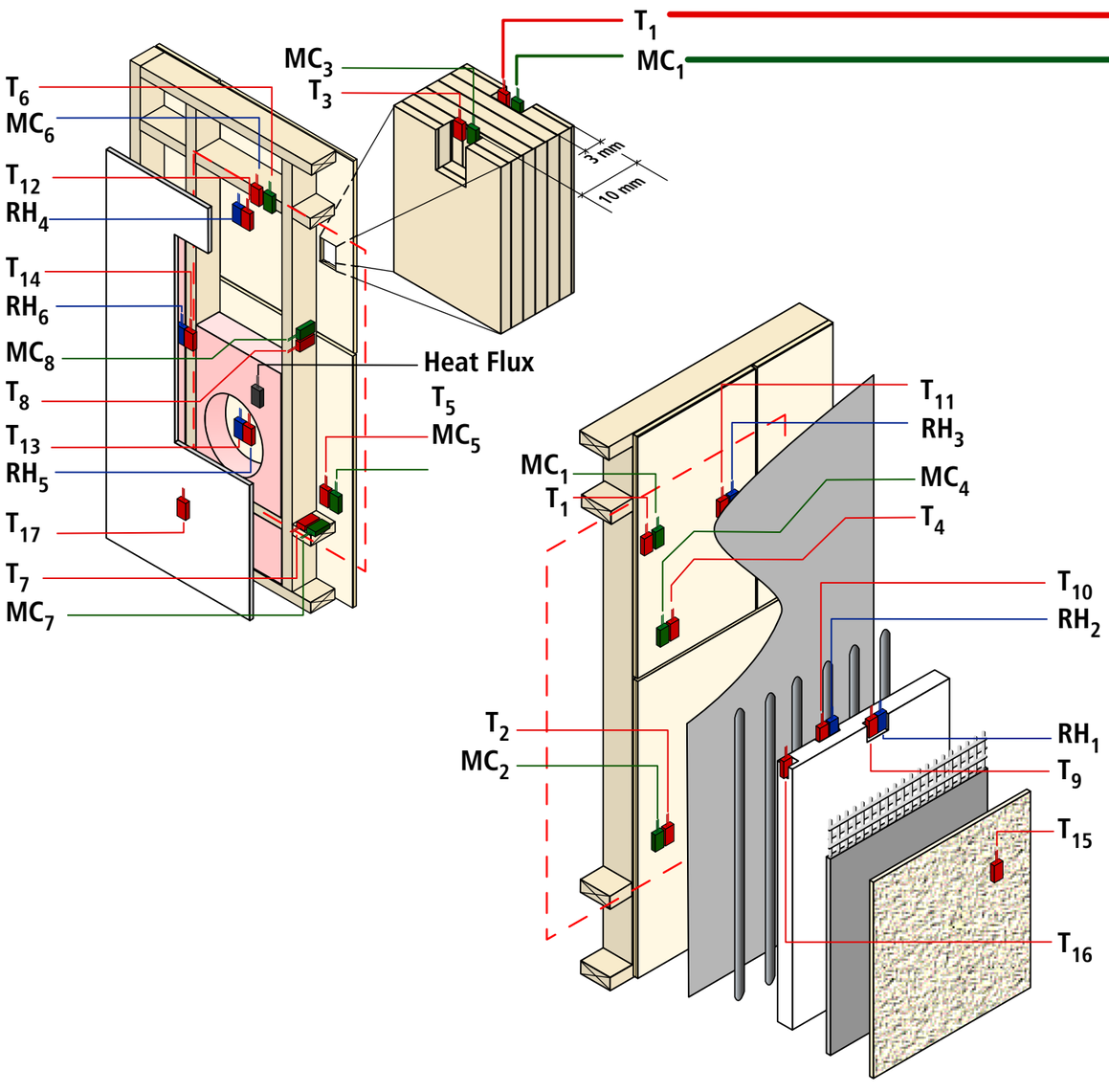
T_1
MC_1
MC_3
T_3
T_6
MC_6
T_{12}
RH_4
T_{14}
RH_6
MC_8
T_8
T_{13}
RH_5
T_{17}
T_7
MC_7
3 mm
10 mm
Heat Flux
T_5
MC_5
T_{11}
RH_3
MC_4
T_4
T_{10}
RH_2
RH_1
T_9
T_{15}
T_{16}
T_2
MC_2

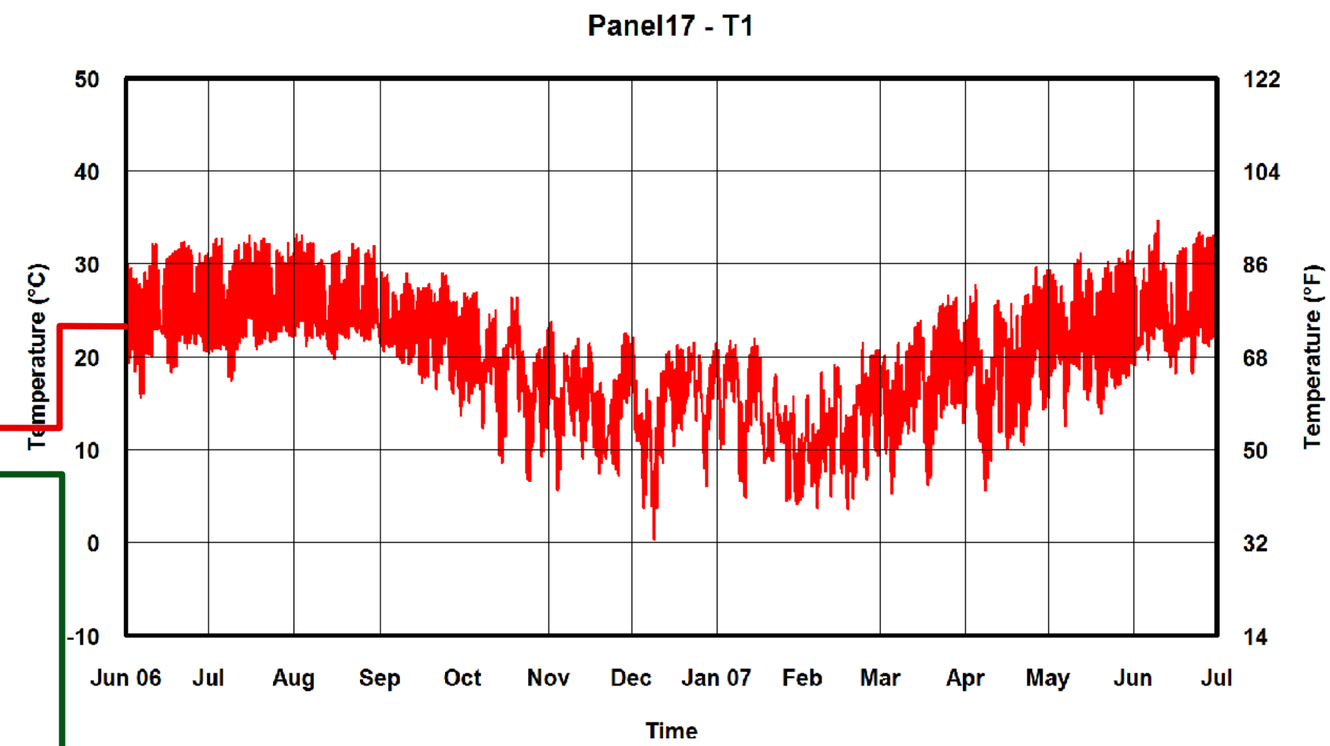
Panel17 - T1
Temperature (°C)
Temperature (°F)
50
40
30
20
10
0
-10
122
104
86
68
50
32
14
Jun 06
Jul
Aug
Sep
Oct
Nov
Dec
Jan 07
Feb
Mar
Apr
May
Jun
Jul
Time

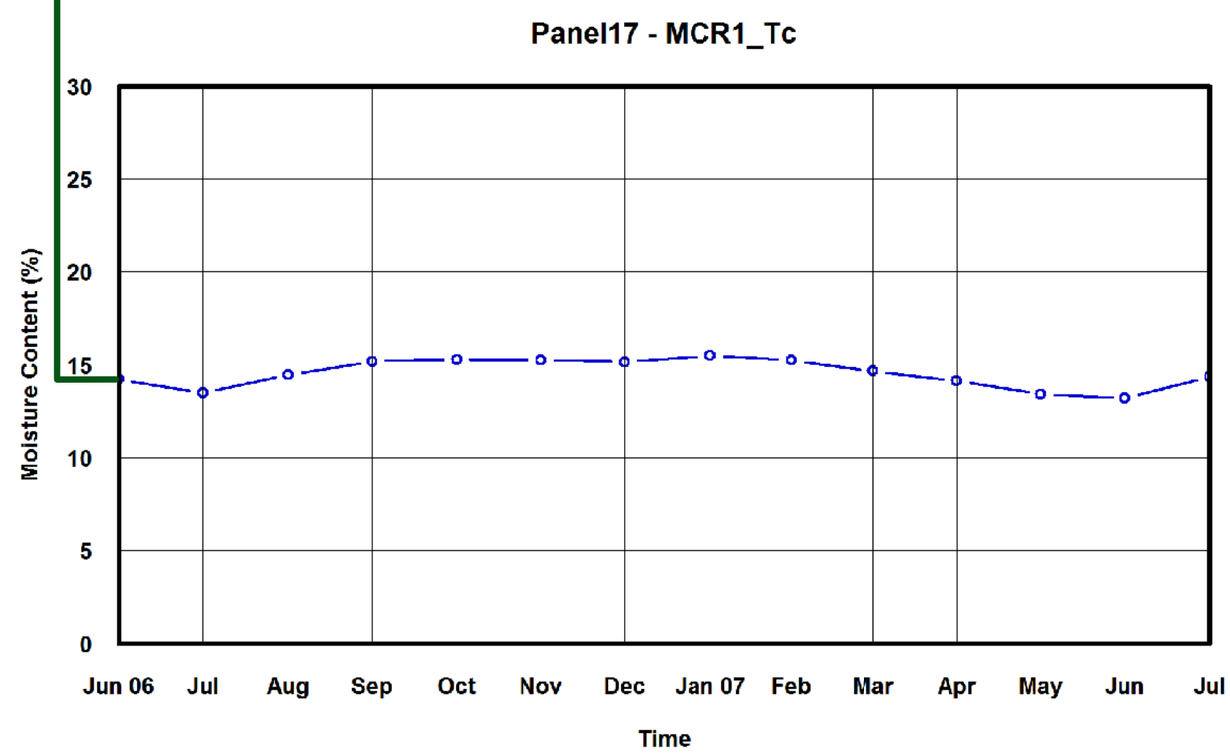
Panel17 - MCR1_Tc
Moisture Content (%)
30
25
20
15
10
5
0
Jun 06
Jul
Aug
Sep
Oct
Nov
Dec
Jan 07
Feb
Mar
Apr
May
Jun
Jul
Time

Panel 17

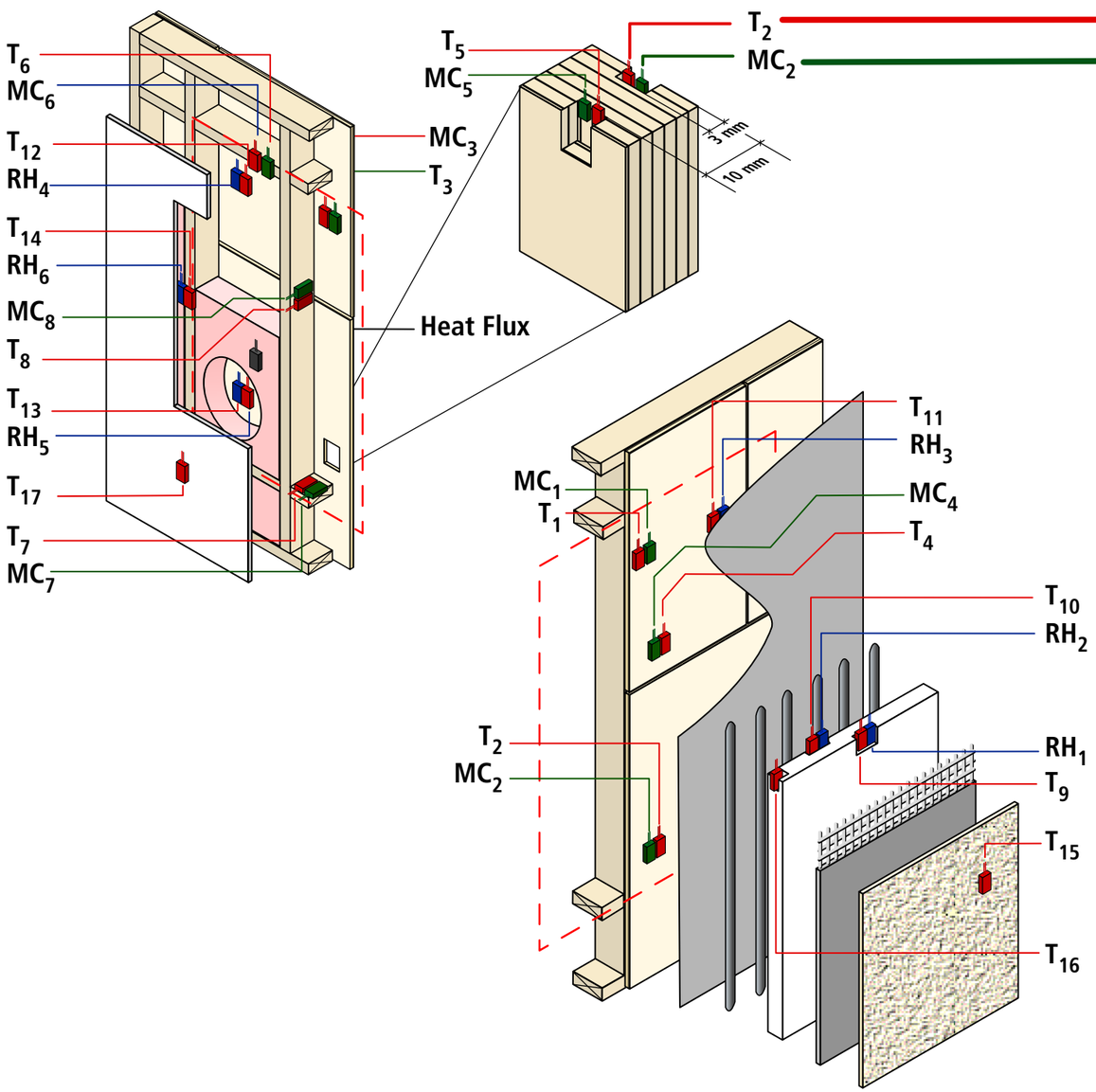
T_6
MC_6
T_{12}
RH_4
T_{14}
RH_6
MC_8
T_8
T_{13}
RH_5
T_{17}
T_7
MC_7
T_5
MC_5
T_2
MC_2
MC_3
T_3
3 mm
10 mm
Heat Flux
T_{11}
RH_3
MC_1
T_1
MC_4
T_4
T_{10}
RH_2
T_2
MC_2
RH_1
T_9
T_{15}
T_{16}

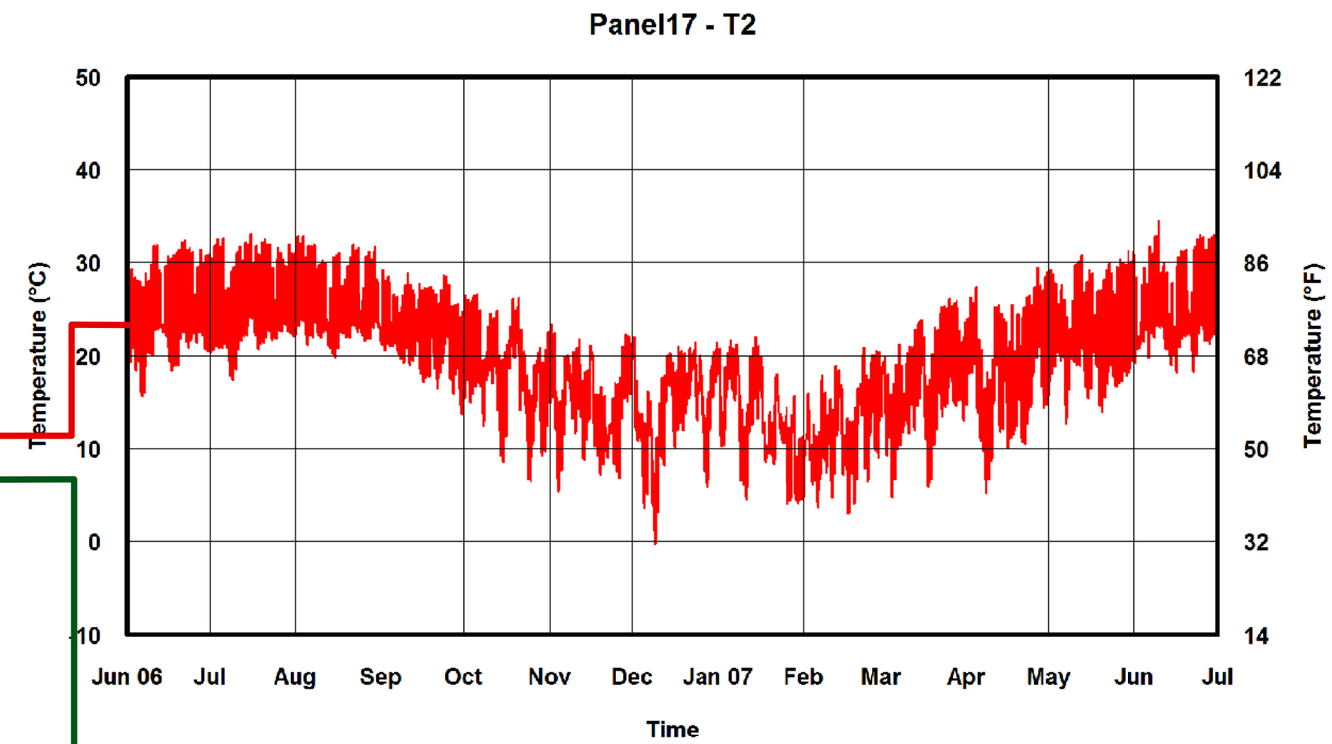
Panel17 - T2
Temperature (°C)
Temperature (°F)
50
40
30
20
10
0
-10
122
104
86
68
50
32
14
Jun 06
Jul
Aug
Sep
Oct
Nov
Dec
Jan 07
Feb
Mar
Apr
May
Jun
Jul
Time

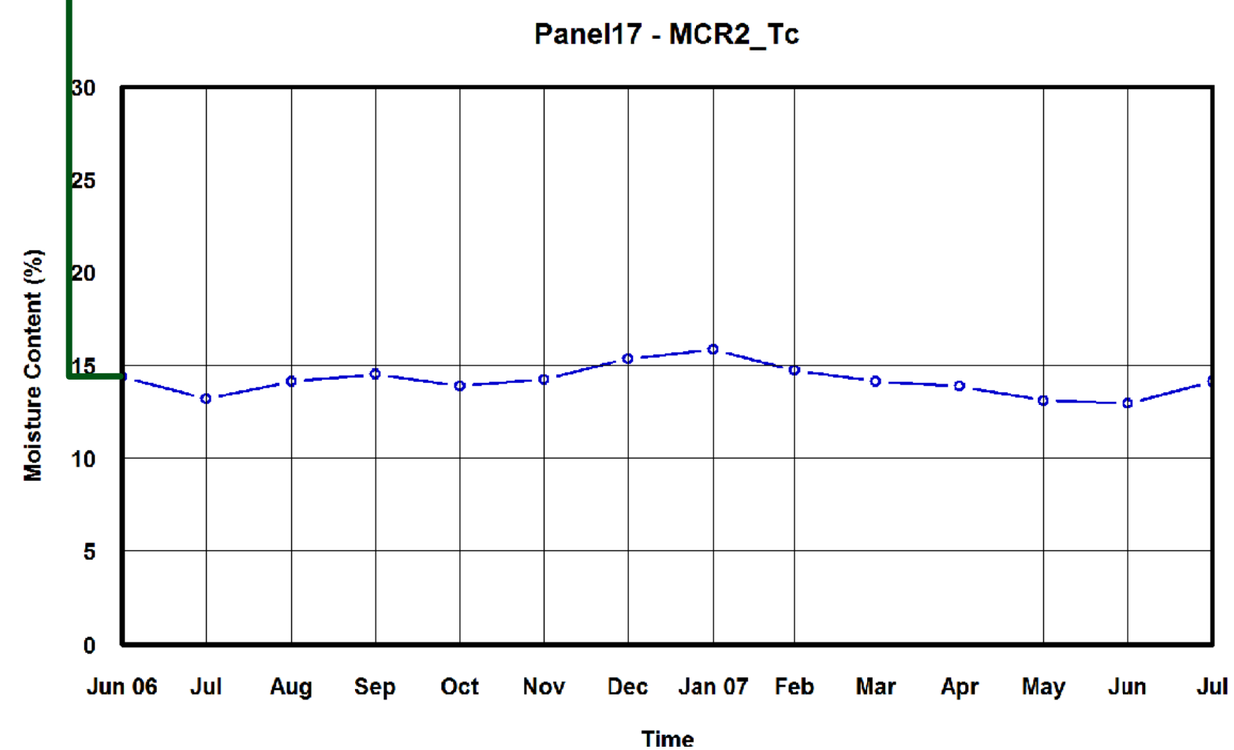
Panel17 - MCR2_Tc
Moisture Content (%)
30
25
20
15
10
5
0
Jun 06
Jul
Aug
Sep
Oct
Nov
Dec
Jan 07
Feb
Mar
Apr
May
Jun
Jul
Time

Panel 17

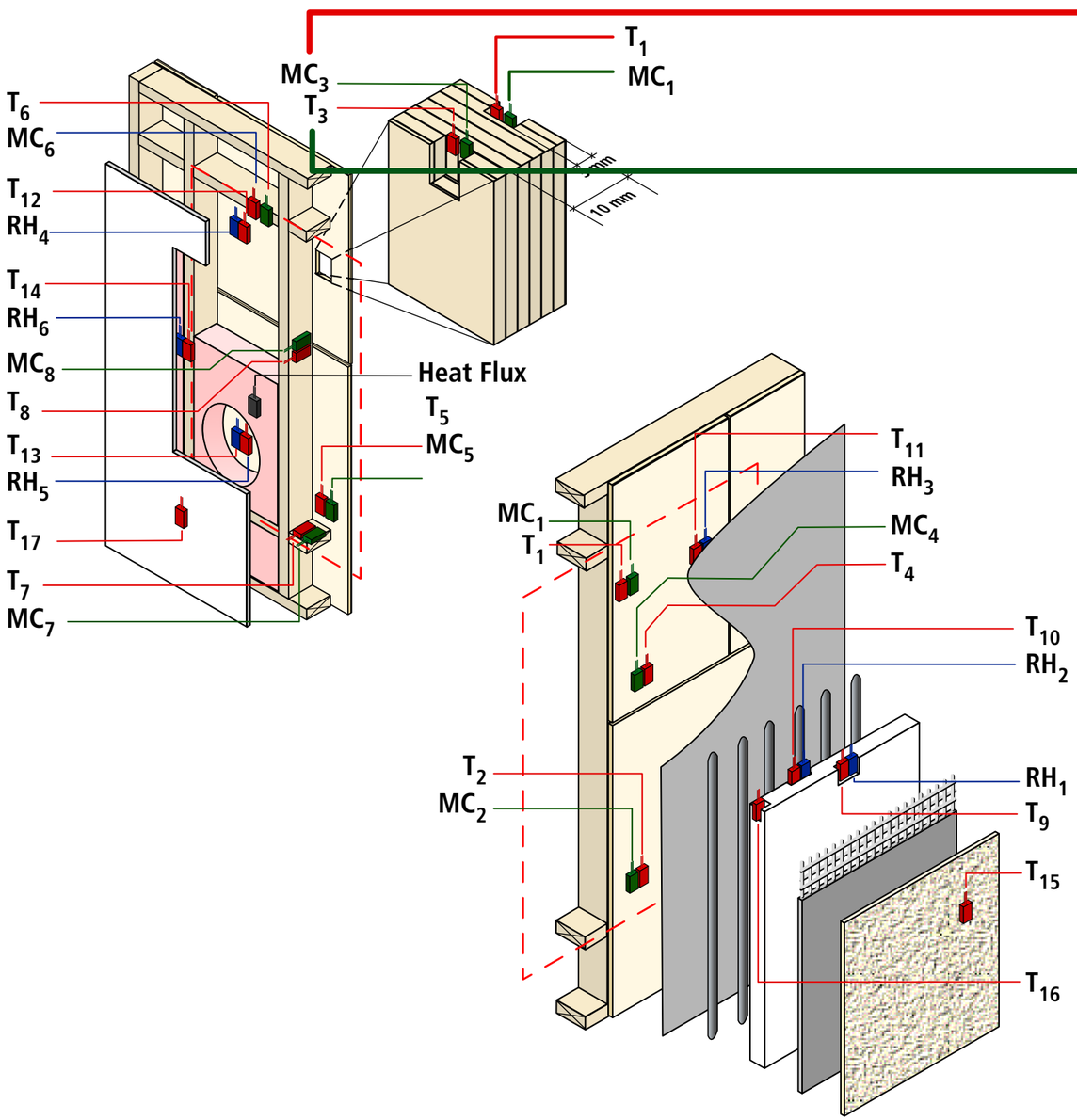
T_6
MC_6
T_{12}
RH_4
T_{14}
RH_6
MC_8
T_8
T_{13}
RH_5
T_{17}
T_7
MC_7
MC_3
T_3
T_1
MC_1
10 mm
Heat Flux
T_5
MC_5
MC_1
T_1
T_{11}
RH_3
MC_4
T_4
T_{10}
RH_2
T_2
MC_2
RH_1
T_9
T_{15}
T_{16}

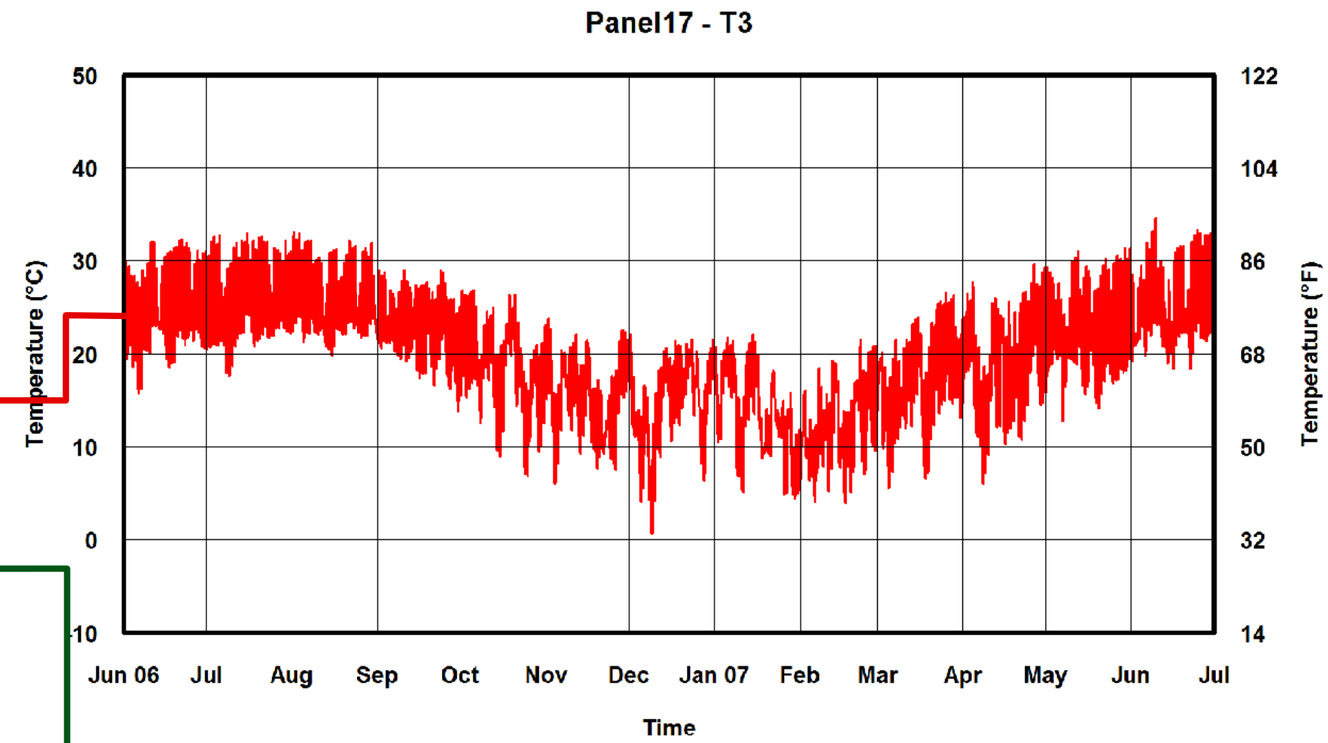
Panel17 - T3
Temperature (°C)
Temperature (°F)
50
40
30
20
10
0
-10
122
104
86
68
50
32
14
Jun 06
Jul
Aug
Sep
Oct
Nov
Dec
Jan 07
Feb
Mar
Apr
May
Jun
Jul
Time

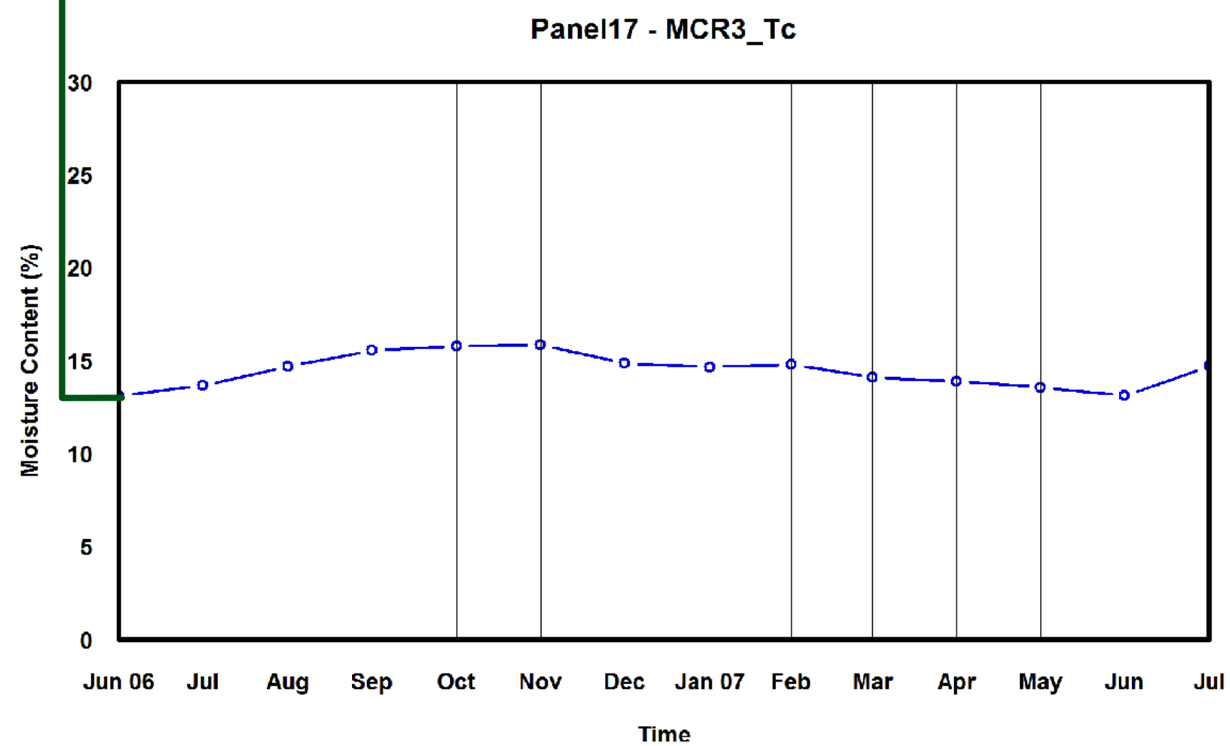
Panel17 - MCR3_Tc
Moisture Content (%)
30
25
20
15
10
5
0
Jun 06
Jul
Aug
Sep
Oct
Nov
Dec
Jan 07
Feb
Mar
Apr
May
Jun
Jul
Time

Panel 17

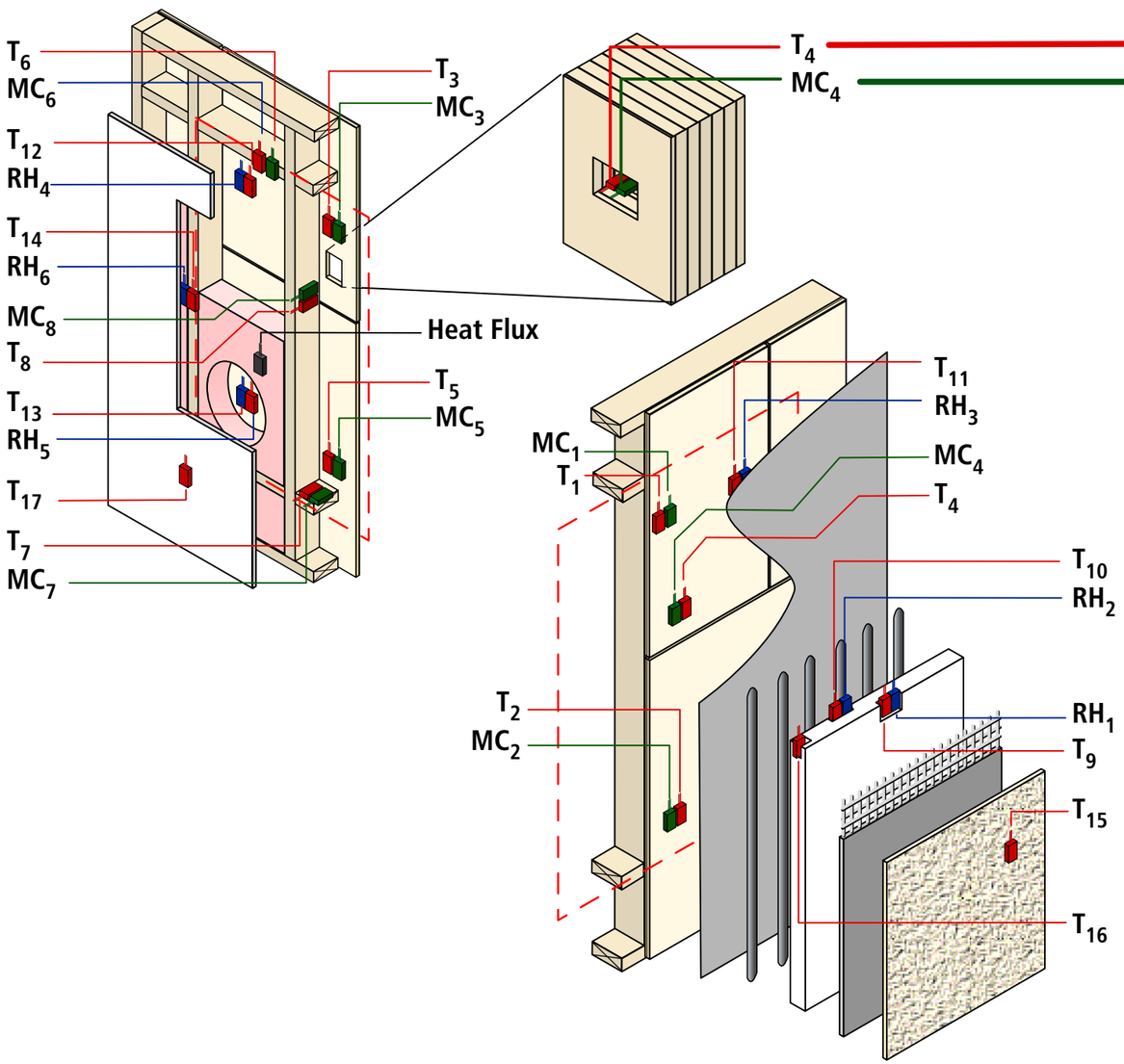
T_6
MC_6
T_{12}
RH_4
T_{14}
RH_6
MC_8
T_8
T_{13}
RH_5
T_{17}
T_7
MC_7
T_3
MC_3
Heat Flux
T_5
MC_5
T_4
MC_4
MC_1
T_1
T_2
MC_2
T_{11}
RH_3
MC_4
T_4
T_{10}
RH_2
RH_1
T_9
T_{15}
T_{16}

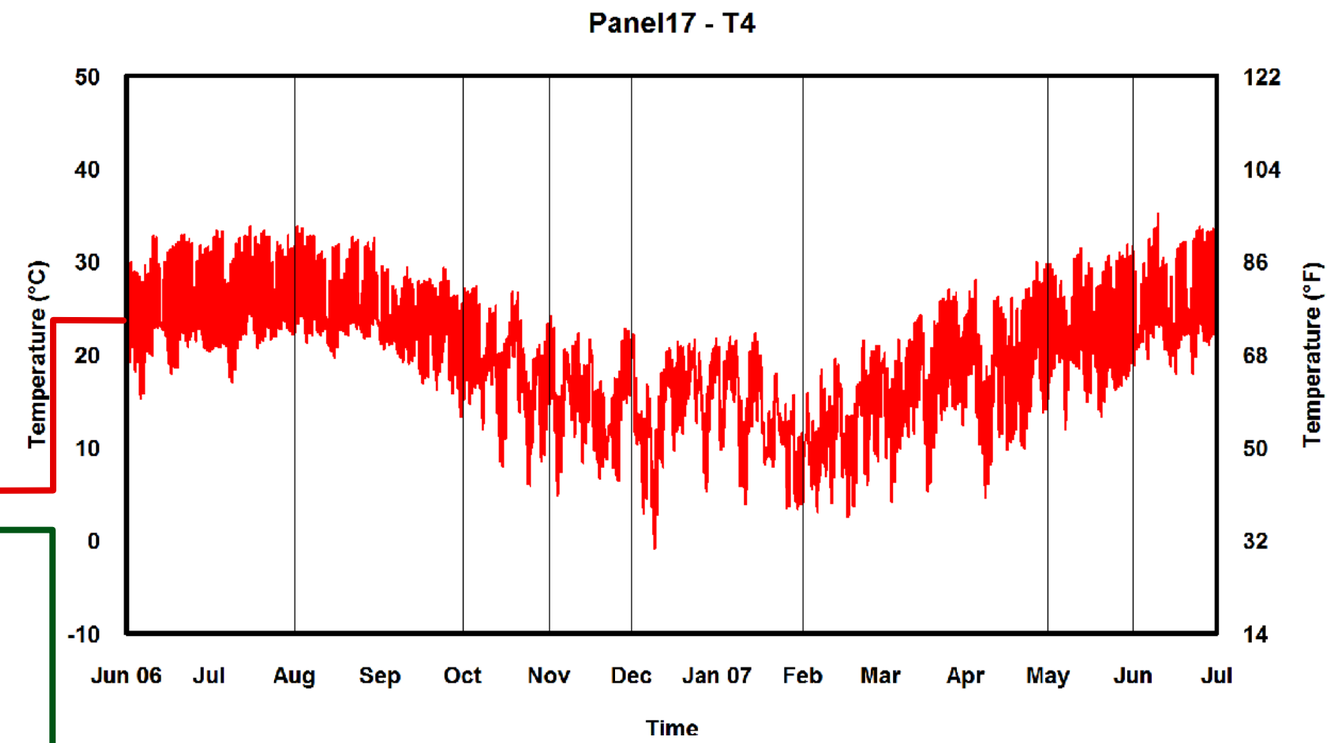
Panel17 - T4
Temperature (°C)
50
40
30
20
10
0
-10
Temperature (°F)
122
104
86
68
50
32
14
Jun 06
Jul
Aug
Sep
Oct
Nov
Dec
Jan 07
Feb
Mar
Apr
May
Jun
Jul
Time

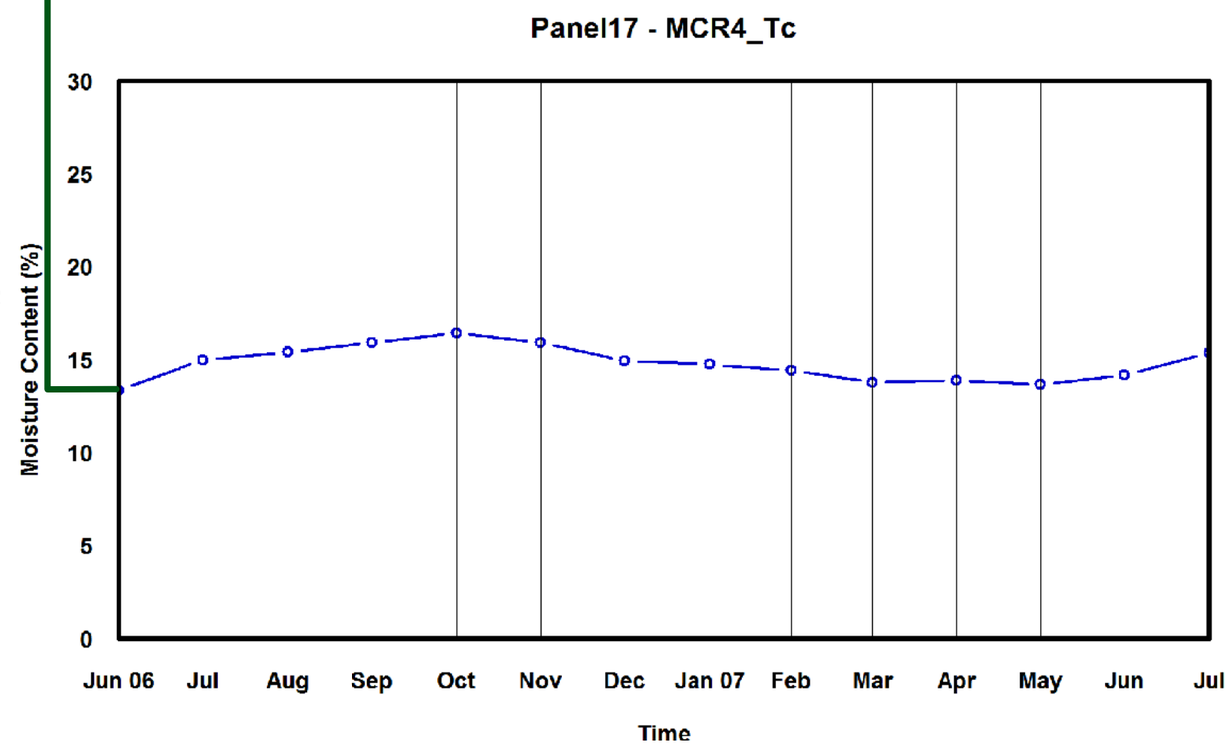
Panel17 - MCR4_Tc
Moisture Content (%)
30
25
20
15
10
5
0
Jun 06
Jul
Aug
Sep
Oct
Nov
Dec
Jan 07
Feb
Mar
Apr
May
Jun
Jul
Time

Panel 17

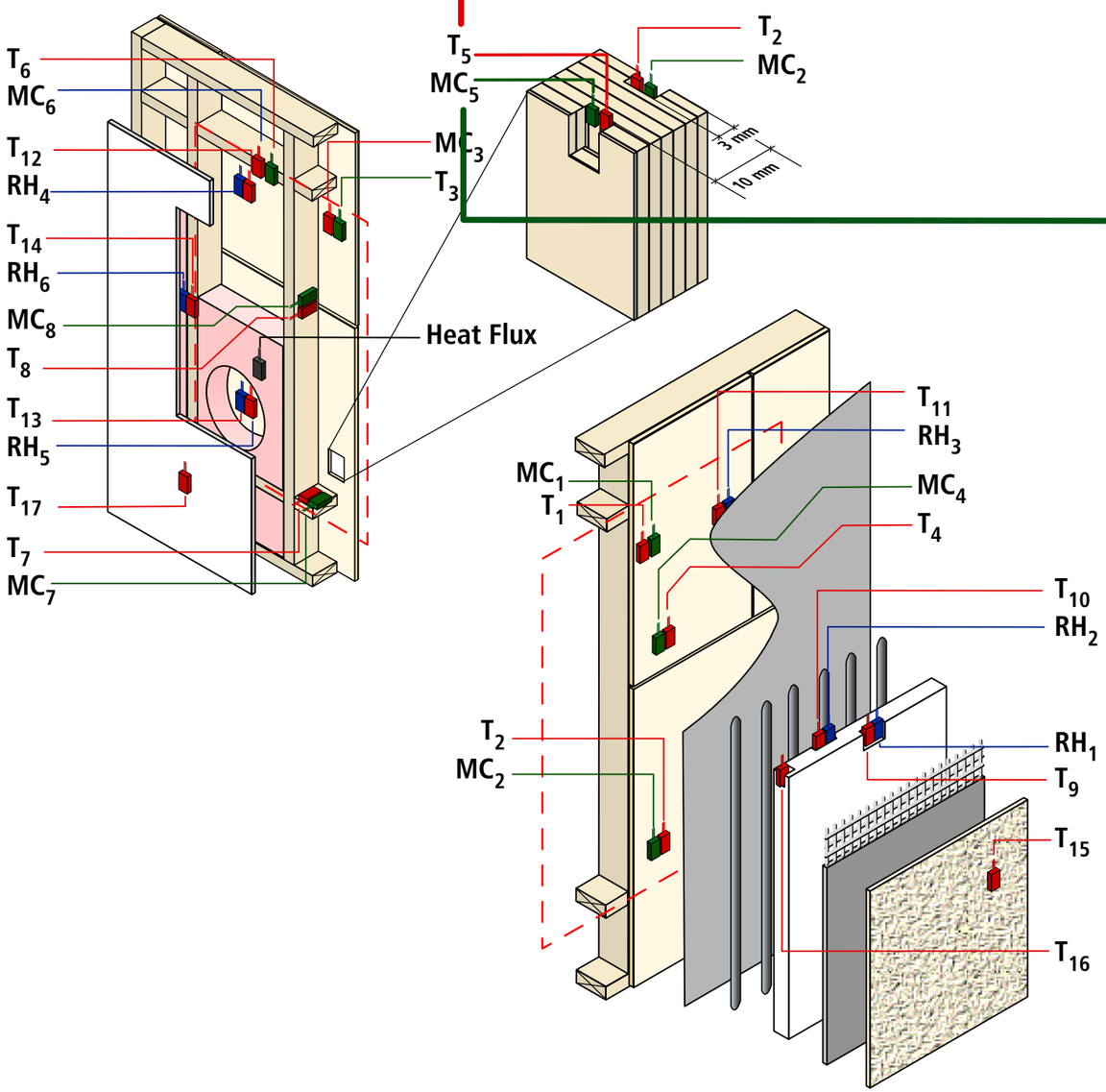
T_6
MC_6
T_{12}
RH_4
T_{14}
RH_6
MC_8
T_8
T_{13}
RH_5
T_{17}
T_7
MC_7
T_5
MC_5
T_2
MC_2
MC_3
T_3
3 mm
10 mm
Heat Flux
T_{11}
RH_3
MC_1
T_1
MC_4
T_4
T_{10}
RH_2
T_2
MC_2
RH_1
T_9
T_{15}
T_{16}

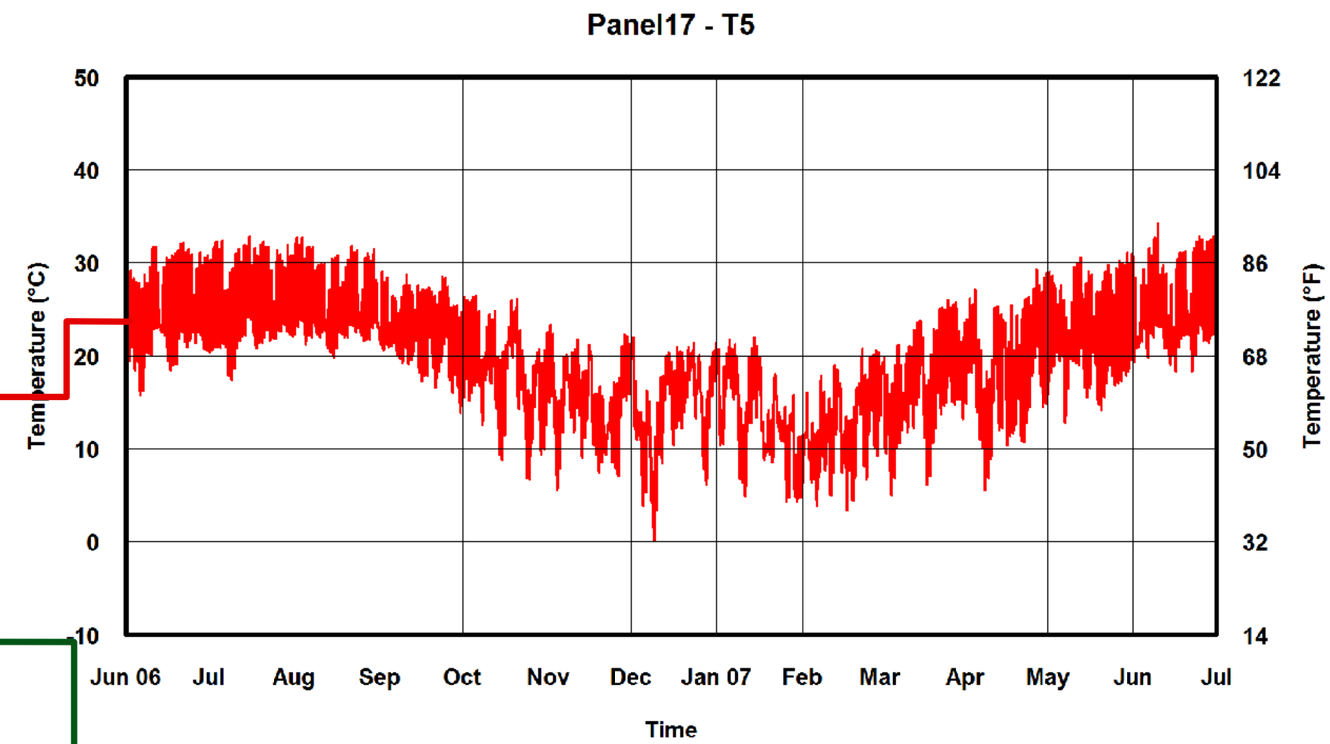
Panel17 - T5
Temperature (°C)
Temperature (°F)
50
40
30
20
10
0
-10
122
104
86
68
50
32
14
Jun 06
Jul
Aug
Sep
Oct
Nov
Dec
Jan 07
Feb
Mar
Apr
May
Jun
Jul
Time

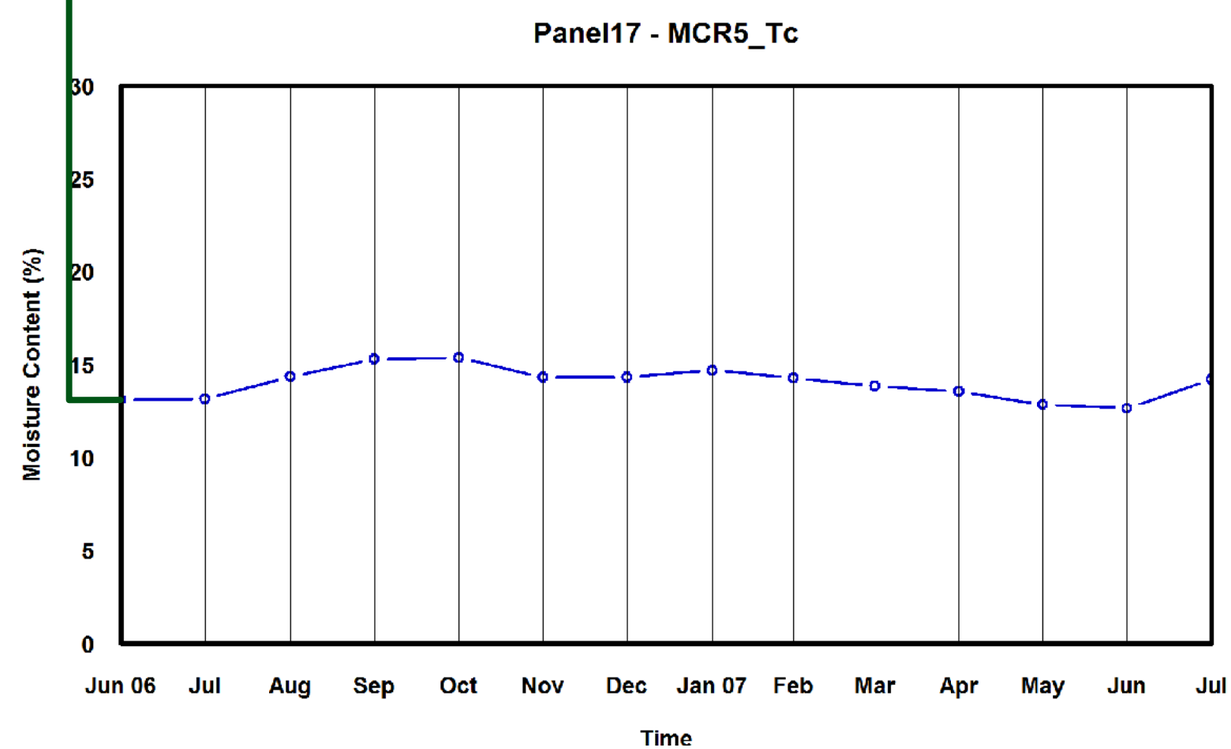
Panel17 - MCR5_Tc
Moisture Content (%)
30
25
20
15
10
5
0
Jun 06
Jul
Aug
Sep
Oct
Nov
Dec
Jan 07
Feb
Mar
Apr
May
Jun
Jul
Time

Panel 17

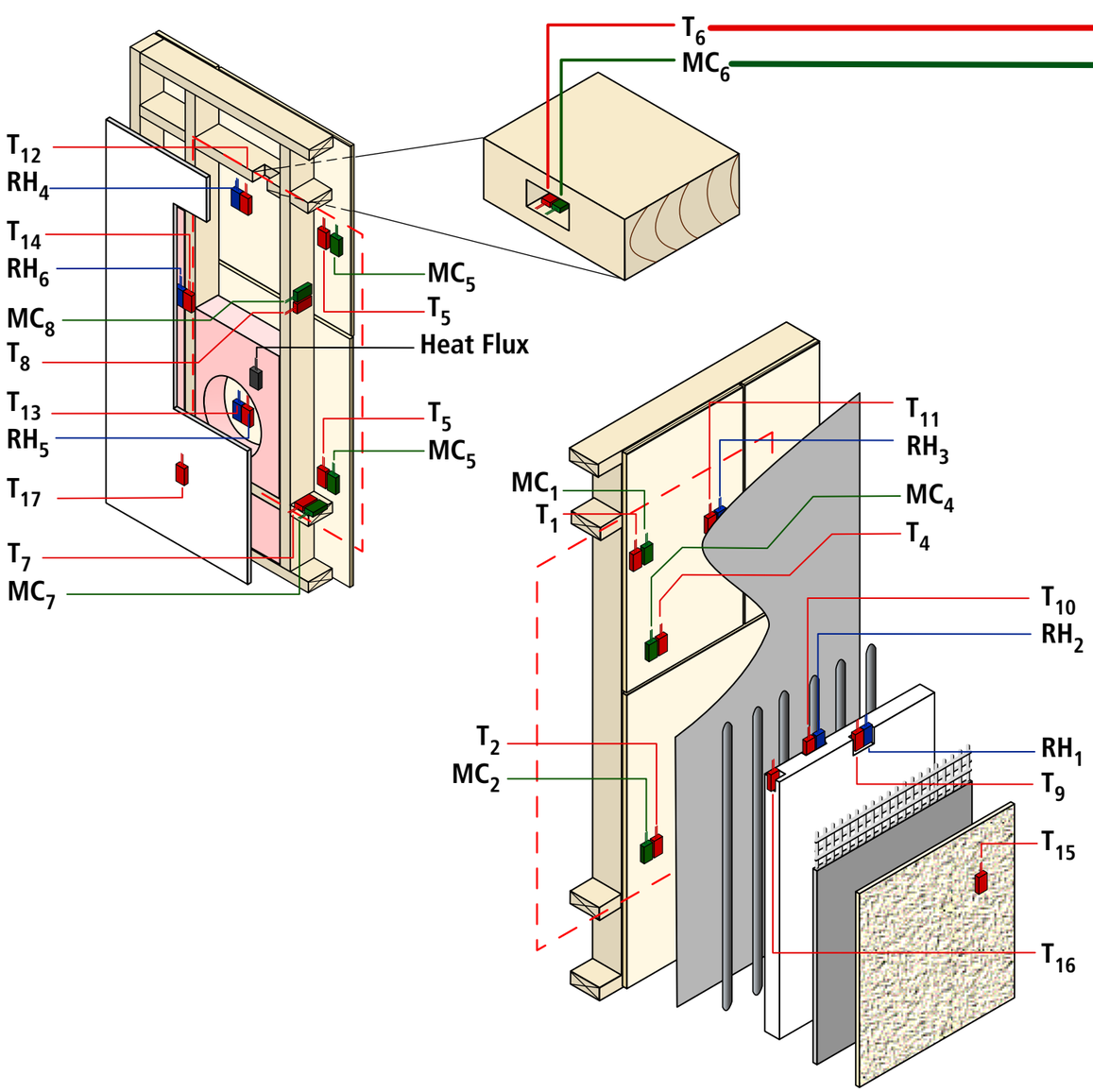
T_6
MC_6
T_{12}
RH_4
T_{14}
RH_6
MC_8
T_8
T_{13}
RH_5
T_{17}
T_7
MC_7
MC_5
T_5
Heat Flux
T_5
MC_5
T_{11}
RH_3
MC_1
T_1
MC_4
T_4
T_{10}
RH_2
T_2
MC_2
RH_1
T_9
T_{15}
T_{16}

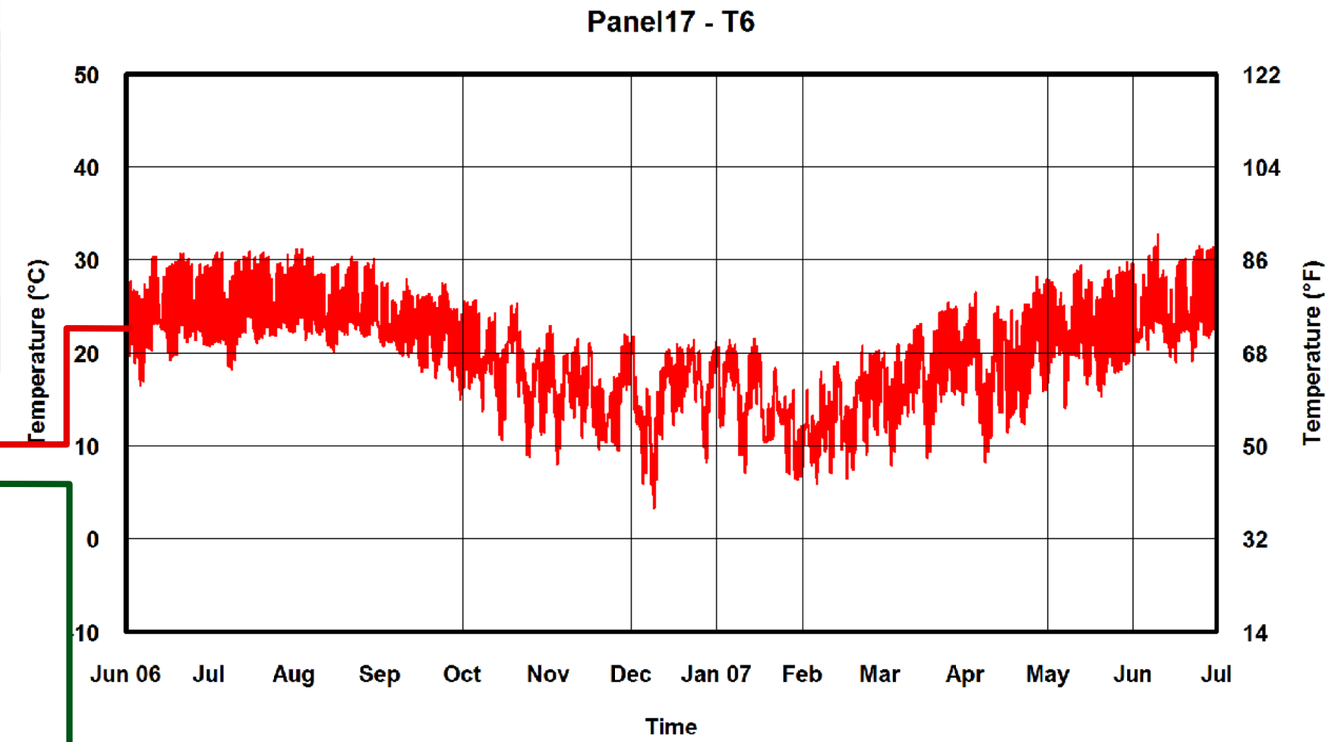
Panel17 - T6
Temperature (°C)
Temperature (°F)
50
40
30
20
10
0
-10
122
104
86
68
50
32
14
Jun 06
Jul
Aug
Sep
Oct
Nov
Dec
Jan 07
Feb
Mar
Apr
May
Jun
Jul
Time

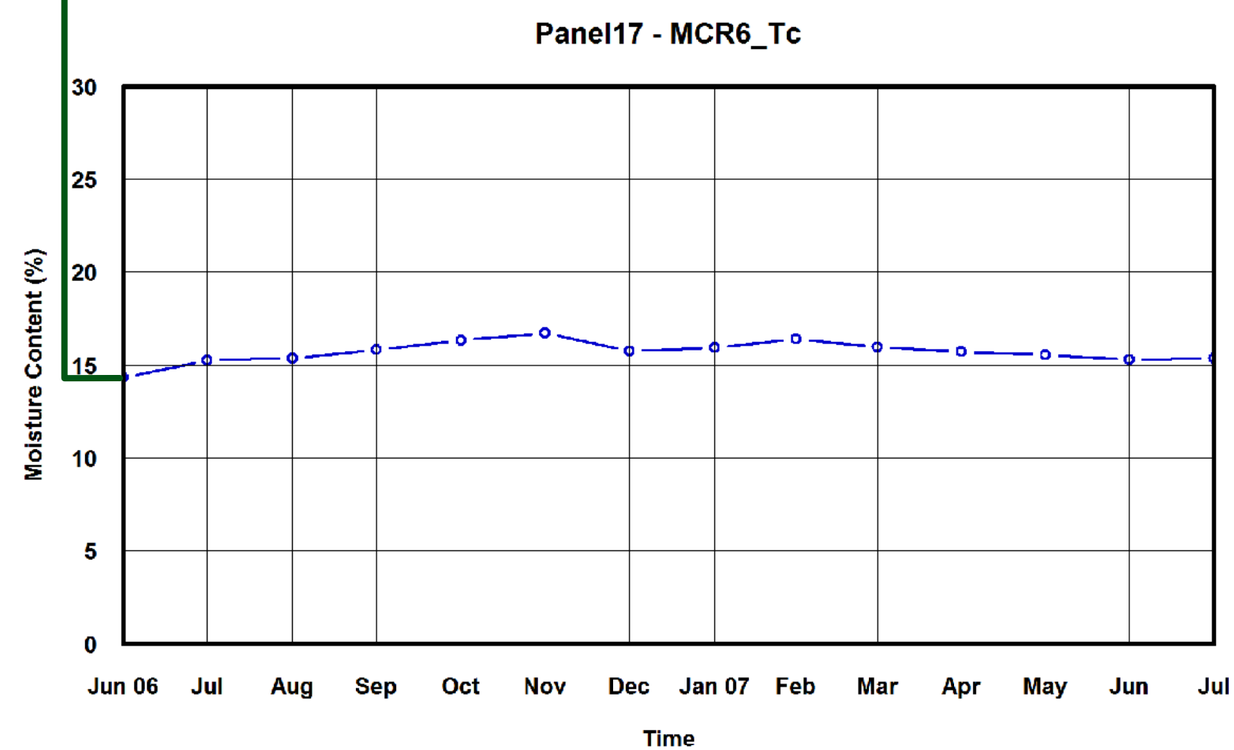
Panel17 - MCR6_Tc
Moisture Content (%)
30
25
20
15
10
5
0
Jun 06
Jul
Aug
Sep
Oct
Nov
Dec
Jan 07
Feb
Mar
Apr
May
Jun
Jul
Time

Panel 17

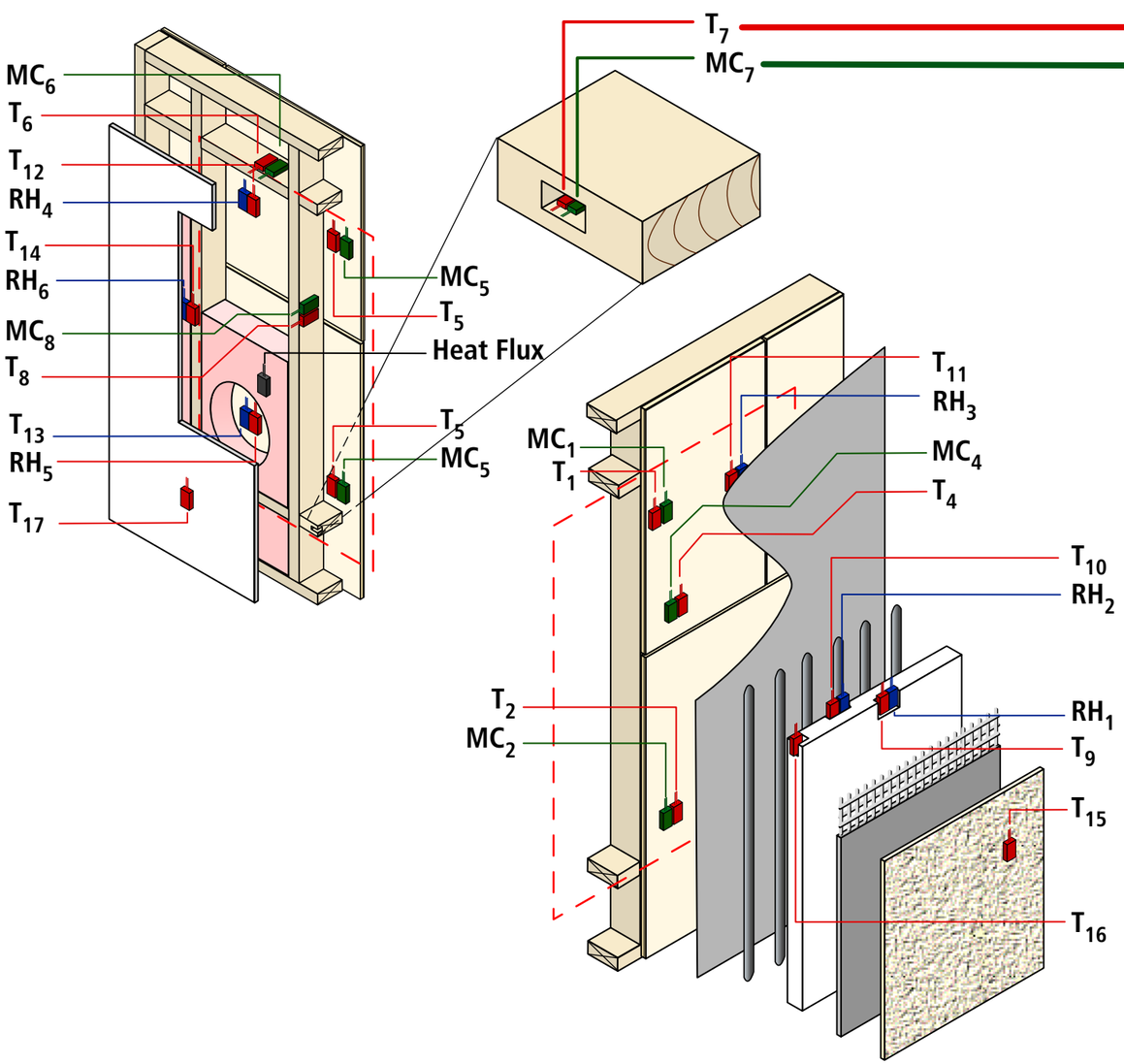
MC6
T6
T12
RH4
T14
RH6
MC8
T8
T13
RH5
T17
MC5
T5
Heat Flux
T5
MC5
T7
MC7
T11
RH3
MC1
T1
MC4
T4
T10
RH2
T2
MC2
RH1
T9
T15
T16

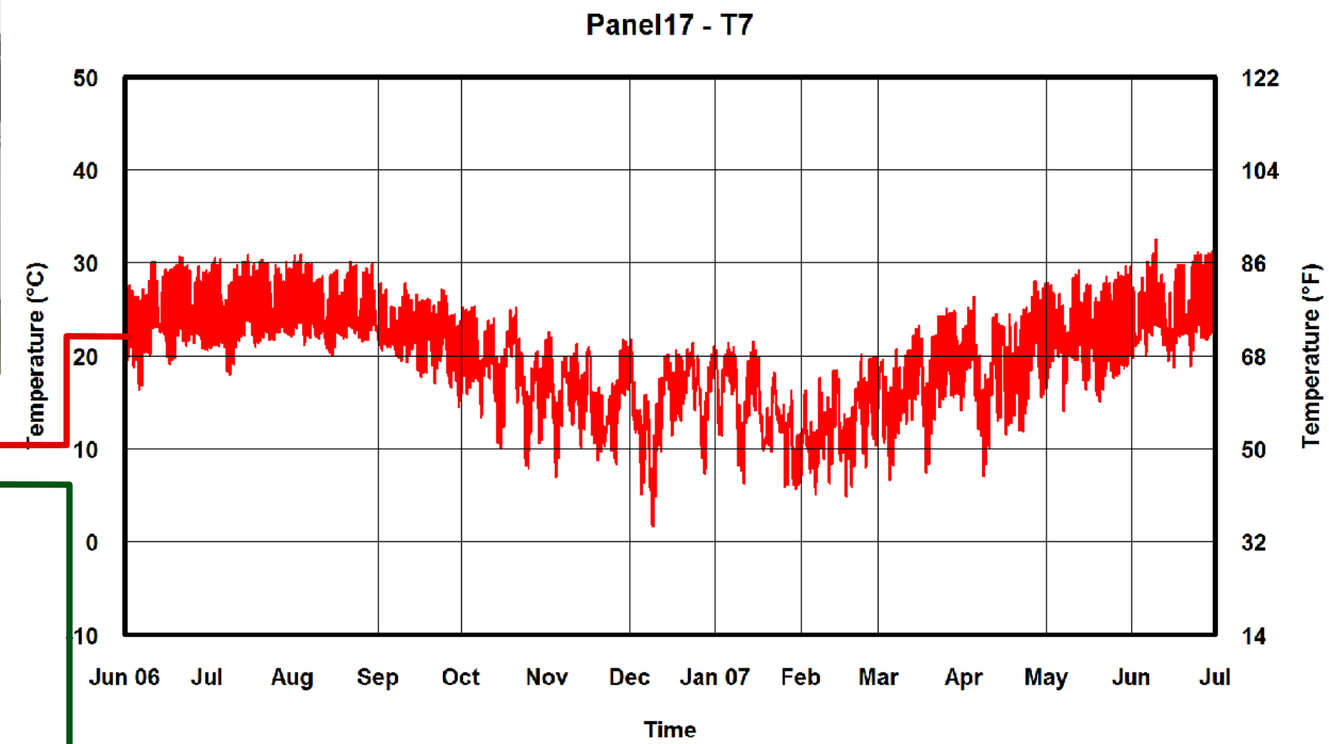
Panel17 - T7
Temperature (°C)
Temperature (°F)
50
40
30
20
10
0
-10
122
104
86
68
50
32
14
Jun 06
Jul
Aug
Sep
Oct
Nov
Dec
Jan 07
Feb
Mar
Apr
May
Jun
Jul
Time

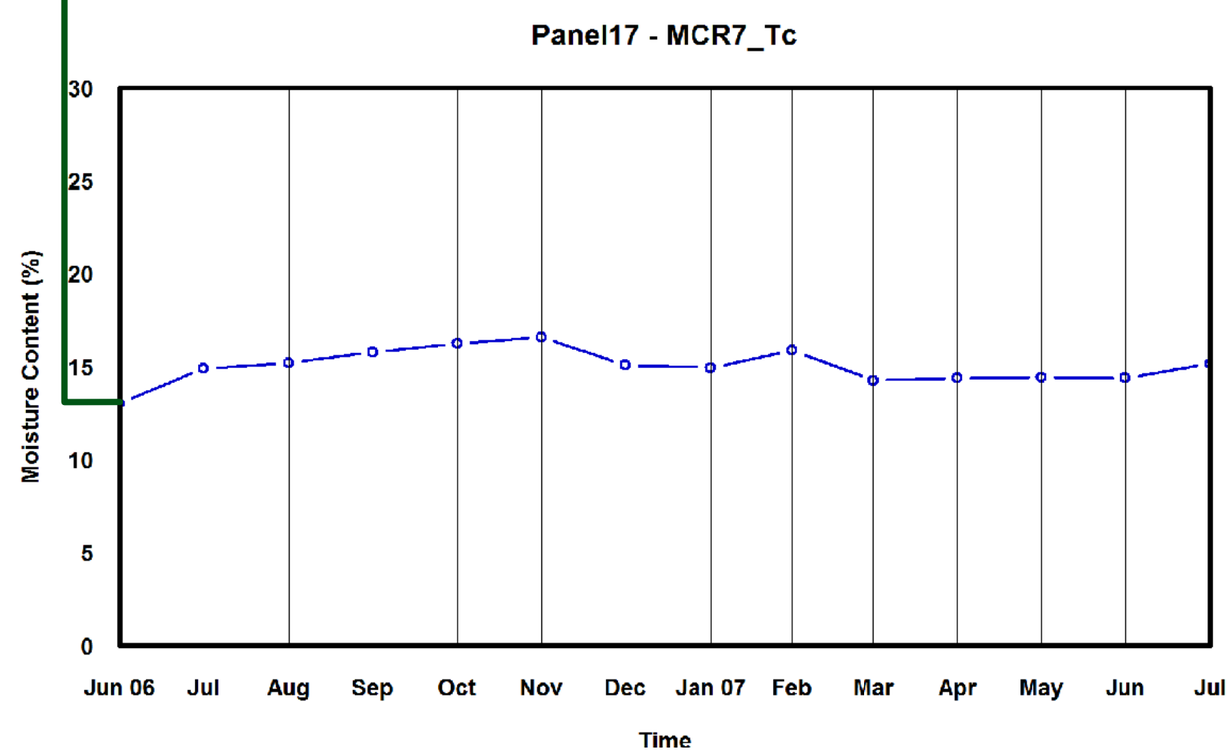
Panel17 - MCR7_Tc
Moisture Content (%)
30
25
20
15
10
5
0
Jun 06
Jul
Aug
Sep
Oct
Nov
Dec
Jan 07
Feb
Mar
Apr
May
Jun
Jul
Time

Panel 17

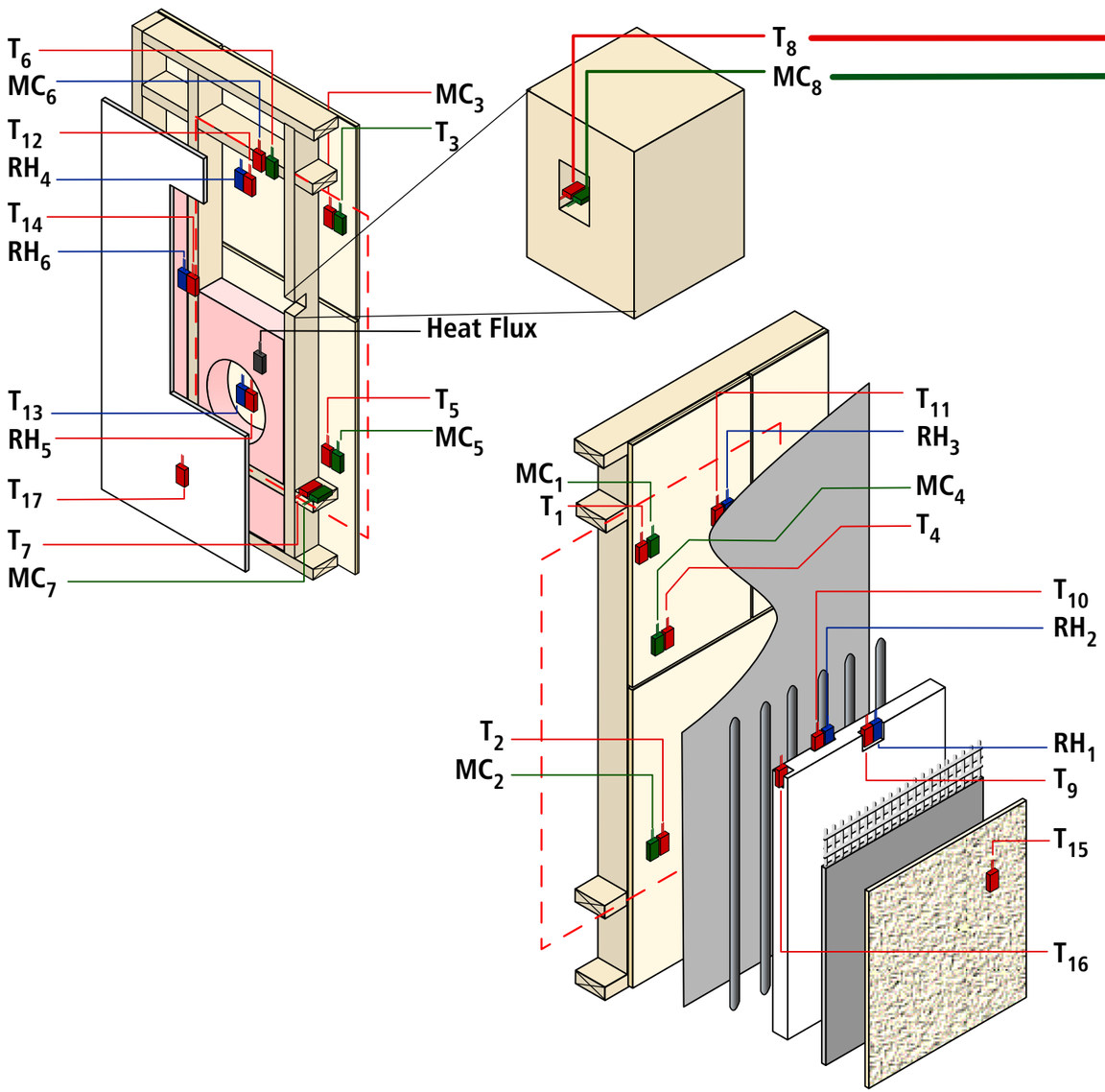
T_6
MC_6
T_{12}
RH_4
T_{14}
RH_6
MC_3
T_3
T_8
MC_8
Heat Flux
T_{13}
RH_5
T_{17}
T_7
MC_7
T_5
MC_5
T_{11}
RH_3
MC_1
T_1
MC_4
T_4
T_{10}
RH_2
T_2
MC_2
RH_1
T_9
T_{15}
T_{16}

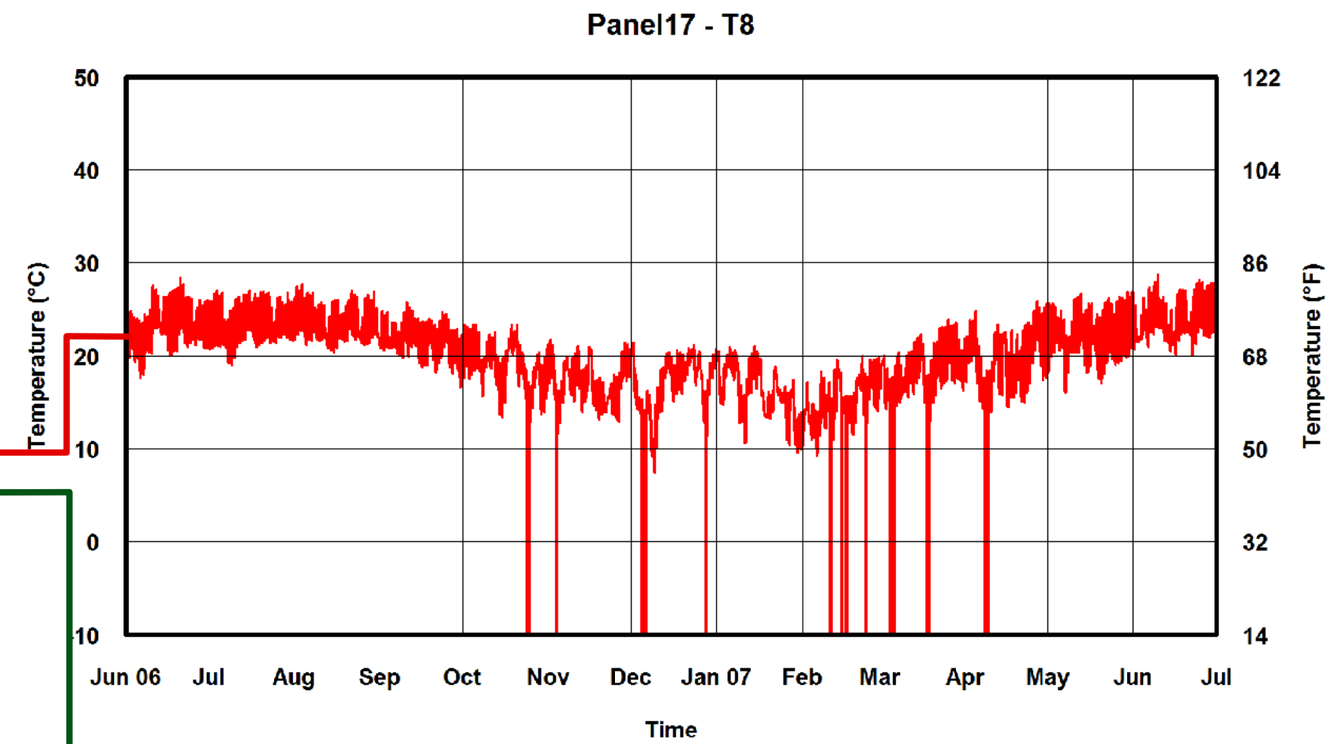
Panel17 - T8
Temperature (°C)
Temperature (°F)
50
40
30
20
10
0
-10
122
104
86
68
50
32
14
Jun 06
Jul
Aug
Sep
Oct
Nov
Dec
Jan 07
Feb
Mar
Apr
May
Jun
Jul
Time

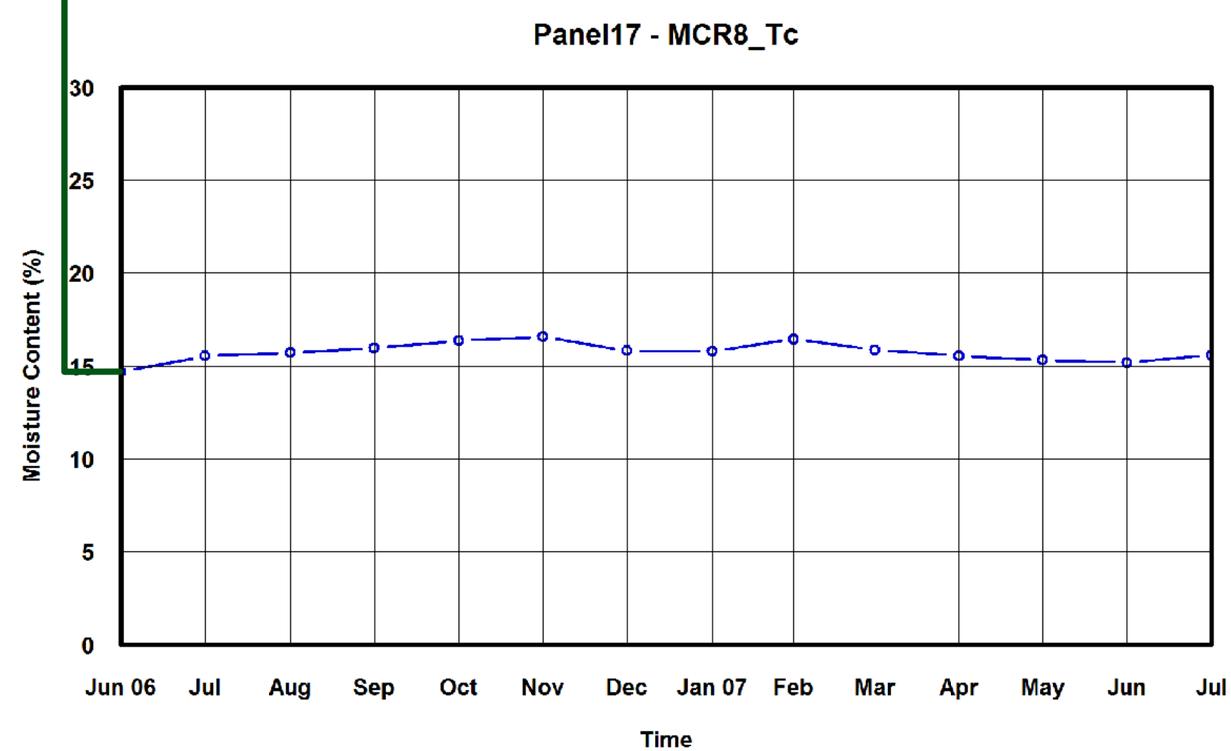
Panel17 - MCR8_Tc
Moisture Content (%)
30
25
20
15
10
5
0
Jun 06
Jul
Aug
Sep
Oct
Nov
Dec
Jan 07
Feb
Mar
Apr
May
Jun
Jul
Time

Panel 17

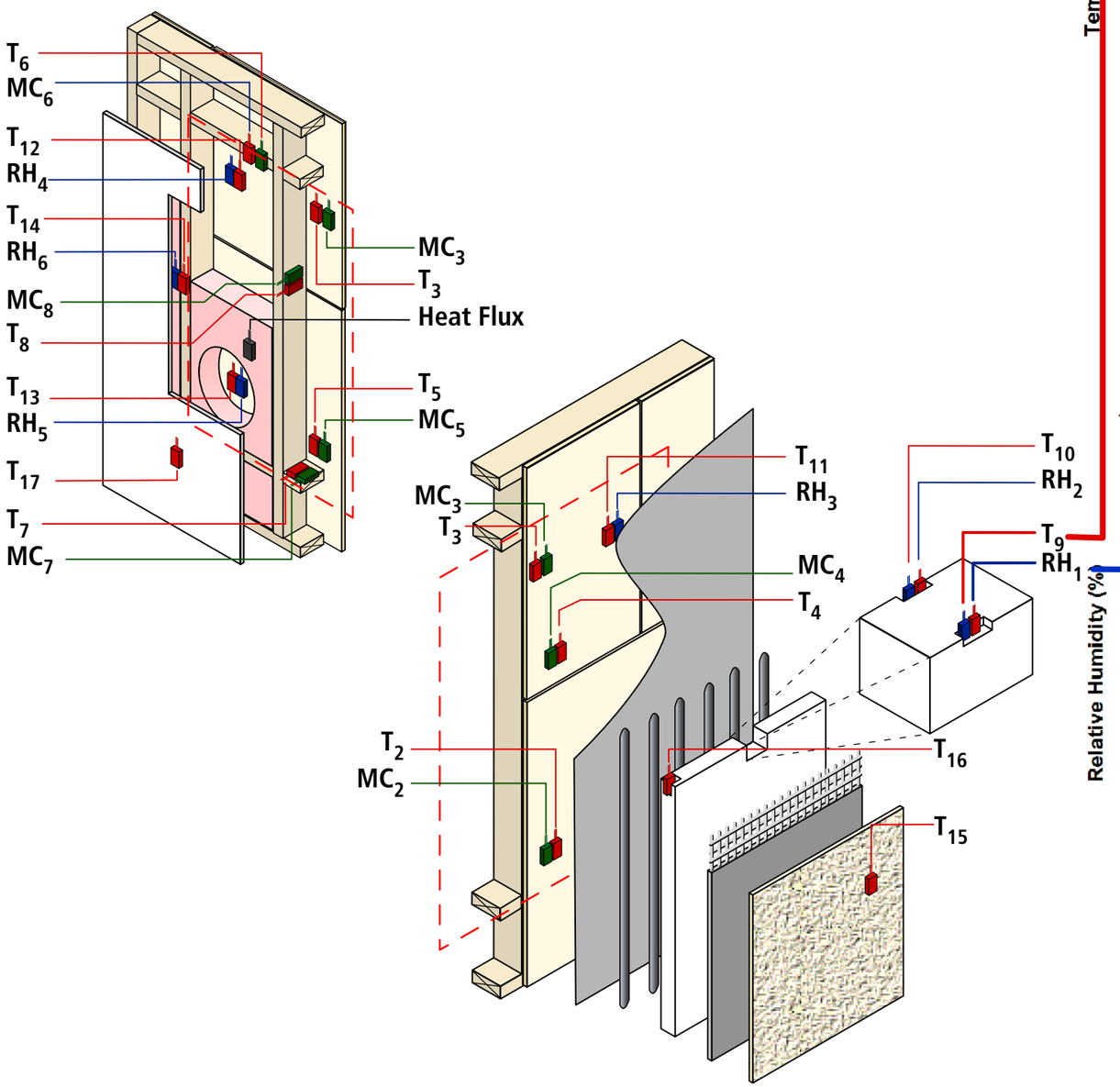
T_6
MC_6
T_{12}
RH_4
T_{14}
RH_6
MC_8
T_8
T_{13}
RH_5
T_{17}
T_7
MC_7
MC_3
T_3
Heat Flux
T_5
MC_5
T_{11}
RH_3
MC_3
T_3
MC_4
T_4
T_2
MC_2
T_{10}
RH_2
T_9
RH_1
T_{16}
T_{15}

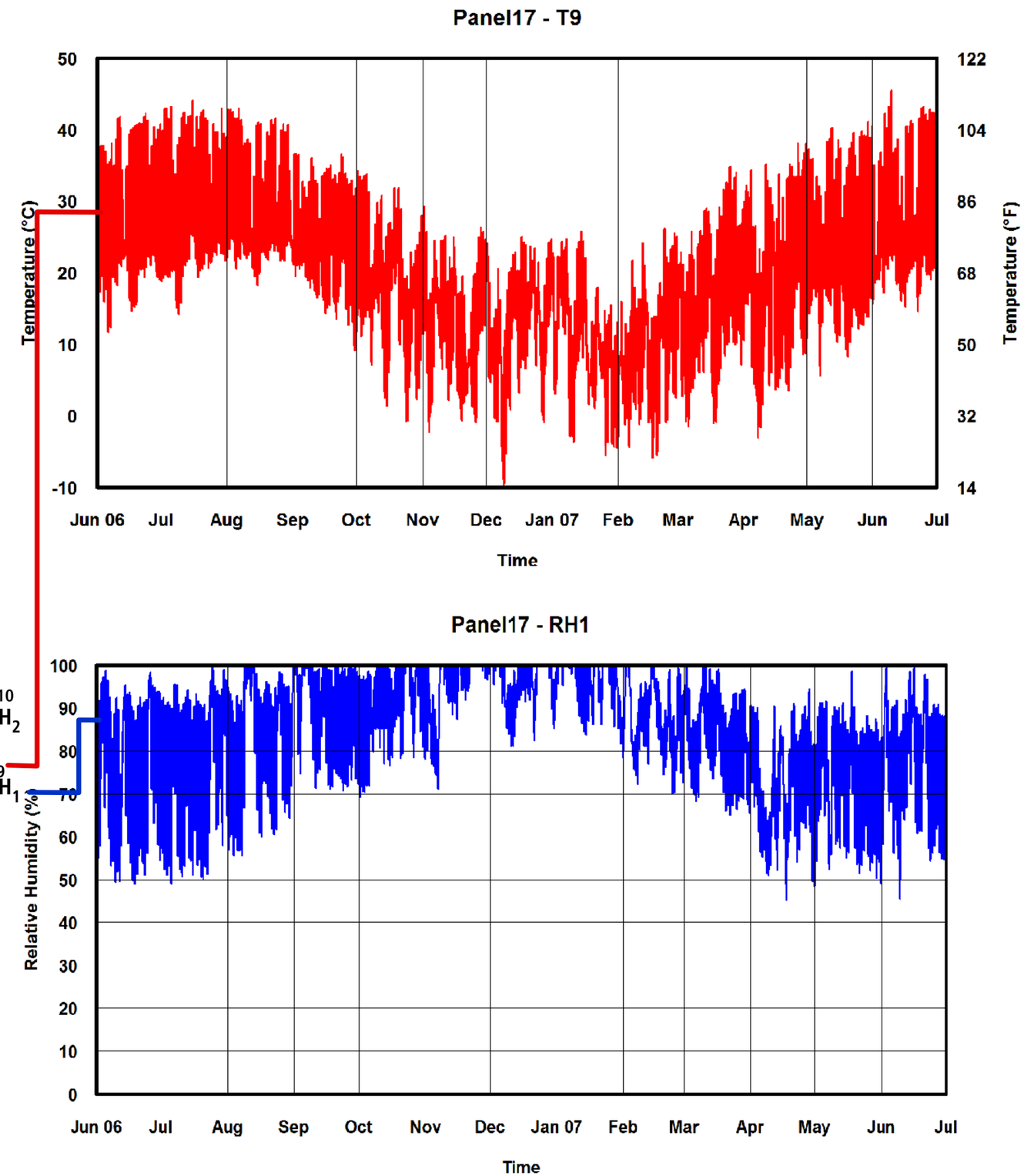
Panel17 - T9
Temperature (°C)
Temperature (°F)
50
40
30
20
10
0
-10
122
104
86
68
50
32
14
Jun 06
Jul
Aug
Sep
Oct
Nov
Dec
Jan 07
Feb
Mar
Apr
May
Jun
Jul
Time
Panel17 - RH1
Relative Humidity (%)
100
90
80
70
60
50
40
30
20
10
0
Jun 06
Jul
Aug
Sep
Oct
Nov
Dec
Jan 07
Feb
Mar
Apr
May
Jun
Jul
Time

Panel 17

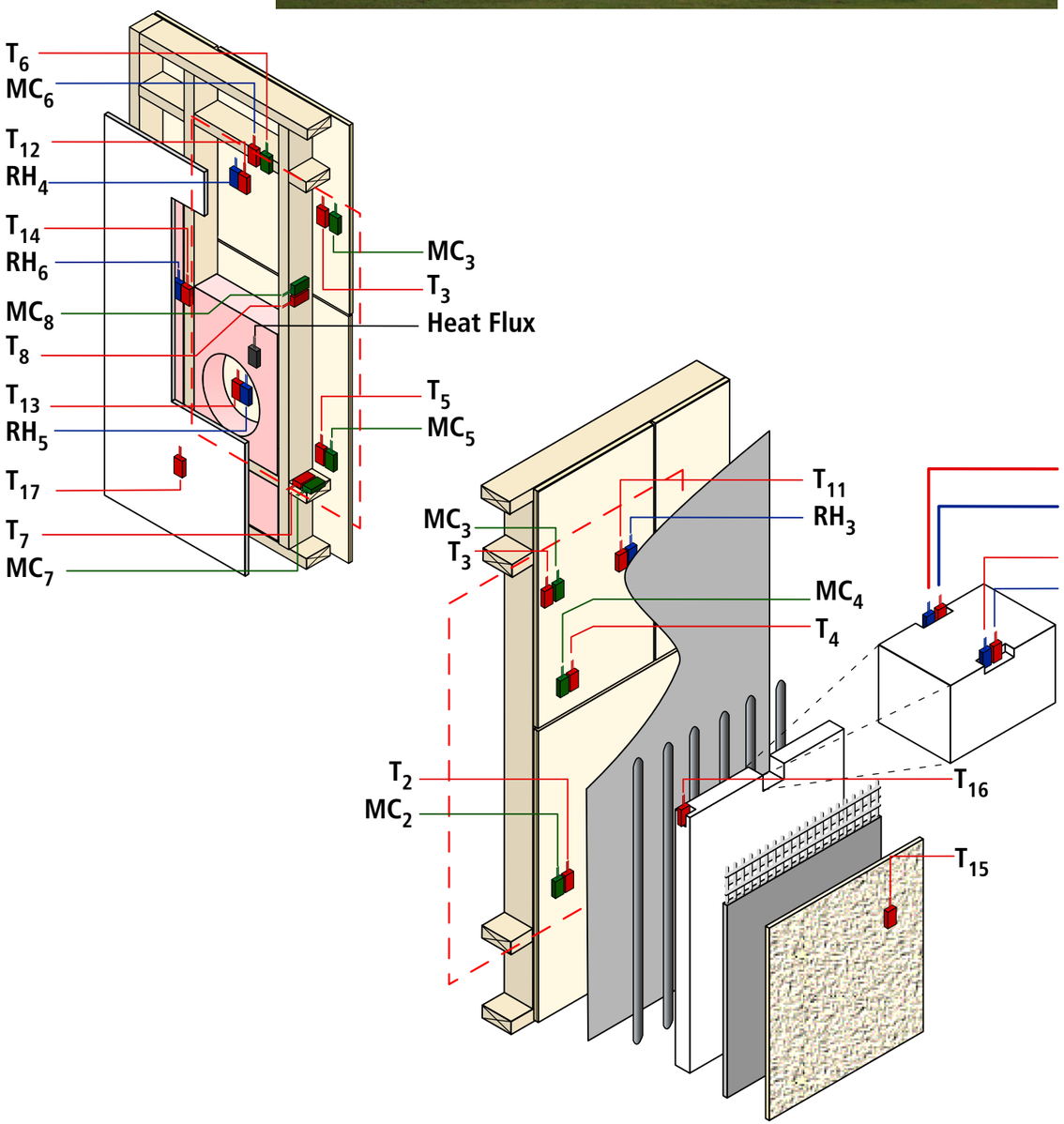
T_6
MC_6
T_{12}
RH_4
T_{14}
RH_6
MC_8
T_8
T_{13}
RH_5
T_{17}
T_7
MC_7
MC_3
T_3
Heat Flux
T_5
MC_5
T_{11}
RH_3
MC_4
T_4
T_2
MC_2
T_{10}
RH_2
T_9
RH_1
T_{16}
T_{15}

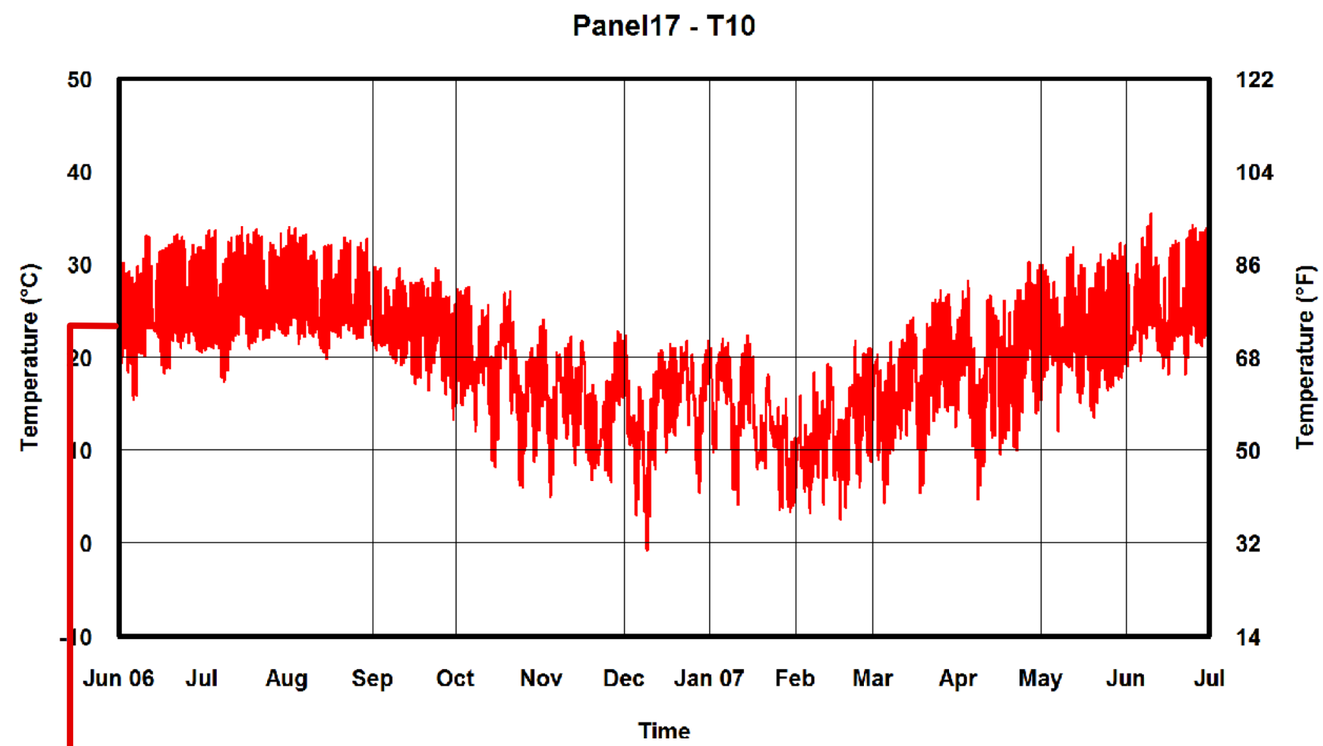
Panel17 - T10
Temperature (°C)
Temperature (°F)
50
40
30
20
10
0
-10
122
104
86
68
50
32
14
Jun 06
Jul
Aug
Sep
Oct
Nov
Dec
Jan 07
Feb
Mar
Apr
May
Jun
Jul
Time

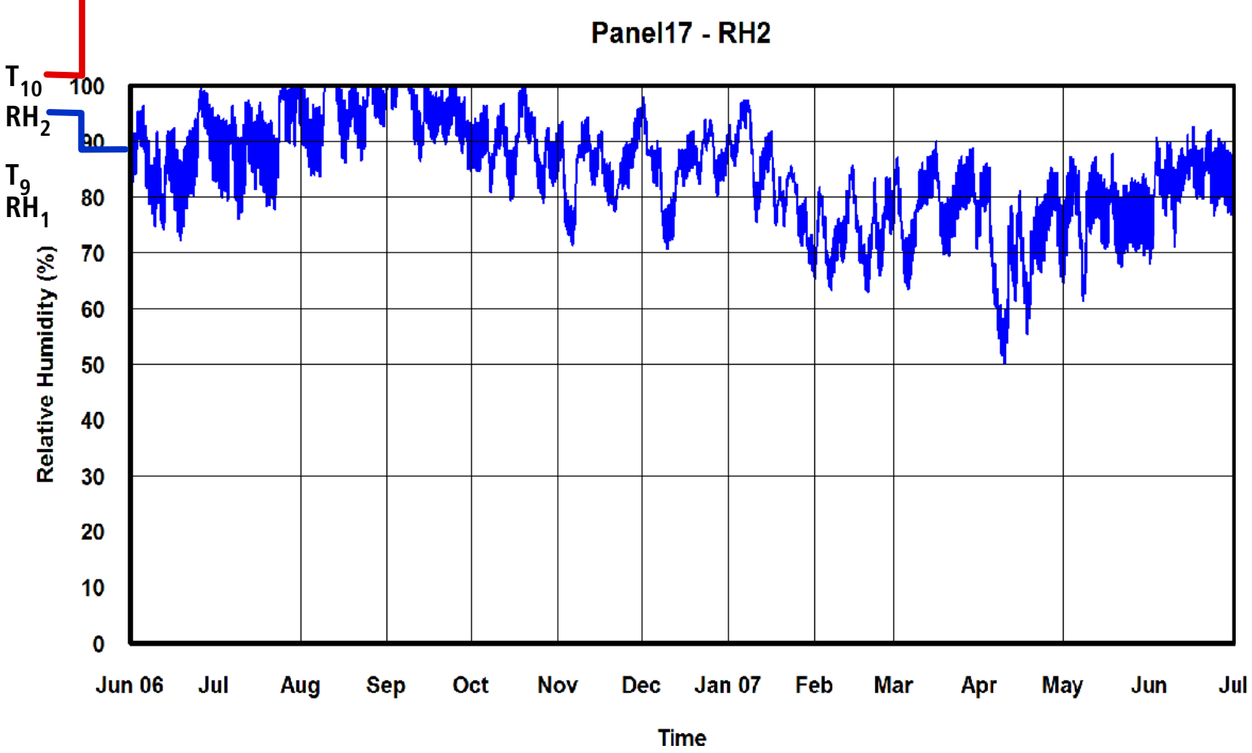
Panel17 - RH2
Relative Humidity (%)
100
90
80
70
60
50
40
30
20
10
0
Jun 06
Jul
Aug
Sep
Oct
Nov
Dec
Jan 07
Feb
Mar
Apr
May
Jun
Jul
Time

Panel 17

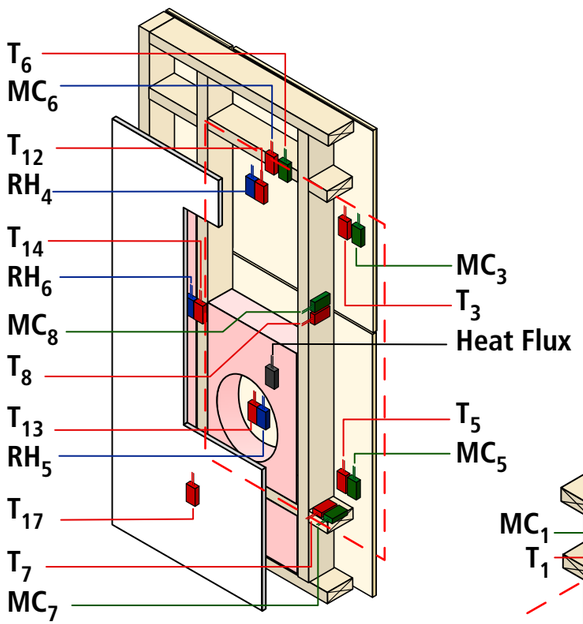
T_6
MC_6
T_{12}
RH_4
T_{14}
RH_6
MC_8
T_8
T_{13}
RH_5
T_{17}
T_7
MC_7
MC_3
T_3
Heat Flux
T_5
MC_5

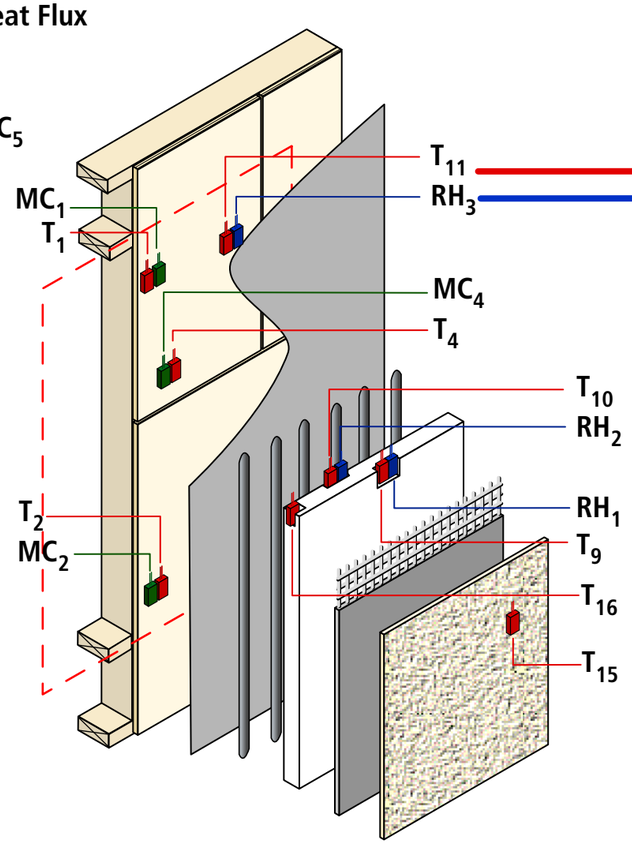
T_{11}
RH_3
MC_1
T_1
MC_4
T_4
T_{10}
RH_2
RH_1
T_9
T_{16}
T_{15}
T_2
MC_2

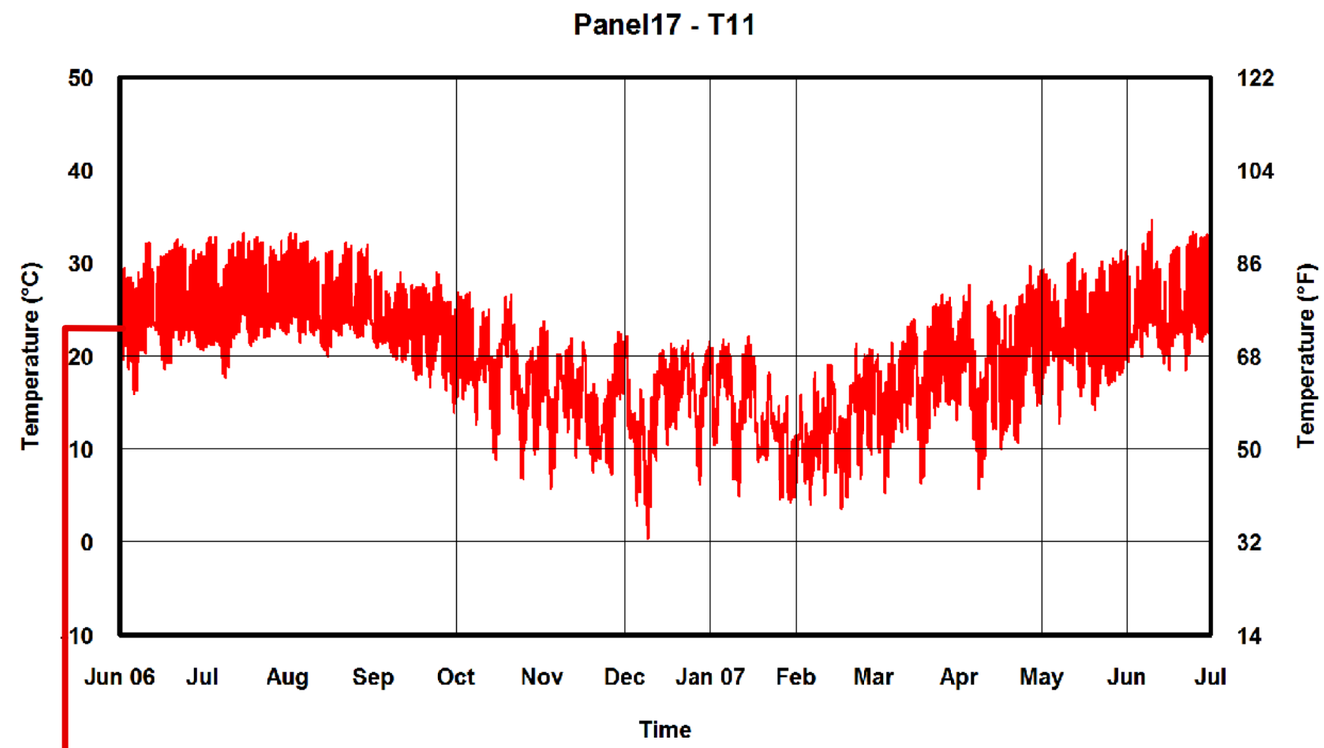
Panel17 - T11
Temperature (°C)
Temperature (°F)
50
40
30
20
10
0
-10
122
104
86
68
50
32
14
Jun 06
Jul
Aug
Sep
Oct
Nov
Dec
Jan 07
Feb
Mar
Apr
May
Jun
Jul
Time

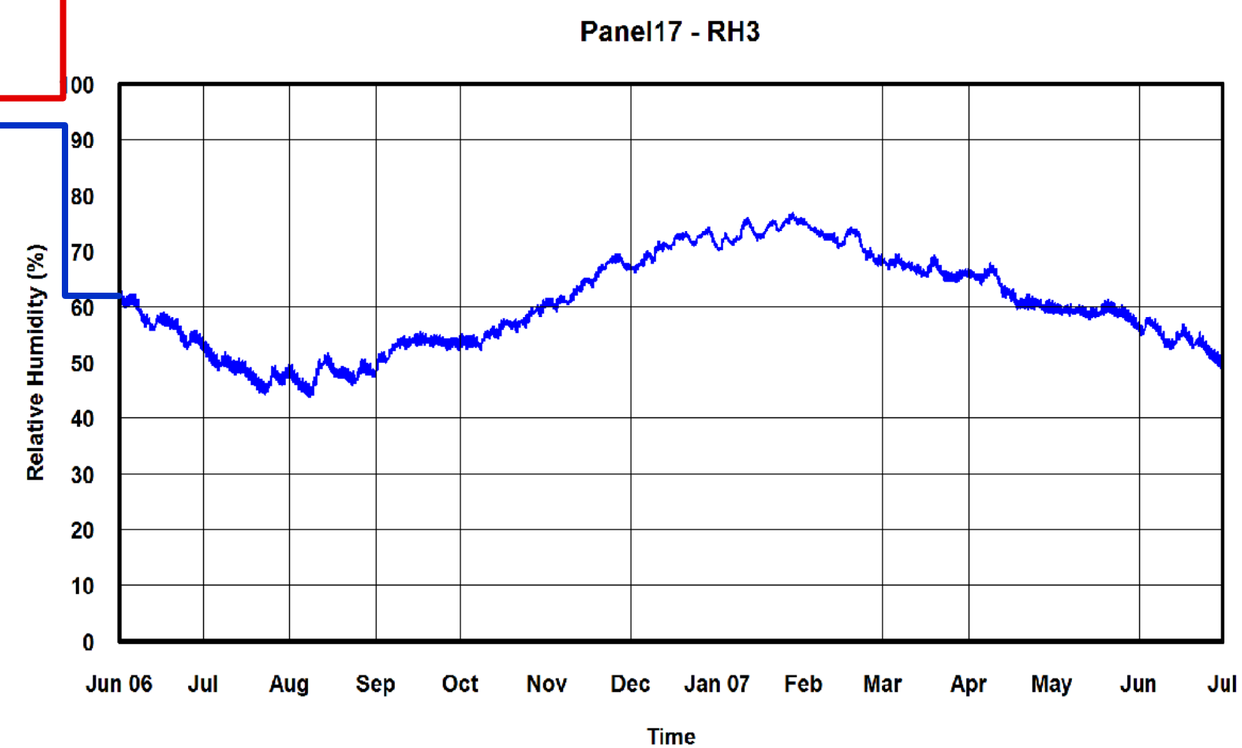
Panel17 - RH3
Relative Humidity (%)
100
90
80
70
60
50
40
30
20
10
0
Jun 06
Jul
Aug
Sep
Oct
Nov
Dec
Jan 07
Feb
Mar
Apr
May
Jun
Jul
Time

Panel 17

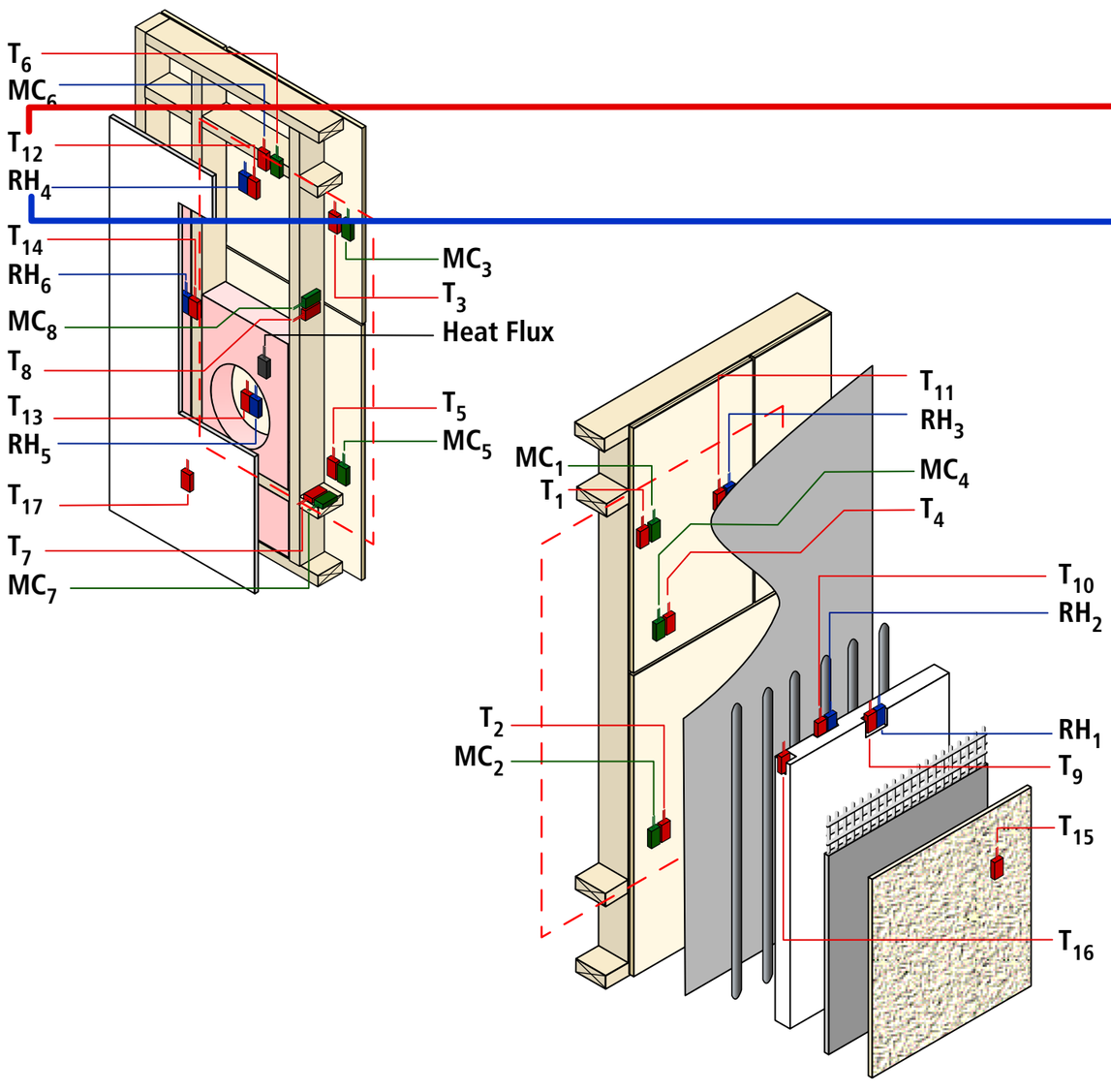
T_6
MC_6
T_{12}
RH_4
T_{14}
RH_6
MC_8
T_8
T_{13}
RH_5
T_{17}
T_7
MC_7
MC_3
T_3
Heat Flux
T_5
MC_5
MC_1
T_1
T_2
MC_2
T_{11}
RH_3
MC_4
T_4
T_{10}
RH_2
RH_1
T_9
T_{15}
T_{16}

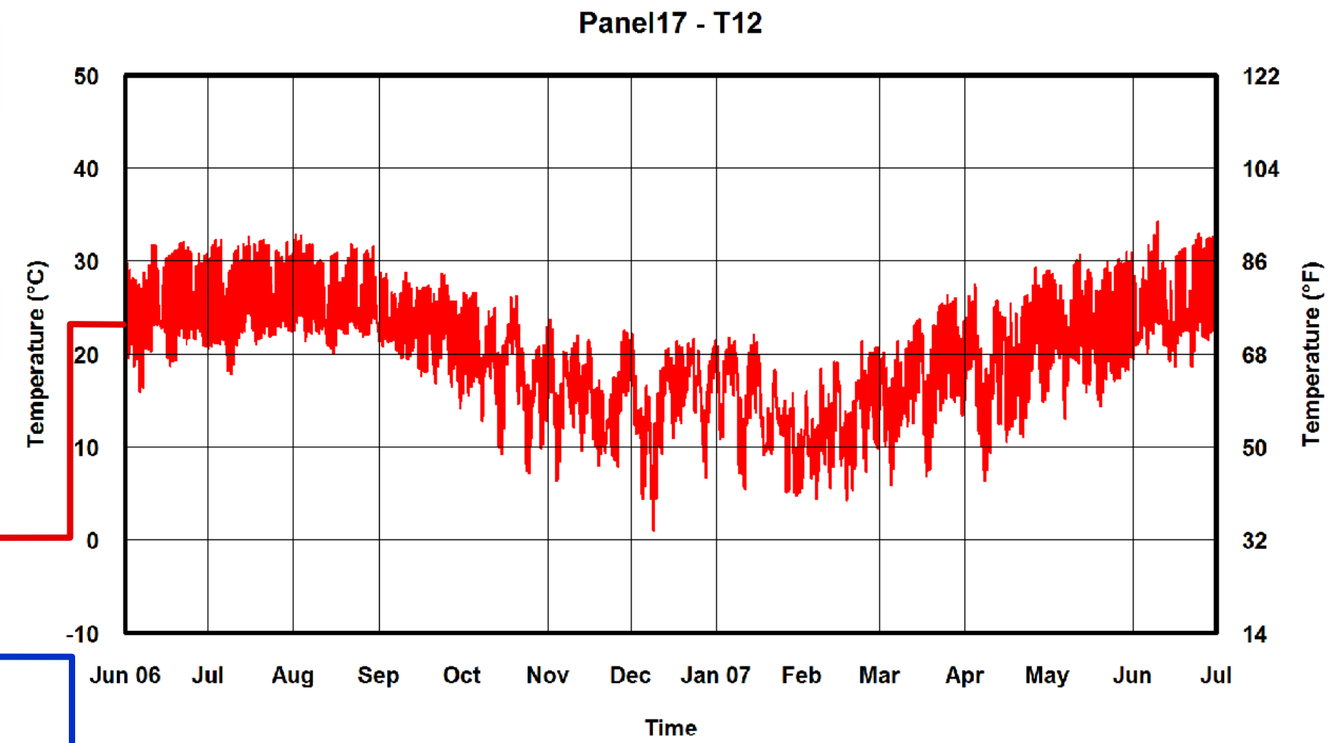
Panel17 - T12
Temperature (°C)
Temperature (°F)
50
40
30
20
10
0
-10
122
104
86
68
50
32
14
Jun 06
Jul
Aug
Sep
Oct
Nov
Dec
Jan 07
Feb
Mar
Apr
May
Jun
Jul
Time

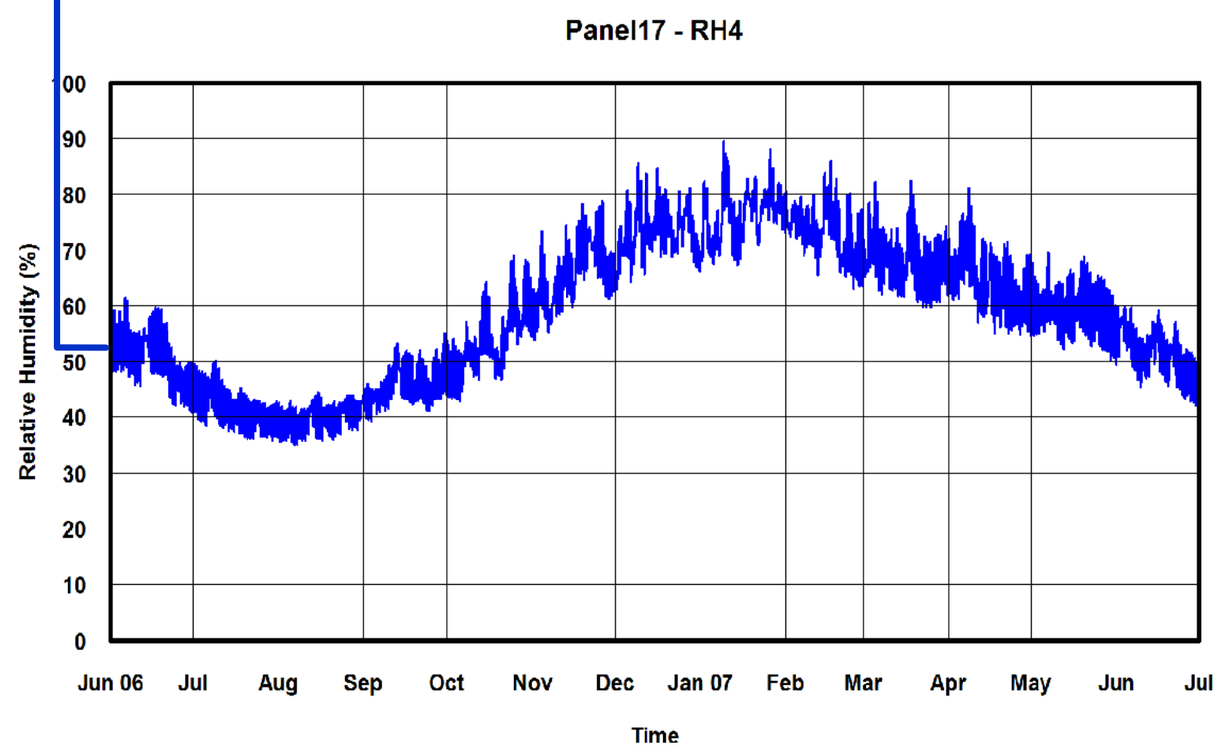
Panel17 - RH4
Relative Humidity (%)
100
90
80
70
60
50
40
30
20
10
0
Jun 06
Jul
Aug
Sep
Oct
Nov
Dec
Jan 07
Feb
Mar
Apr
May
Jun
Jul
Time

Panel 17

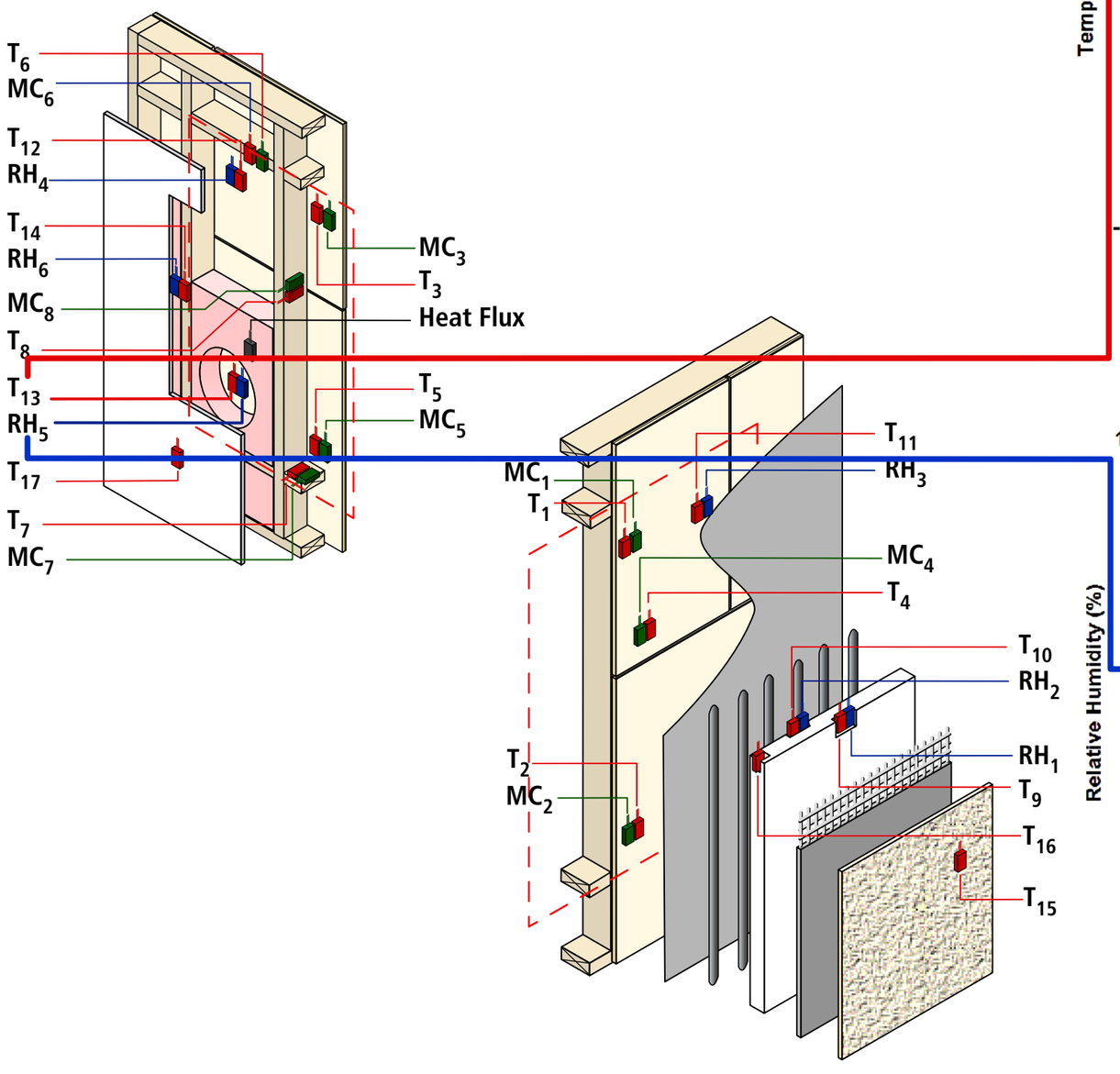
T_6
MC_6
T_{12}
RH_4
T_{14}
RH_6
MC_8
T_8
T_{13}
RH_5
T_{17}
T_7
MC_7
MC_3
T_3
Heat Flux
T_5
MC_5
T_{11}
RH_3
MC_1
T_1
MC_4
T_4
T_{10}
RH_2
RH_1
T_9
T_{16}
T_{15}
T_2
MC_2

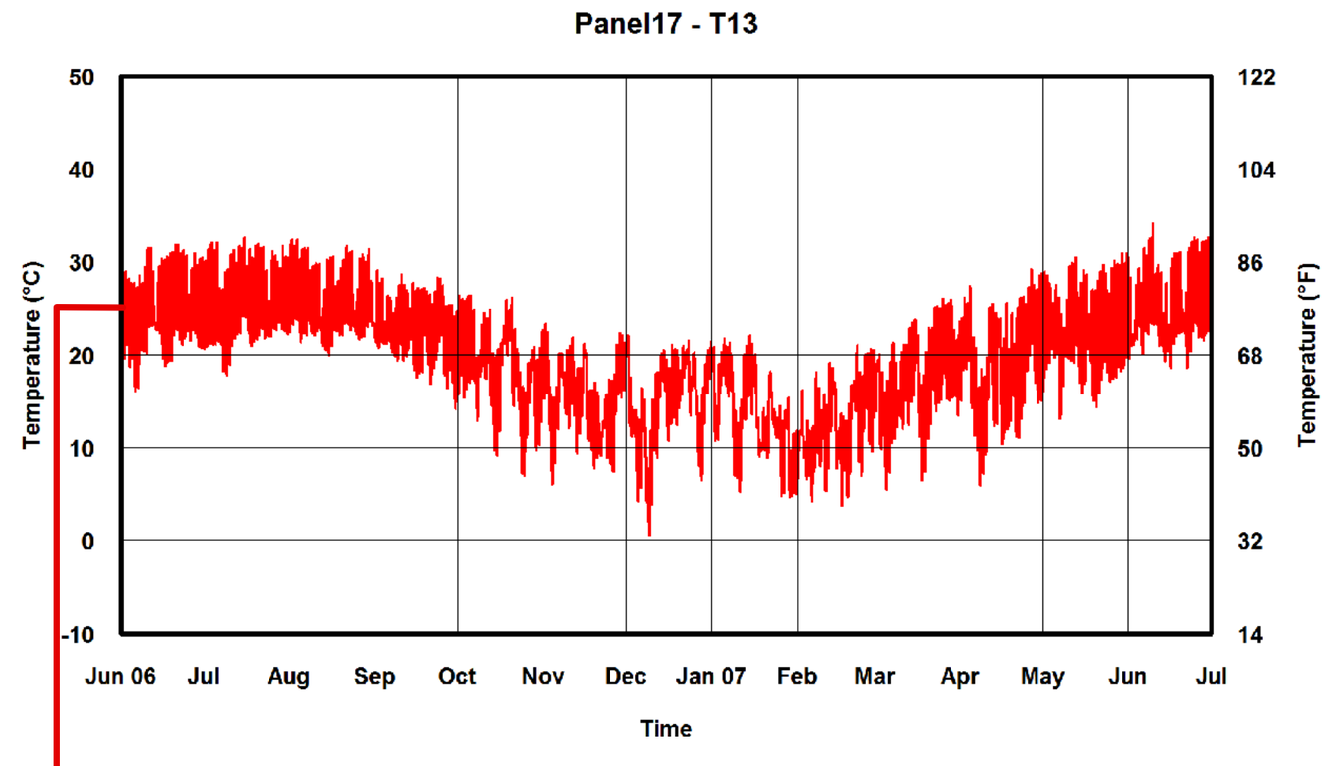
Panel17 - T13
Temperature (°C)
50
40
30
20
10
0
-10
Temperature (°F)
122
104
86
68
50
32
14
Jun 06
Jul
Aug
Sep
Oct
Nov
Dec
Jan 07
Feb
Mar
Apr
May
Jun
Jul
Time

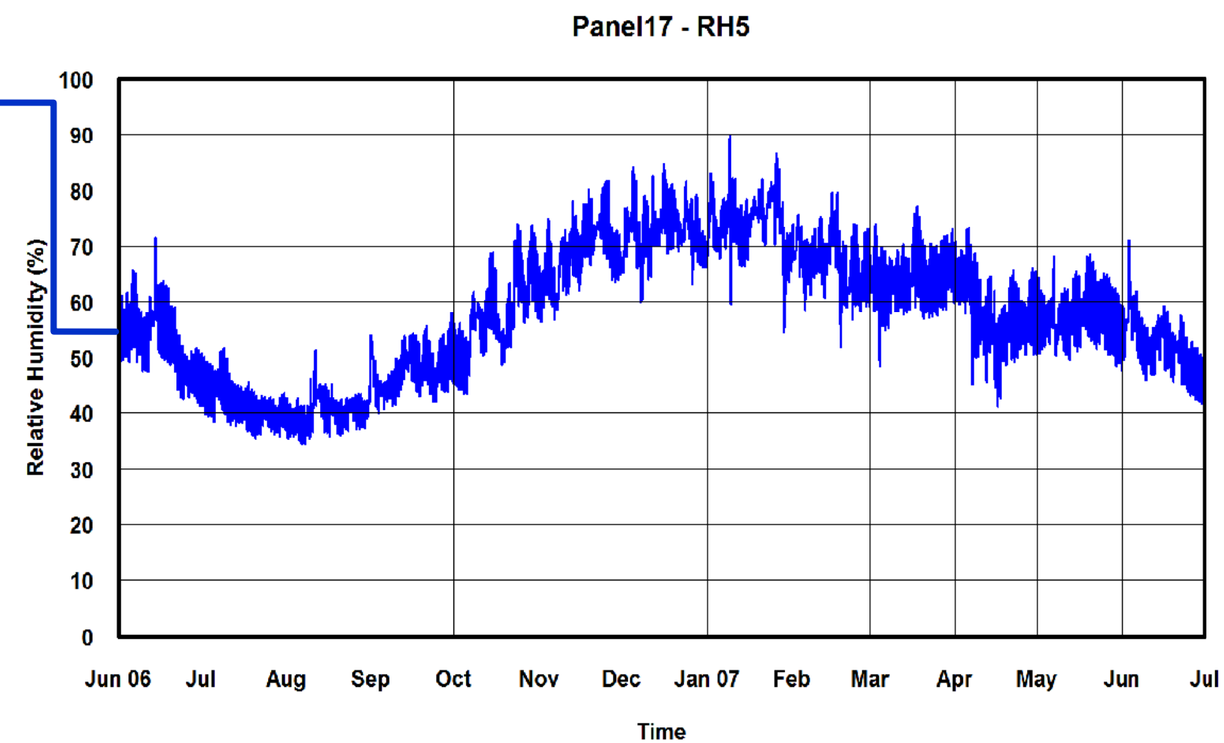
Panel17 - RH5
Relative Humidity (%)
100
90
80
70
60
50
40
30
20
10
0
Jun 06
Jul
Aug
Sep
Oct
Nov
Dec
Jan 07
Feb
Mar
Apr
May
Jun
Jul
Time

Panel 17

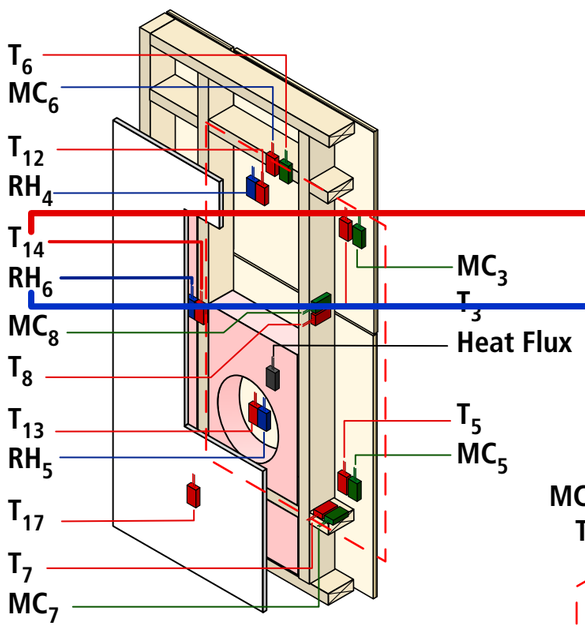
T_6
MC_6
T_{12}
RH_4
T_{14}
RH_6
MC_8
T_8
T_{13}
RH_5
T_{17}
T_7
MC_7
MC_3
T_3
Heat Flux
T_5
MC_5

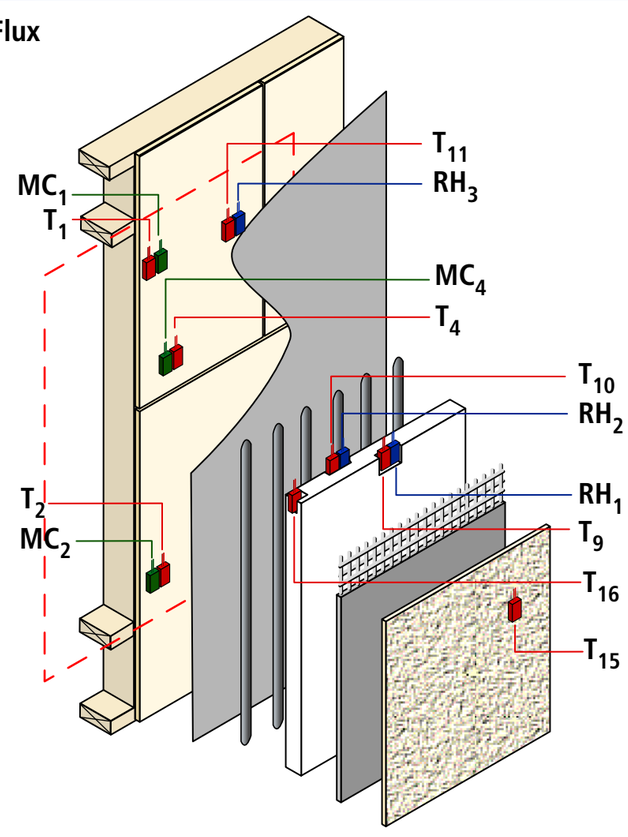
MC_1
T_1
T_2
MC_2
T_{11}
RH_3
MC_4
T_4
T_{10}
RH_2
RH_1
T_9
T_{16}
T_{15}

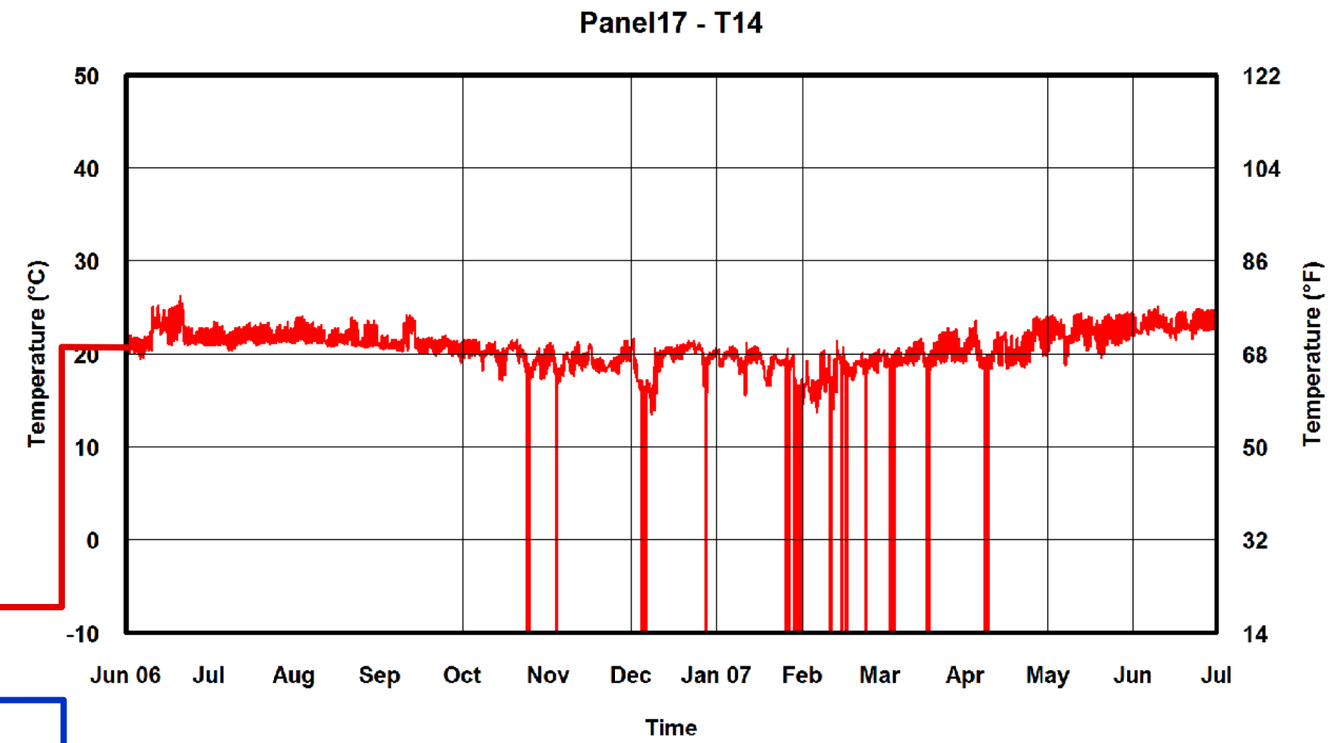
Panel17 - T14
Temperature (°C)
Temperature (°F)
50
40
30
20
10
0
-10
122
104
86
68
50
32
14
Jun 06
Jul
Aug
Sep
Oct
Nov
Dec
Jan 07
Feb
Mar
Apr
May
Jun
Jul
Time

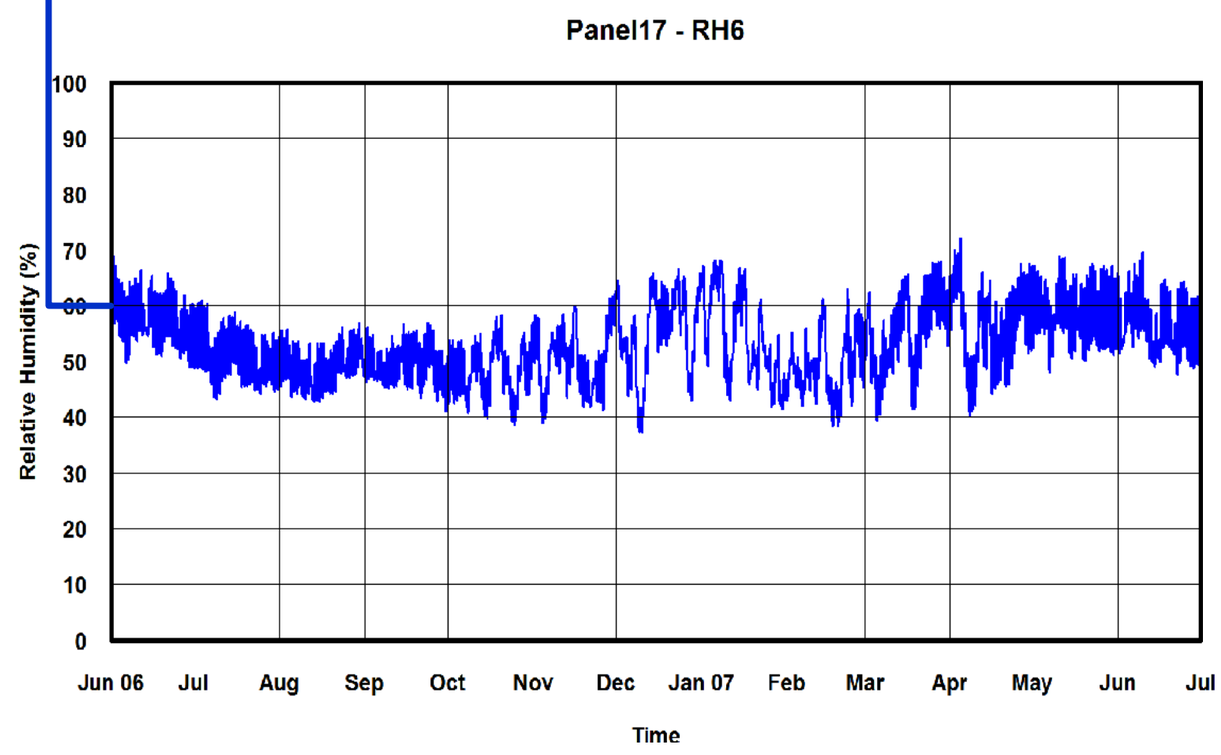
Panel17 - RH6
Relative Humidity (%)
100
90
80
70
60
50
40
30
20
10
0
Jun 06
Jul
Aug
Sep
Oct
Nov
Dec
Jan 07
Feb
Mar
Apr
May
Jun
Jul
Time

Panel 17

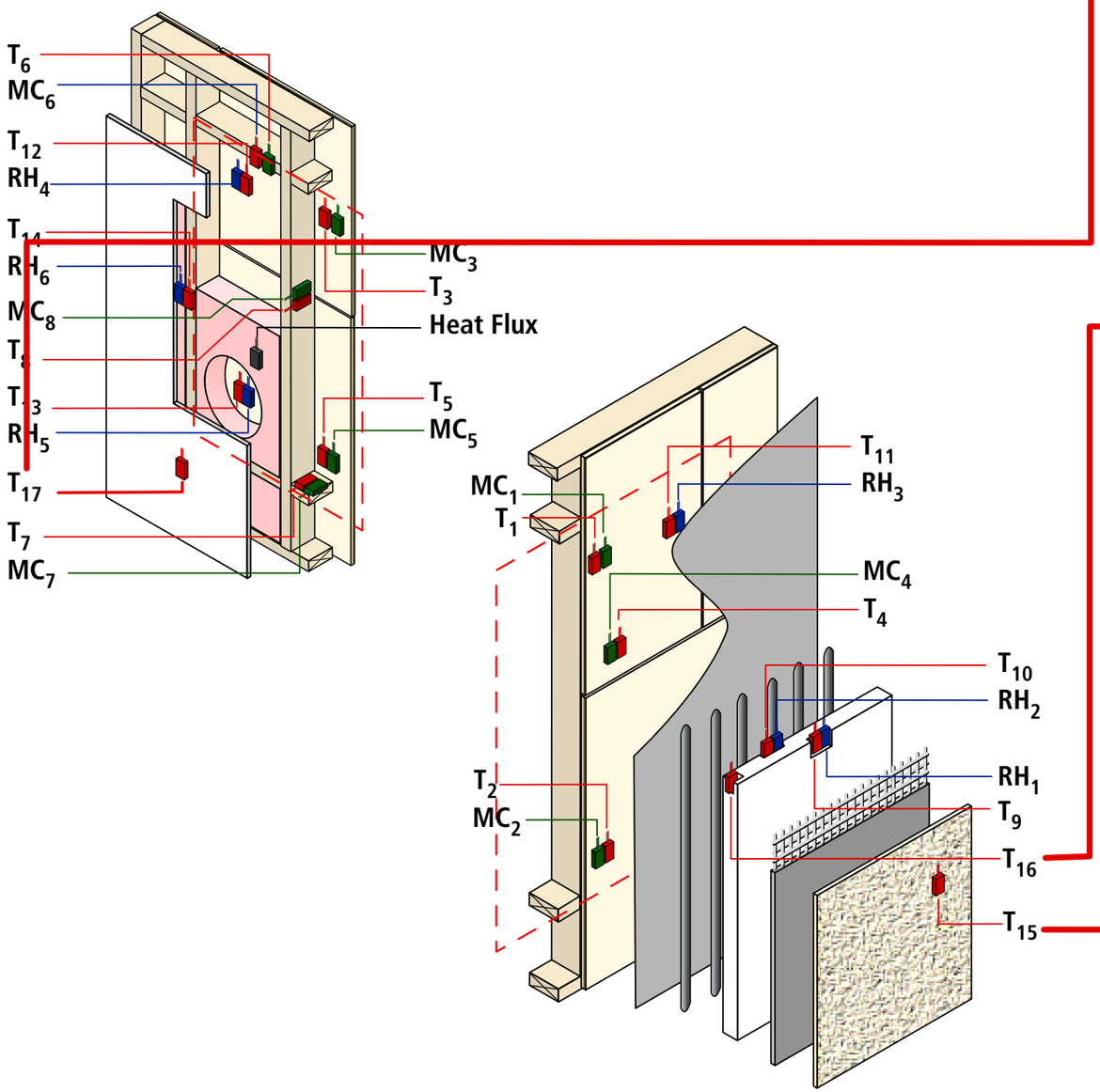
T_6
MC_6
T_{12}
RH_4
T_{14}
RH_6
MC_8
T_8
T_{13}
RH_5
T_{17}
T_7
MC_7
MC_3
T_3
Heat Flux
T_5
MC_5
MC_1
T_1
T_{11}
RH_3
MC_4
T_4
T_{10}
RH_2
RH_1
T_9
T_2
MC_2
T_{16}
T_{15}

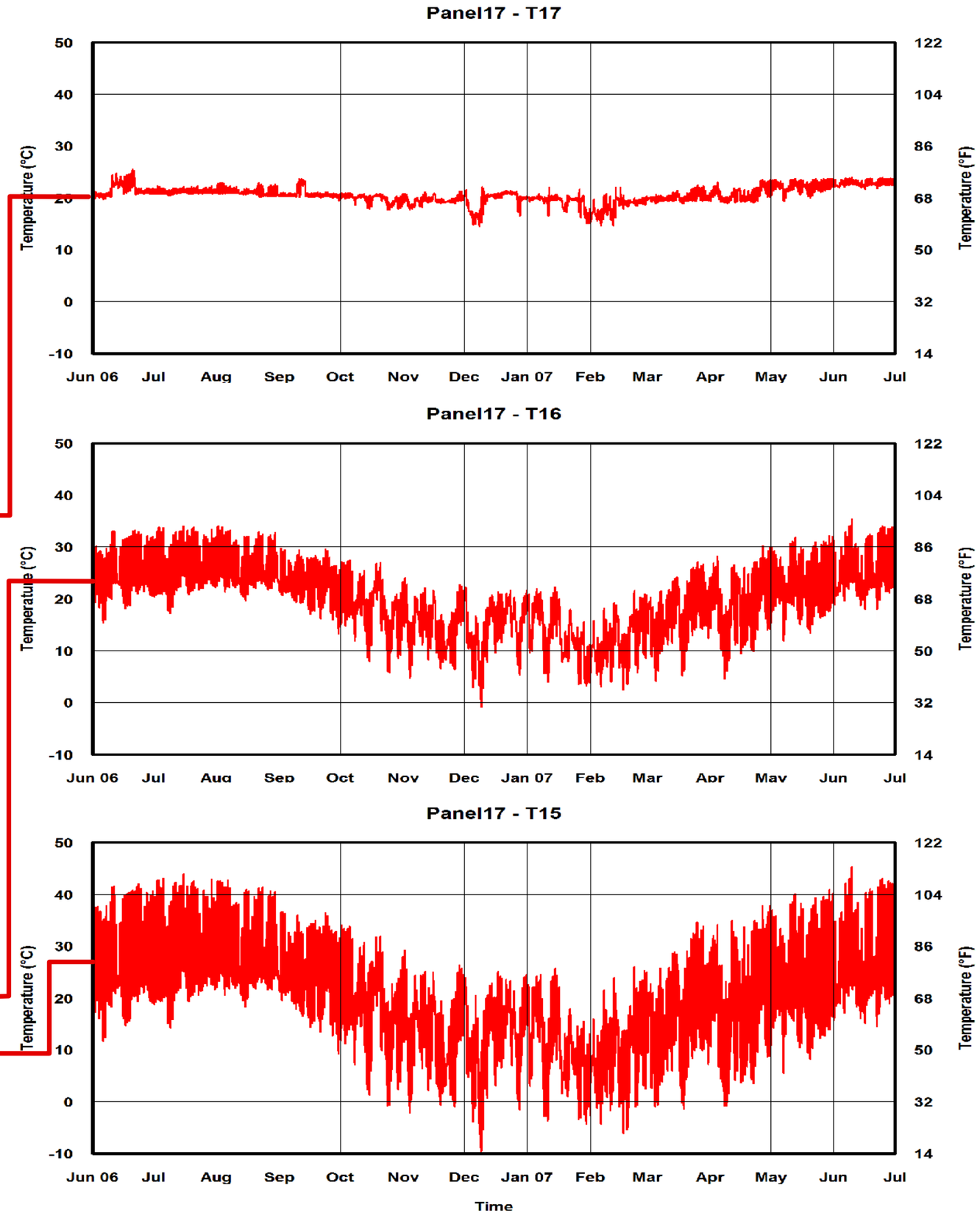
Panel17 - T17
Panel17 - T16
Panel17 - T15
Temperature (°C)
Temperature (°F)
50
40
30
20
10
0
-10
122
104
86
68
50
32
14
Jun 06
Jul
Aug
Sep
Oct
Nov
Dec
Jan 07
Feb
Mar
Apr
May
Jun
Jul
Time

Panel 18

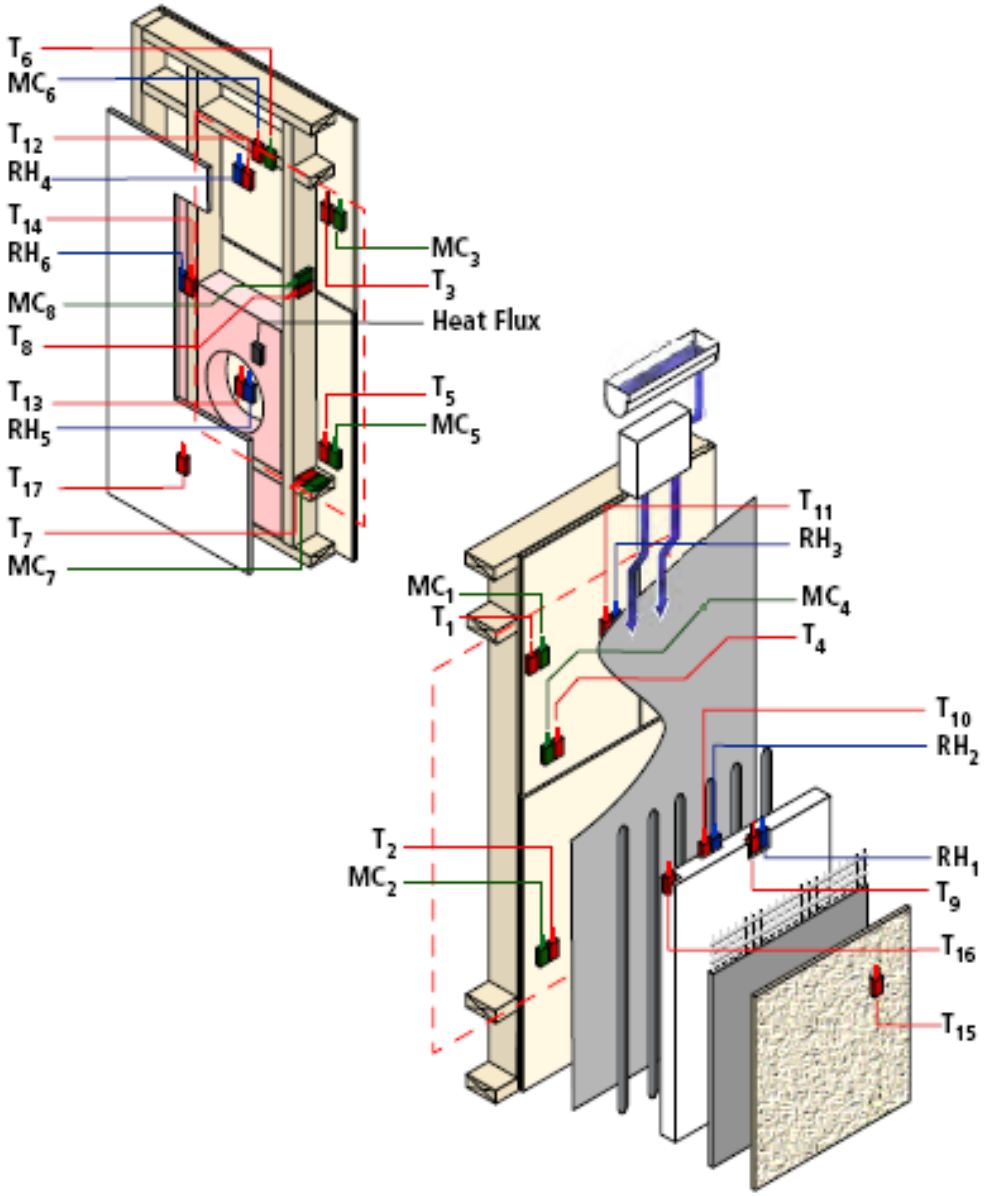
T_6
MC_6
T_{12}
RH_4
T_{14}
RH_6
MC_8
T_8
T_{13}
RH_5
T_{17}
T_7
MC_7
MC_3
T_3
Heat Flux
T_5
MC_5
T_{11}
RH_3
MC_1
T_1
MC_4
T_4
T_{10}
RH_2
T_2
MC_2
RH_1
T_9
T_{16}
T_{15}

Panel 18

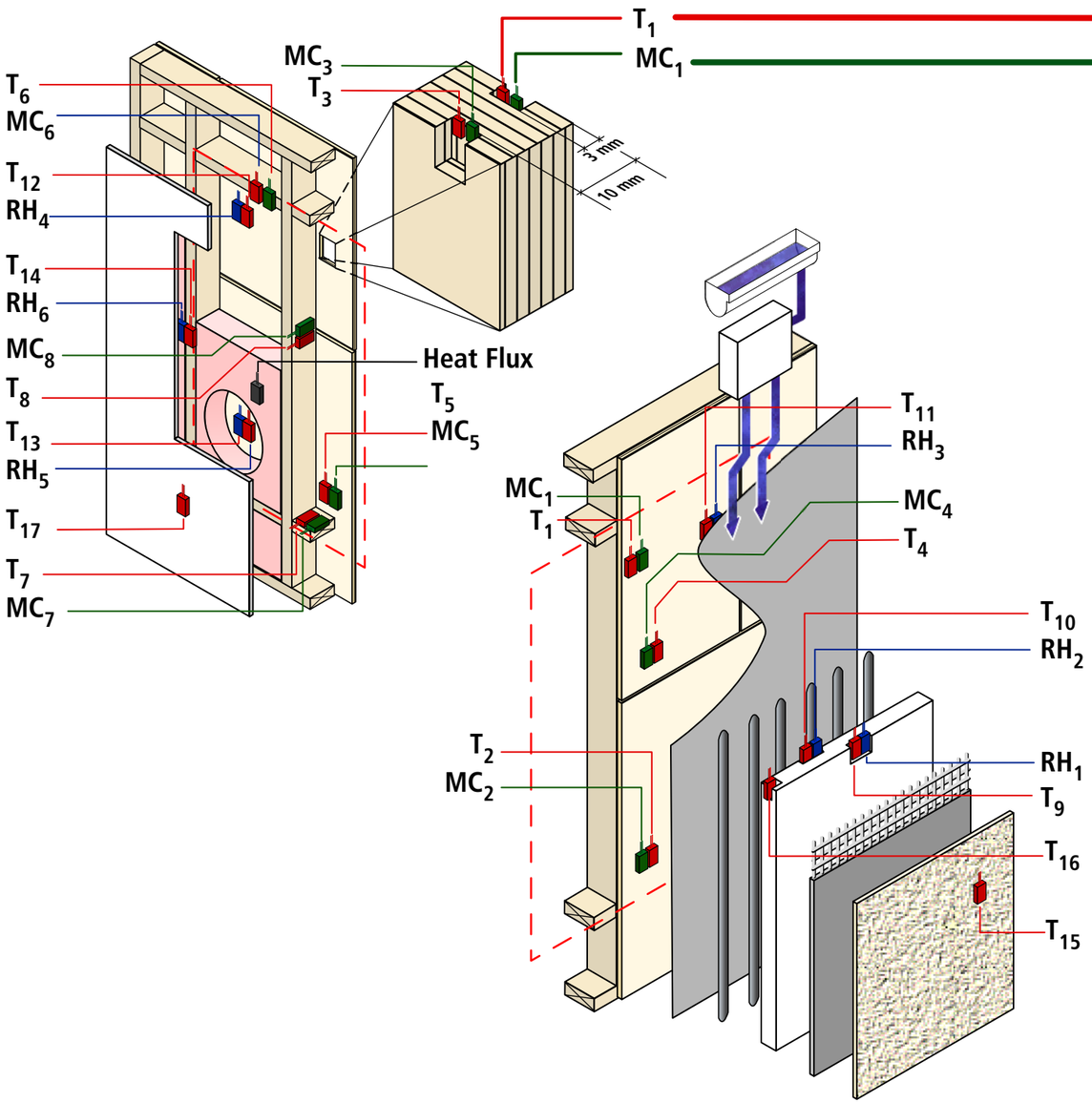
T1
MC1
MC3
T3
T6
MC6
T12
RH4
T14
RH6
MC8
T8
T13
RH5
T17
T7
MC7
3 mm
10 mm
Heat Flux
T5
MC5
T11
RH3
MC4
T4
T10
RH2
RH1
T9
T16
T15
MC1
T1
T2
MC2

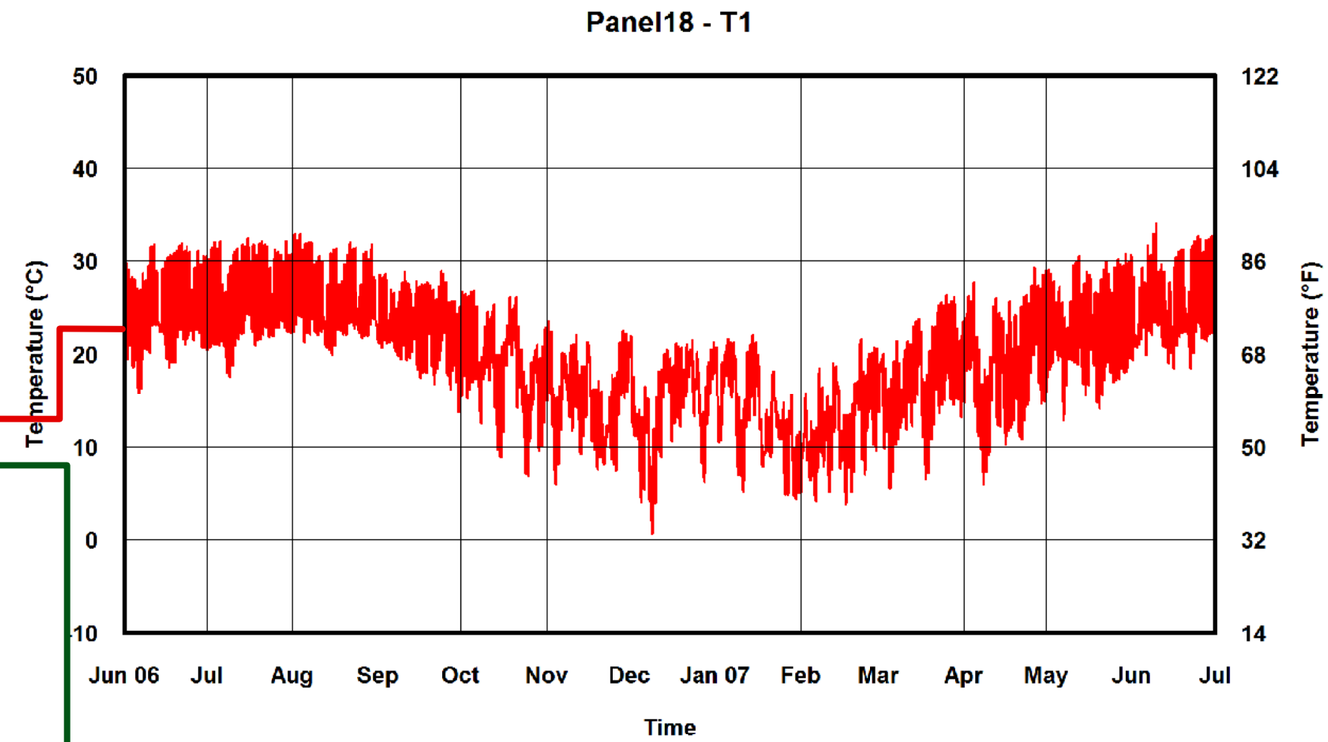
Panel18 - T1
Temperature (°C)
Temperature (°F)
50
40
30
20
10
0
-10
122
104
86
68
50
32
14
Jun 06
Jul
Aug
Sep
Oct
Nov
Dec
Jan 07
Feb
Mar
Apr
May
Jun
Jul
Time

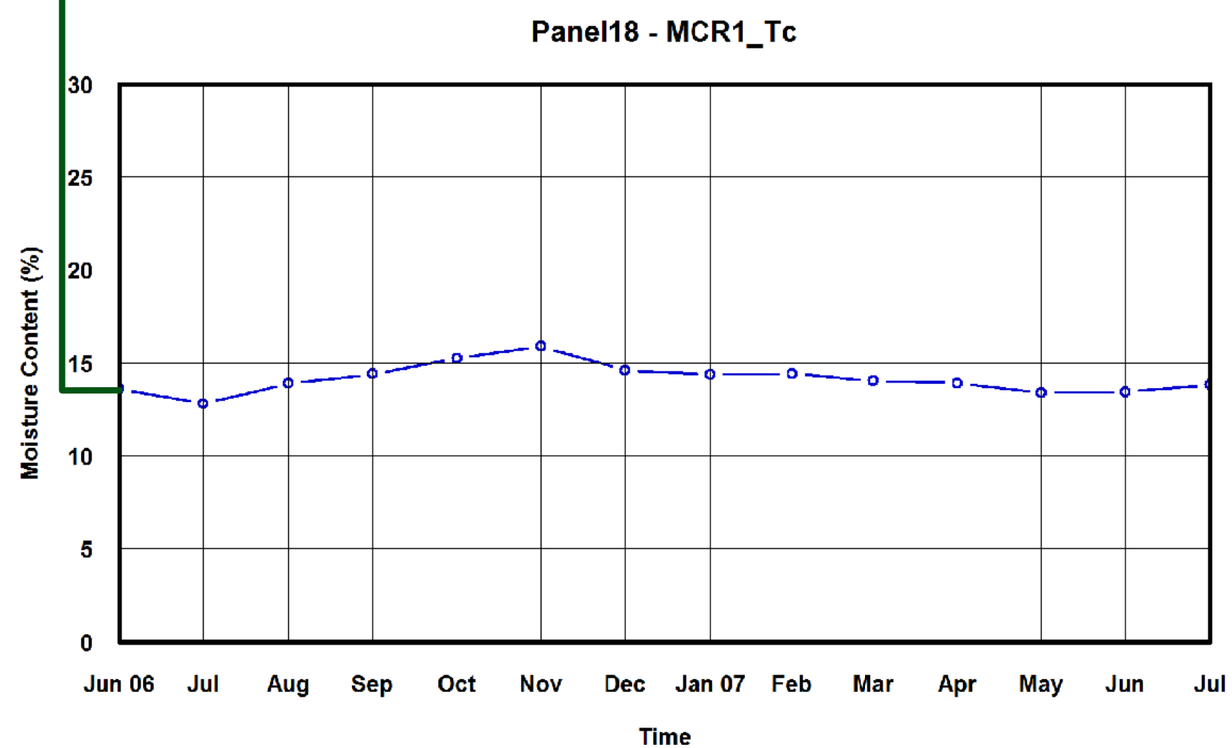
Panel18 - MCR1_Tc
Moisture Content (%)
30
25
20
15
10
5
0
Jun 06
Jul
Aug
Sep
Oct
Nov
Dec
Jan 07
Feb
Mar
Apr
May
Jun
Jul
Time

Panel 18

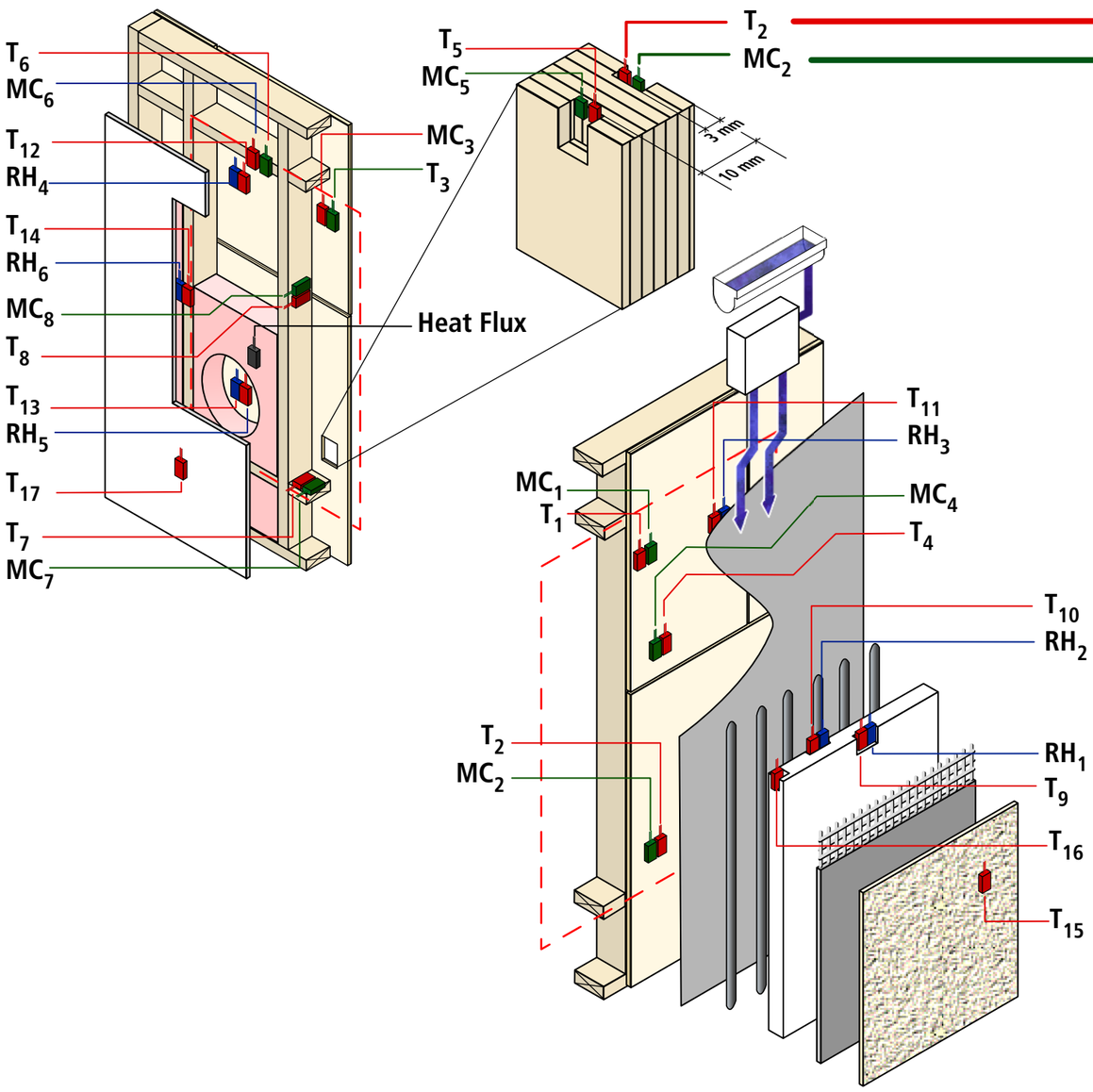
T_6
MC_6
T_{12}
RH_4
T_{14}
RH_6
MC_8
T_8
T_{13}
RH_5
T_{17}
T_7
MC_7
T_5
MC_5
T_2
MC_2
MC_3
T_3
3 mm
10 mm
Heat Flux
T_{11}
RH_3
MC_1
T_1
MC_4
T_4
T_{10}
RH_2
T_2
MC_2
RH_1
T_9
T_{16}
T_{15}

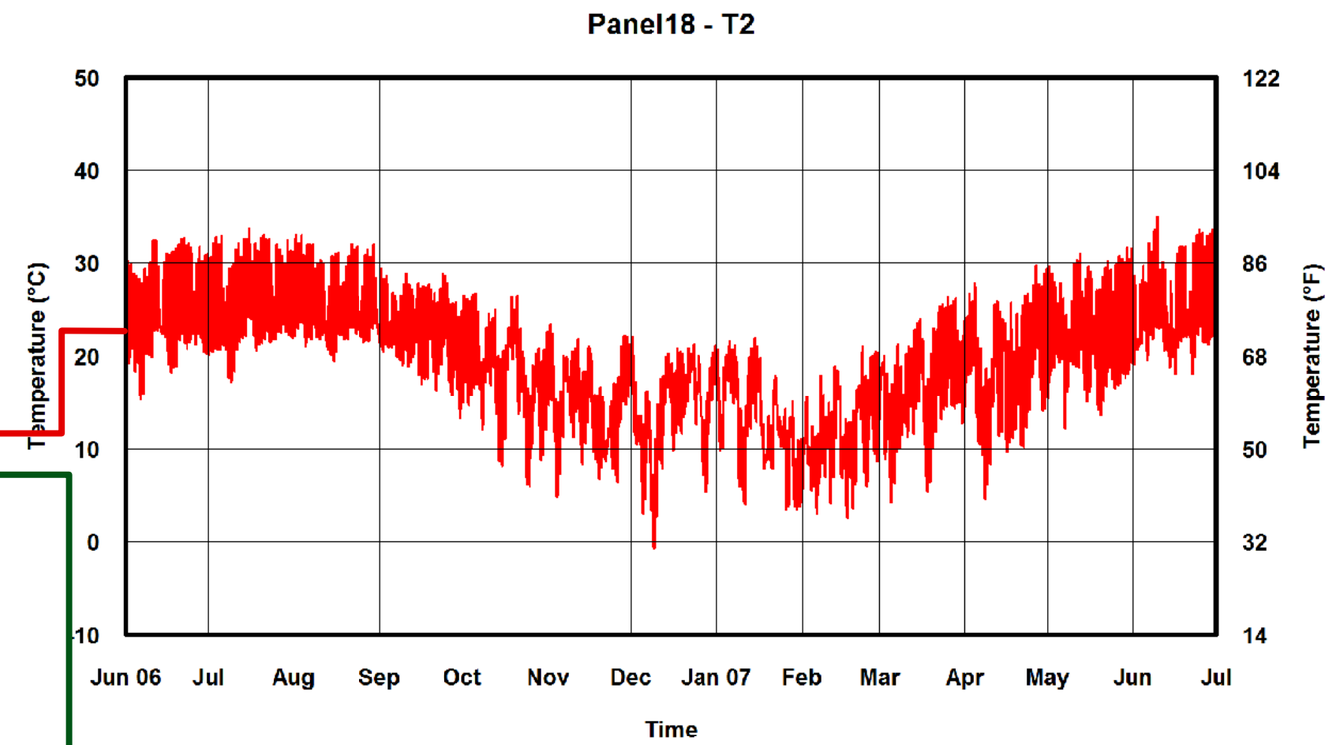
Panel18 - T2
Temperature (°C)
Temperature (°F)
50
40
30
20
10
0
-10
122
104
86
68
50
32
14
Jun 06
Jul
Aug
Sep
Oct
Nov
Dec
Jan 07
Feb
Mar
Apr
May
Jun
Jul
Time

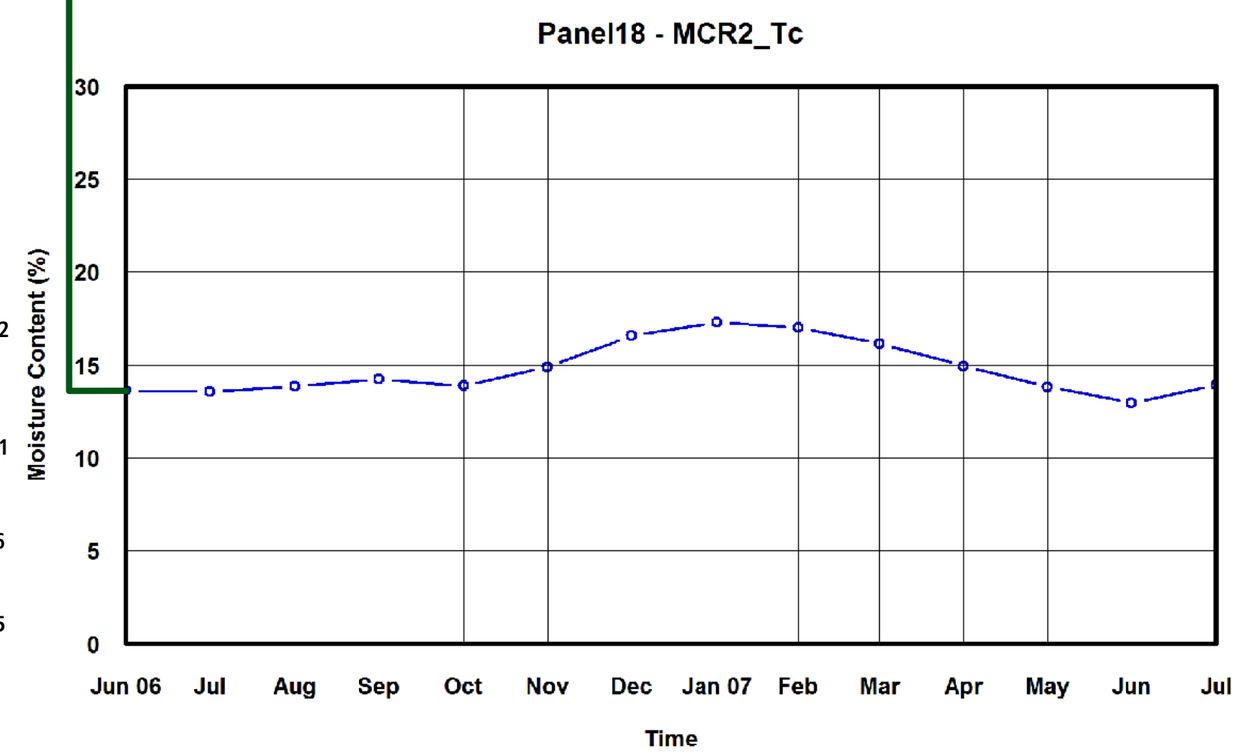
Panel18 - MCR2_Tc
Moisture Content (%)
30
25
20
15
10
5
0
Jun 06
Jul
Aug
Sep
Oct
Nov
Dec
Jan 07
Feb
Mar
Apr
May
Jun
Jul
Time

Panel 18

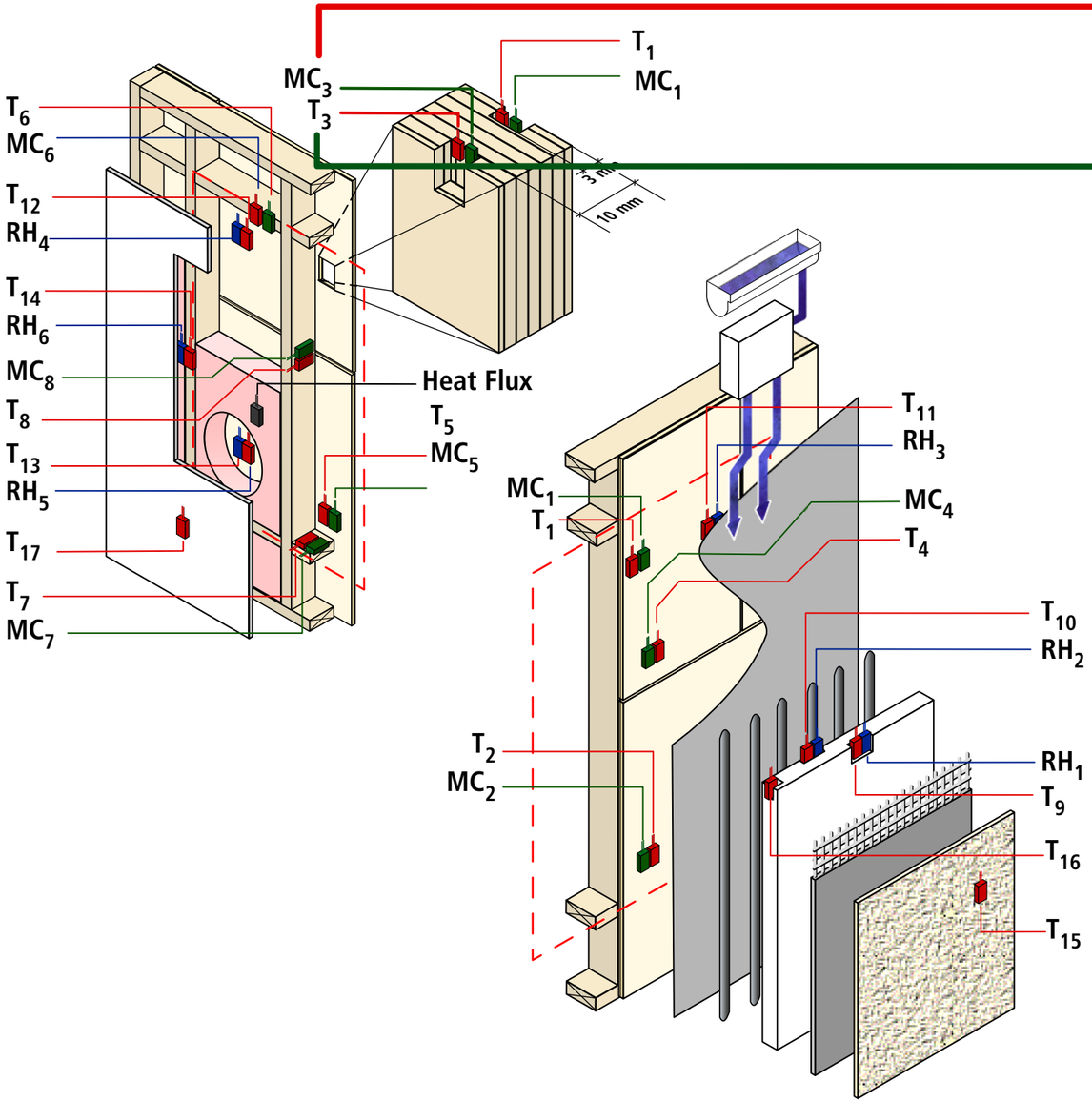
T_6
MC_6
T_{12}
RH_4
T_{14}
RH_6
MC_8
T_8
T_{13}
RH_5
T_{17}
T_7
MC_7
MC_3
T_3
T_1
MC_1
3 mm
10 mm
Heat Flux
T_5
MC_5
MC_1
T_1
T_{11}
RH_3
MC_4
T_4
T_{10}
RH_2
T_2
MC_2
RH_1
T_9
T_{16}
T_{15}

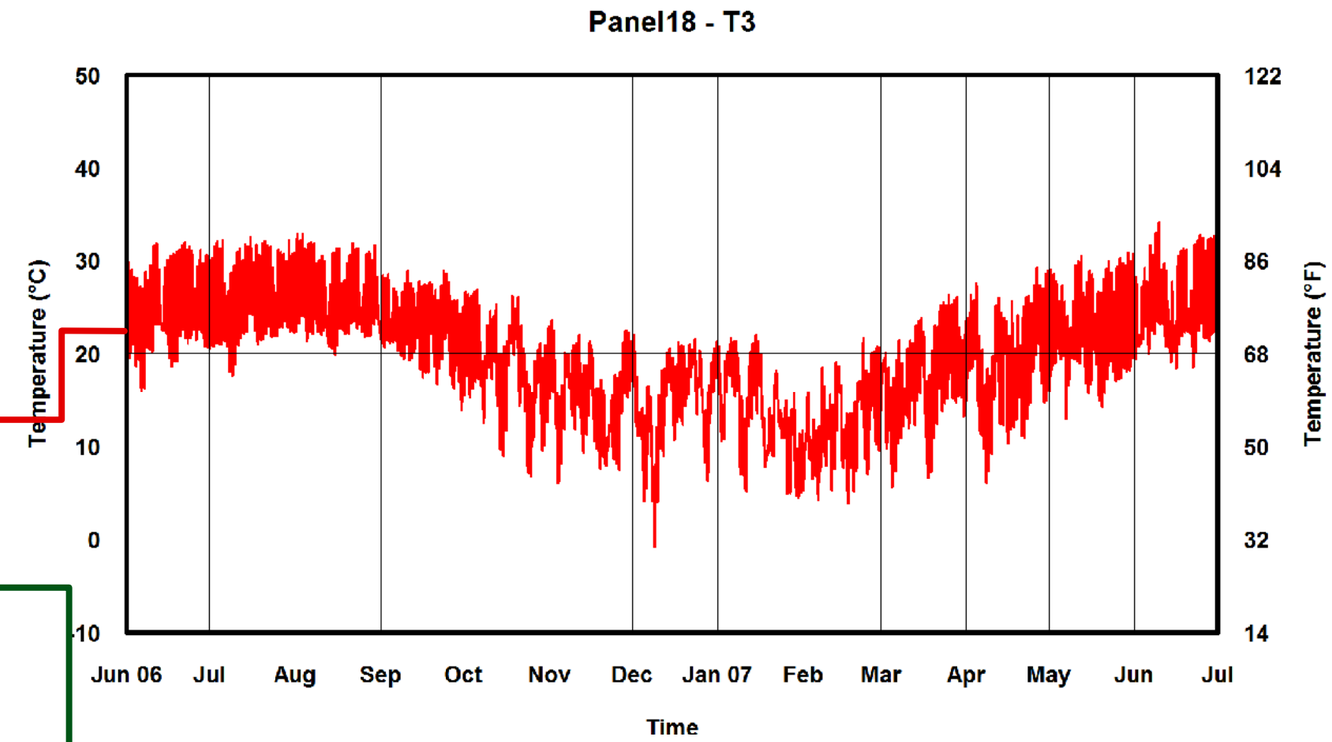
Panel18 - T3
Temperature (°C)
Temperature (°F)
50
40
30
20
10
0
-10
122
104
86
68
50
32
14
Jun 06
Jul
Aug
Sep
Oct
Nov
Dec
Jan 07
Feb
Mar
Apr
May
Jun
Jul
Time

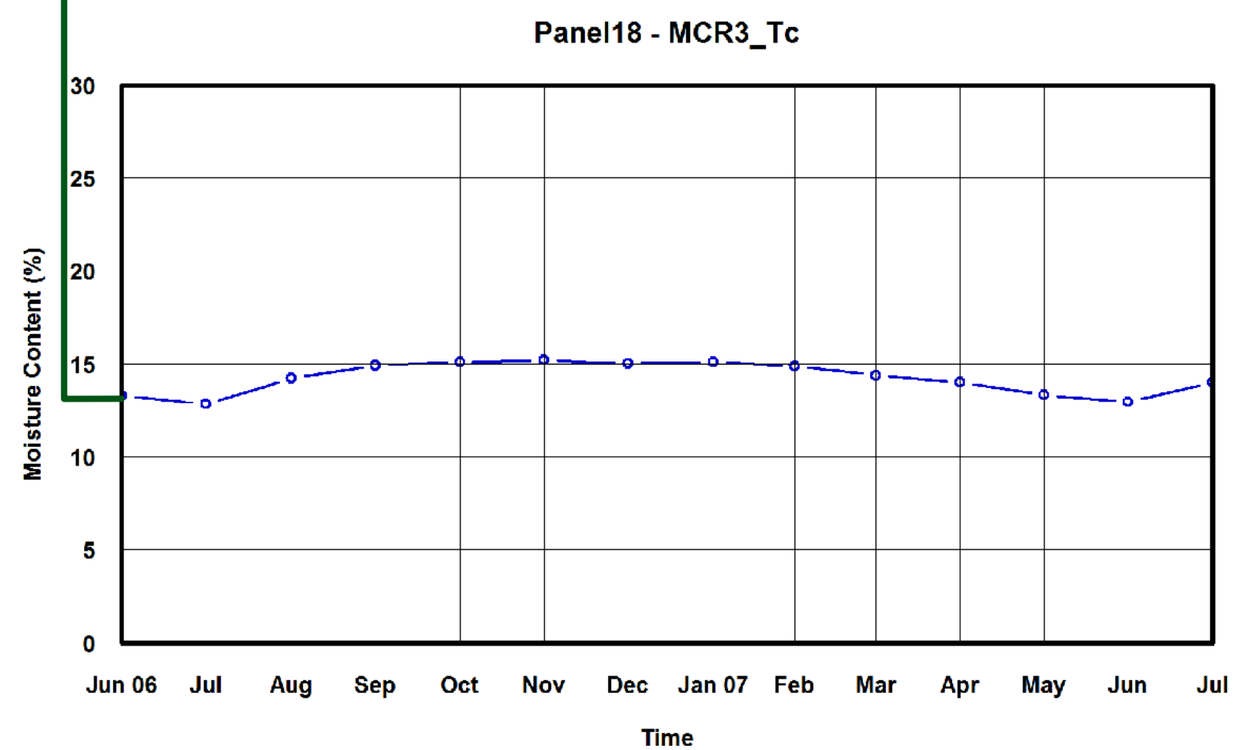
Panel18 - MCR3_Tc
Moisture Content (%)
30
25
20
15
10
5
0
Jun 06
Jul
Aug
Sep
Oct
Nov
Dec
Jan 07
Feb
Mar
Apr
May
Jun
Jul
Time

Panel 18

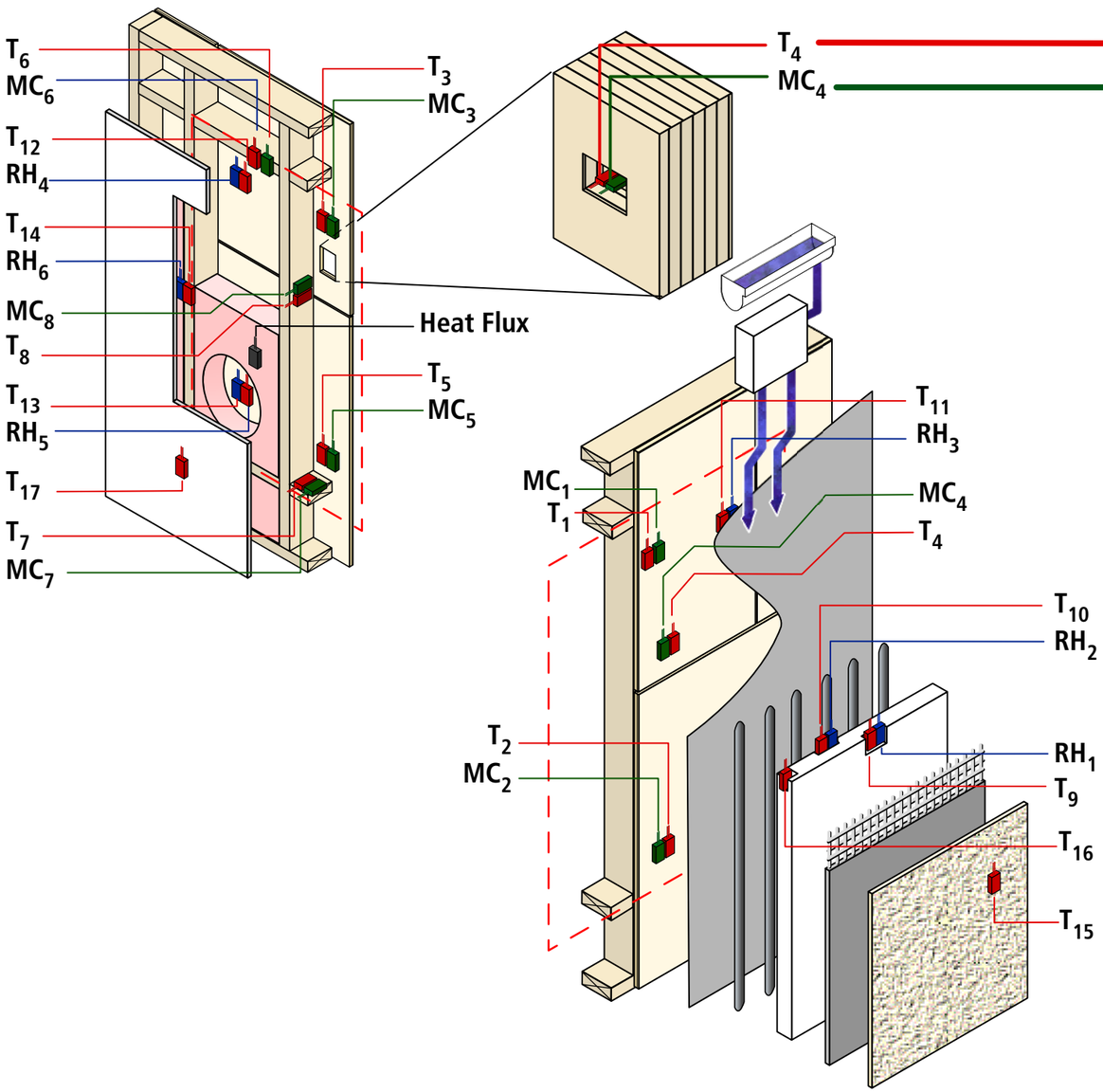
T_6
MC_6
T_{12}
RH_4
T_{14}
RH_6
MC_8
T_8
T_{13}
RH_5
T_{17}
T_7
MC_7
T_3
MC_3
Heat Flux
T_5
MC_5
T_4
MC_4
T_{11}
RH_3
MC_1
T_1
MC_4
T_4
T_{10}
RH_2
T_2
MC_2
RH_1
T_9
T_{16}
T_{15}

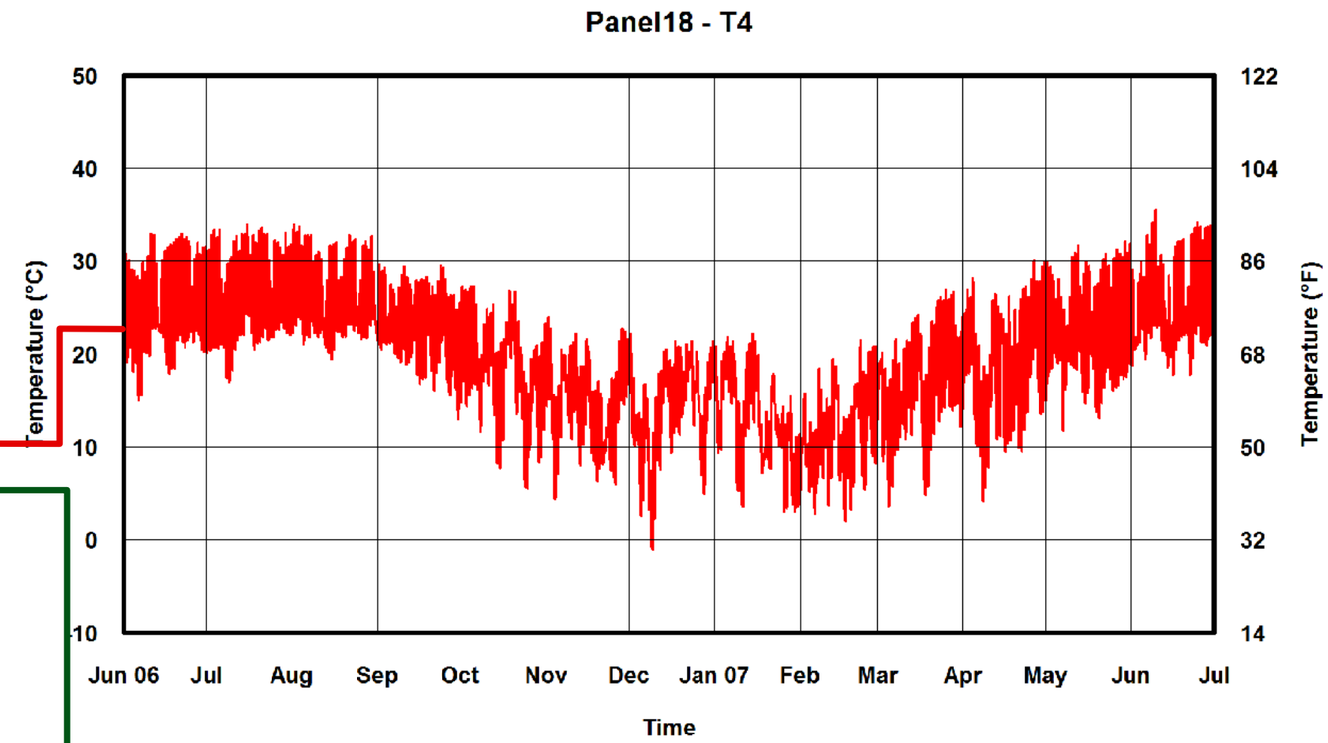
Panel18 - T4
Temperature (°C)
Temperature (°F)
50
40
30
20
10
0
-10
122
104
86
68
50
32
14
Jun 06
Jul
Aug
Sep
Oct
Nov
Dec
Jan 07
Feb
Mar
Apr
May
Jun
Jul
Time

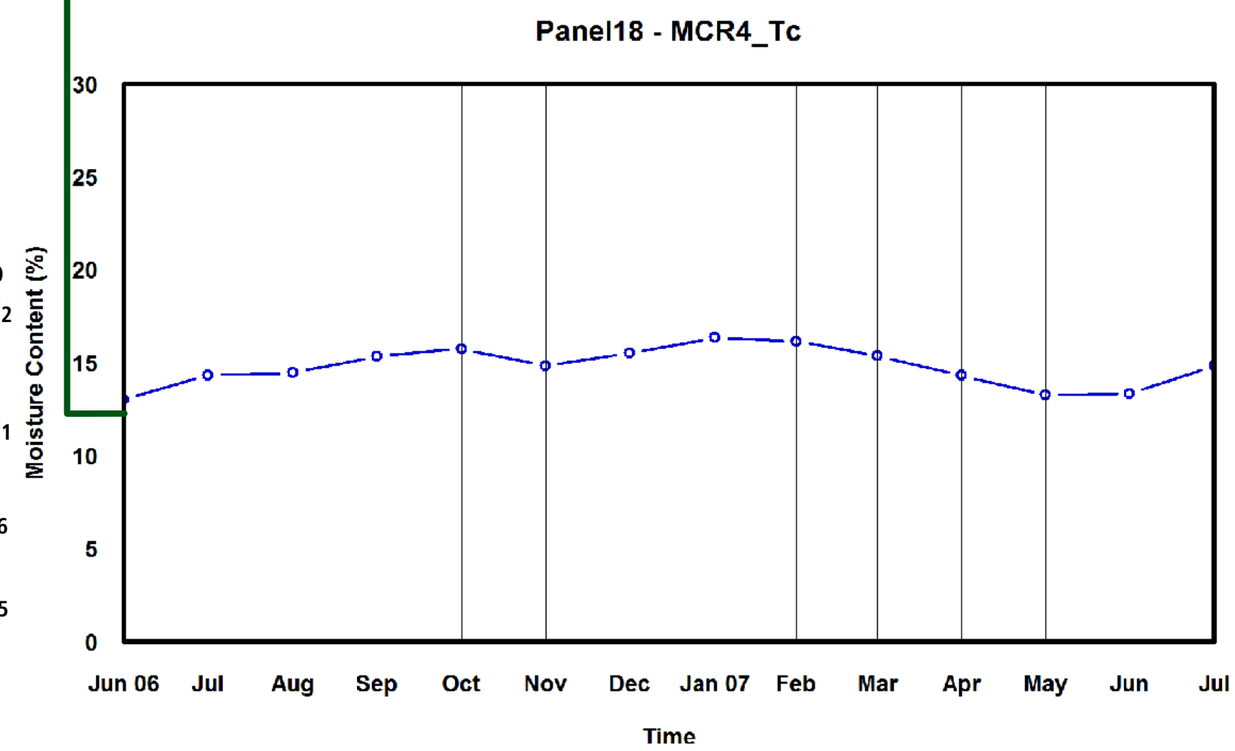
Panel18 - MCR4_Tc
Moisture Content (%)
30
25
20
15
10
5
0
Jun 06
Jul
Aug
Sep
Oct
Nov
Dec
Jan 07
Feb
Mar
Apr
May
Jun
Jul
Time

Panel 18

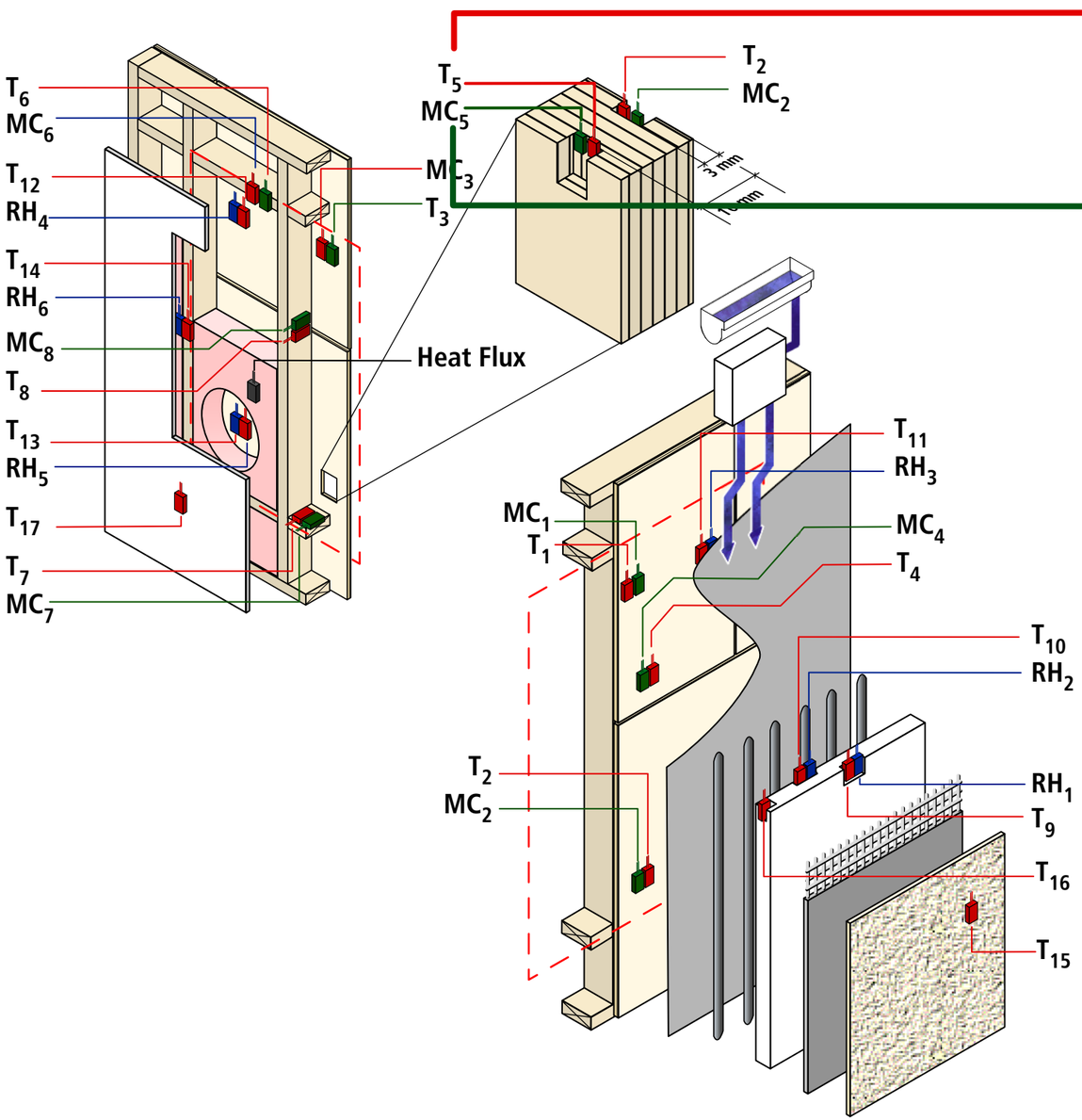
T_6
MC_6
T_{12}
RH_4
T_{14}
RH_6
MC_8
T_8
T_{13}
RH_5
T_{17}
T_7
MC_7
T_5
MC_5
MC_3
T_3
T_2
MC_2
3 mm
76mm
Heat Flux
T_{11}
RH_3
MC_1
T_1
MC_4
T_4
T_{10}
RH_2
T_2
MC_2
RH_1
T_9
T_{16}
T_{15}

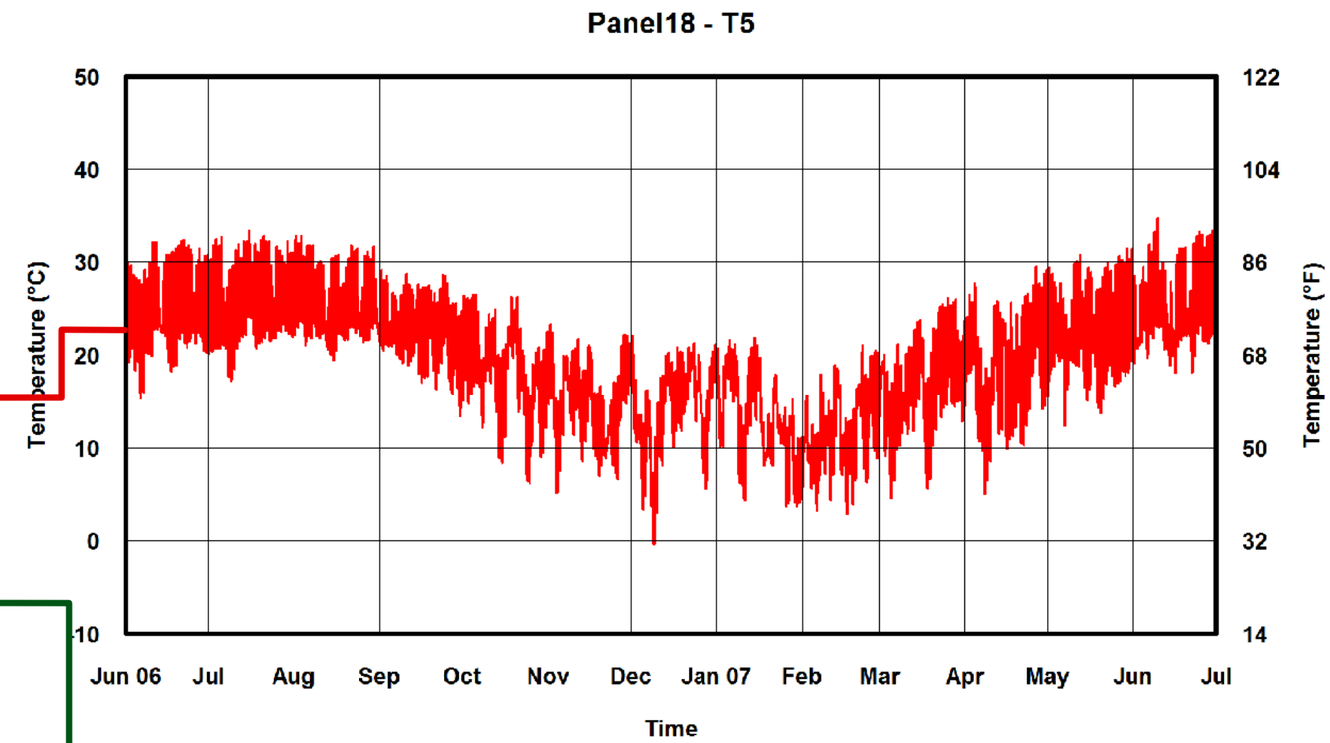
Panel18 - T5
Temperature (°C)
Temperature (°F)
50
40
30
20
10
0
-10
122
104
86
68
50
32
14
Jun 06
Jul
Aug
Sep
Oct
Nov
Dec
Jan 07
Feb
Mar
Apr
May
Jun
Jul
Time

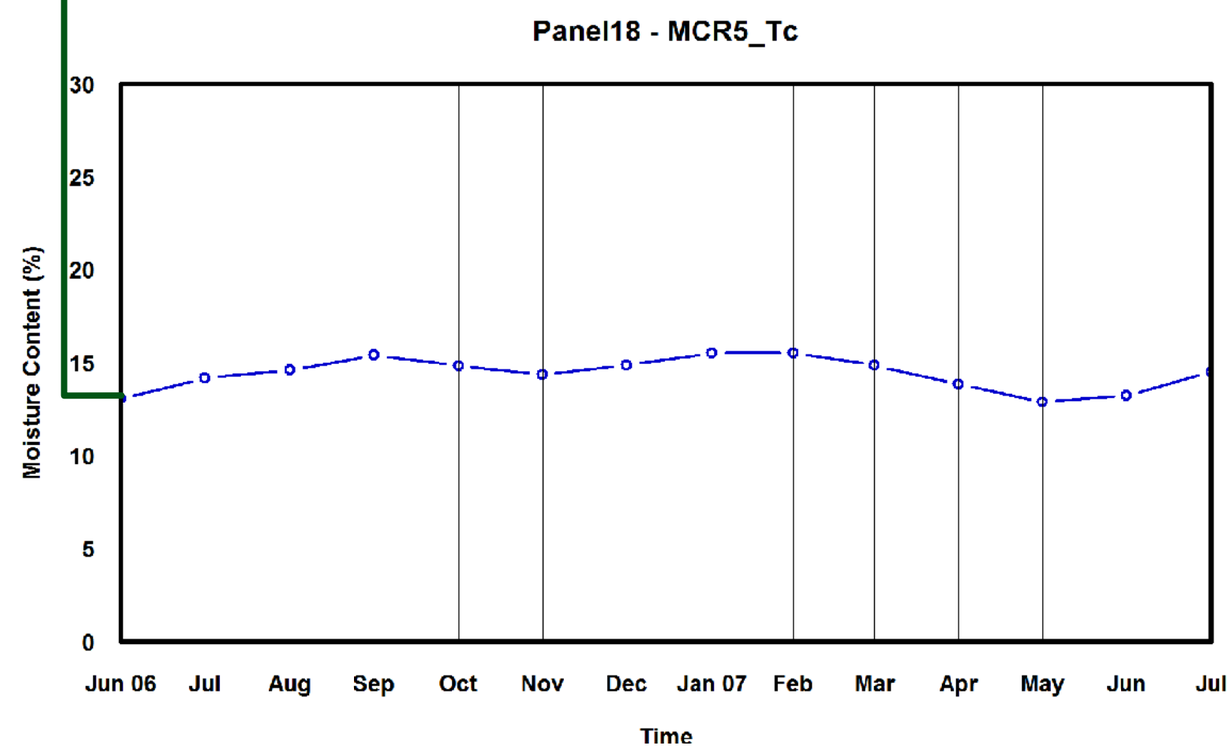
Panel18 - MCR5_Tc
Moisture Content (%)
30
25
20
15
10
5
0
Jun 06
Jul
Aug
Sep
Oct
Nov
Dec
Jan 07
Feb
Mar
Apr
May
Jun
Jul
Time

Panel 18

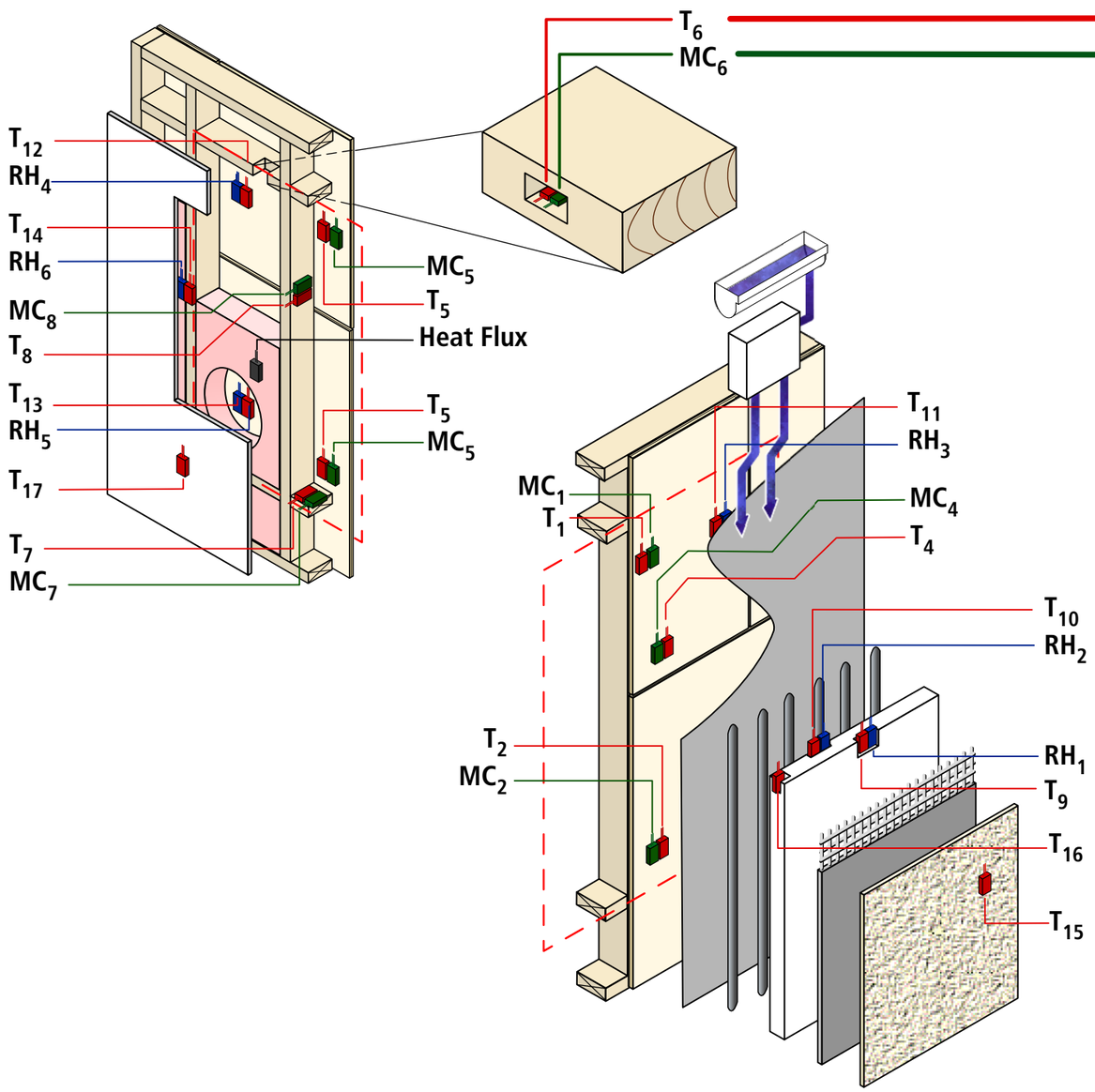
T_6
MC_6
T_{12}
RH_4
T_{14}
RH_6
MC_8
T_8
T_{13}
RH_5
T_{17}
T_7
MC_7
MC_5
T_5
Heat Flux
T_5
MC_5
T_{11}
RH_3
MC_1
T_1
MC_4
T_4
T_{10}
RH_2
T_2
MC_2
RH_1
T_9
T_{16}
T_{15}

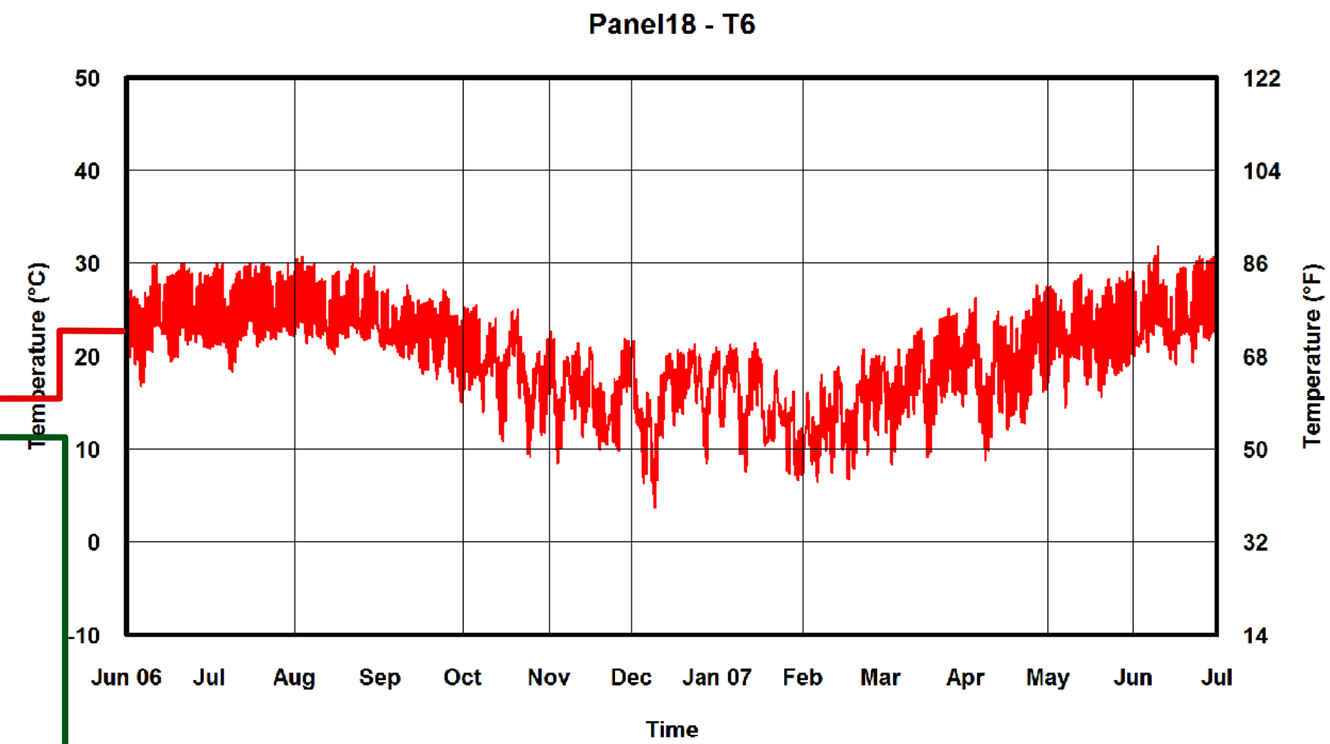
Panel18 - T6
Temperature (°C)
Temperature (°F)
50
40
30
20
10
0
-10
122
104
86
68
50
32
14
Jun 06
Jul
Aug
Sep
Oct
Nov
Dec
Jan 07
Feb
Mar
Apr
May
Jun
Jul
Time

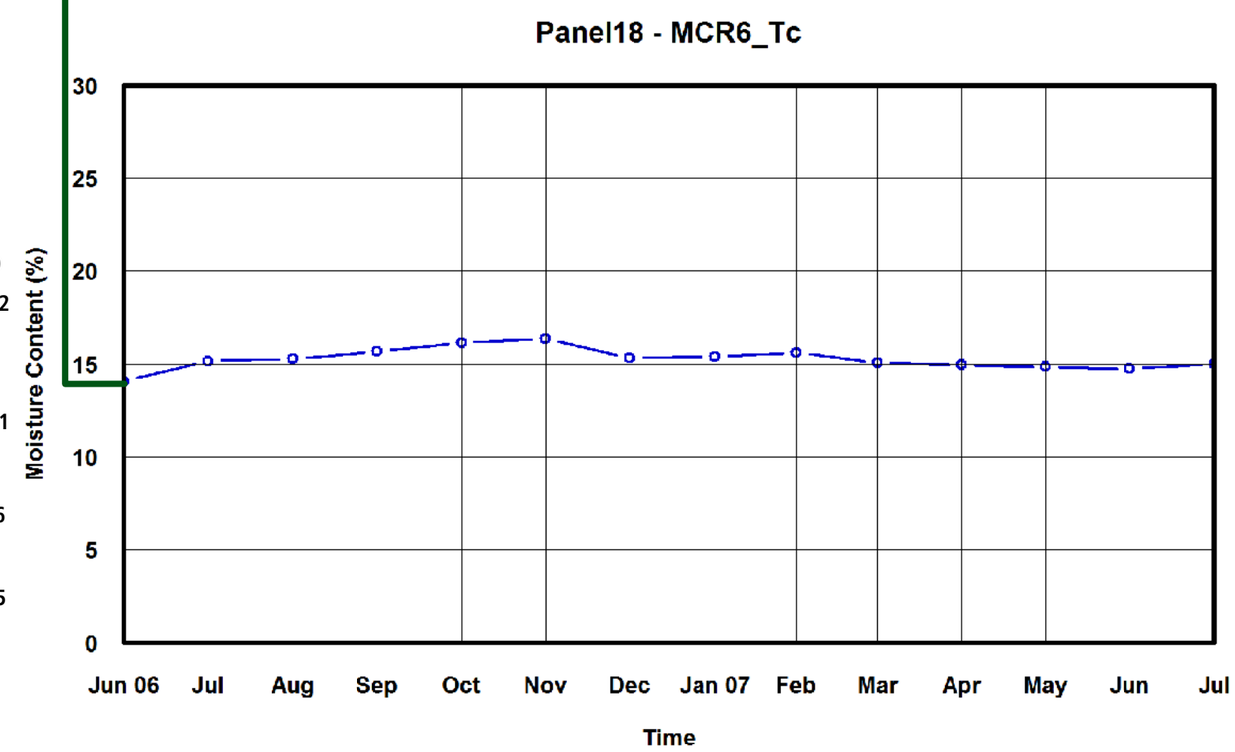
Panel18 - MCR6_Tc
Moisture Content (%)
30
25
20
15
10
5
0
Jun 06
Jul
Aug
Sep
Oct
Nov
Dec
Jan 07
Feb
Mar
Apr
May
Jun
Jul
Time

Panel 18

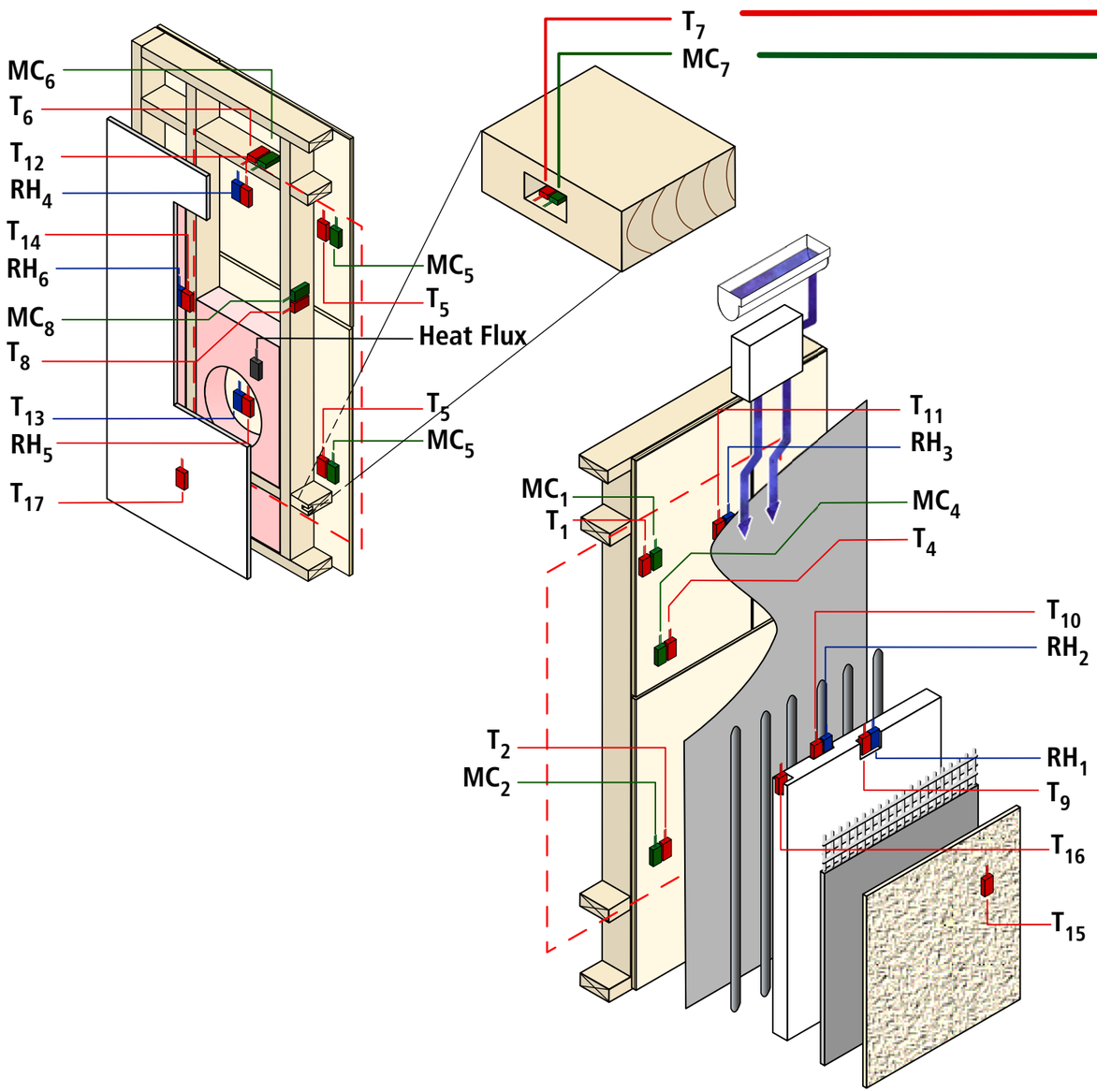
MC_6
T_6
T_{12}
RH_4
T_{14}
RH_6
MC_8
T_8
T_{13}
RH_5
T_{17}
T_7
MC_7
MC_5
T_5
Heat Flux
T_5
MC_5
T_{11}
RH_3
MC_1
T_1
MC_4
T_4
T_{10}
RH_2
T_2
MC_2
RH_1
T_9
T_{16}
T_{15}

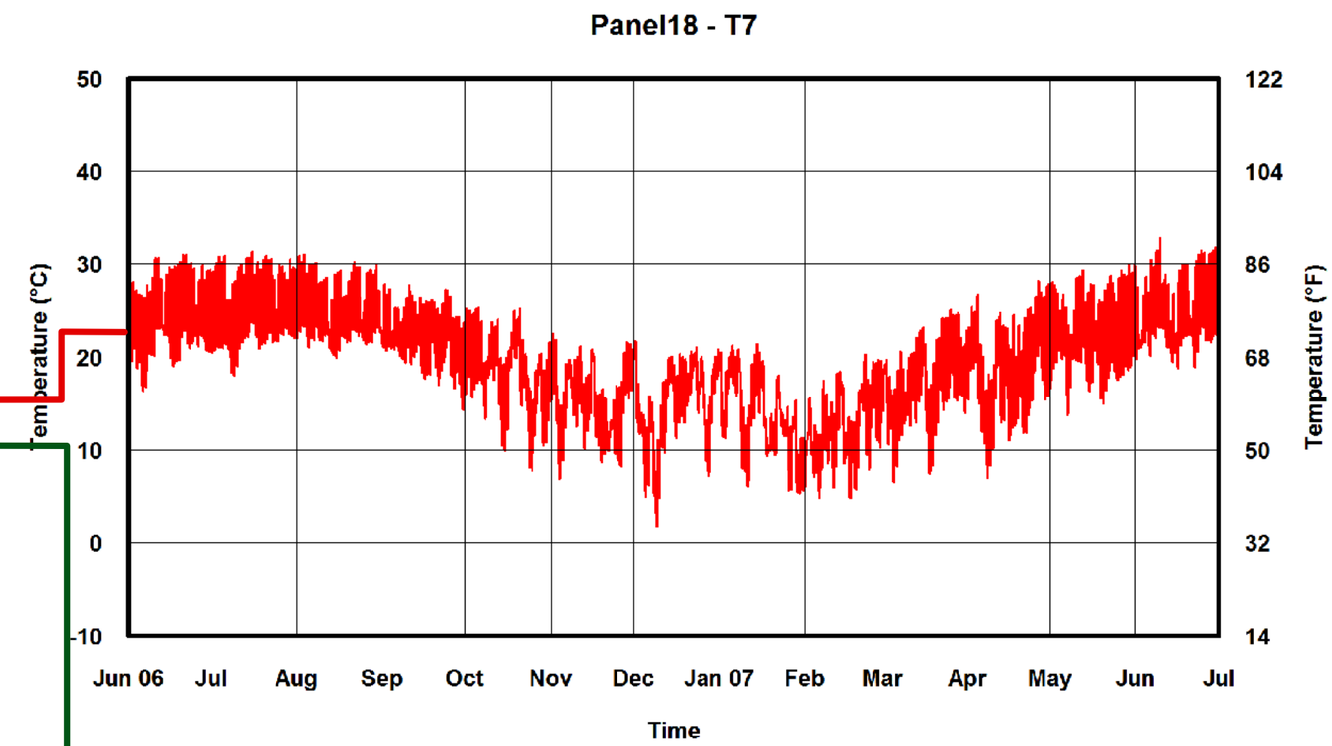
Panel18 - T7
Temperature (°C)
Temperature (°F)
50
40
30
20
10
0
-10
122
104
86
68
50
32
14
Jun 06
Jul
Aug
Sep
Oct
Nov
Dec
Jan 07
Feb
Mar
Apr
May
Jun
Jul
Time

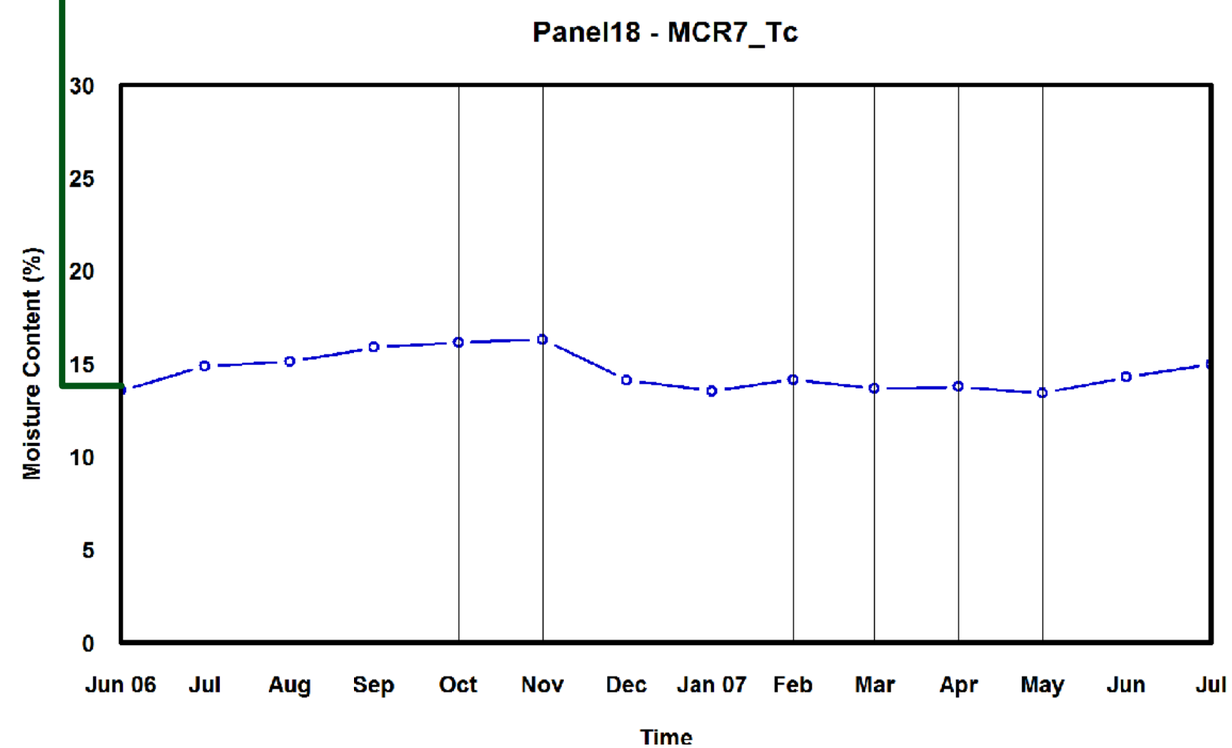
Panel18 - MCR7_Tc
Moisture Content (%)
30
25
20
15
10
5
0
Jun 06
Jul
Aug
Sep
Oct
Nov
Dec
Jan 07
Feb
Mar
Apr
May
Jun
Jul
Time

Panel 18

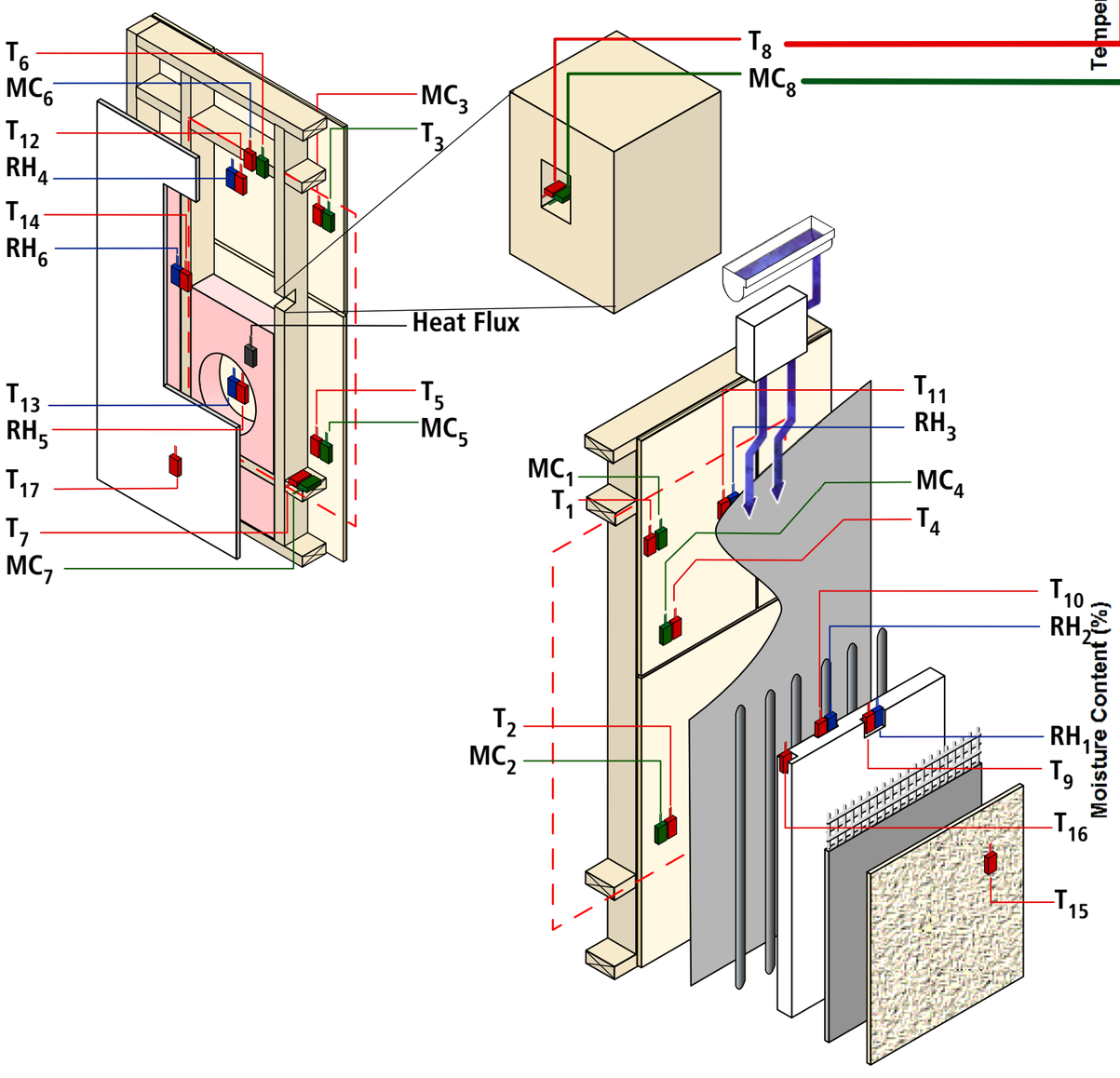
T_6
MC_6
T_{12}
RH_4
T_{14}
RH_6
T_{13}
RH_5
T_{17}
T_7
MC_7
MC_3
T_3
Heat Flux
T_5
MC_5
T_8
MC_8
T_{11}
RH_3
MC_1
T_1
MC_4
T_4
T_{10}
RH_2
T_2
MC_2
RH_1
T_9
T_{16}
T_{15}

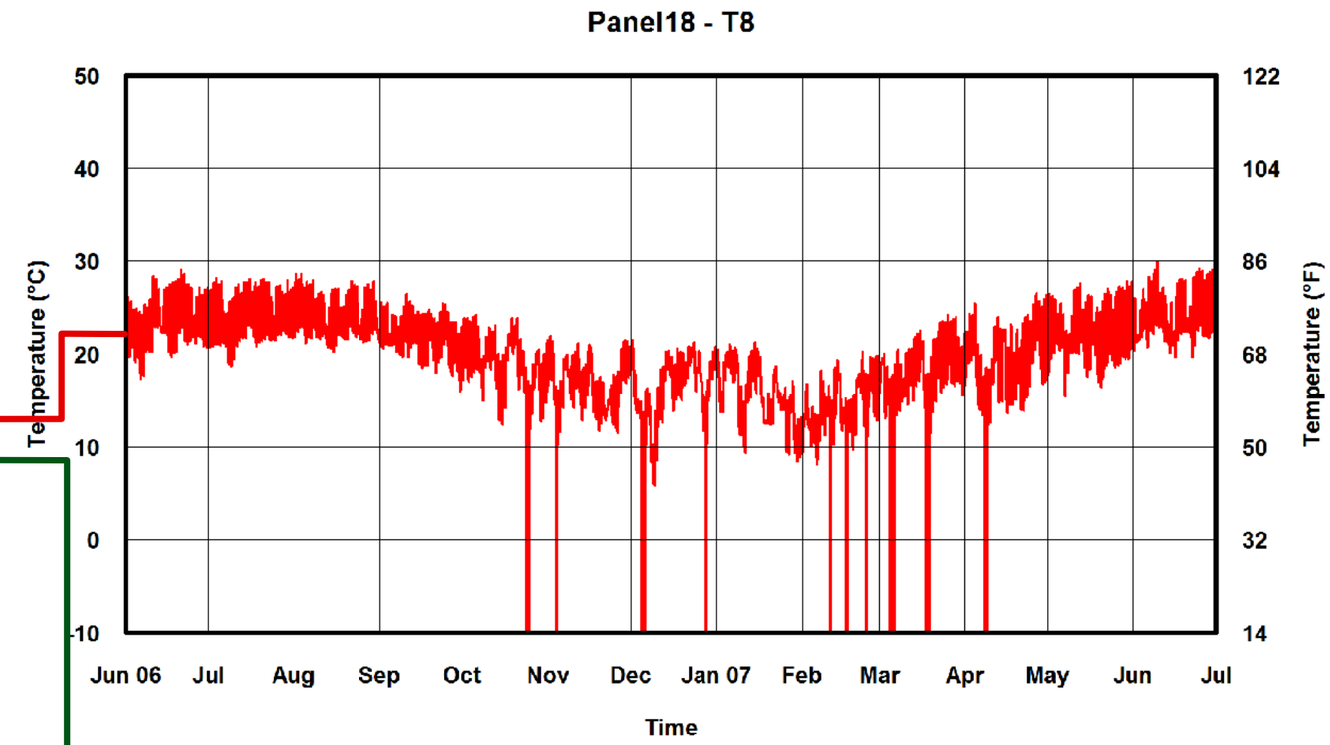
Panel18 - T8
Temperature (°C)
50
40
30
20
10
0
-10
Temperature (°F)
122
104
86
68
50
32
14
Jun 06
Jul
Aug
Sep
Oct
Nov
Dec
Jan 07
Feb
Mar
Apr
May
Jun
Jul
Time

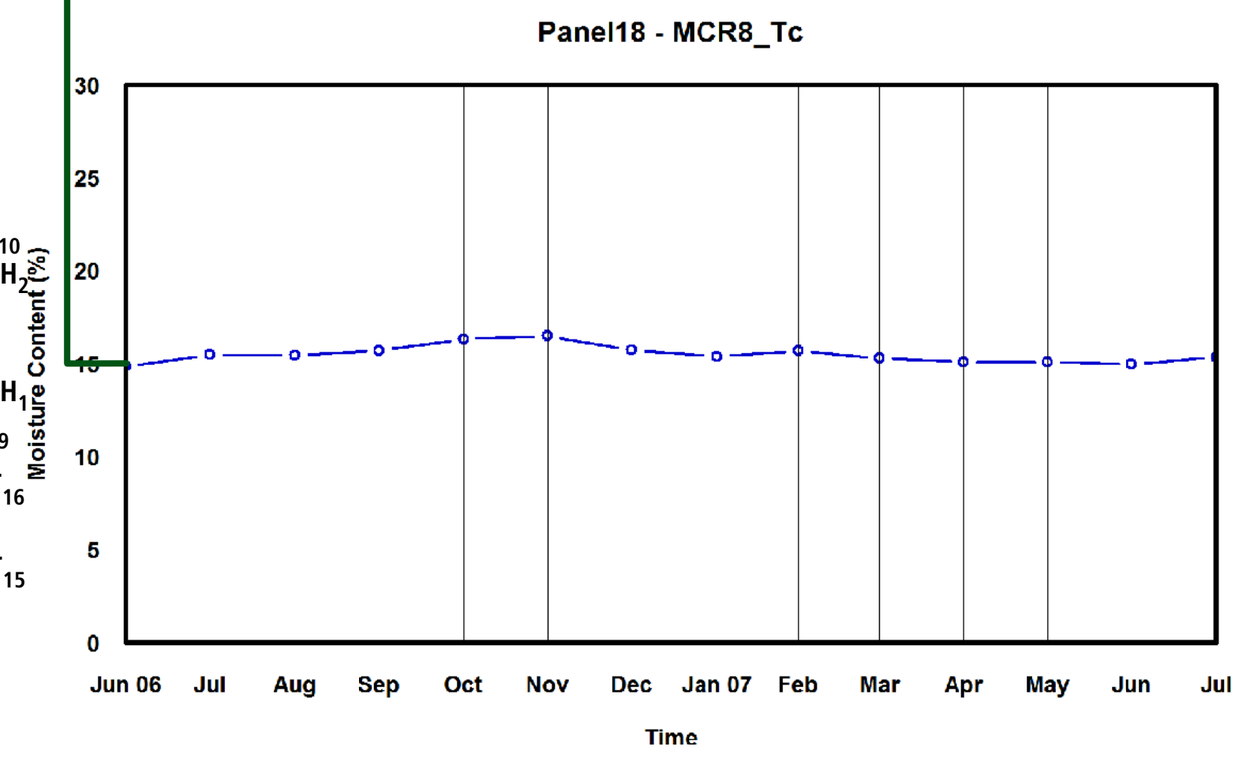
Panel18 - MCR8_Tc
Moisture Content (%)
30
25
20
15
10
5
0
Jun 06
Jul
Aug
Sep
Oct
Nov
Dec
Jan 07
Feb
Mar
Apr
May
Jun
Jul
Time

Panel 18

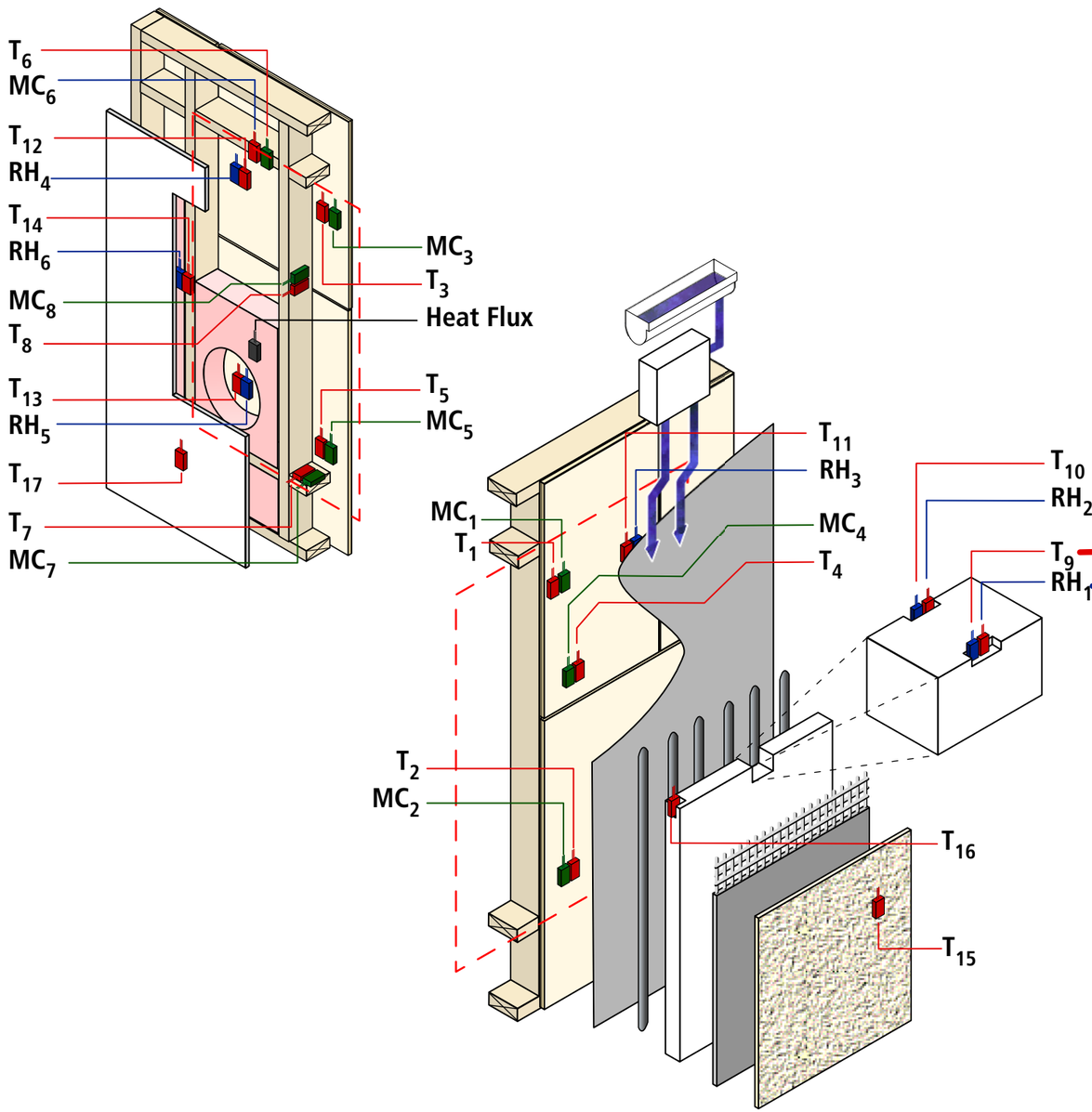
T_6
MC_6
T_{12}
RH_4
T_{14}
RH_6
MC_8
T_8
T_{13}
RH_5
T_{17}
T_7
MC_7
MC_3
T_3
Heat Flux
T_5
MC_5
T_{11}
RH_3
MC_1
T_1
MC_4
T_4
T_{10}
RH_2
T_9
RH_1
T_2
MC_2
T_{16}
T_{15}

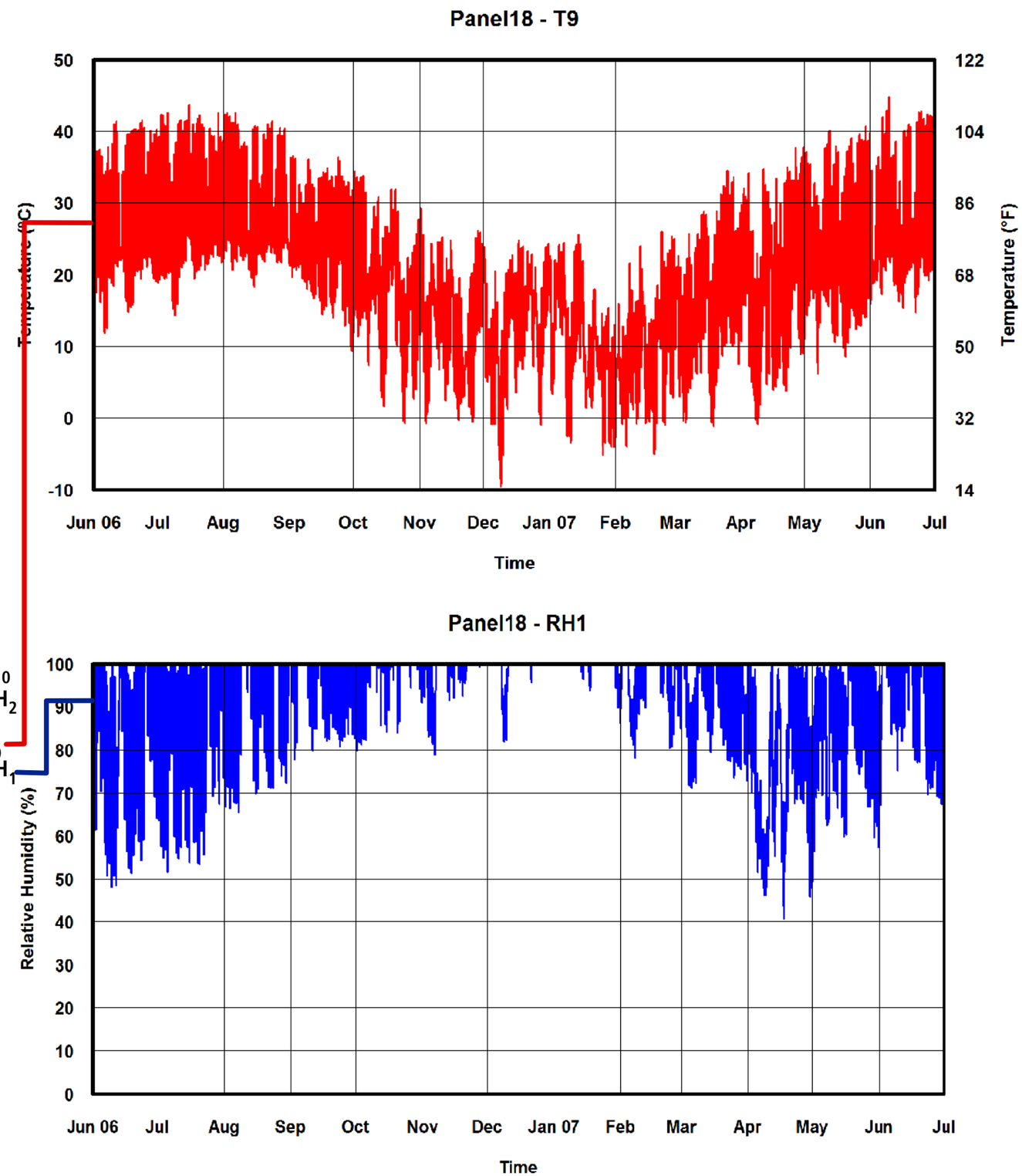
Panel18 - T9
Temperature (°C)
Temperature (°F)
50
40
30
20
10
0
-10
122
104
86
68
50
32
14
Jun 06
Jul
Aug
Sep
Oct
Nov
Dec
Jan 07
Feb
Mar
Apr
May
Jun
Jul
Time
Panel18 - RH1
Relative Humidity (%)
100
90
80
70
60
50
40
30
20
10
0
Jun 06
Jul
Aug
Sep
Oct
Nov
Dec
Jan 07
Feb
Mar
Apr
May
Jun
Jul
Time

Panel 18

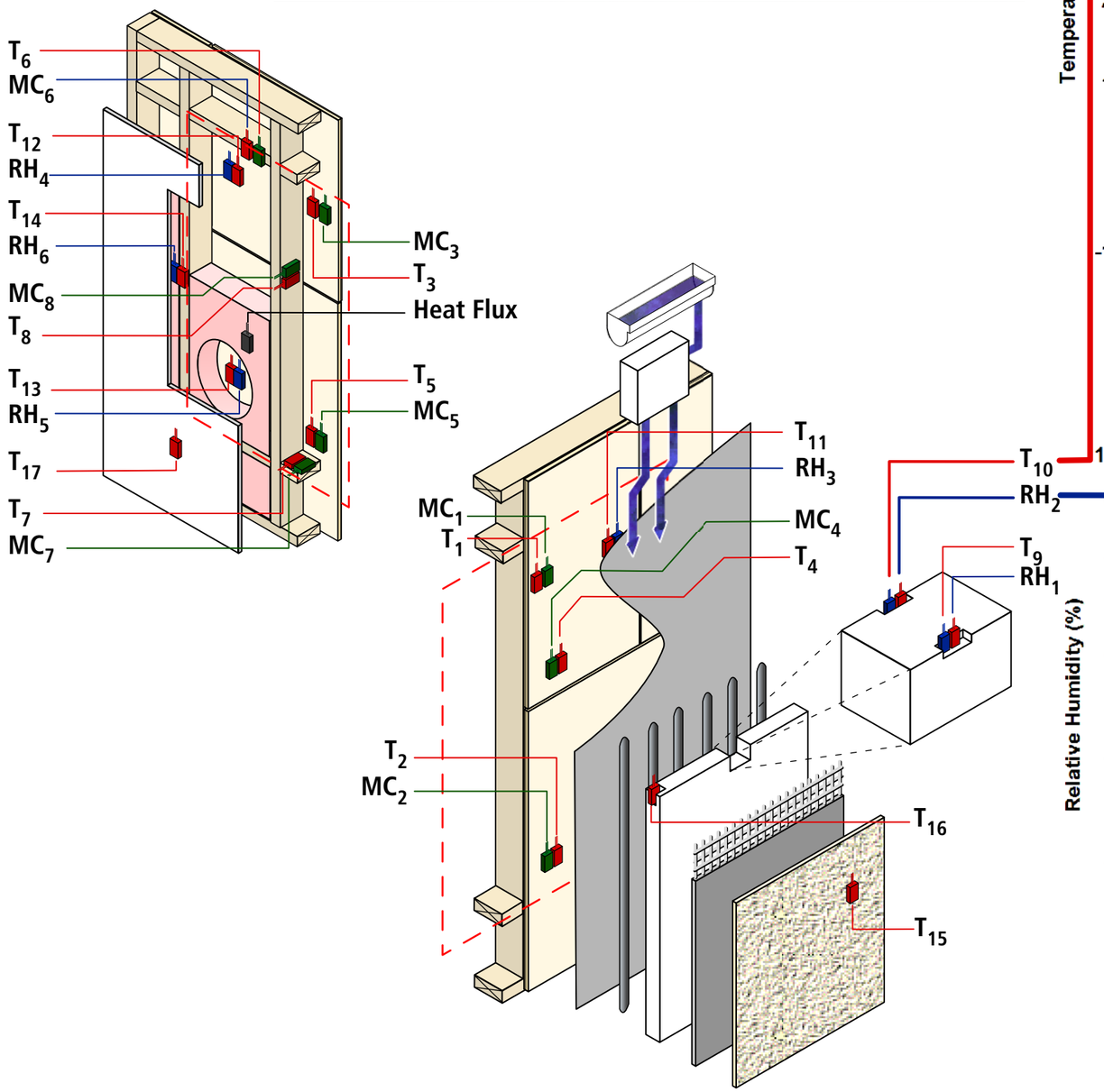
T_6
MC_6
T_{12}
RH_4
T_{14}
RH_6
MC_8
T_8
T_{13}
RH_5
T_{17}
T_7
MC_7
MC_3
T_3
Heat Flux
T_5
MC_5
T_{11}
RH_3
MC_1
T_1
MC_4
T_4
T_{10}
RH_2
T_9
RH_1
T_2
MC_2
T_{16}
T_{15}

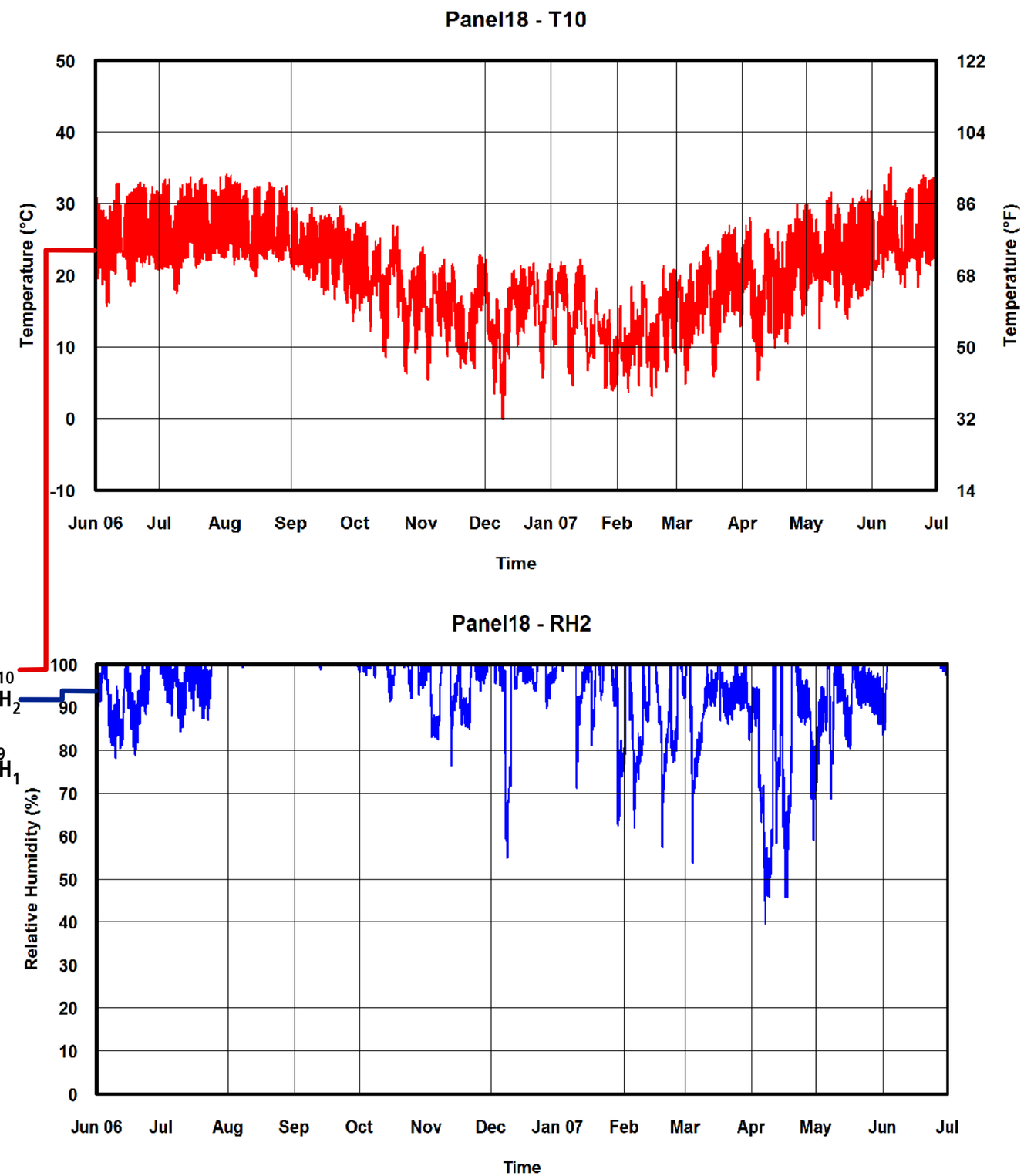
Panel18 - T10
Temperature (°C)
Temperature (°F)
50
40
30
20
10
0
-10
122
104
86
68
50
32
14
Jun 06
Jul
Aug
Sep
Oct
Nov
Dec
Jan 07
Feb
Mar
Apr
May
Jun
Jul
Time
Panel18 - RH2
Relative Humidity (%)
100
90
80
70
60
50
40
30
20
10
0
Jun 06
Jul
Aug
Sep
Oct
Nov
Dec
Jan 07
Feb
Mar
Apr
May
Jun
Jul
Time

Panel 18

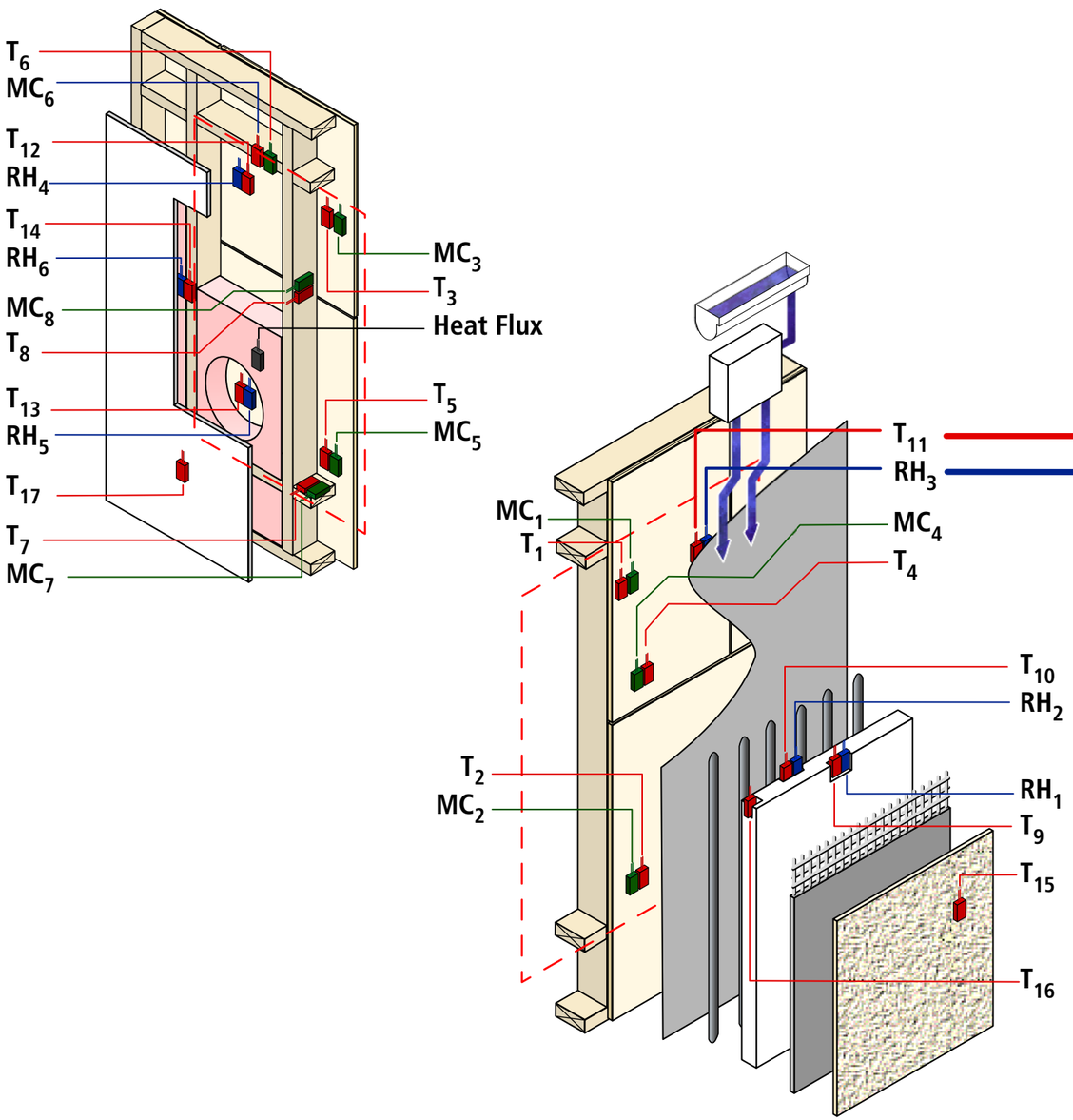
T_6
MC_6
T_{12}
RH_4
T_{14}
RH_6
MC_8
T_8
T_{13}
RH_5
T_{17}
T_7
MC_7
MC_3
T_3
Heat Flux
T_5
MC_5
T_{11}
RH_3
MC_1
T_1
MC_4
T_4
T_{10}
RH_2
T_2
MC_2
RH_1
T_9
T_{15}
T_{16}

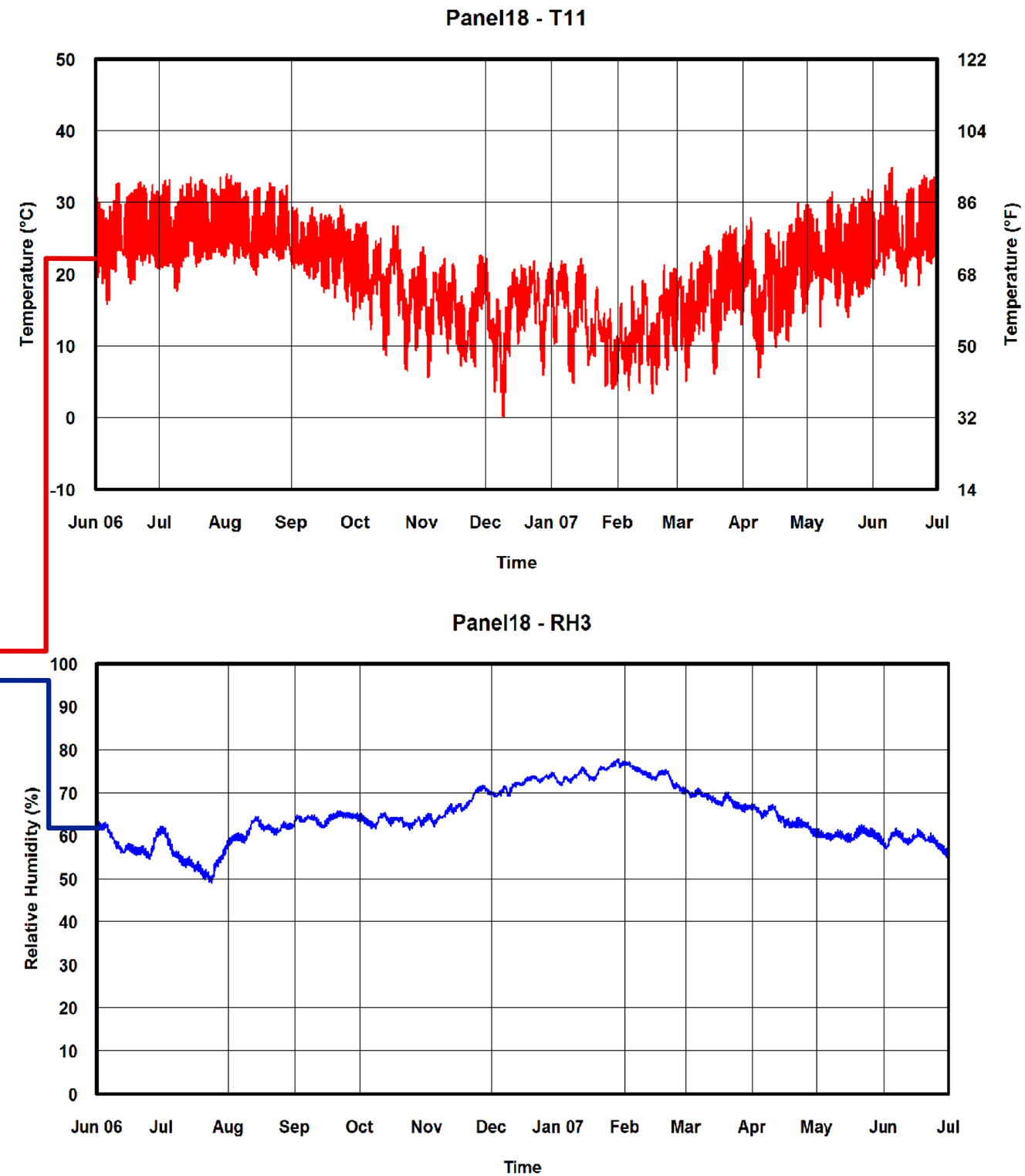
Panel18 - T11
Temperature (°C)
50
40
30
20
10
0
-10
Temperature (°F)
122
104
86
68
50
32
14
Jun 06
Jul
Aug
Sep
Oct
Nov
Dec
Jan 07
Feb
Mar
Apr
May
Jun
Jul
Time
Panel18 - RH3
Relative Humidity (%)
100
90
80
70
60
50
40
30
20
10
0
Jun 06
Jul
Aug
Sep
Oct
Nov
Dec
Jan 07
Feb
Mar
Apr
May
Jun
Jul
Time

Panel 18

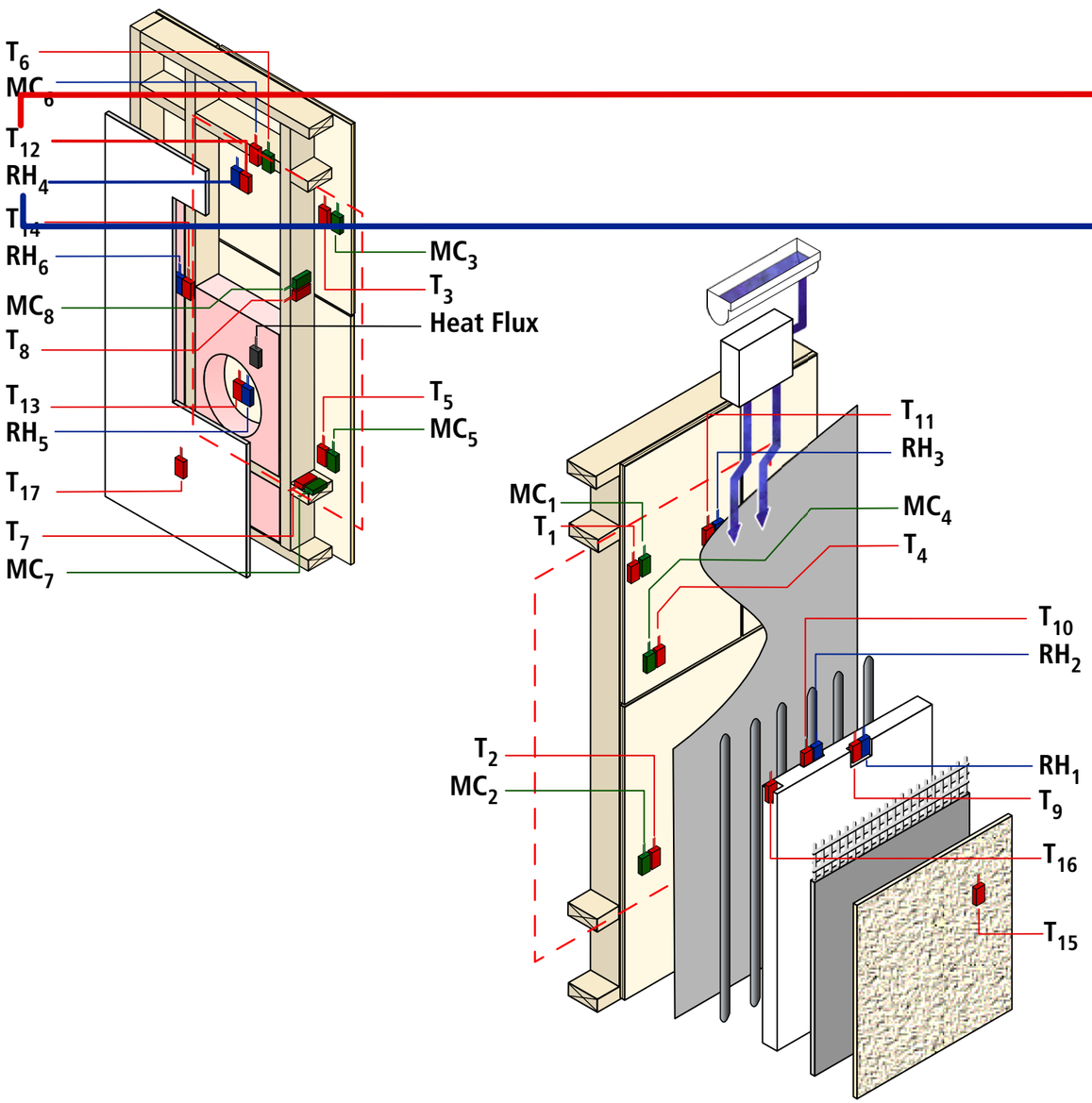
T_6
MC_6
T_{12}
RH_4
T_{14}
RH_6
MC_8
T_8
T_{13}
RH_5
T_{17}
T_7
MC_7
MC_3
T_3
Heat Flux
T_5
MC_5
T_{11}
RH_3
MC_1
T_1
MC_4
T_4
T_{10}
RH_2
T_2
MC_2
RH_1
T_9
T_{16}
T_{15}

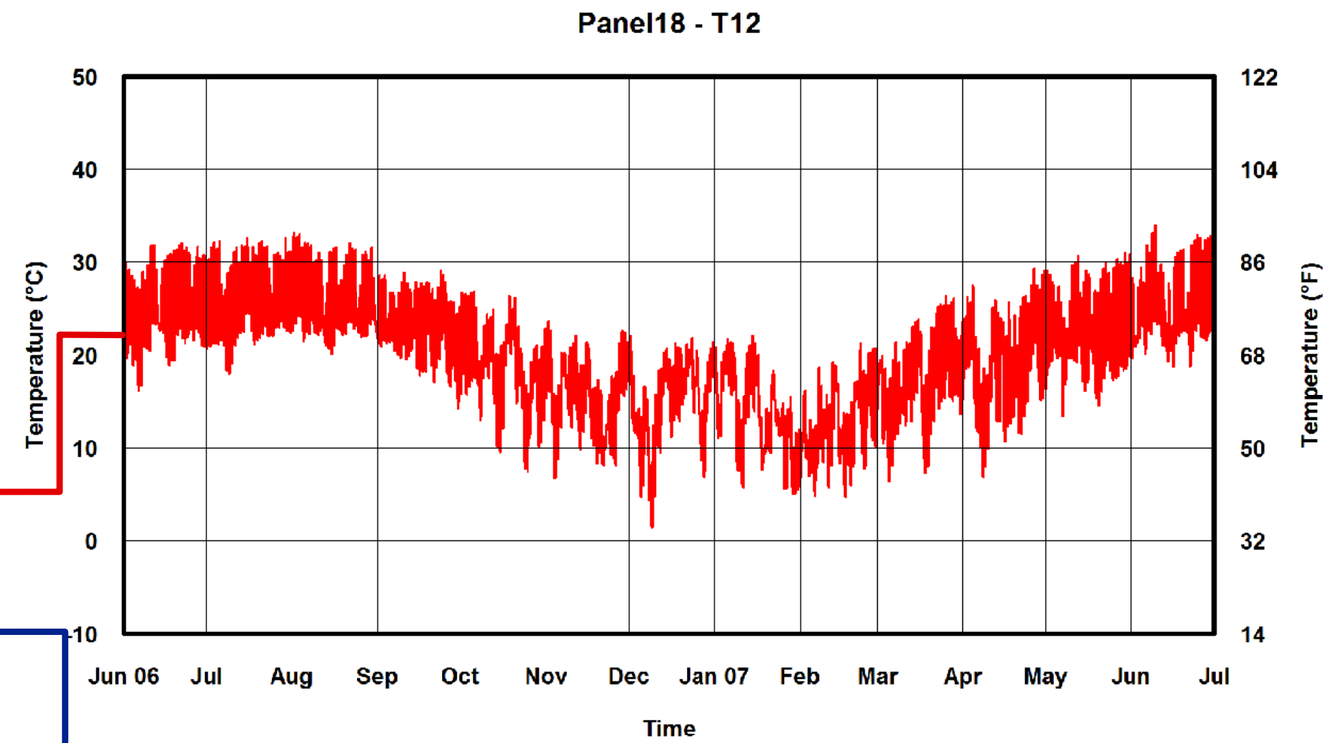
Panel18 - T12
Temperature (°C)
Temperature (°F)
50
40
30
20
10
0
-10
122
104
86
68
50
32
14
Jun 06
Jul
Aug
Sep
Oct
Nov
Dec
Jan 07
Feb
Mar
Apr
May
Jun
Jul
Time

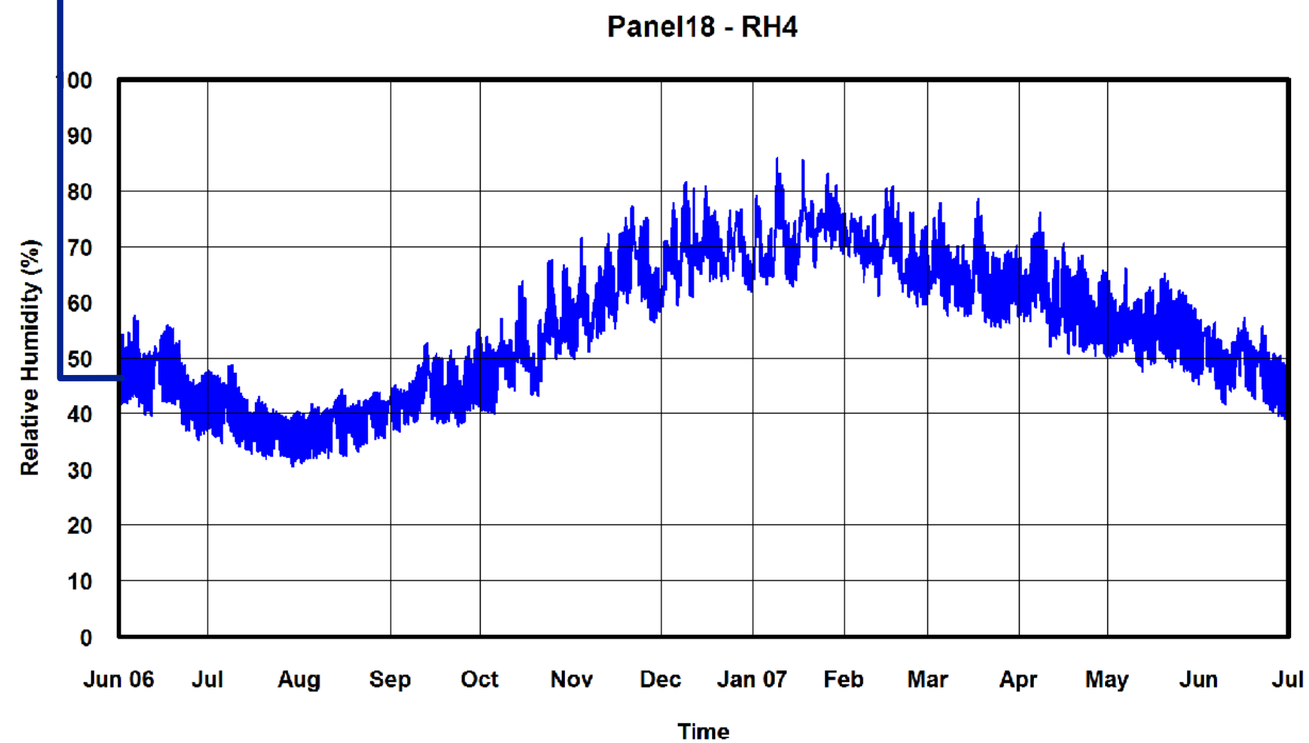
Panel18 - RH4
Relative Humidity (%)
100
90
80
70
60
50
40
30
20
10
0
Jun 06
Jul
Aug
Sep
Oct
Nov
Dec
Jan 07
Feb
Mar
Apr
May
Jun
Jul
Time

Panel 18

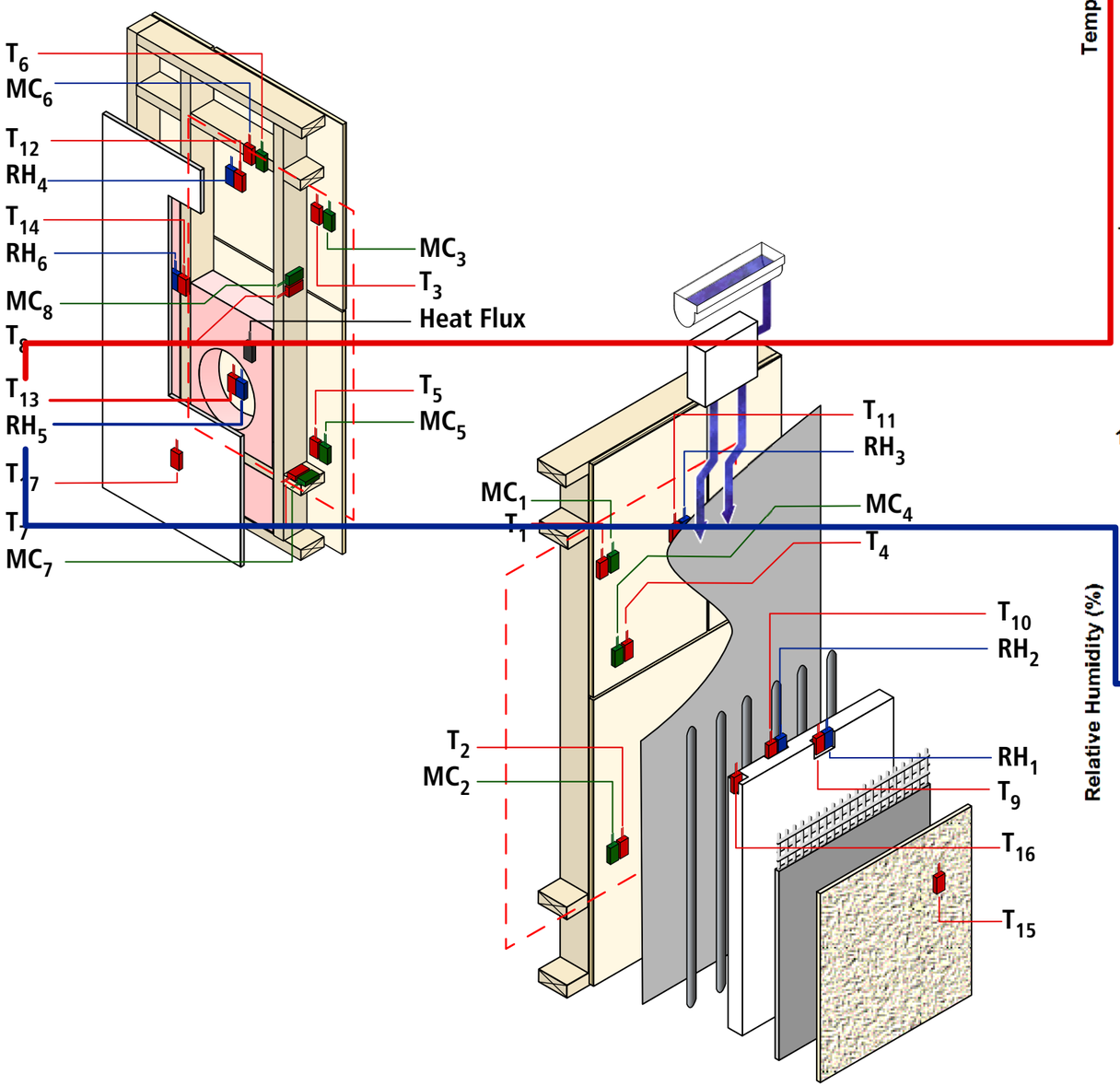
T_6
MC_6
T_{12}
RH_4
T_{14}
RH_6
MC_8
T_8
T_{13}
RH_5
T_7
T_1
MC_7
MC_3
T_3
Heat Flux
T_5
MC_5
T_{11}
RH_3
MC_1
T_1
MC_4
T_4
T_{10}
RH_2
T_2
MC_2
RH_1
T_9
T_{16}
T_{15}

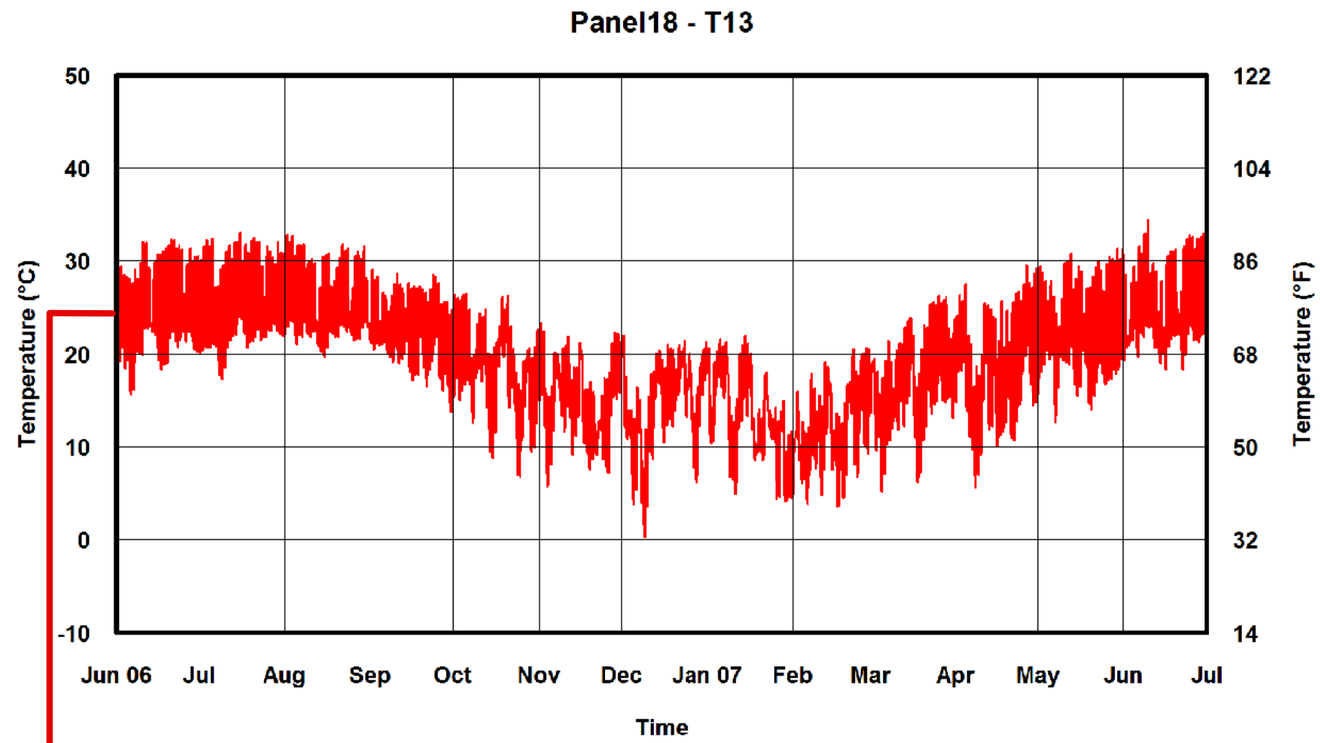
Panel18 - T13
Temperature (°C)
Temperature (°F)
50
40
30
20
10
0
-10
122
104
86
68
50
32
14
Jun 06
Jul
Aug
Sep
Oct
Nov
Dec
Jan 07
Feb
Mar
Apr
May
Jun
Jul
Time

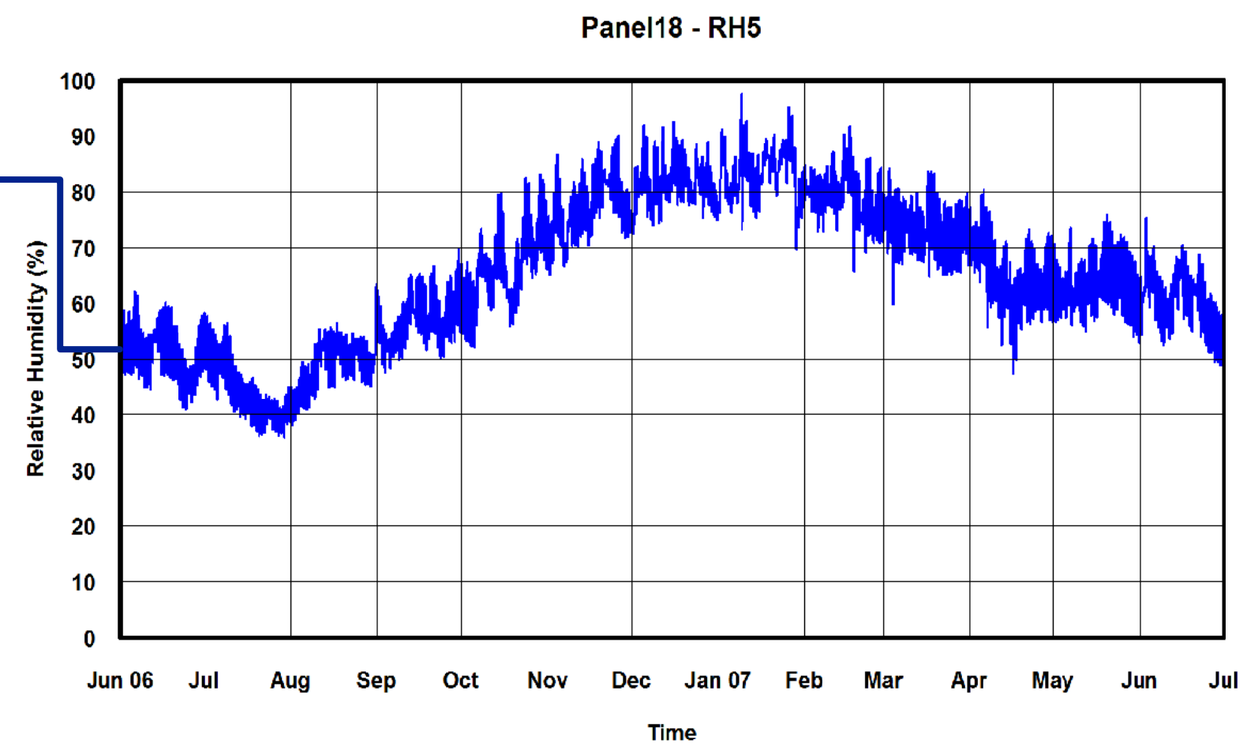
Panel18 - RH5
Relative Humidity (%)
100
90
80
70
60
50
40
30
20
10
0
Jun 06
Jul
Aug
Sep
Oct
Nov
Dec
Jan 07
Feb
Mar
Apr
May
Jun
Jul
Time

Panel 18

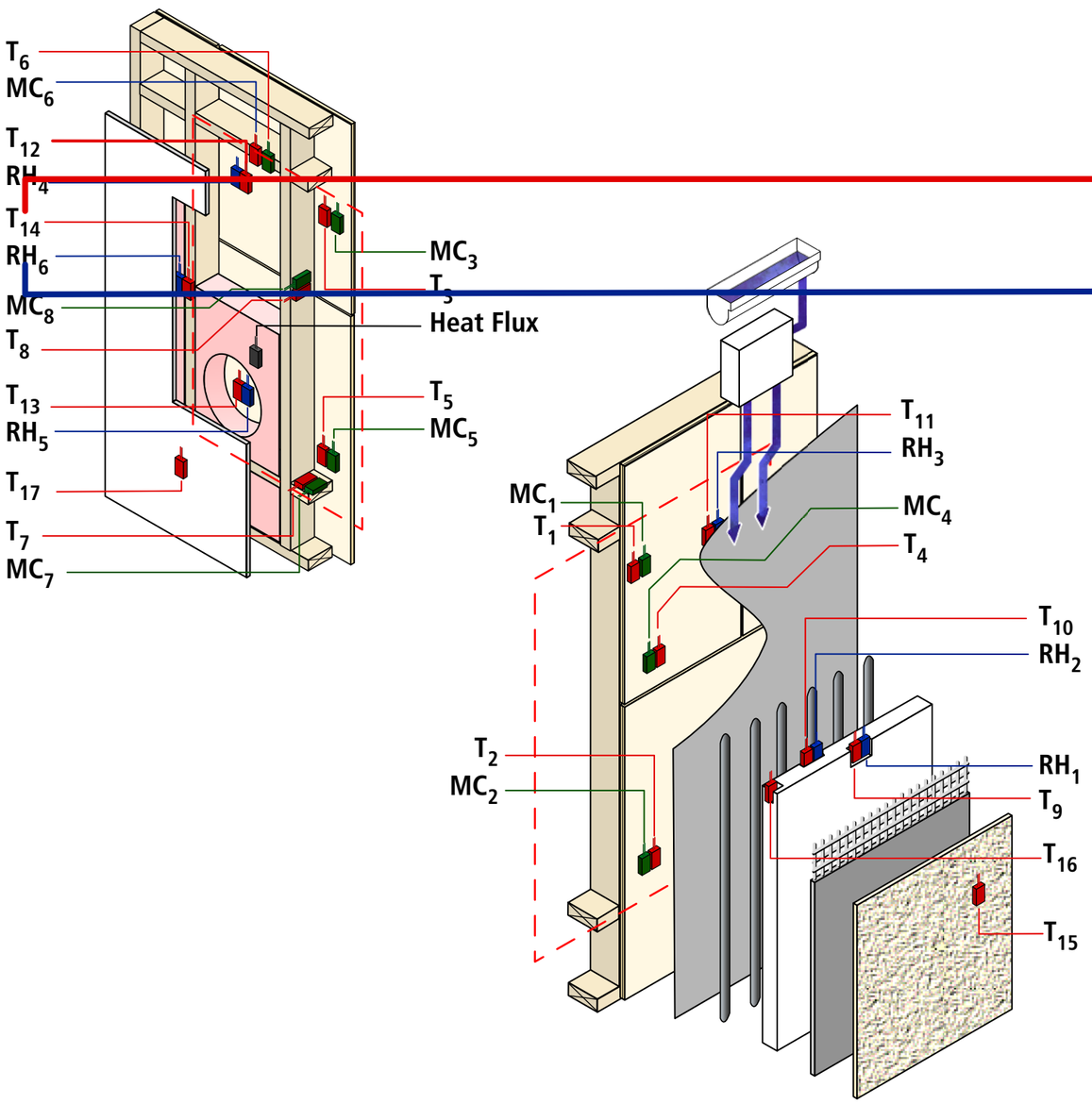
T_6
MC_6
T_{12}
RH_4
T_{14}
RH_6
MC_8
T_8
T_{13}
RH_5
T_{17}
T_7
MC_7
MC_3
T_3
Heat Flux
T_5
MC_5
T_{11}
RH_3
MC_1
T_1
MC_4
T_4
T_{10}
RH_2
T_2
MC_2
RH_1
T_9
T_{16}
T_{15}

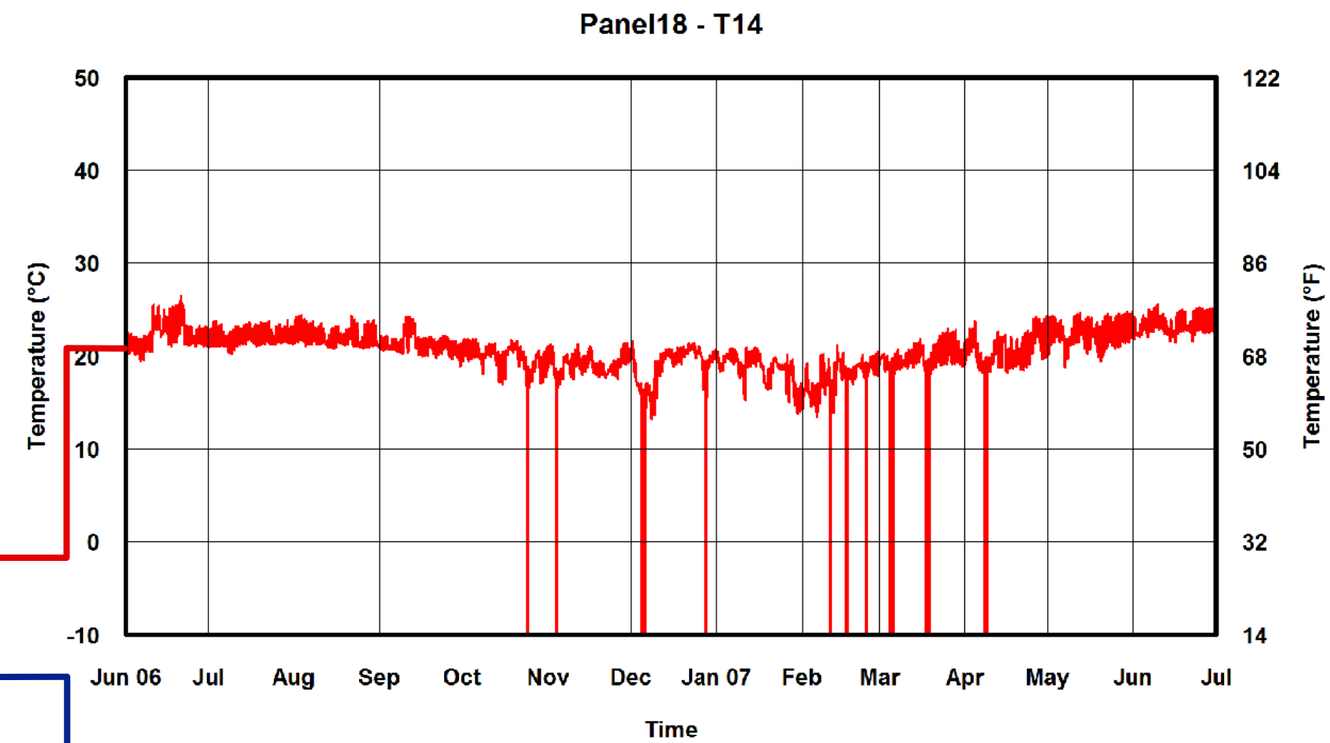
Panel18 - T14
Temperature (°C)
Temperature (°F)
50
40
30
20
10
0
-10
122
104
86
68
50
32
14
Jun 06
Jul
Aug
Sep
Oct
Nov
Dec
Jan 07
Feb
Mar
Apr
May
Jun
Jul
Time

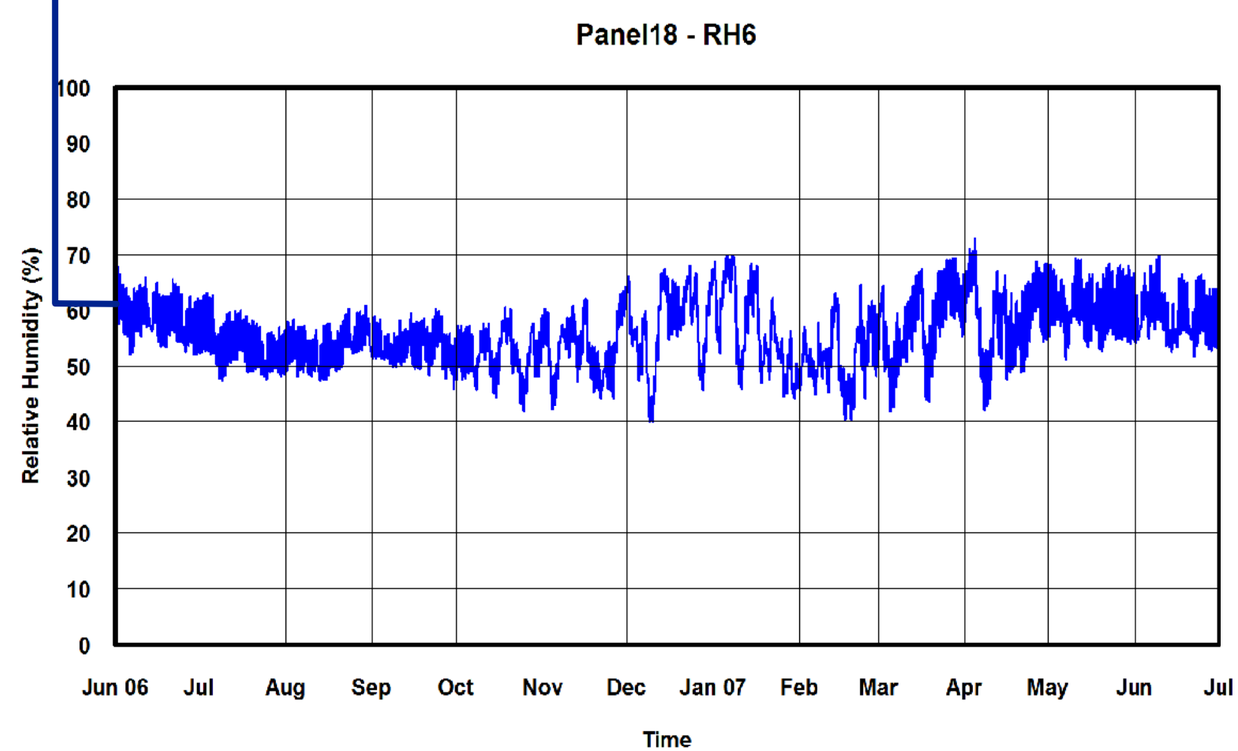
Panel18 - RH6
Relative Humidity (%)
100
90
80
70
60
50
40
30
20
10
0
Jun 06
Jul
Aug
Sep
Oct
Nov
Dec
Jan 07
Feb
Mar
Apr
May
Jun
Jul
Time

Panel 18

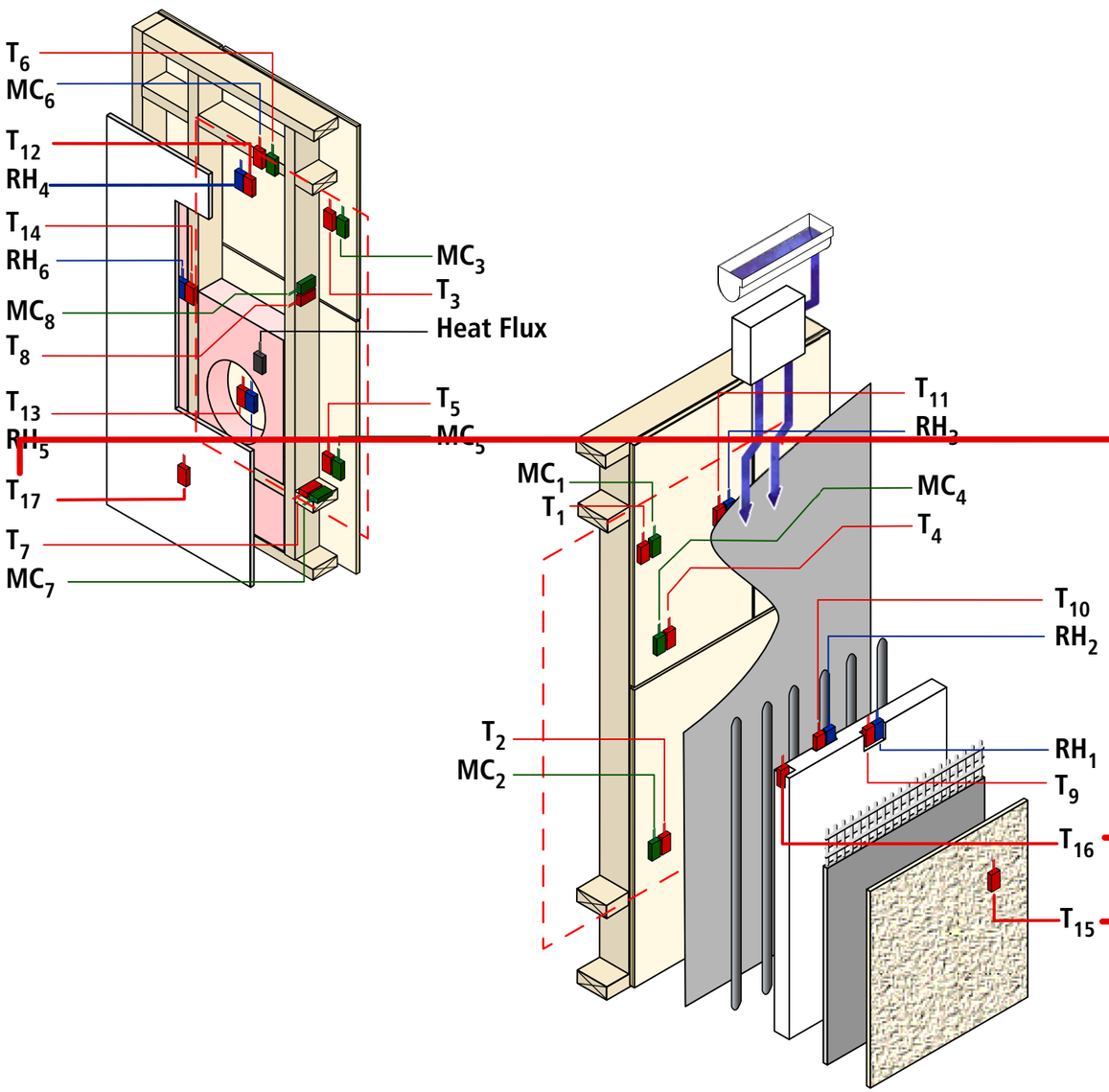
T_6
MC_6
T_{12}
RH_4
T_{14}
RH_6
MC_8
T_8
T_{13}
RH_5
T_{17}
T_7
MC_7
MC_3
T_3
Heat Flux
T_5
MC_5
MC_1
T_1
T_{11}
RH_3
MC_4
T_4
T_{10}
RH_2
T_2
MC_2
RH_1
T_9
T_{16}
T_{15}

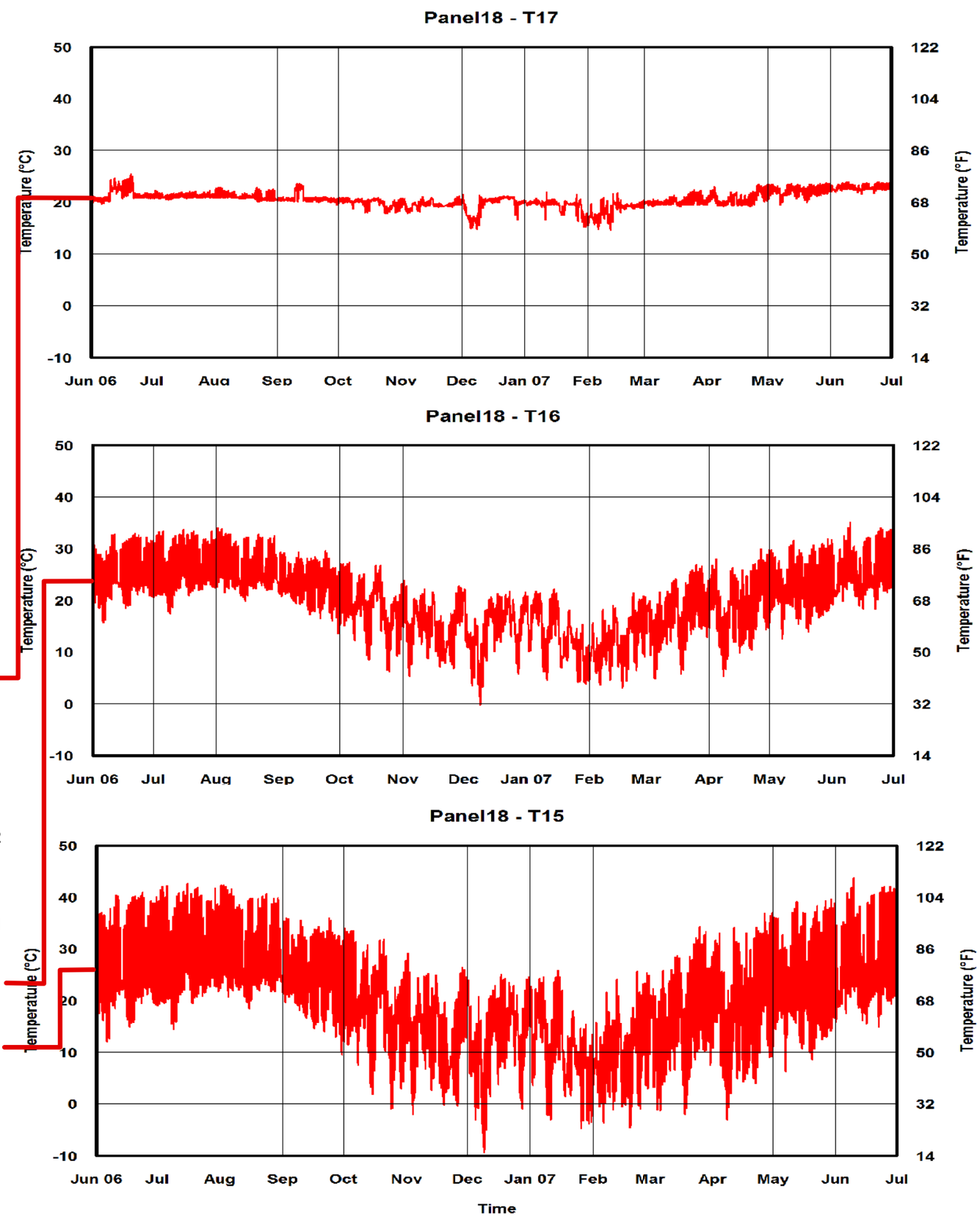
Panel18 - T17
Panel18 - T16
Panel18 - T15
Temperature (°C)
Temperature (°F)
50
40
30
20
10
0
-10
122
104
86
68
50
32
14
Jun 06
Jul
Aug
Sep
Oct
Nov
Dec
Jan 07
Feb
Mar
Apr
May
Jun
Jul
Time

Panel 26

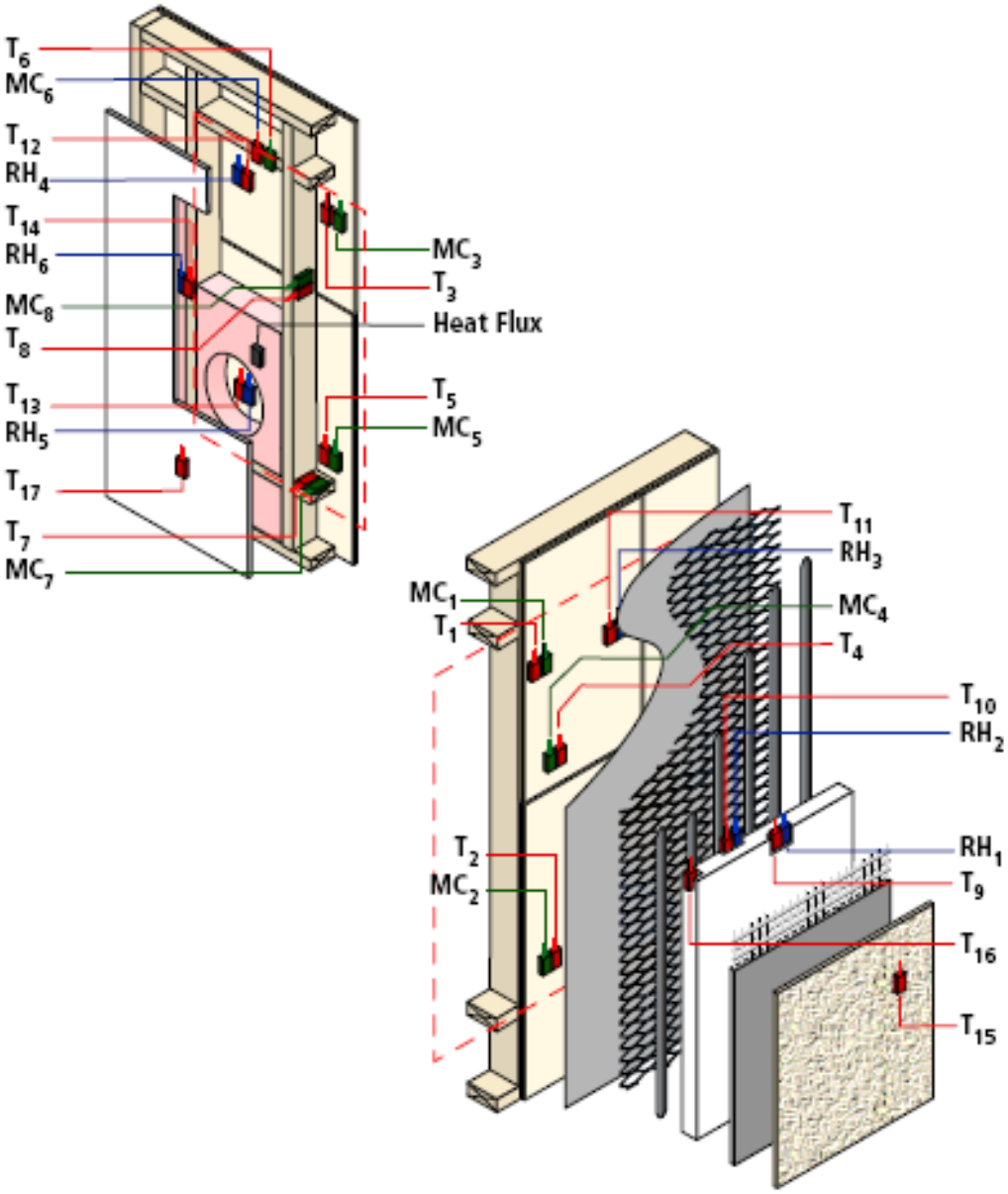
T_6
MC_6
T_{12}
RH_4
T_{14}
RH_6
MC_8
T_8
T_{13}
RH_5
T_{17}
T_7
MC_7
MC_3
T_3
Heat Flux
T_5
MC_5
T_{11}
RH_3
MC_1
T_1
MC_4
T_4
T_{10}
RH_2
T_2
MC_2
RH_1
T_9
T_{16}
T_{15}

Panel 26

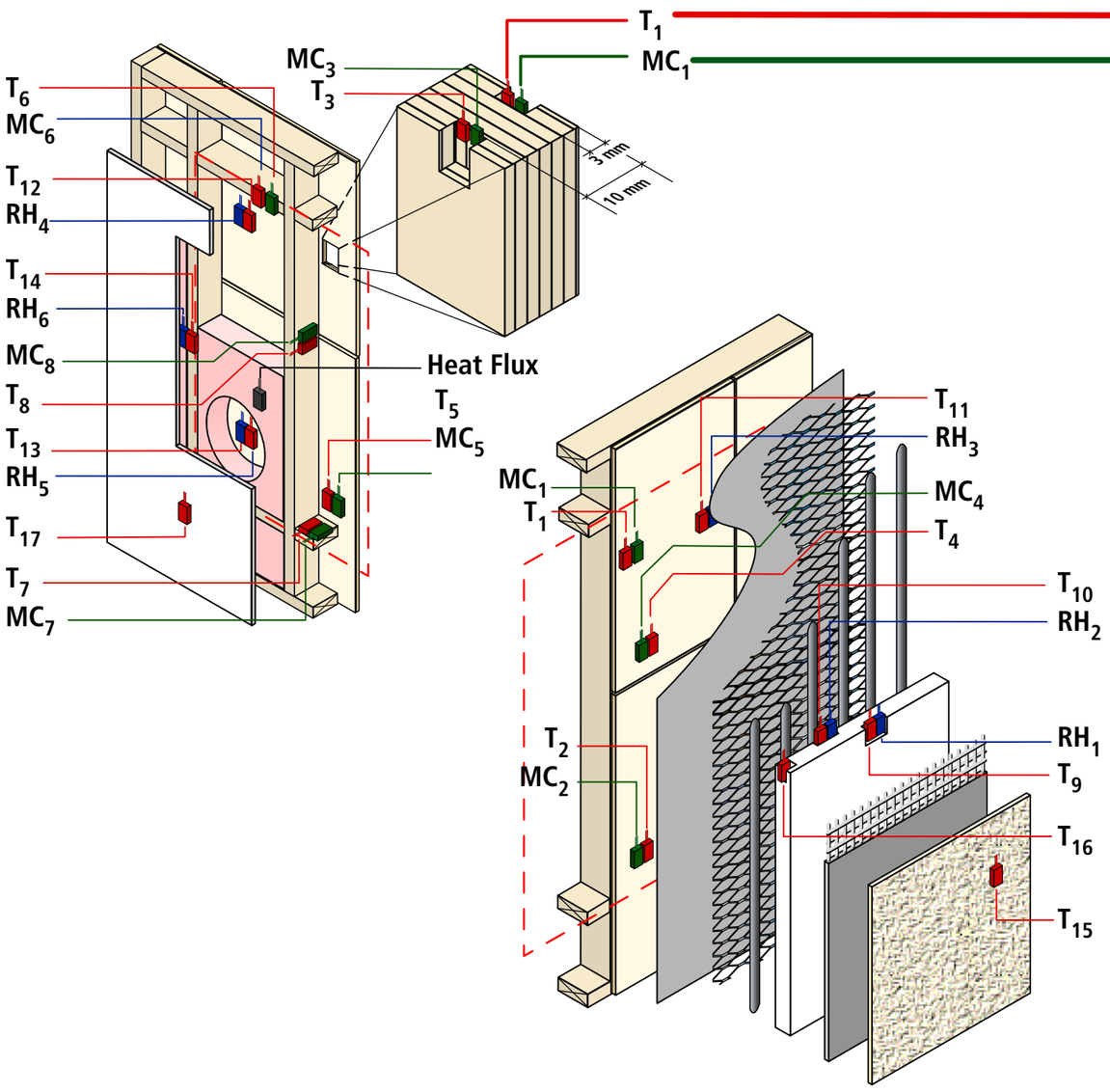
T1
MC1
MC3
T3
T6
MC6
T12
RH4
T14
RH6
MC8
T8
T13
RH5
T17
T7
MC7
3 mm
10 mm
Heat Flux
T5
MC5
T11
RH3
MC4
T4
T10
RH2
RH1
T9
T16
T15
MC1
T1
T2
MC2

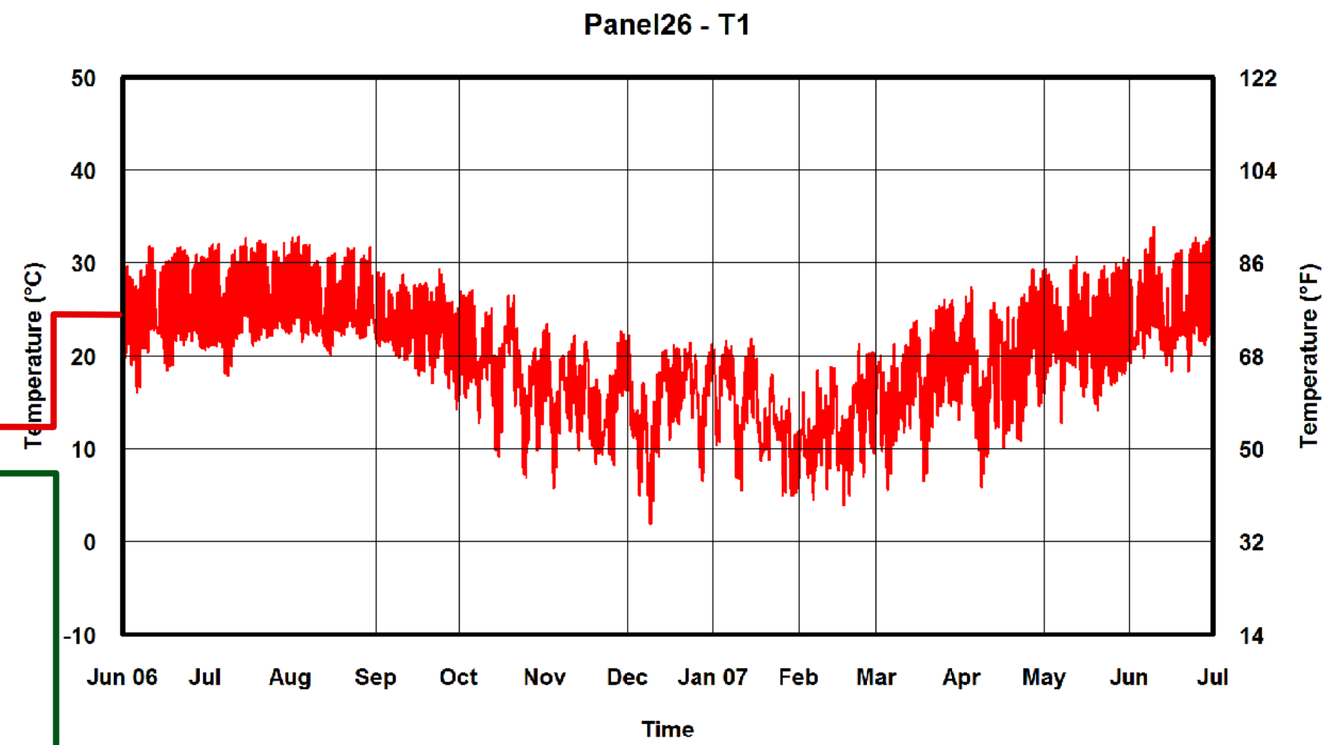
Panel26 - T1
Temperature (°C)
Temperature (°F)
50
40
30
20
10
0
-10
122
104
86
68
50
32
14
Jun 06
Jul
Aug
Sep
Oct
Nov
Dec
Jan 07
Feb
Mar
Apr
May
Jun
Jul
Time

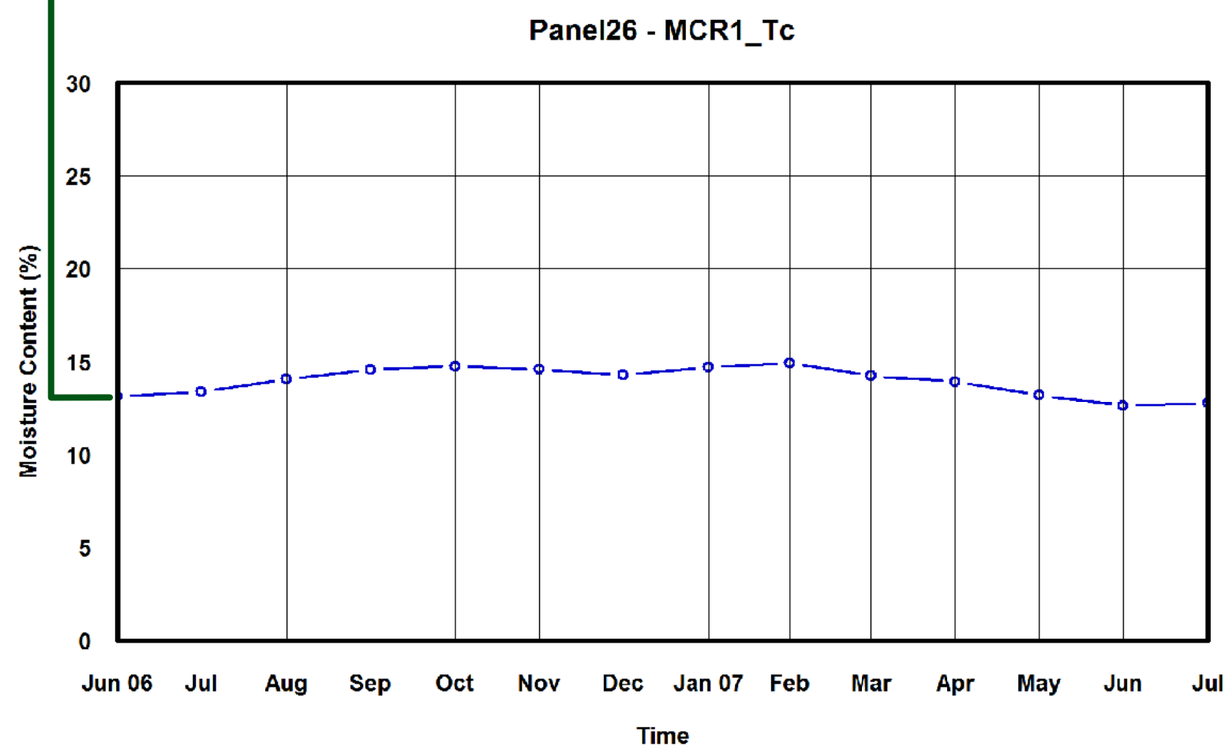
Panel26 - MCR1_Tc
Moisture Content (%)
30
25
20
15
10
5
0
Jun 06
Jul
Aug
Sep
Oct
Nov
Dec
Jan 07
Feb
Mar
Apr
May
Jun
Jul
Time

Panel 26

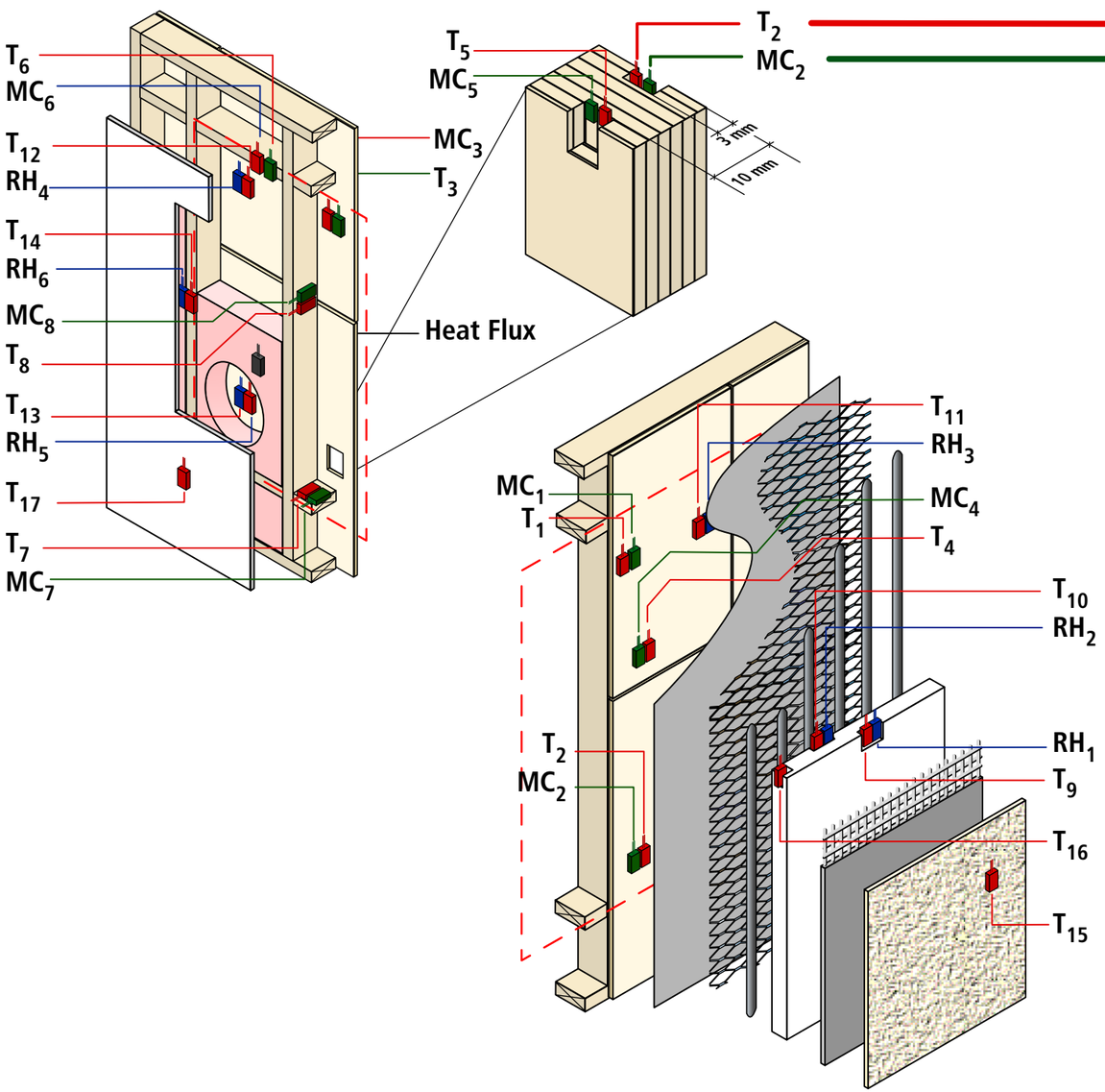
T_6
MC_6
T_{12}
RH_4
T_{14}
RH_6
MC_8
T_8
T_{13}
RH_5
T_{17}
T_7
MC_7
T_5
MC_5
T_2
MC_2
MC_3
T_3
3 mm
10 mm
Heat Flux
T_{11}
RH_3
MC_4
T_4
MC_1
T_1
T_{10}
RH_2
T_2
MC_2
RH_1
T_9
T_{16}
T_{15}

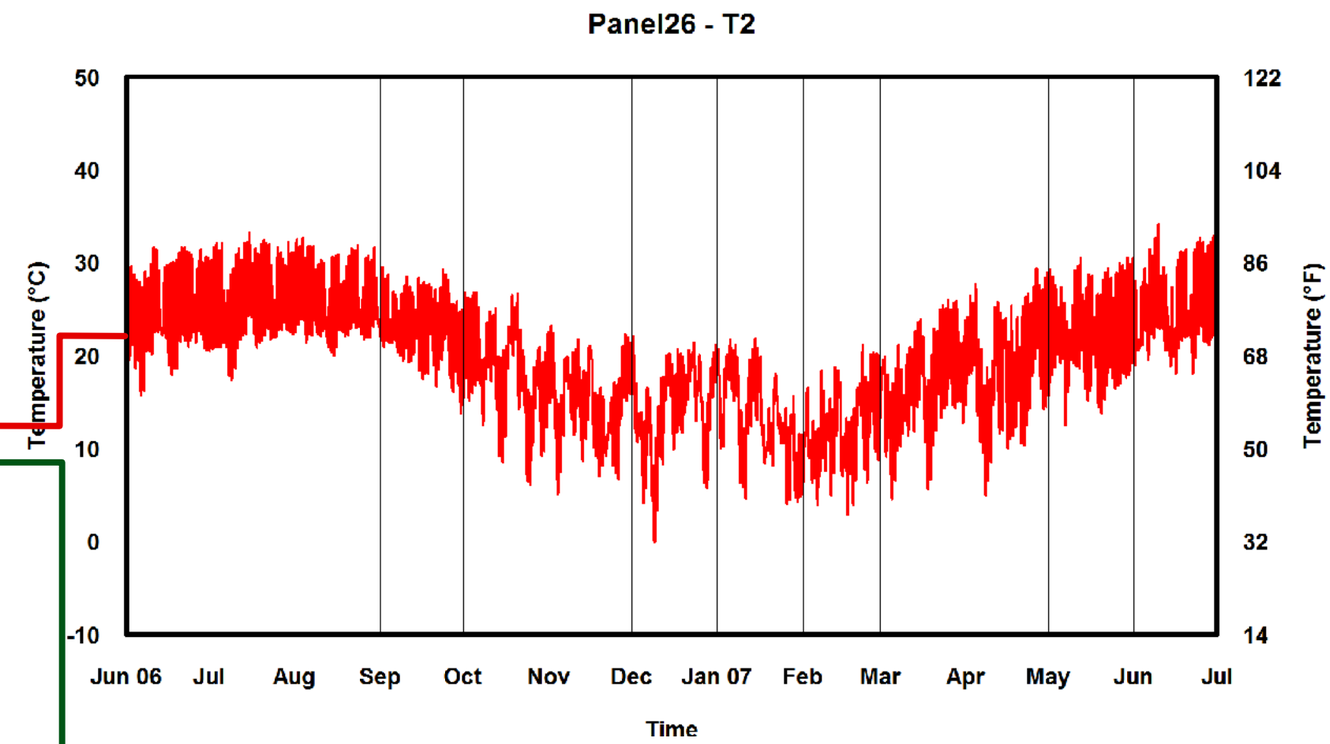
Panel26 - T2
Temperature (°C)
Temperature (°F)
50
40
30
20
10
0
-10
122
104
86
68
50
32
14
Jun 06
Jul
Aug
Sep
Oct
Nov
Dec
Jan 07
Feb
Mar
Apr
May
Jun
Jul
Time

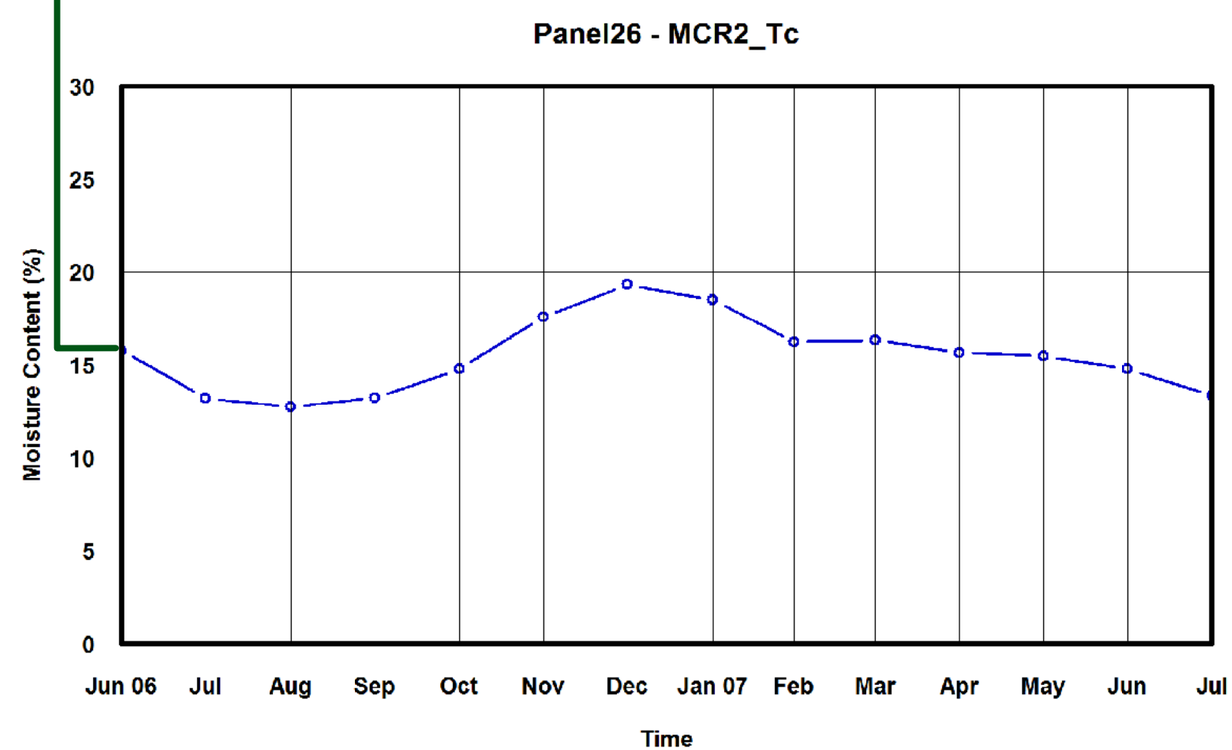
Panel26 - MCR2_Tc
Moisture Content (%)
30
25
20
15
10
5
0
Jun 06
Jul
Aug
Sep
Oct
Nov
Dec
Jan 07
Feb
Mar
Apr
May
Jun
Jul
Time

Panel 26

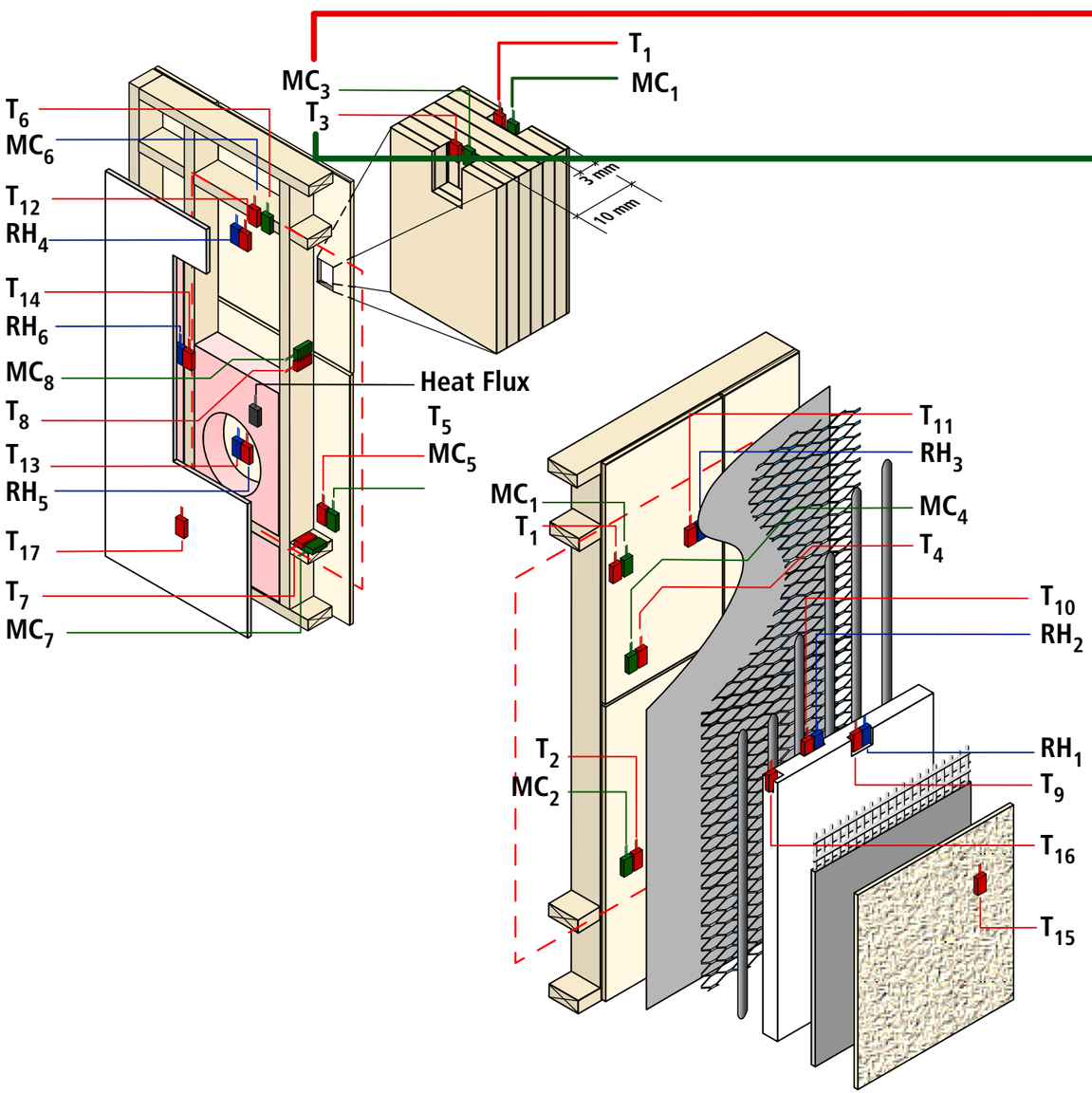
T_6
MC_6
T_{12}
RH_4
T_{14}
RH_6
MC_8
T_8
T_{13}
RH_5
T_{17}
T_7
MC_7
MC_3
T_3
T_1
MC_1
3 mm
10 mm
Heat Flux
T_5
MC_5
MC_1
T_1
T_{11}
RH_3
MC_4
T_4
T_{10}
RH_2
T_2
MC_2
RH_1
T_9
T_{16}
T_{15}

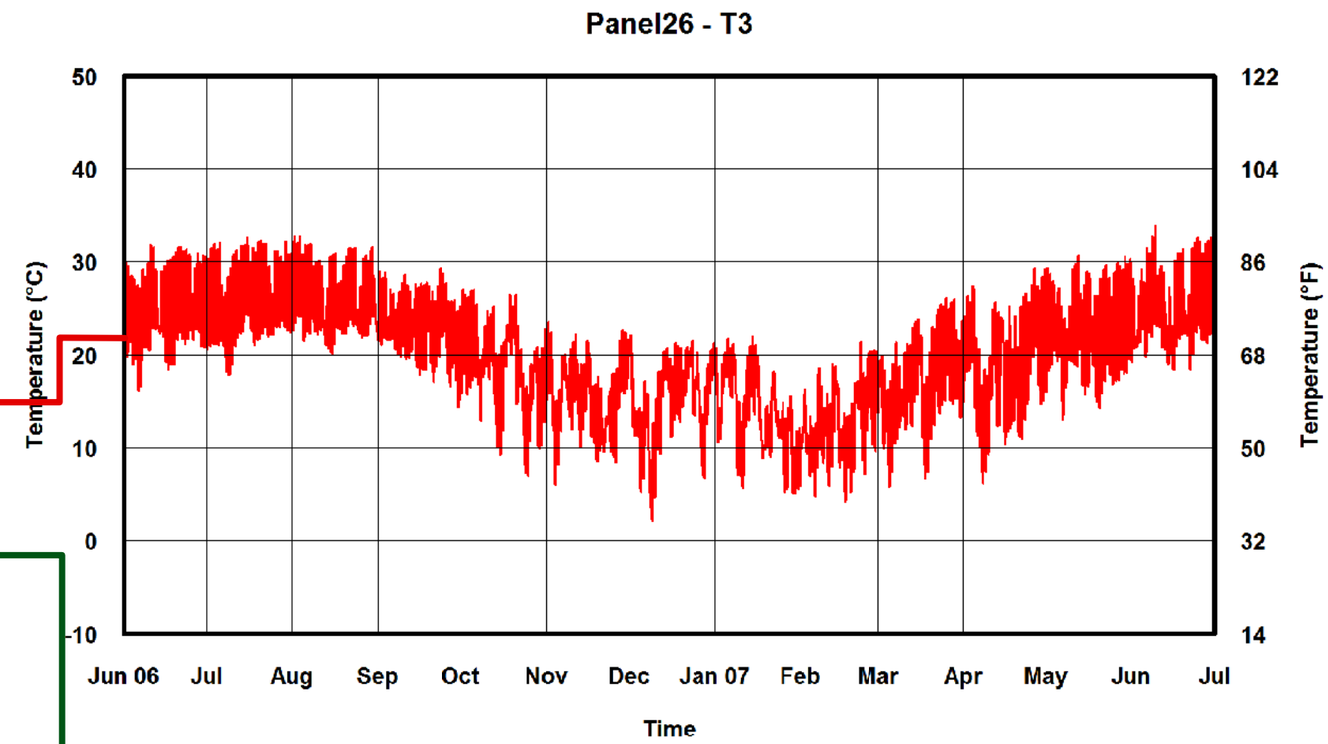
Panel26 - T3
Temperature (°C)
50
40
30
20
10
0
-10
Temperature (°F)
122
104
86
68
50
32
14
Jun 06
Jul
Aug
Sep
Oct
Nov
Dec
Jan 07
Feb
Mar
Apr
May
Jun
Jul
Time

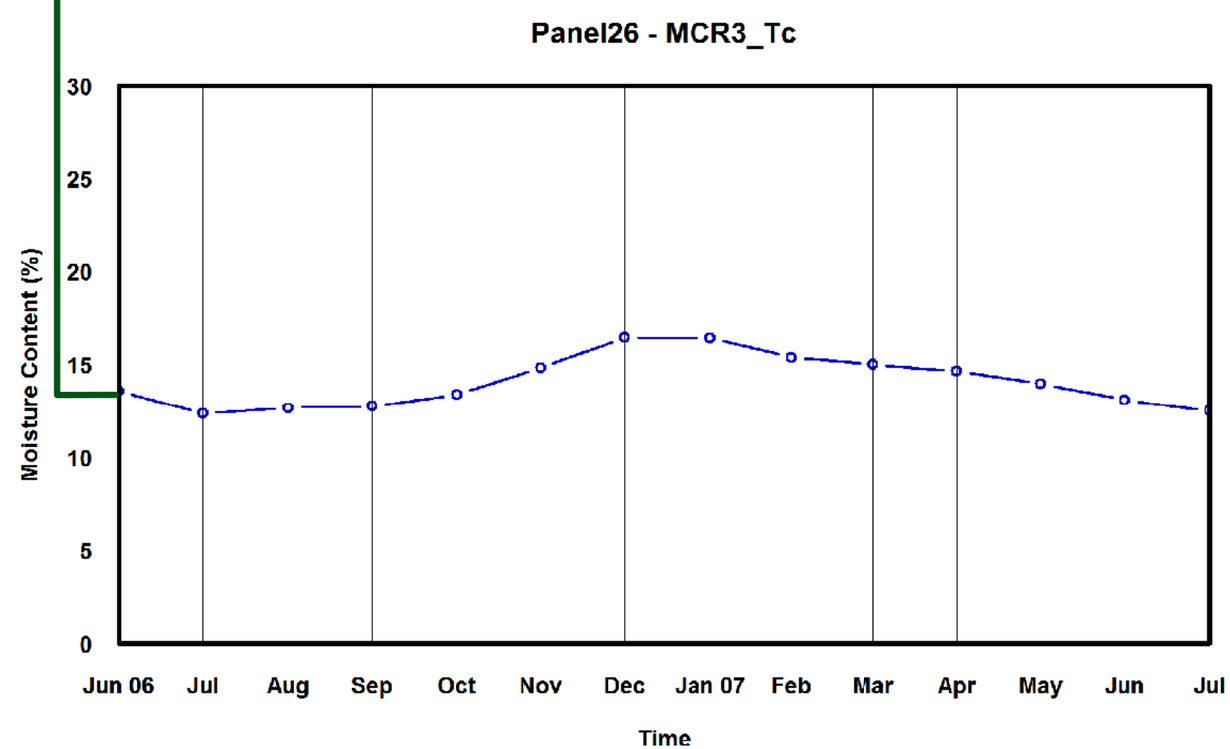
Panel26 - MCR3_Tc
Moisture Content (%)
30
25
20
15
10
5
0
Jun 06
Jul
Aug
Sep
Oct
Nov
Dec
Jan 07
Feb
Mar
Apr
May
Jun
Jul
Time

Panel 26

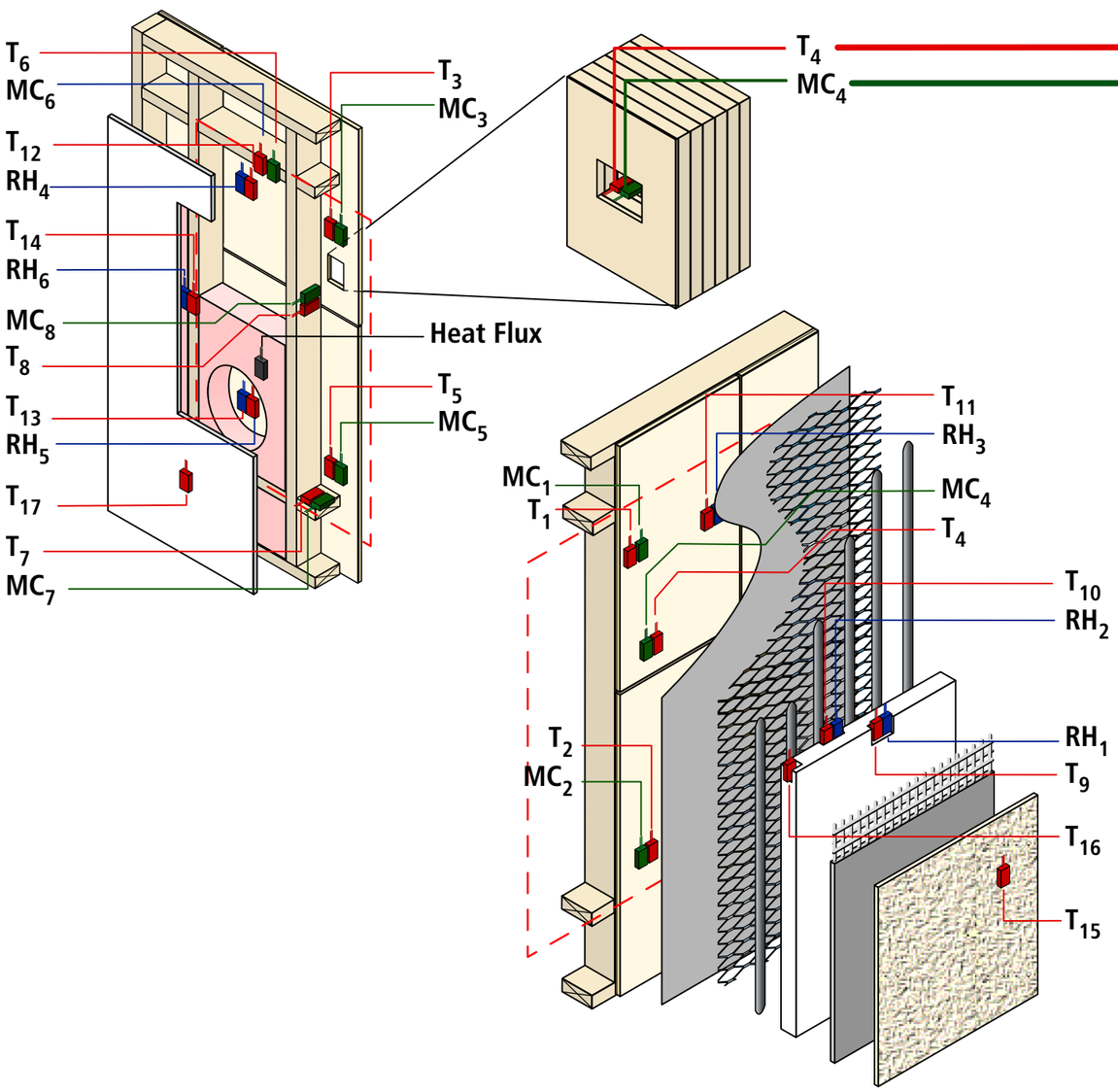
T_6
MC_6
T_{12}
RH_4
T_{14}
RH_6
MC_8
T_8
T_{13}
RH_5
T_{17}
T_7
MC_7
T_3
MC_3
Heat Flux
T_5
MC_5
T_4
MC_4
T_{11}
RH_3
MC_4
T_4
T_{10}
RH_2
RH_1
T_9
T_{16}
T_{15}
MC_1
T_1
T_2
MC_2

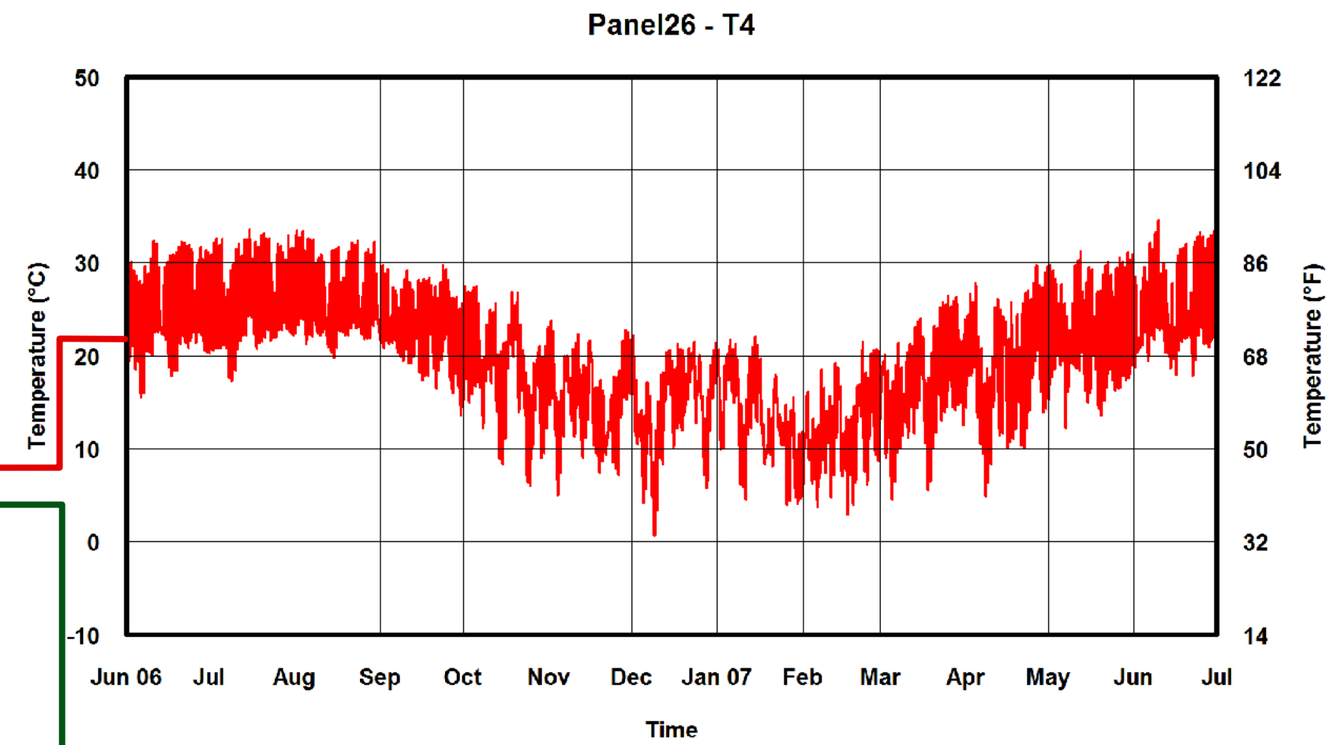
Panel26 - T4
Temperature (°C)
Temperature (°F)
50
40
30
20
10
0
-10
122
104
86
68
50
32
14
Jun 06
Jul
Aug
Sep
Oct
Nov
Dec
Jan 07
Feb
Mar
Apr
May
Jun
Jul
Time

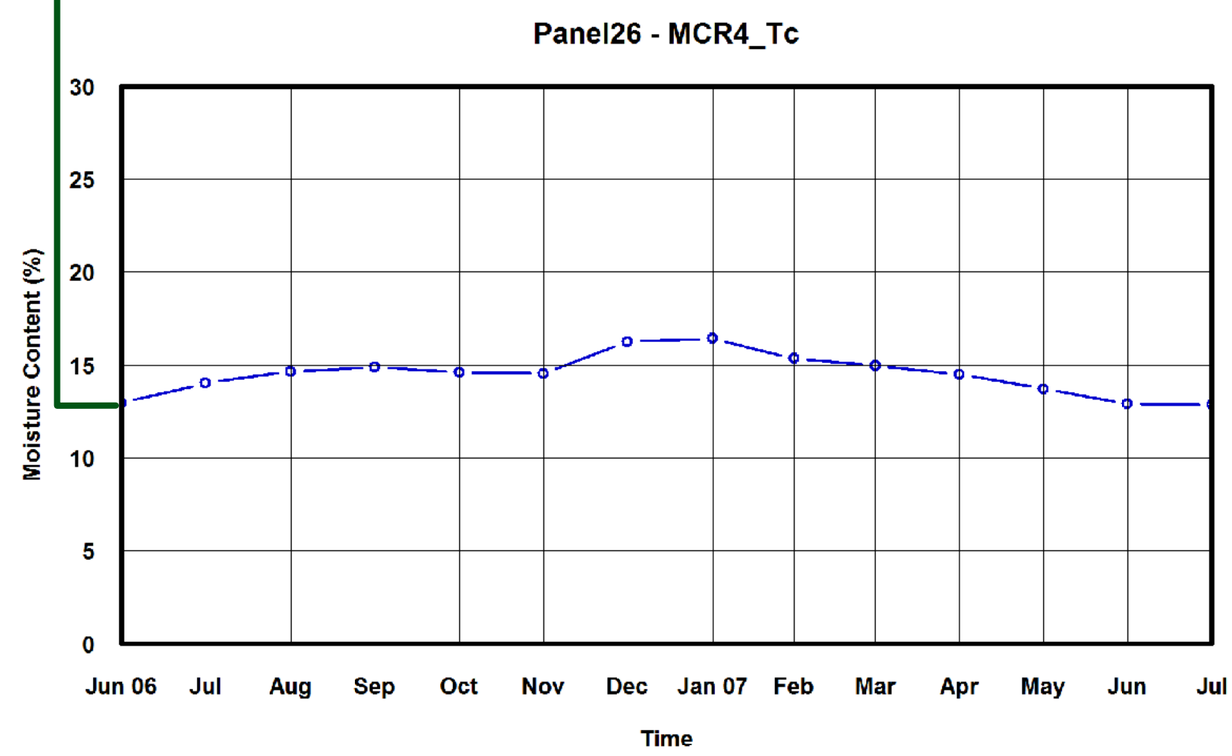
Panel26 - MCR4_Tc
Moisture Content (%)
30
25
20
15
10
5
0
Jun 06
Jul
Aug
Sep
Oct
Nov
Dec
Jan 07
Feb
Mar
Apr
May
Jun
Jul
Time

Panel 26

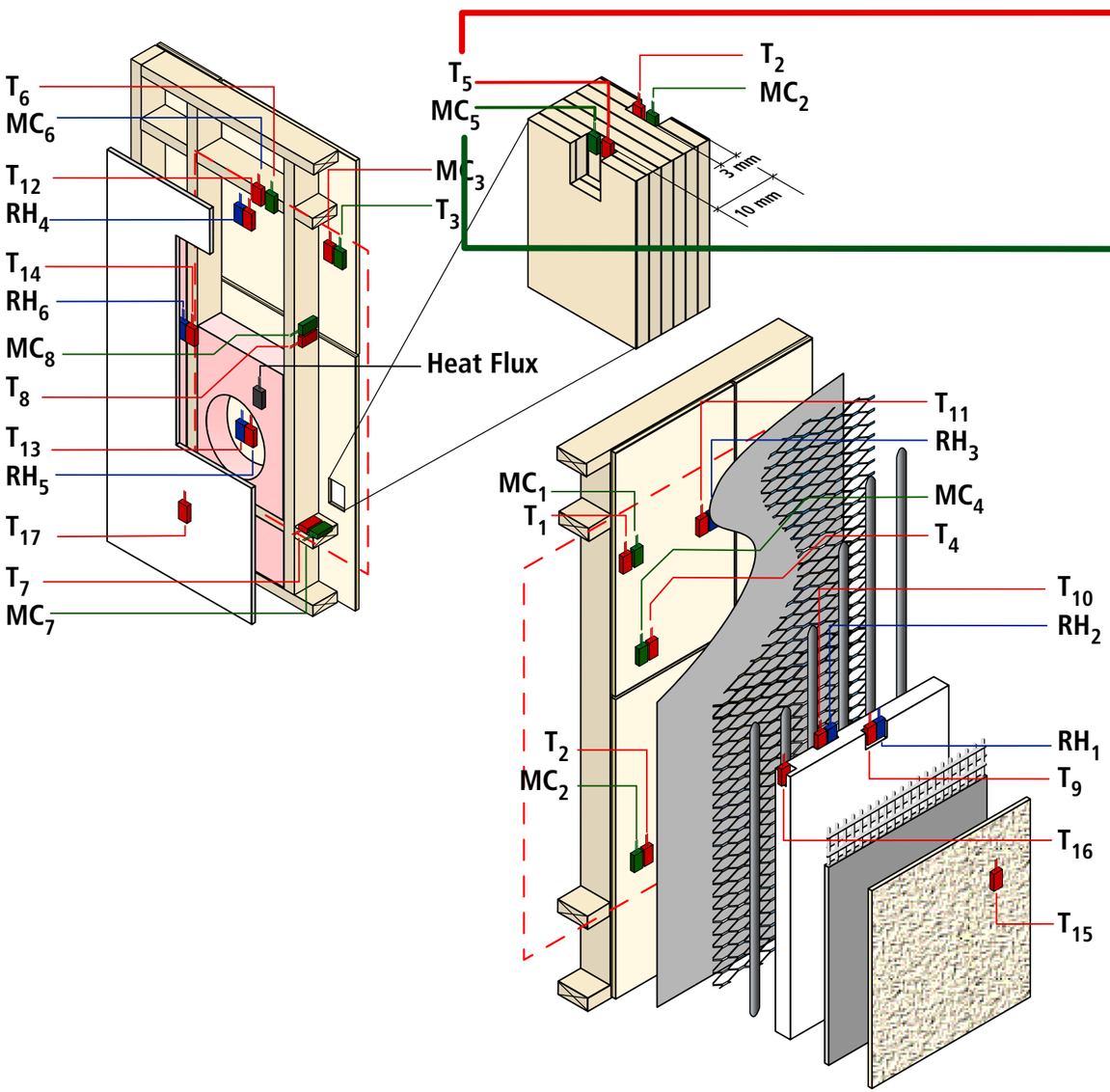
T_6
MC_6
T_{12}
RH_4
T_{14}
RH_6
MC_8
T_8
T_{13}
RH_5
T_{17}
T_7
MC_7
T_5
MC_5
MC_3
T_3
Heat Flux
T_2
MC_2
3 mm
10 mm
T_{11}
RH_3
MC_4
T_4
MC_1
T_1
T_{10}
RH_2
T_2
MC_2
RH_1
T_9
T_{16}
T_{15}

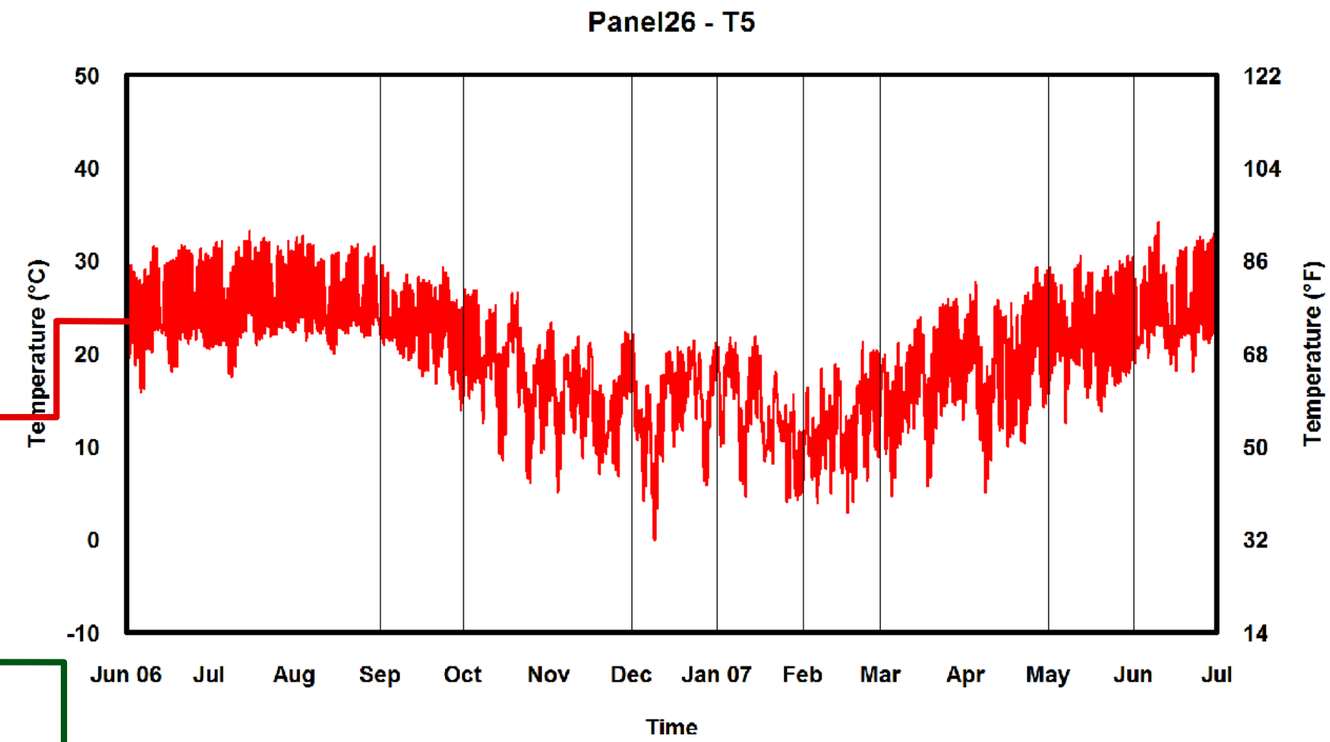
Panel26 - T5
Temperature (°C)
Temperature (°F)
50
40
30
20
10
0
-10
122
104
86
68
50
32
14
Jun 06
Jul
Aug
Sep
Oct
Nov
Dec
Jan 07
Feb
Mar
Apr
May
Jun
Jul
Time

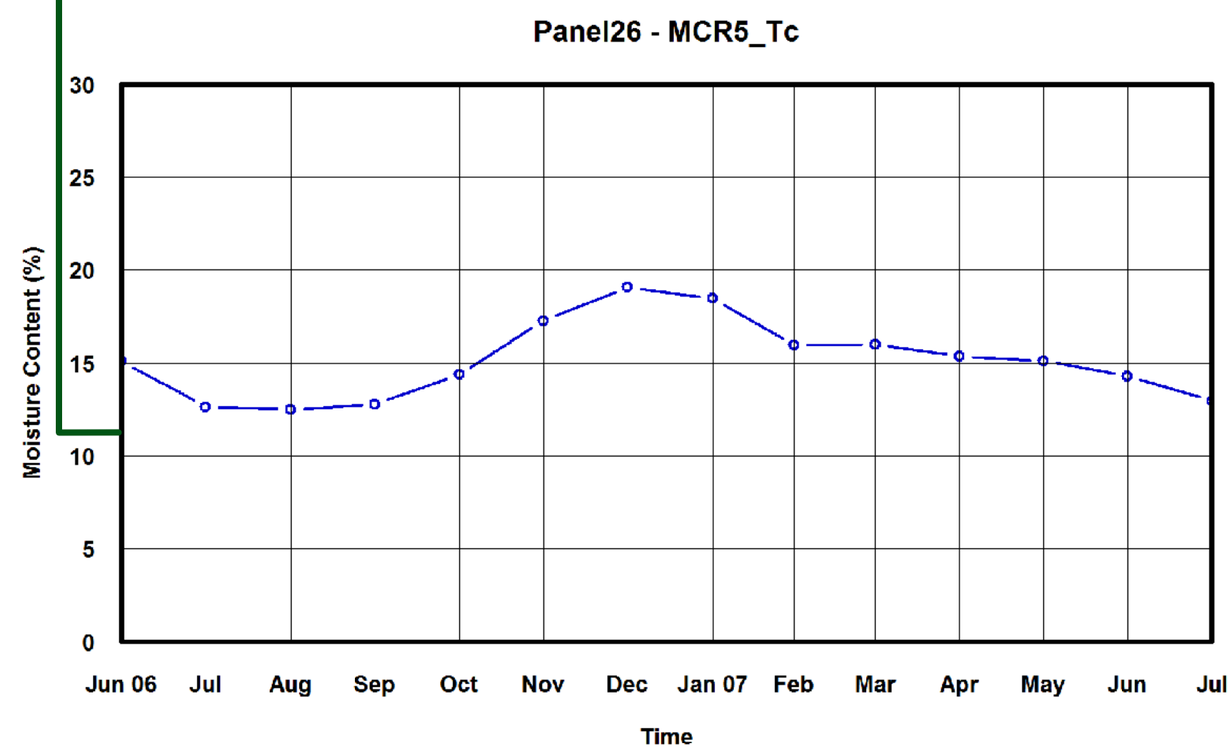
Panel26 - MCR5_Tc
Moisture Content (%)
30
25
20
15
10
5
0
Jun 06
Jul
Aug
Sep
Oct
Nov
Dec
Jan 07
Feb
Mar
Apr
May
Jun
Jul
Time

Panel 26

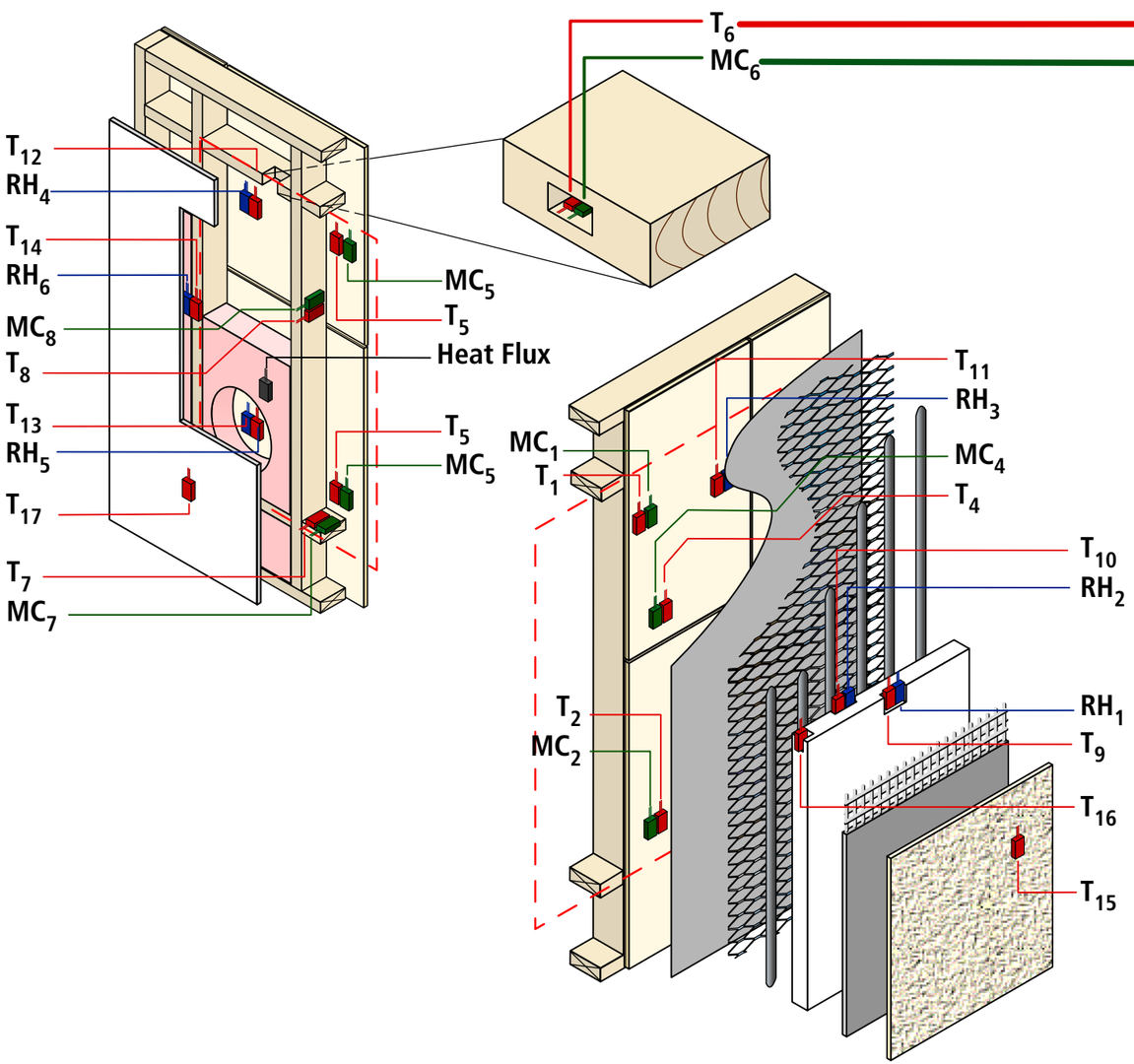
T_6
MC_6
T_{12}
RH_4
T_{14}
RH_6
MC_8
T_8
T_{13}
RH_5
T_{17}
T_7
MC_7
MC_5
T_5
Heat Flux
T_5
MC_5
MC_1
T_1
T_{11}
RH_3
MC_4
T_4
T_{10}
RH_2
T_2
MC_2
RH_1
T_9
T_{16}
T_{15}

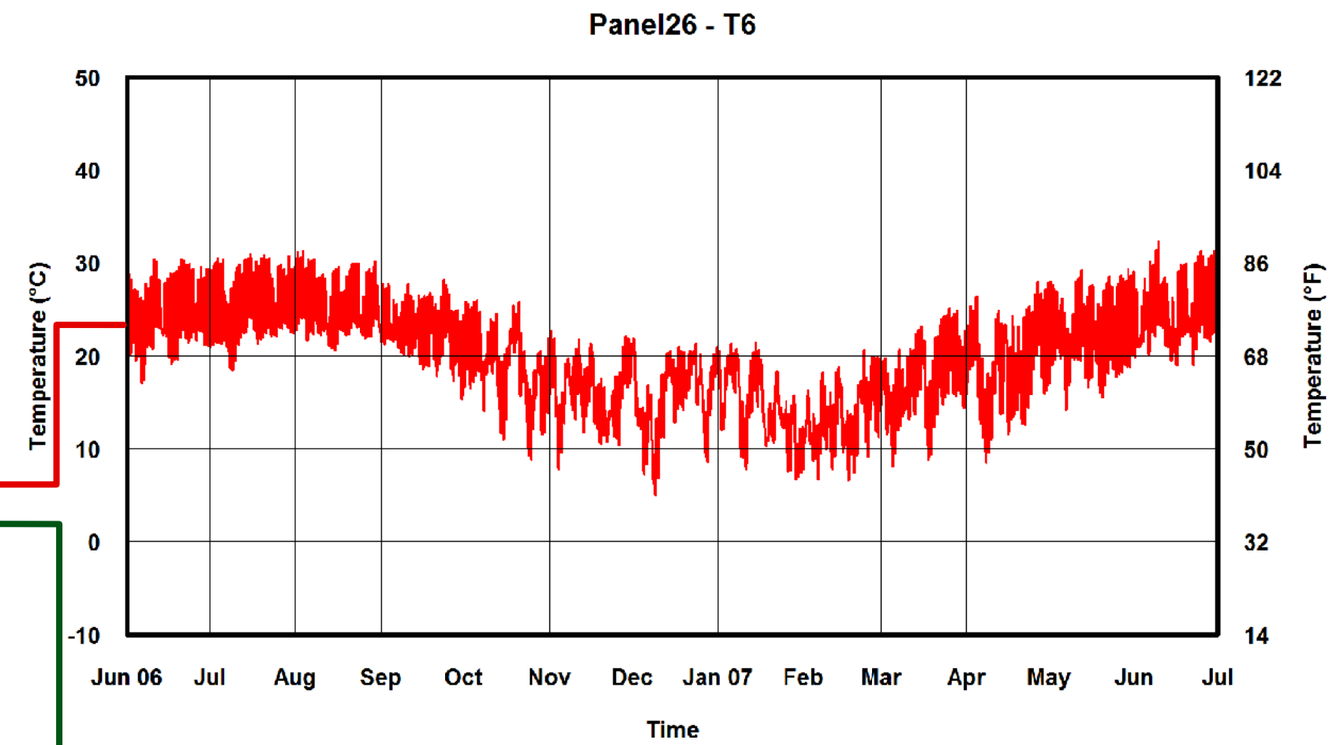
Panel26 - T6
Temperature (°C)
50
40
30
20
10
0
-10
Temperature (°F)
122
104
86
68
50
32
14
Jun 06
Jul
Aug
Sep
Oct
Nov
Dec
Jan 07
Feb
Mar
Apr
May
Jun
Jul
Time

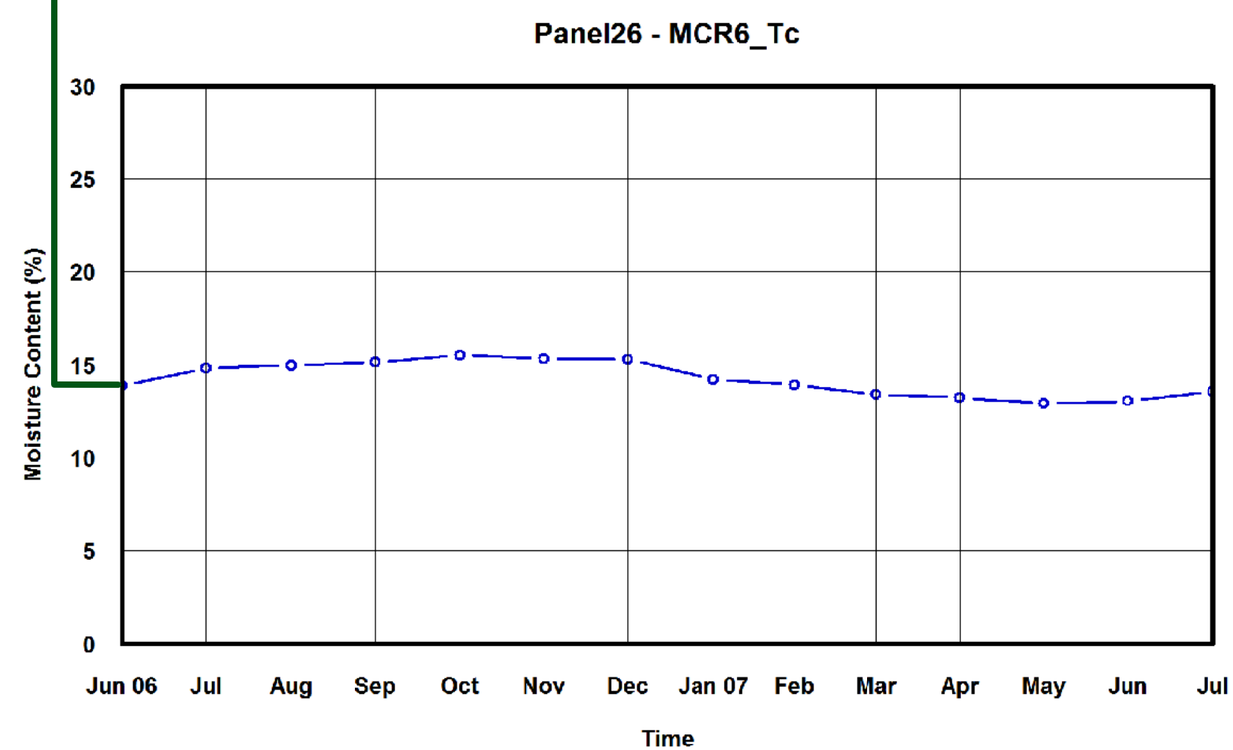
Panel26 - MCR6_Tc
Moisture Content (%)
30
25
20
15
10
5
0
Jun 06
Jul
Aug
Sep
Oct
Nov
Dec
Jan 07
Feb
Mar
Apr
May
Jun
Jul
Time

Panel 26

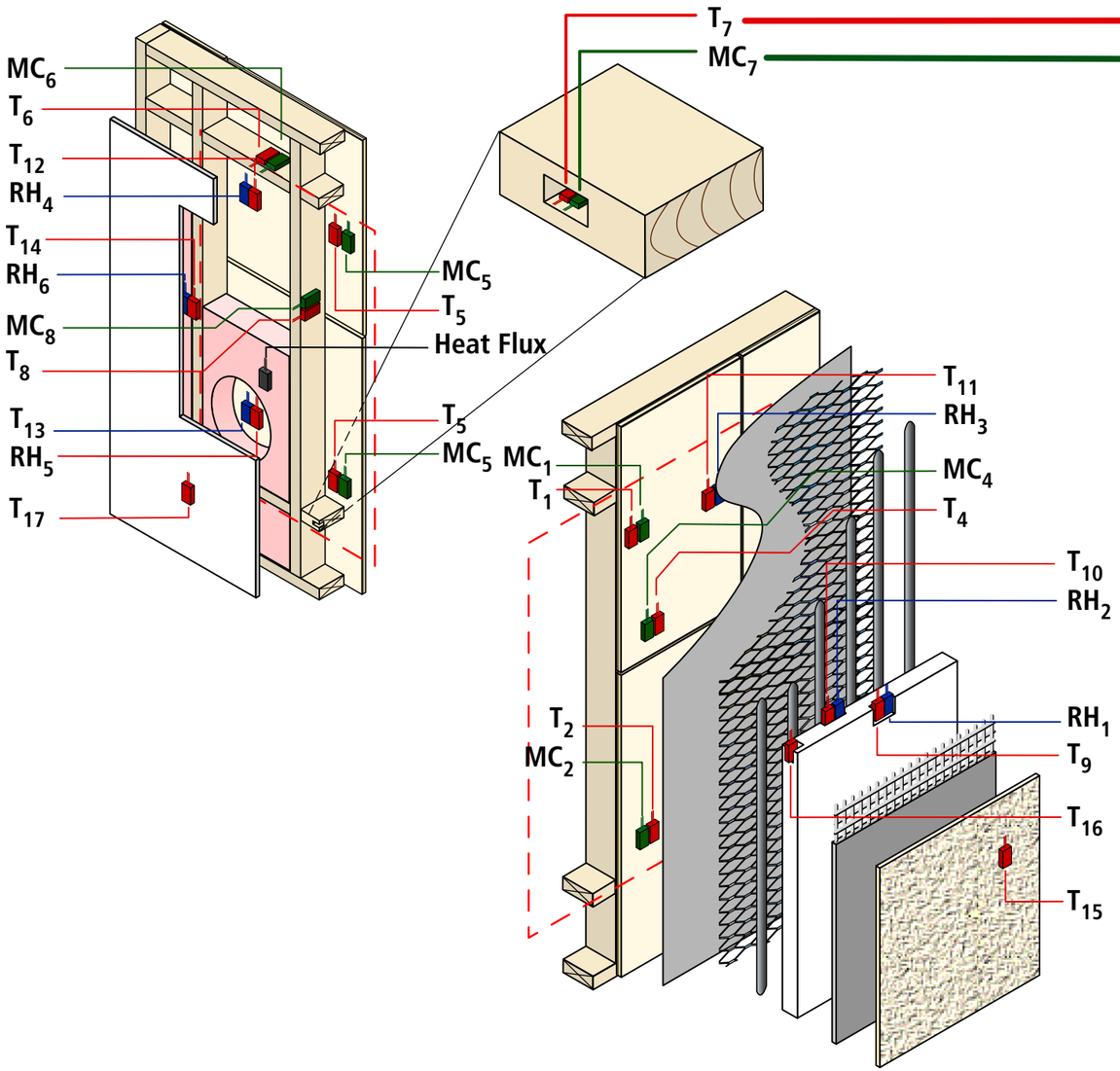
MC6
T6
T12
RH4
T14
RH6
MC8
T8
T13
RH5
T17
T7
MC7
MC5
T5
Heat Flux
T5
MC5
MC1
T1
T11
RH3
MC4
T4
T10
RH2
T2
MC2
RH1
T9
T16
T15

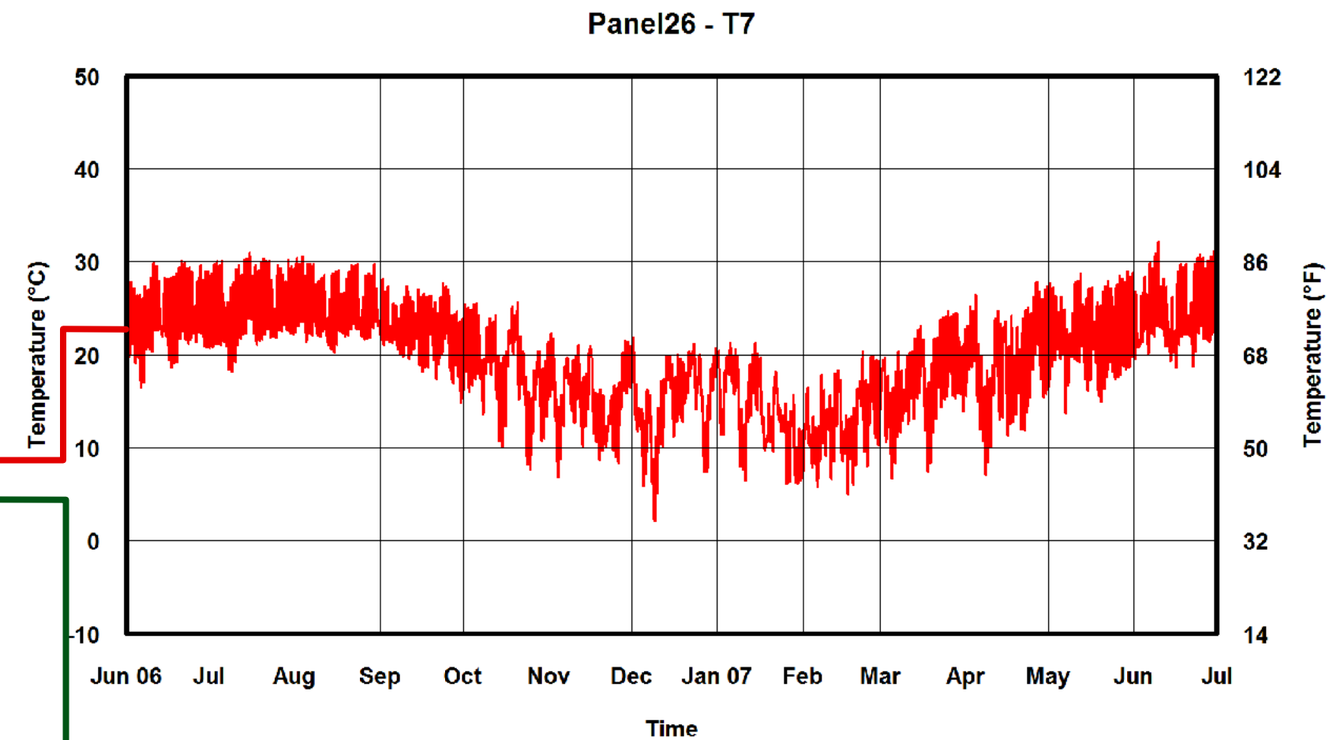
Panel26 - T7
Temperature (°C)
Temperature (°F)
50
40
30
20
10
0
-10
122
104
86
68
50
32
14
Jun 06
Jul
Aug
Sep
Oct
Nov
Dec
Jan 07
Feb
Mar
Apr
May
Jun
Jul
Time

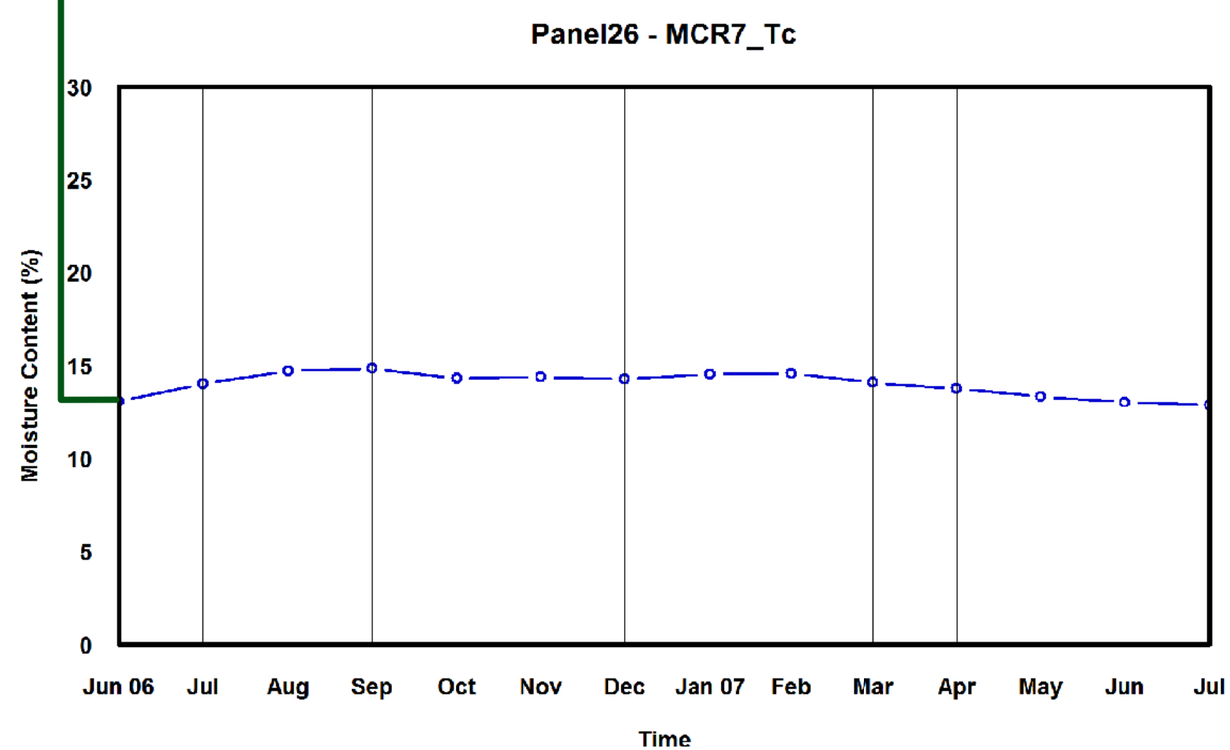
Panel26 - MCR7_Tc
Moisture Content (%)
30
25
20
15
10
5
0
Jun 06
Jul
Aug
Sep
Oct
Nov
Dec
Jan 07
Feb
Mar
Apr
May
Jun
Jul
Time

Panel 26

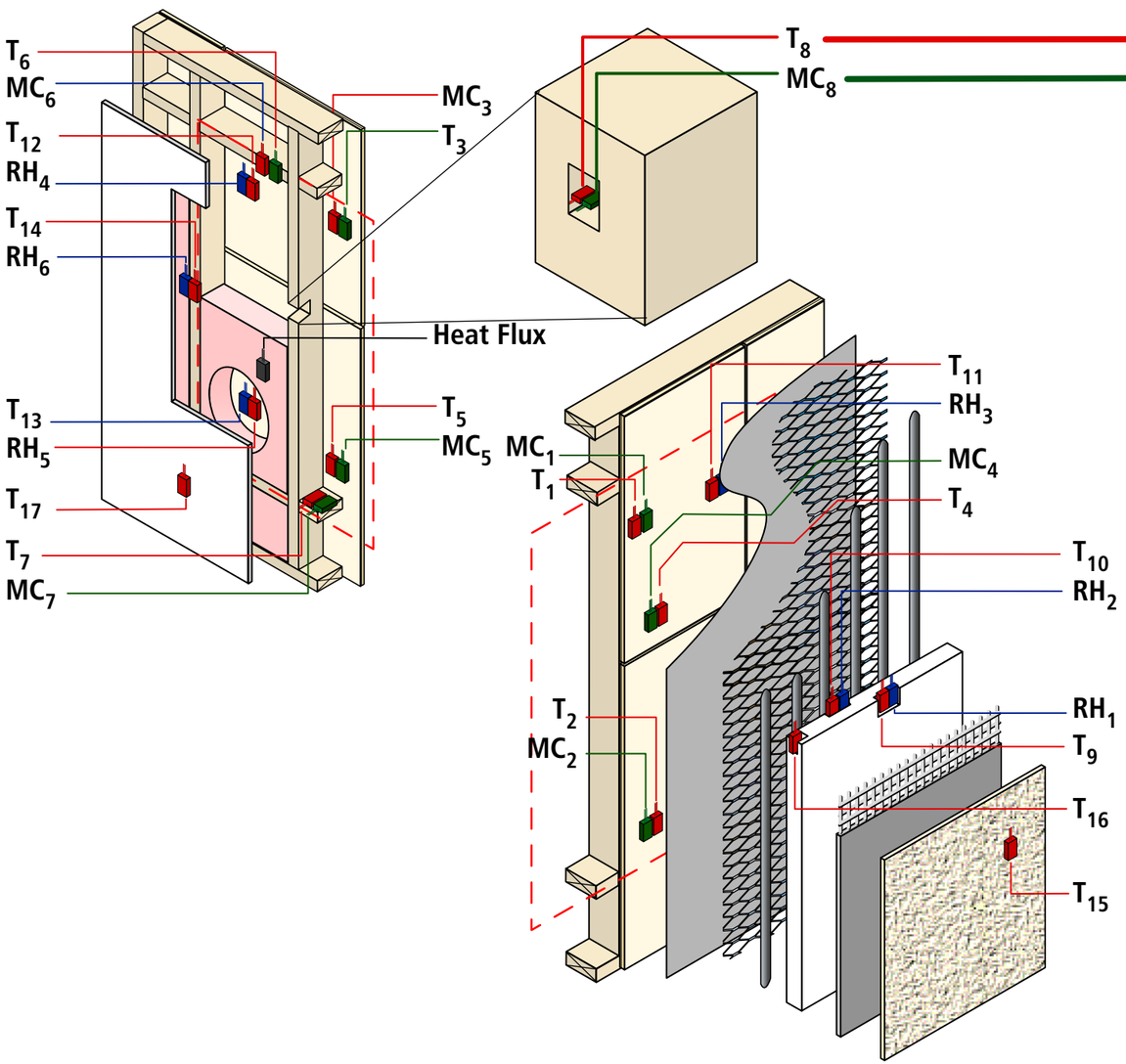
T_6
MC_6
T_{12}
RH_4
T_{14}
RH_6
T_{13}
RH_5
T_{17}
T_7
MC_7
MC_3
T_3
Heat Flux
T_5
MC_5
T_8
MC_8
MC_1
T_1
T_{11}
RH_3
MC_4
T_4
T_{10}
RH_2
T_2
MC_2
RH_1
T_9
T_{16}
T_{15}

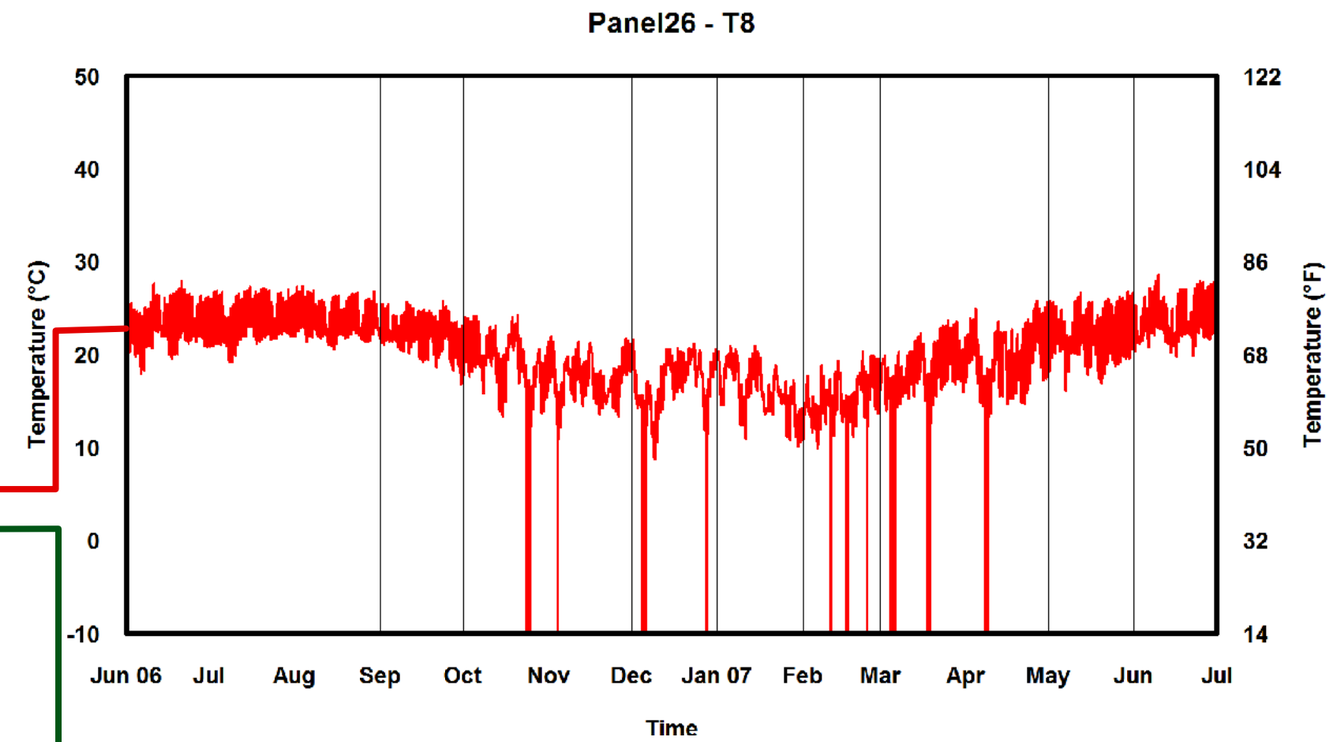
Panel26 - T8
Temperature (°C)
Temperature (°F)
50
40
30
20
10
0
-10
122
104
86
68
50
32
14
Jun 06
Jul
Aug
Sep
Oct
Nov
Dec
Jan 07
Feb
Mar
Apr
May
Jun
Jul
Time

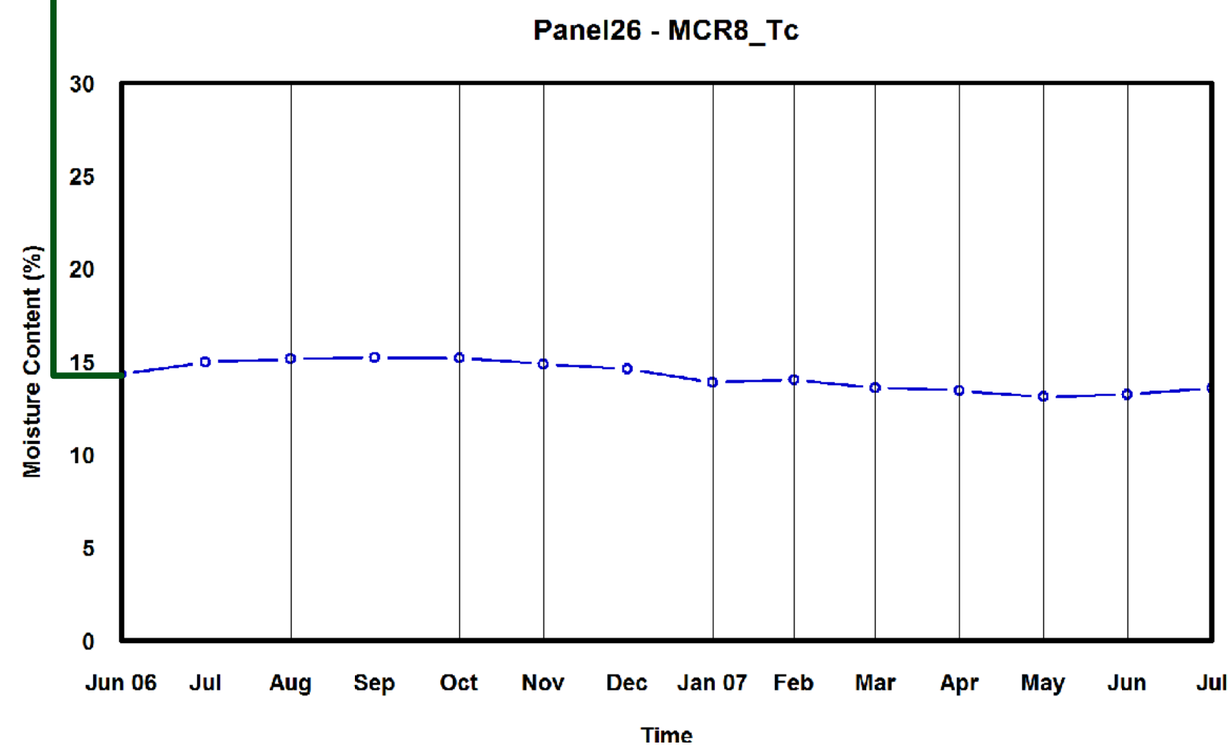
Panel26 - MCR8_Tc
Moisture Content (%)
30
25
20
15
10
5
0
Jun 06
Jul
Aug
Sep
Oct
Nov
Dec
Jan 07
Feb
Mar
Apr
May
Jun
Jul
Time

Panel 26

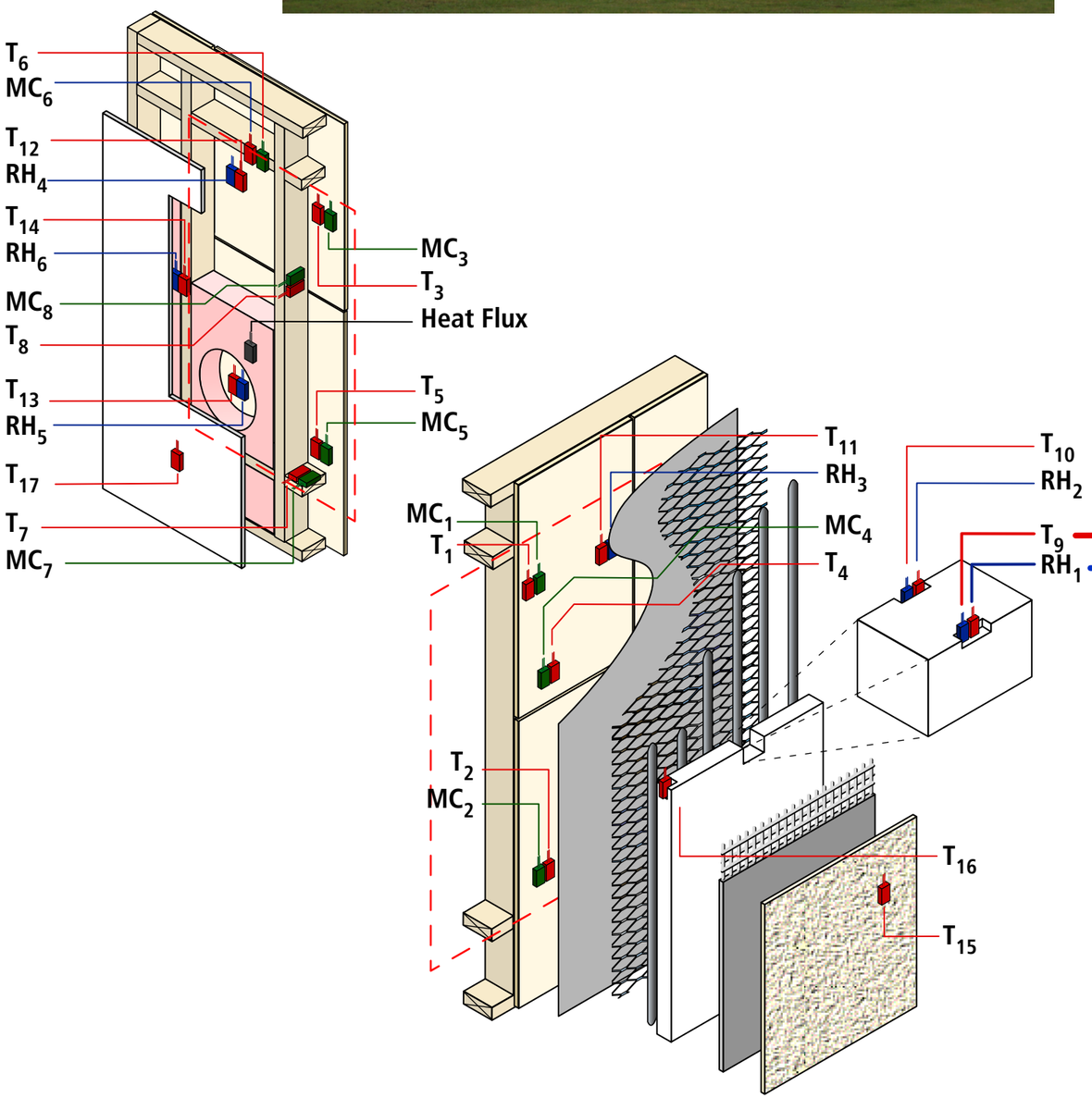
T_6
MC_6
T_{12}
RH_4
T_{14}
RH_6
MC_8
T_8
T_{13}
RH_5
T_{17}
T_7
MC_7
MC_3
T_3
Heat Flux
T_5
MC_5
T_{11}
RH_3
MC_1
T_1
MC_4
T_4
T_2
MC_2
T_{10}
RH_2
T_9
RH_1
T_{16}
T_{15}

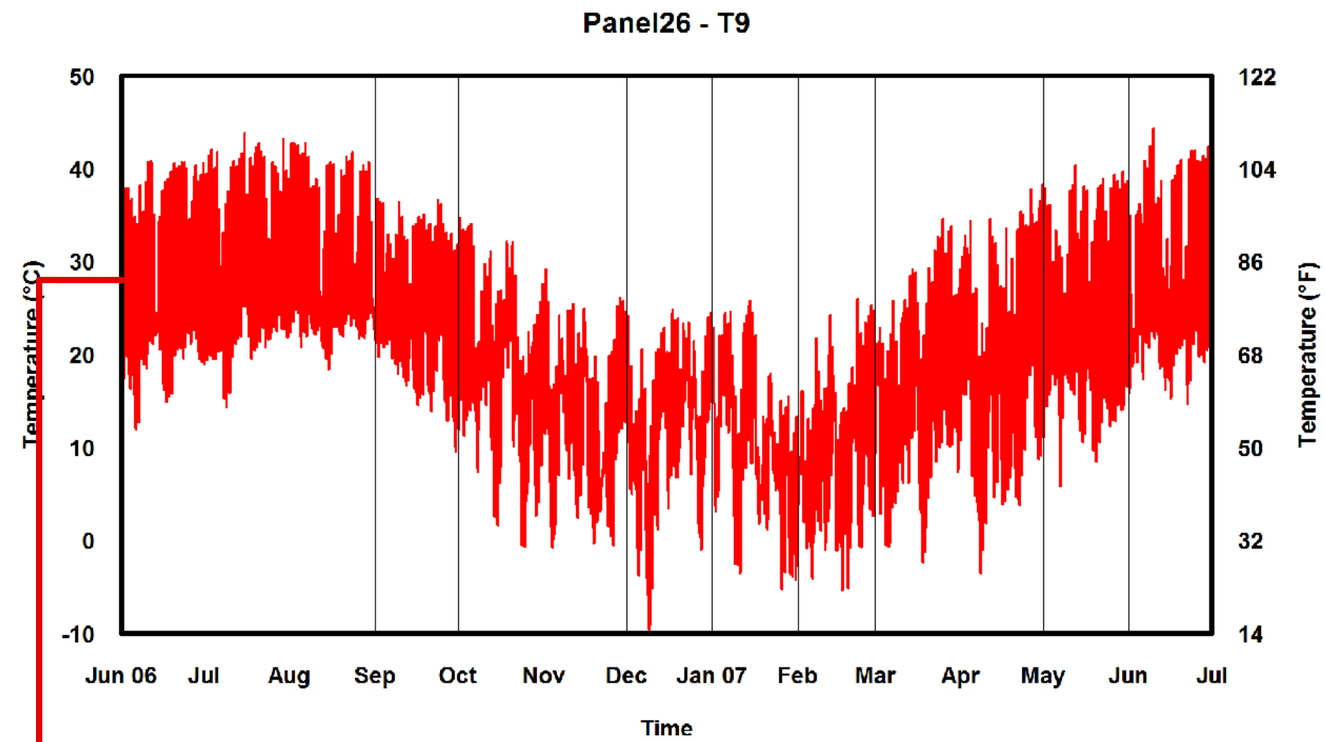
Panel26 - T9
Temperature (°C)
Temperature (°F)
50
40
30
20
10
0
-10
122
104
86
68
50
32
14
Jun 06
Jul
Aug
Sep
Oct
Nov
Dec
Jan 07
Feb
Mar
Apr
May
Jun
Jul
Time

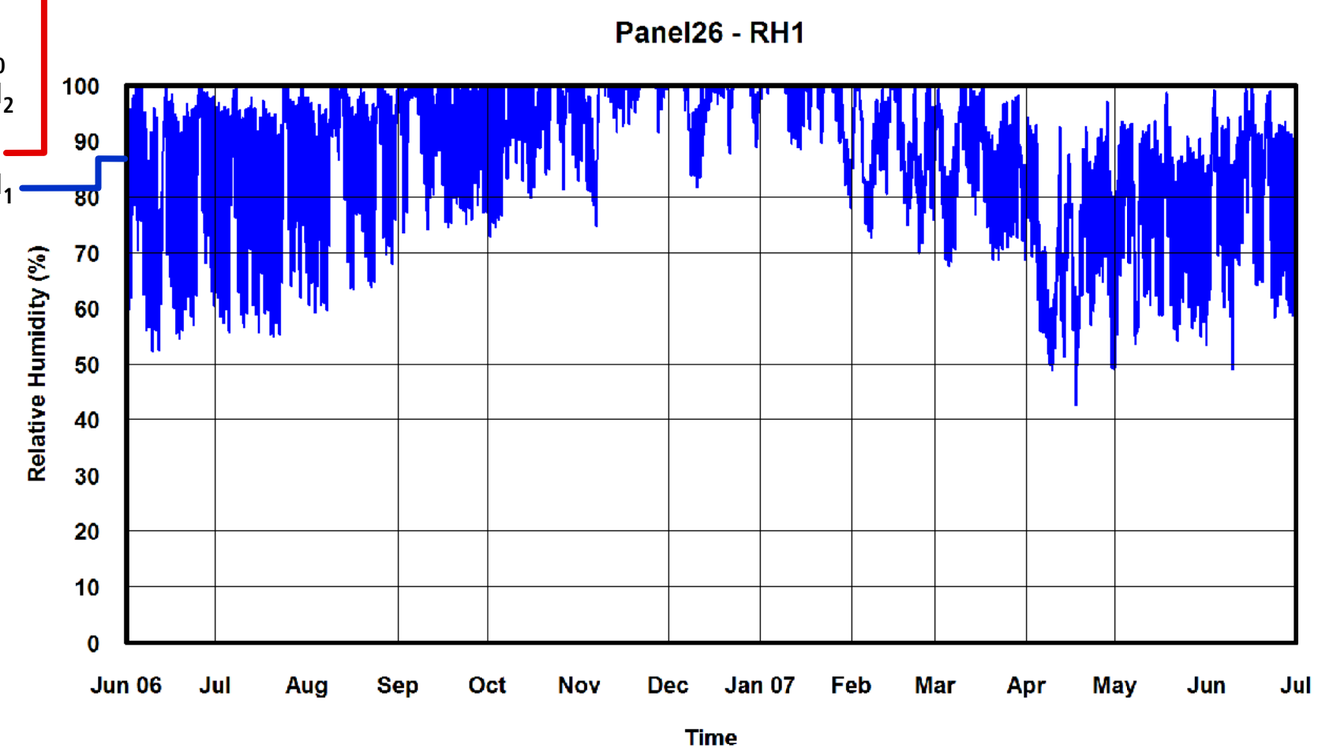
Panel26 - RH1
Relative Humidity (%)
100
90
80
70
60
50
40
30
20
10
0
Jun 06
Jul
Aug
Sep
Oct
Nov
Dec
Jan 07
Feb
Mar
Apr
May
Jun
Jul
Time

Panel 26

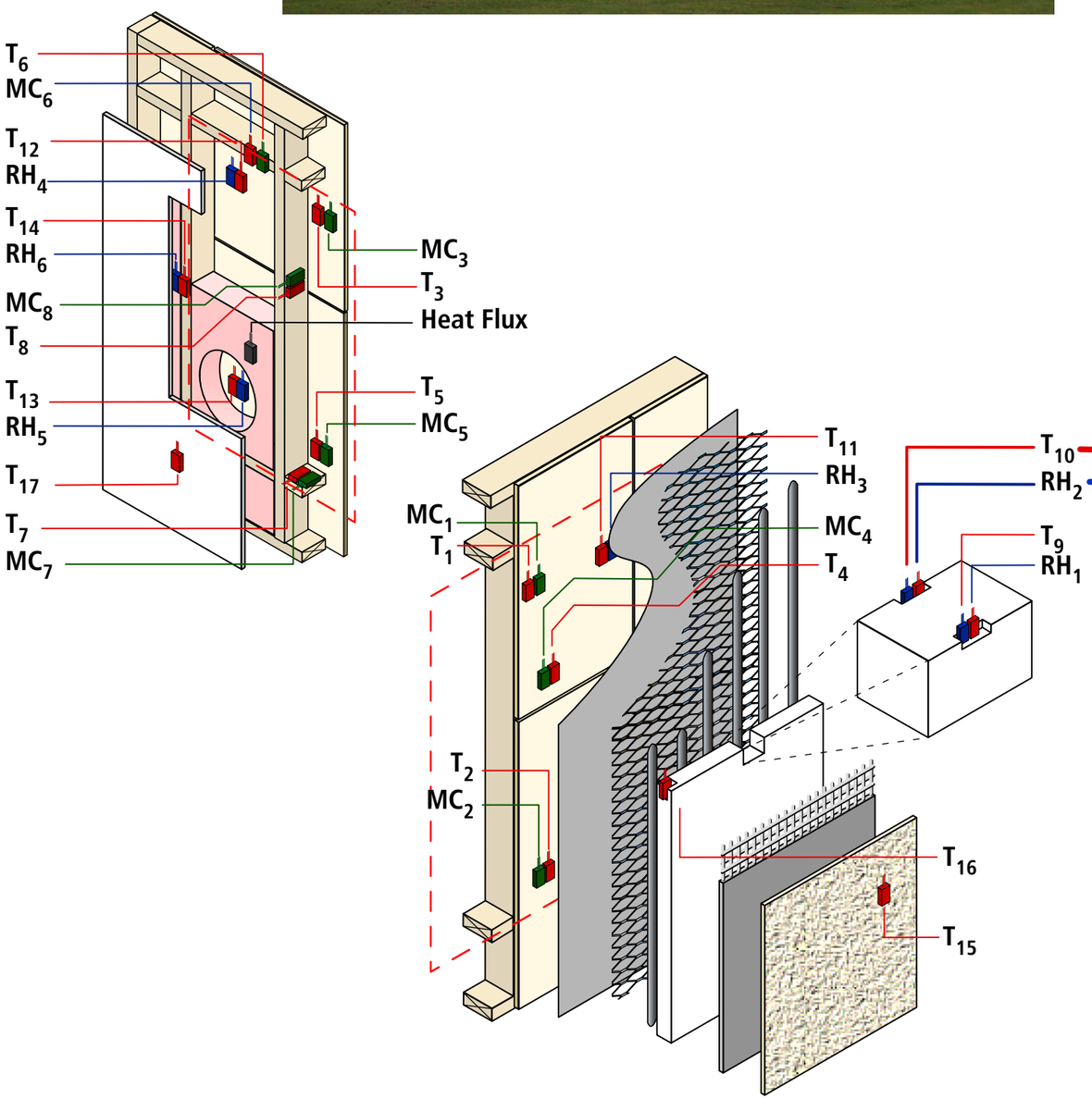
T_6
MC_6
T_{12}
RH_4
T_{14}
RH_6
MC_8
T_8
T_{13}
RH_5
T_{17}
T_7
MC_7
MC_3
T_3
Heat Flux
T_5
MC_5
T_{11}
RH_3
MC_4
T_4
MC_1
T_1
T_2
MC_2
T_{10}
RH_2
T_9
RH_1
T_{16}
T_{15}

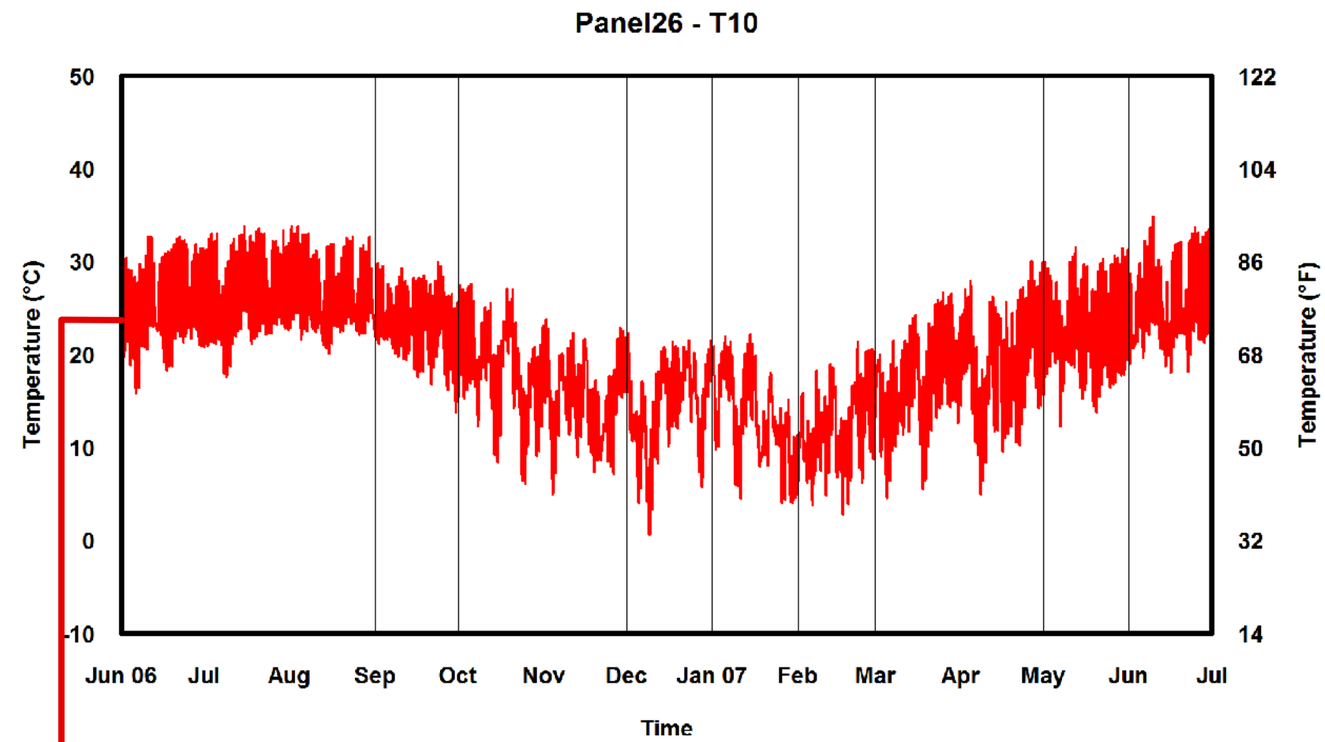
Panel26 - T10
Temperature (°C)
Temperature (°F)
50
40
30
20
10
0
-10
122
104
86
68
50
32
14
Jun 06
Jul
Aug
Sep
Oct
Nov
Dec
Jan 07
Feb
Mar
Apr
May
Jun
Jul
Time

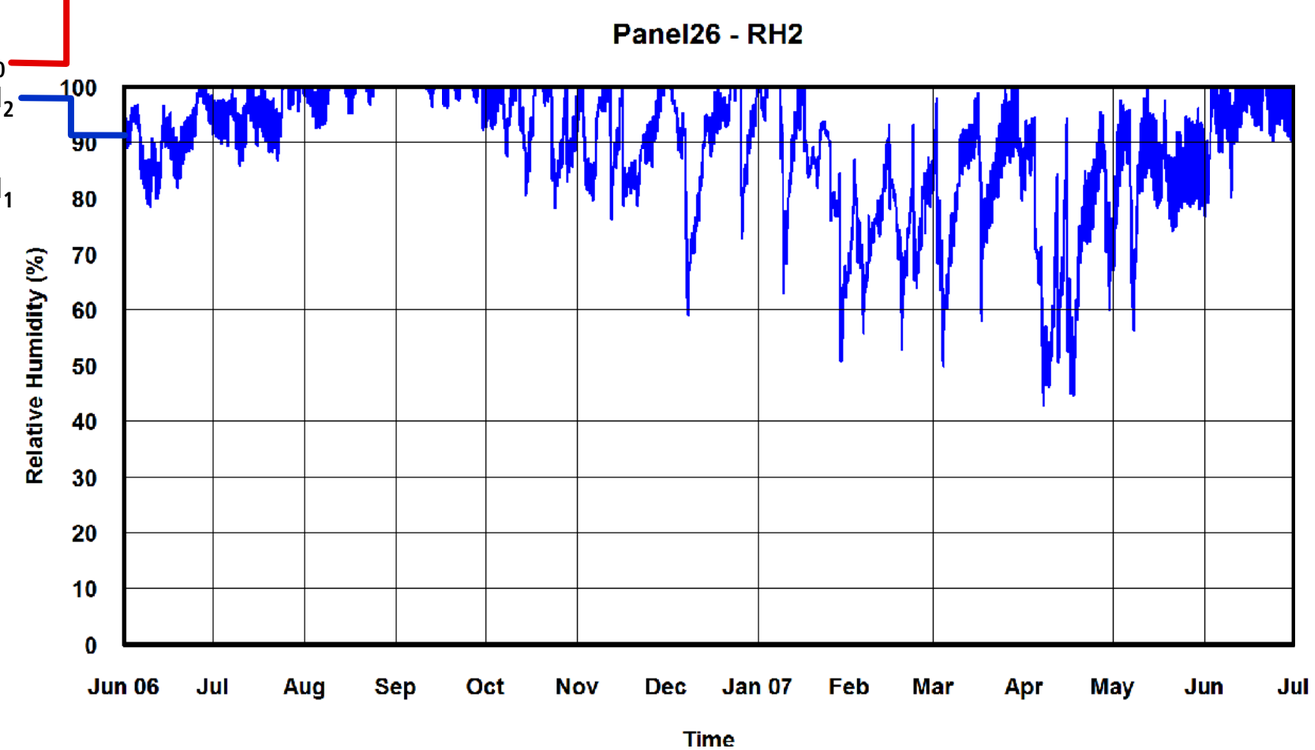
Panel26 - RH2
Relative Humidity (%)
100
90
80
70
60
50
40
30
20
10
0
Jun 06
Jul
Aug
Sep
Oct
Nov
Dec
Jan 07
Feb
Mar
Apr
May
Jun
Jul
Time

Panel 26

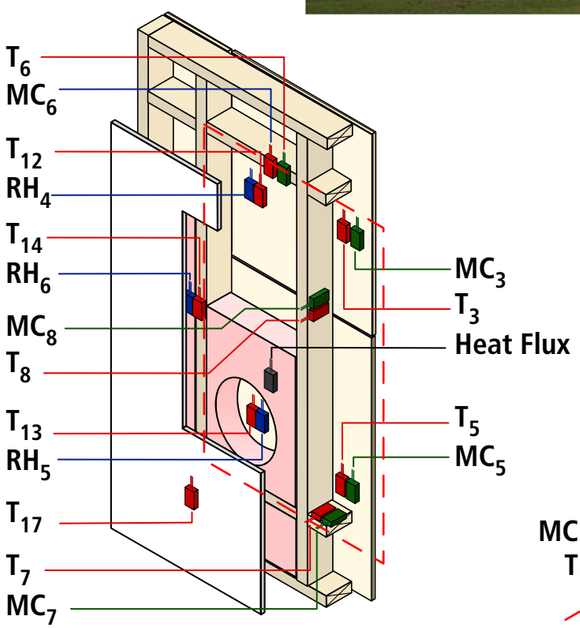
T_6
MC_6
T_{12}
RH_4
T_{14}
RH_6
MC_8
T_8
T_{13}
RH_5
T_{17}
T_7
MC_7
MC_3
T_3
Heat Flux
T_5
MC_5

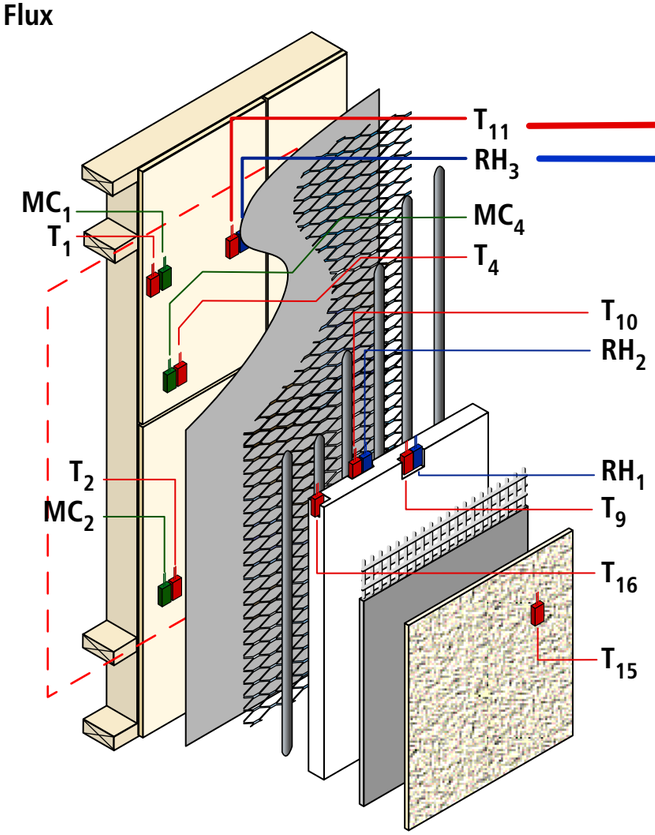
T_{11}
RH_3
MC_1
T_1
MC_4
T_4
T_{10}
RH_2
T_2
MC_2
RH_1
T_9
T_{16}
T_{15}

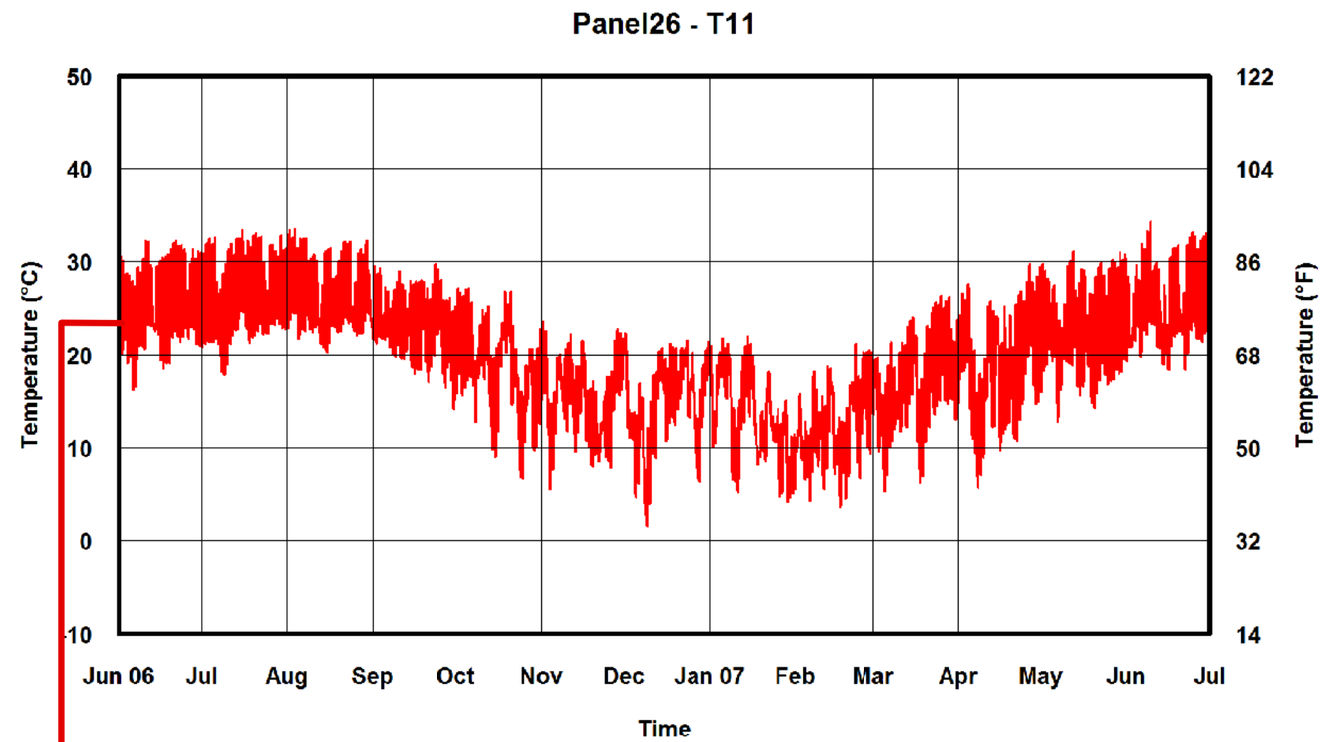
Panel26 - T11
Temperature (°C)
50
40
30
20
10
0
-10
Temperature (°F)
122
104
86
68
50
32
14
Jun 06
Jul
Aug
Sep
Oct
Nov
Dec
Jan 07
Feb
Mar
Apr
May
Jun
Jul
Time

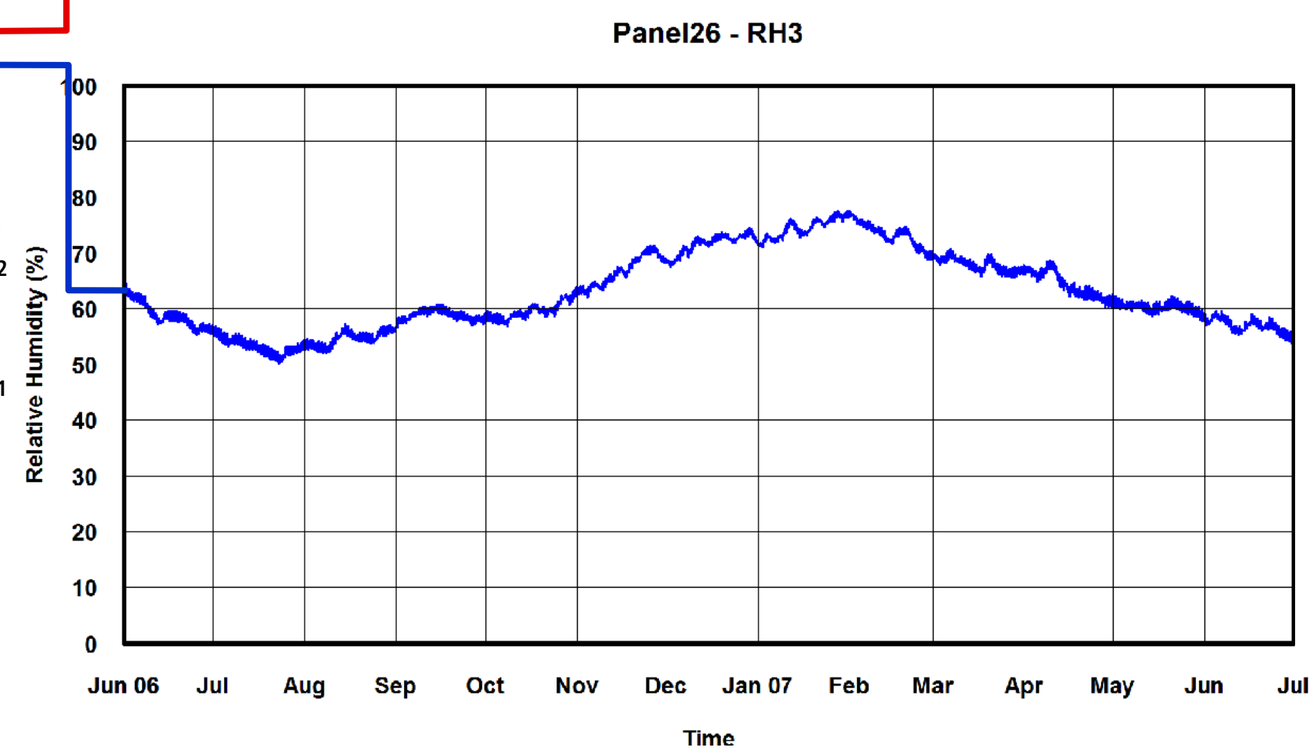
Panel26 - RH3
Relative Humidity (%)
100
90
80
70
60
50
40
30
20
10
0
Jun 06
Jul
Aug
Sep
Oct
Nov
Dec
Jan 07
Feb
Mar
Apr
May
Jun
Jul
Time

Panel 26

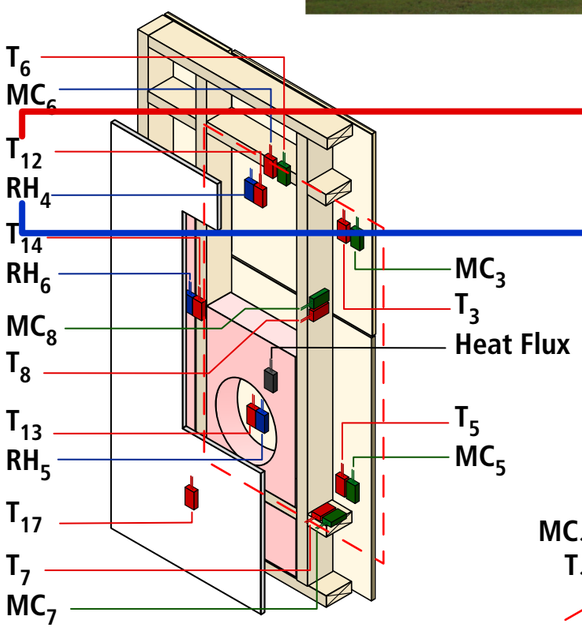
T_6
MC_6
T_{12}
RH_4
T_{14}
RH_6
MC_8
T_8
T_{13}
RH_5
T_{17}
T_7
MC_7
MC_3
T_3
Heat Flux
T_5
MC_5

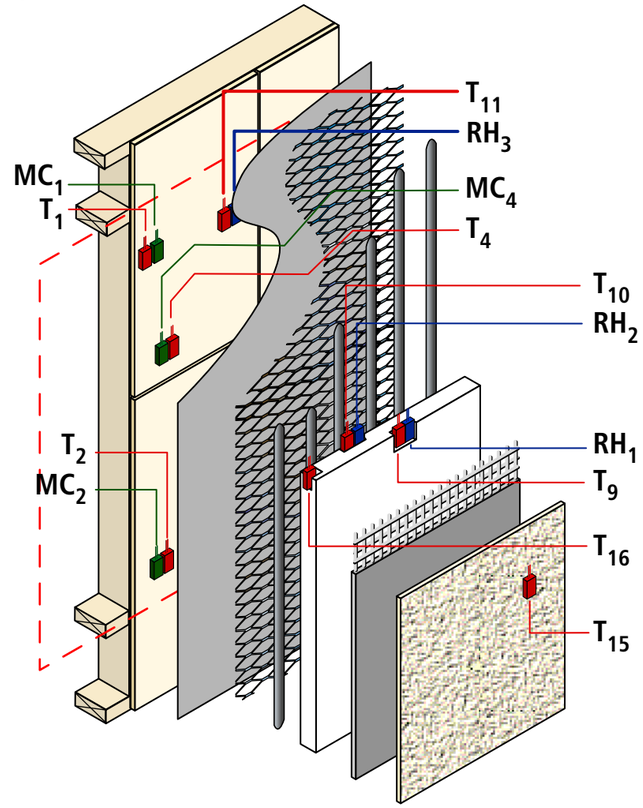
MC_1
T_1
T_2
MC_2
T_{11}
RH_3
MC_4
T_4
T_{10}
RH_2
RH_1
T_9
T_{16}
T_{15}

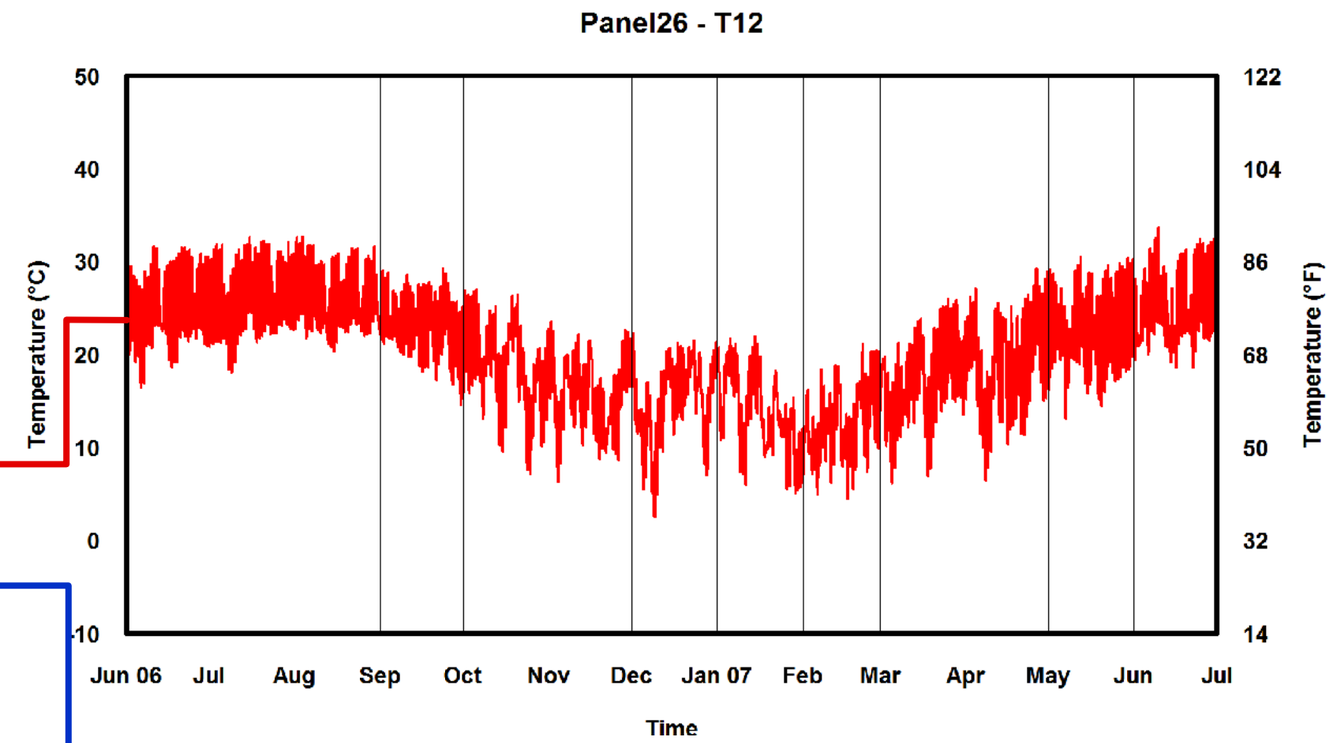
Panel26 - T12
Temperature (°C)
Temperature (°F)
50
40
30
20
10
0
-10
122
104
86
68
50
32
14
Jun 06
Jul
Aug
Sep
Oct
Nov
Dec
Jan 07
Feb
Mar
Apr
May
Jun
Jul
Time

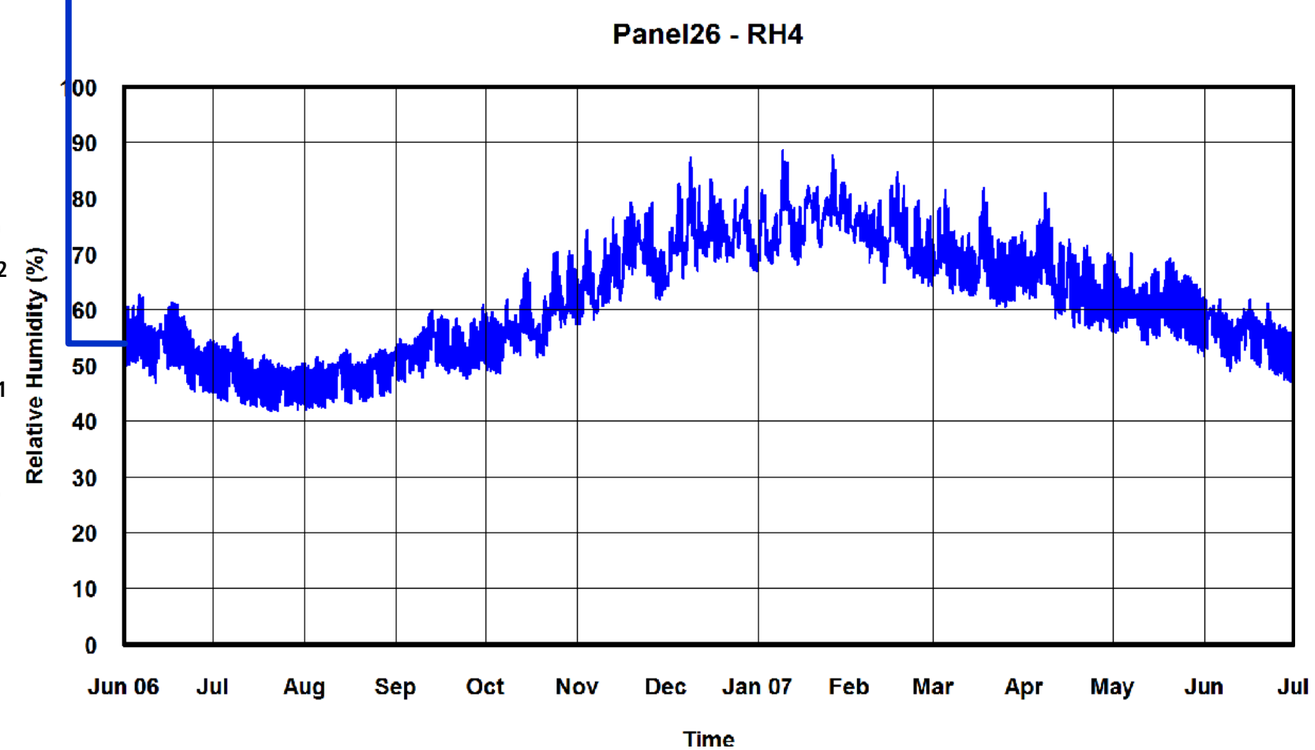
Panel26 - RH4
Relative Humidity (%)
100
90
80
70
60
50
40
30
20
10
0
Jun 06
Jul
Aug
Sep
Oct
Nov
Dec
Jan 07
Feb
Mar
Apr
May
Jun
Jul
Time

Panel 26

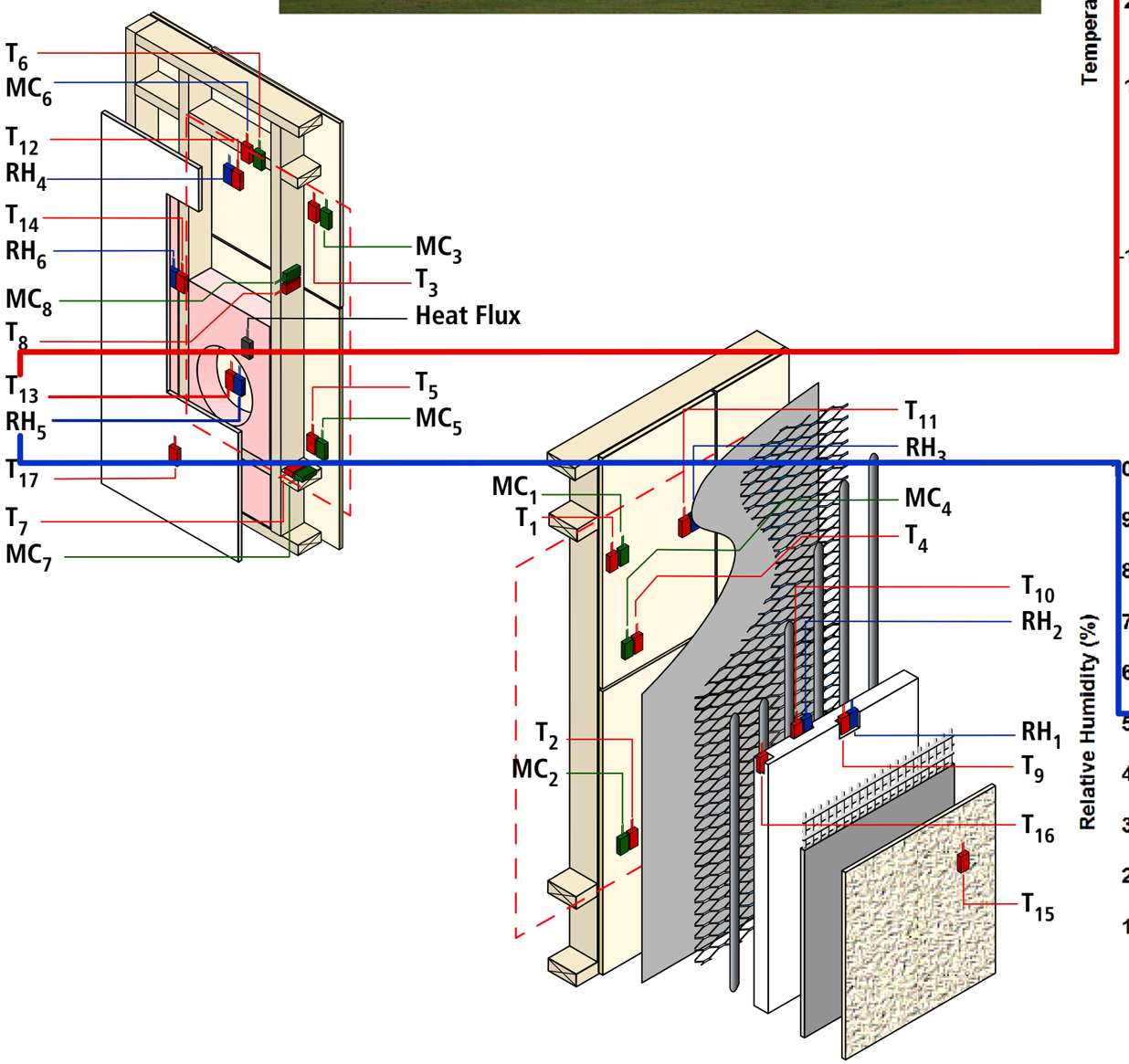
T_6
MC_6
T_{12}
RH_4
T_{14}
RH_6
MC_8
T_8
T_{13}
RH_5
T_{17}
T_7
MC_7
MC_3
T_3
Heat Flux
T_5
MC_5
MC_1
T_1
T_2
MC_2
T_{11}
RH_3
MC_4
T_4
T_{10}
RH_2
RH_1
T_9
T_{16}
T_{15}

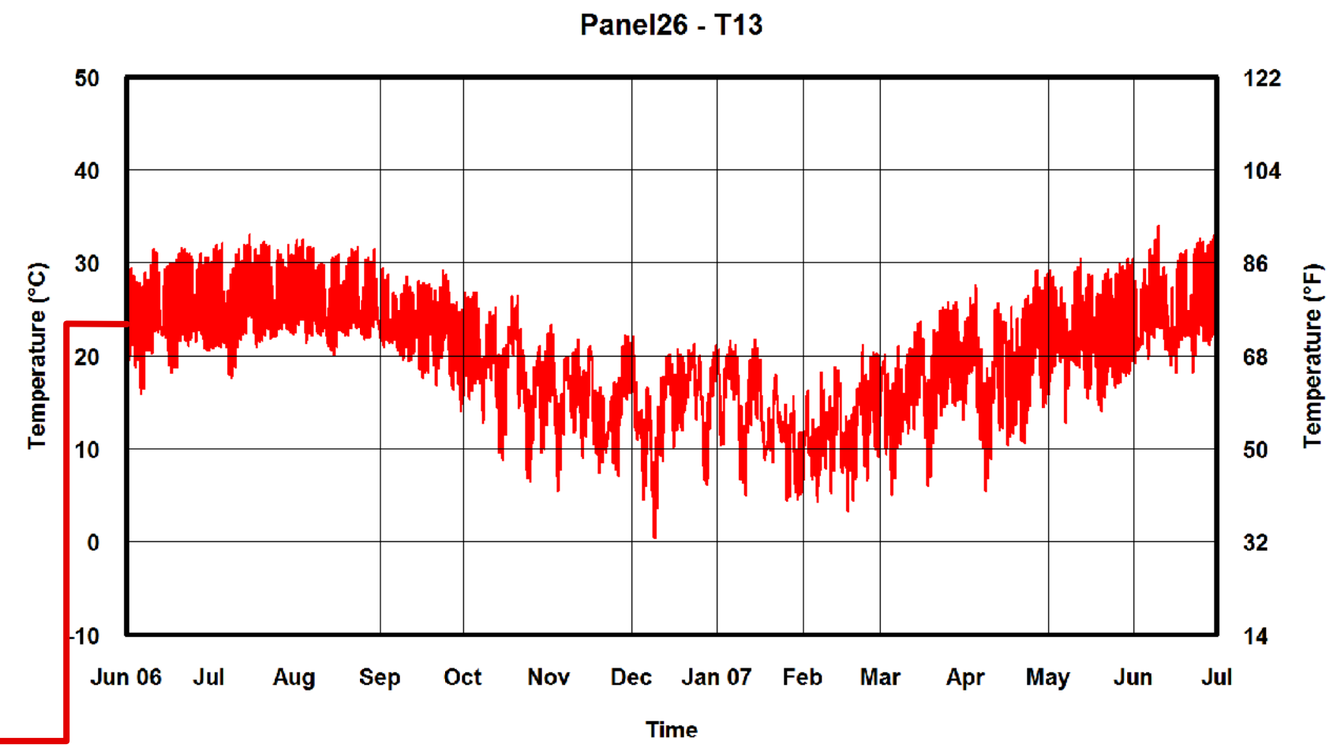
Panel26 - T13
Temperature (°C)
Temperature (°F)
50
40
30
20
10
0
-10
122
104
86
68
50
32
14
Jun 06
Jul
Aug
Sep
Oct
Nov
Dec
Jan 07
Feb
Mar
Apr
May
Jun
Jul
Time

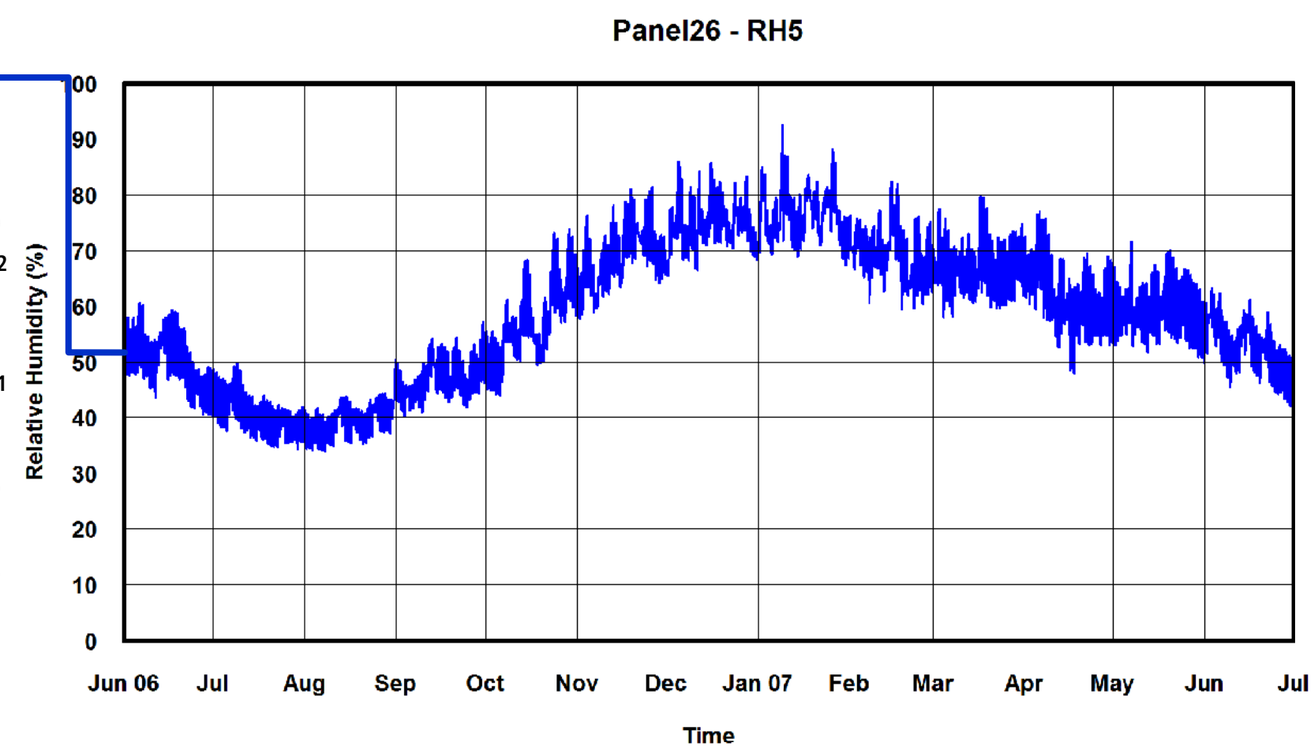
Panel26 - RH5
Relative Humidity (%)
100
90
80
70
60
50
40
30
20
10
0
Jun 06
Jul
Aug
Sep
Oct
Nov
Dec
Jan 07
Feb
Mar
Apr
May
Jun
Jul
Time

Panel 26

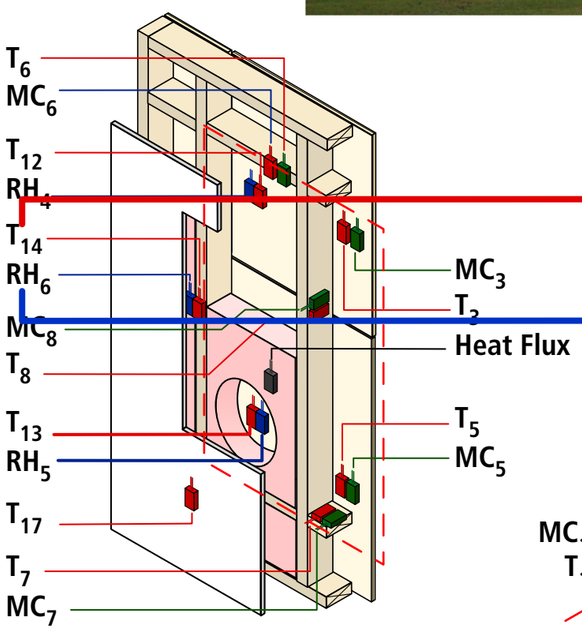
T_6
MC_6
T_{12}
RH_4
T_{14}
RH_6
MC_8
T_8
T_{13}
RH_5
T_{17}
T_7
MC_7
MC_3
T_3
Heat Flux
T_5
MC_5

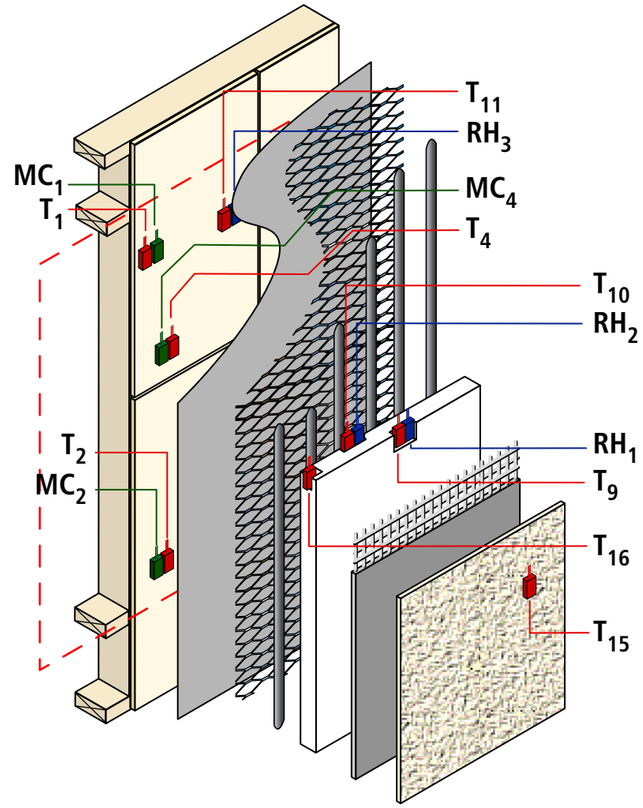
MC_1
T_1
T_2
MC_2
T_{11}
RH_3
MC_4
T_4
T_{10}
RH_2
RH_1
T_9
T_{16}
T_{15}

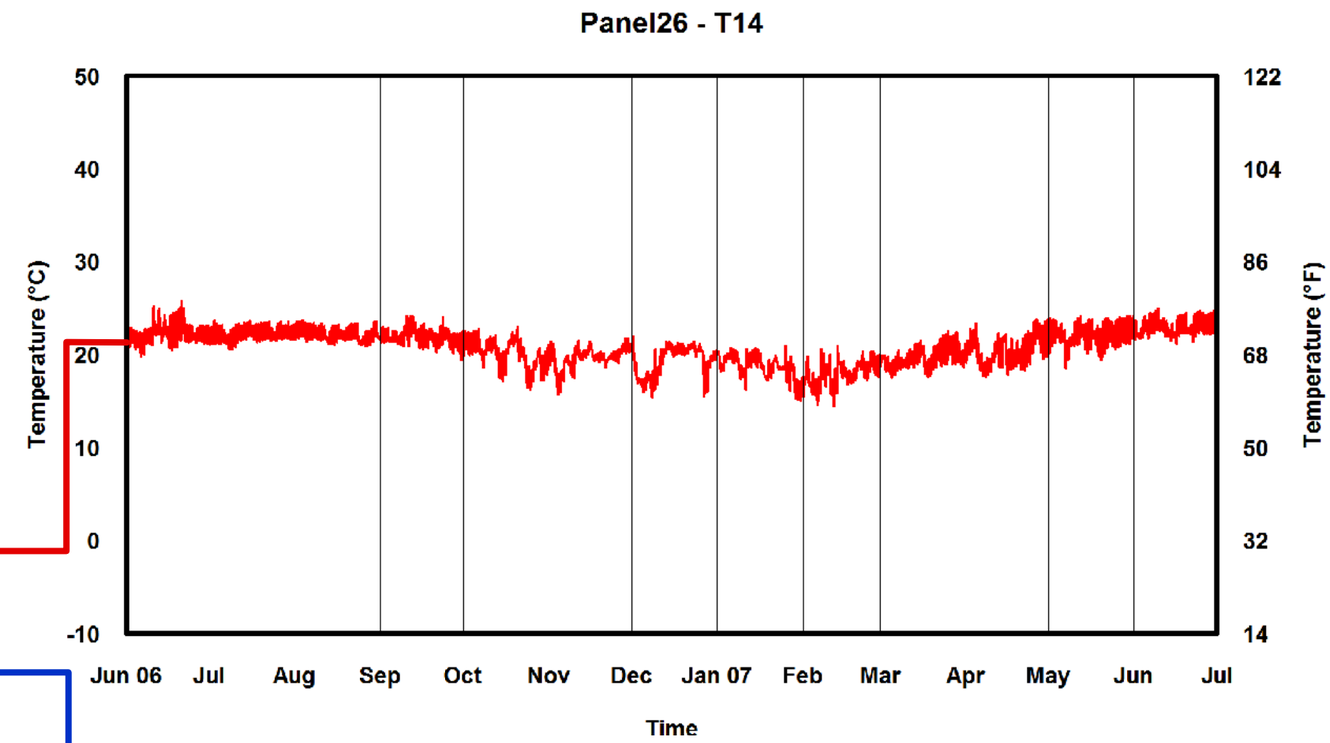
Panel26 - T14
Temperature (°C)
Temperature (°F)
50
40
30
20
10
0
-10
122
104
86
68
50
32
14
Jun 06
Jul
Aug
Sep
Oct
Nov
Dec
Jan 07
Feb
Mar
Apr
May
Jun
Jul
Time

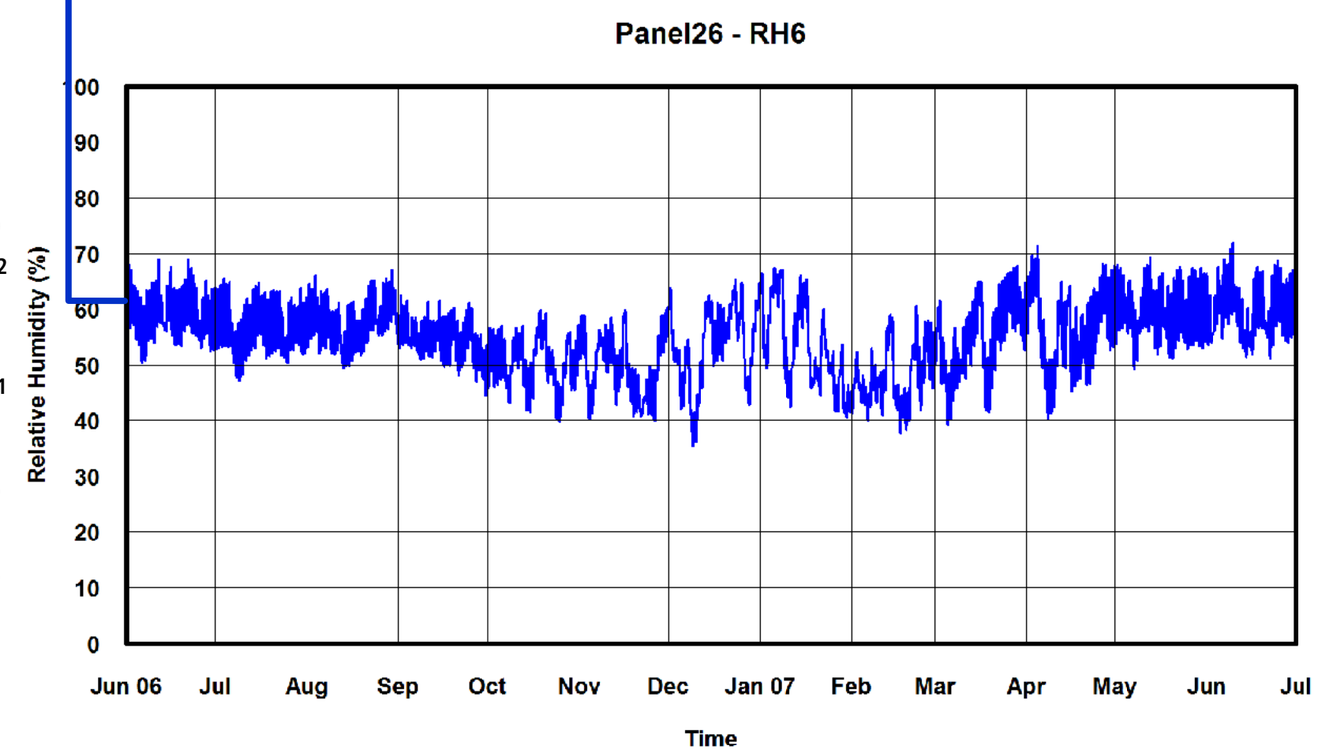
Panel26 - RH6
Relative Humidity (%)
100
90
80
70
60
50
40
30
20
10
0
Jun 06
Jul
Aug
Sep
Oct
Nov
Dec
Jan 07
Feb
Mar
Apr
May
Jun
Jul
Time

Panel 26

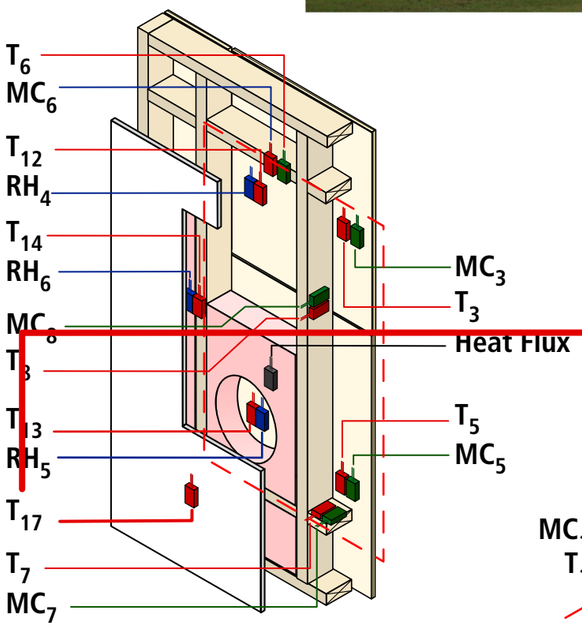
T_6
MC_6
T_{12}
RH_4
T_{14}
RH_6
MC_8
T_8
T_{13}
RH_5
T_{17}
T_7
MC_7
MC_3
T_3
Heat Flux
T_5
MC_5

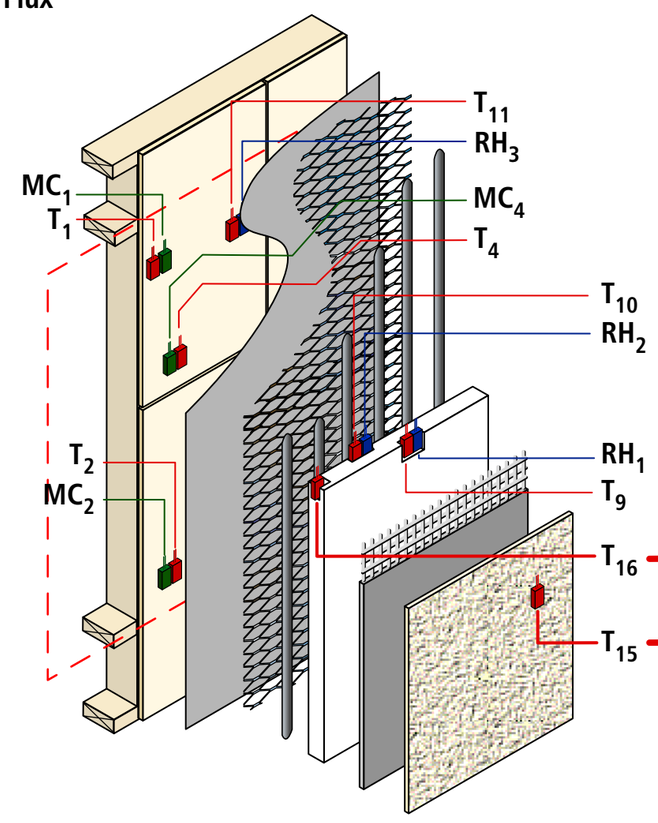
T_{11}
RH_3
MC_1
T_1
MC_4
T_4
T_{10}
RH_2
T_2
MC_2
RH_1
T_9
T_{16}
T_{15}

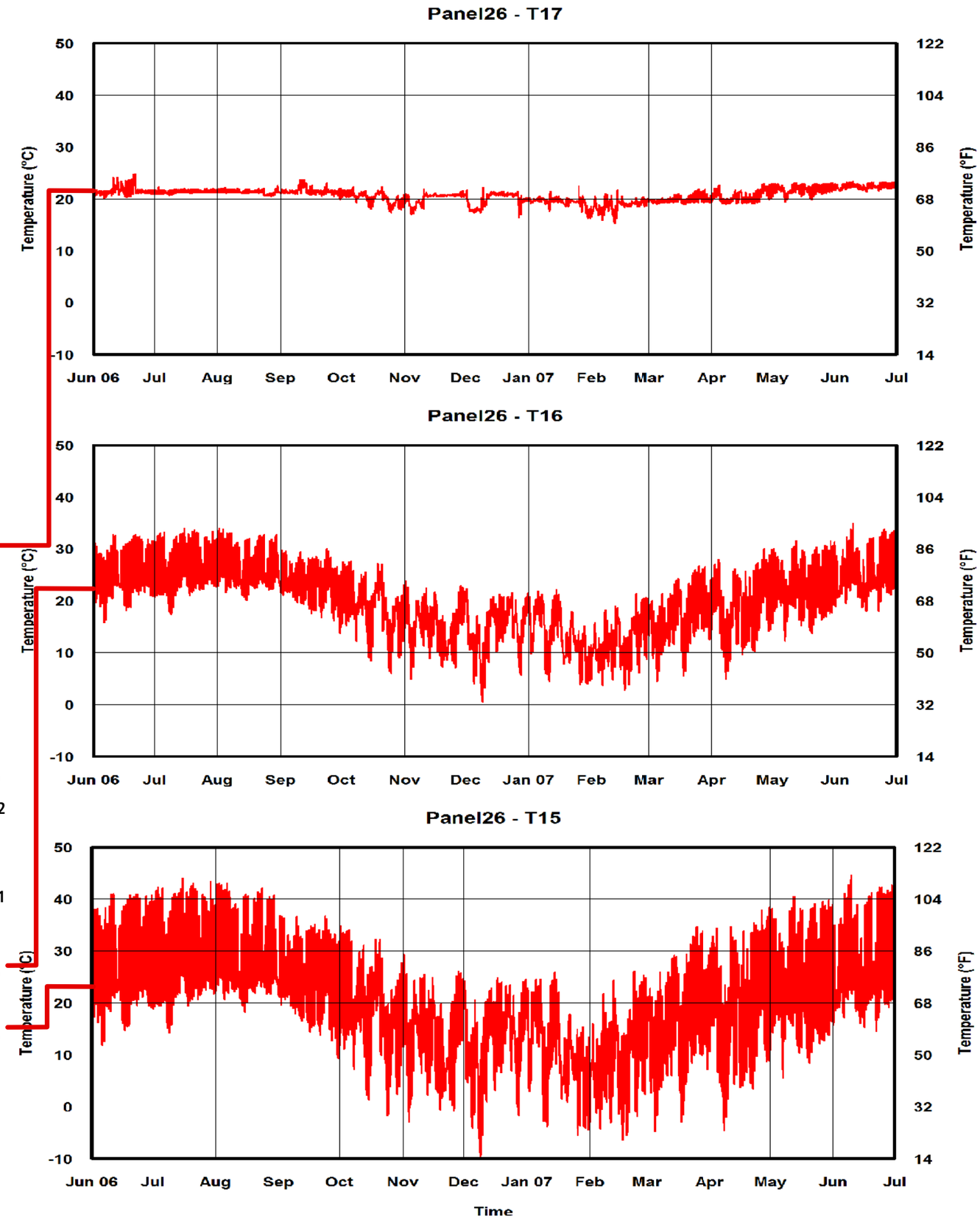
Panel26 - T17
Panel26 - T16
Panel26 - T15
Temperature (°C)
Temperature (°F)
50
40
30
20
10
0
-10
122
104
86
68
50
32
14
Jun 06
Jul
Aug
Sep
Oct
Nov
Dec
Jan 07
Feb
Mar
Apr
May
Jun
Jul
Time

Panel 26

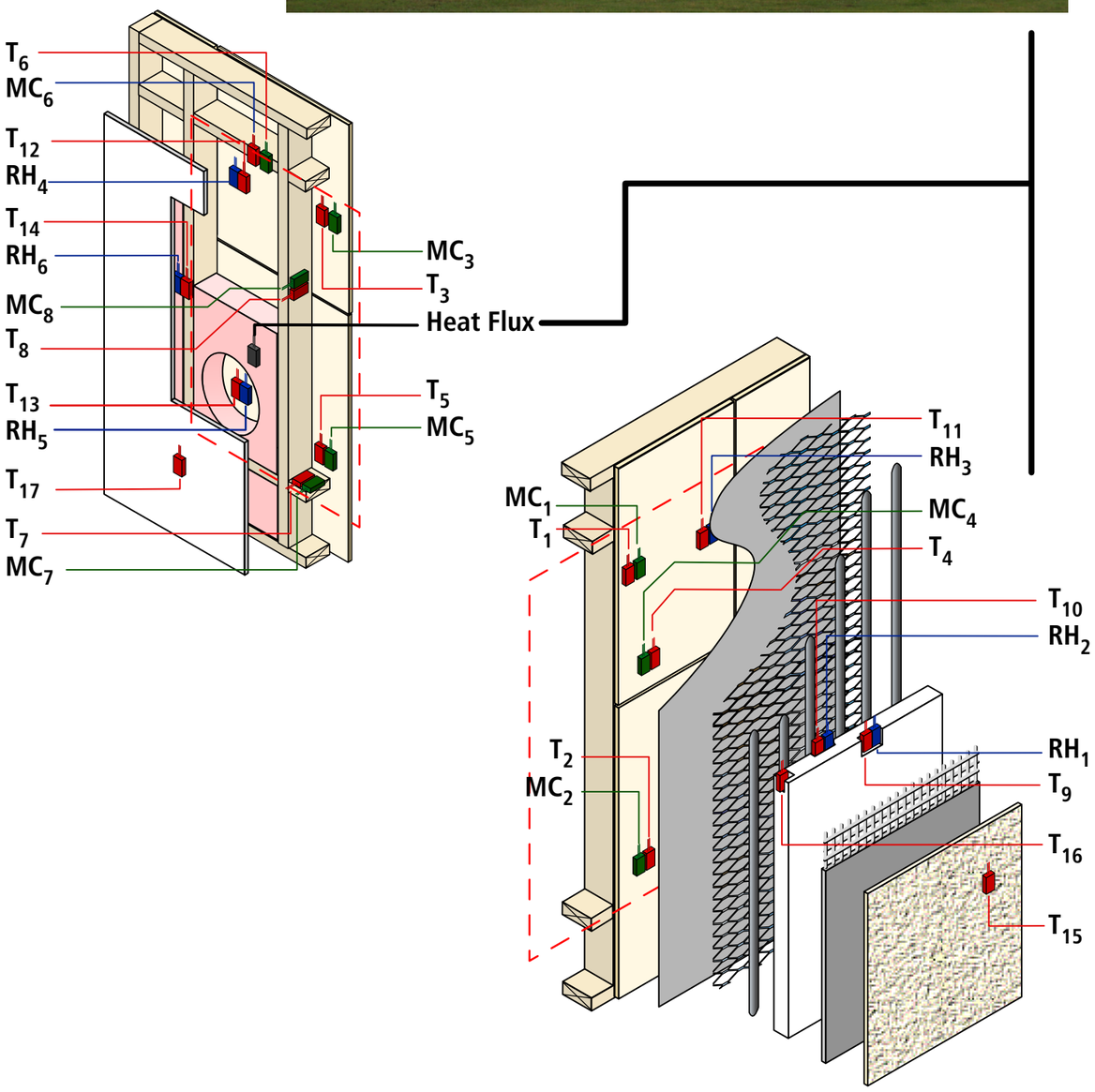
T_6
MC_6
T_{12}
RH_4
T_{14}
RH_6
MC_8
T_8
T_{13}
RH_5
T_{17}
T_7
MC_7
MC_3
T_3
Heat Flux
T_5
MC_5
T_{11}
RH_3
MC_4
T_4
MC_1
T_1
T_{10}
RH_2
RH_1
T_9
T_2
MC_2
T_{16}
T_{15}

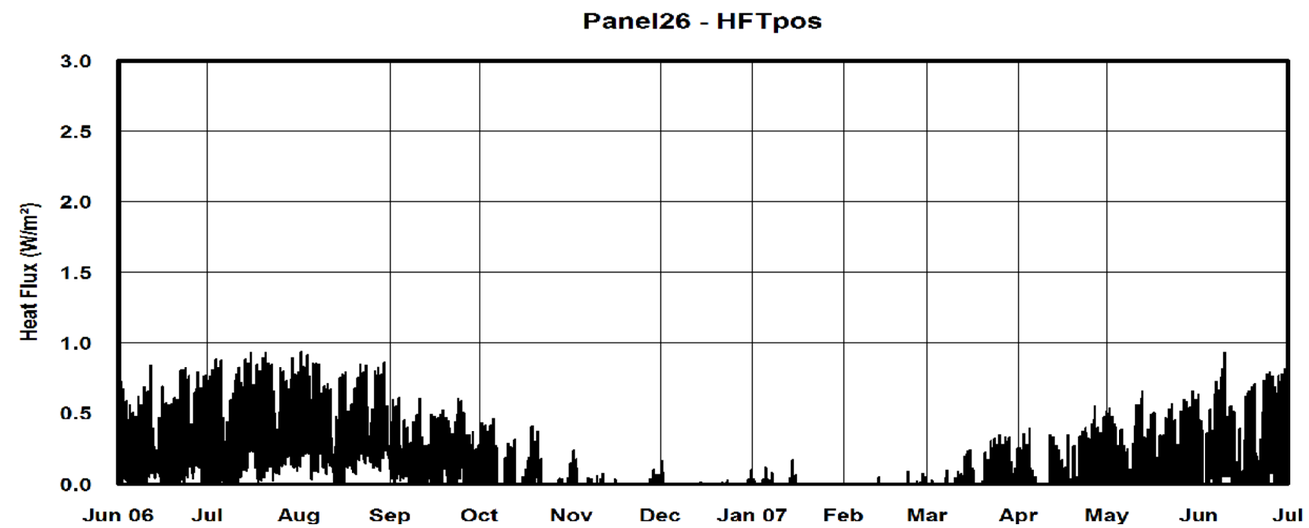
Panel26 - HFTpos
Heat Flux (W/m²)
3.0
2.5
2.0
1.5
1.0
0.5
0.0
Jun 06
Jul
Aug
Sep
Oct
Nov
Dec
Jan 07
Feb
Mar
Apr
May
Jun
Jul

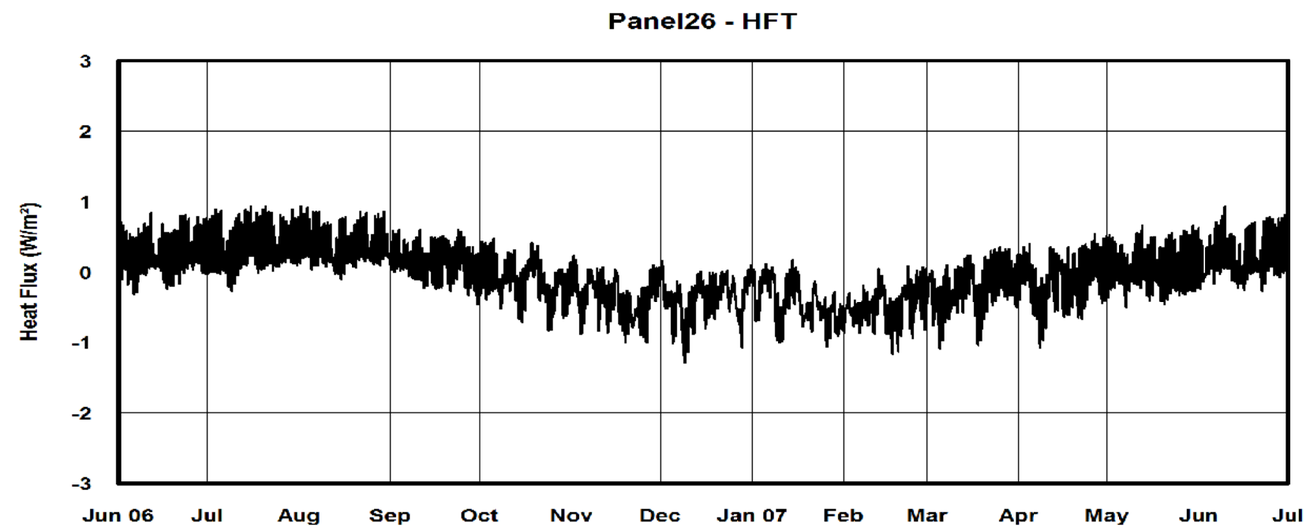
Panel26 - HFT
Heat Flux (W/m²)
3
2
1
0
-1
-2
-3
Jun 06
Jul
Aug
Sep
Oct
Nov
Dec
Jan 07
Feb
Mar
Apr
May
Jun
Jul

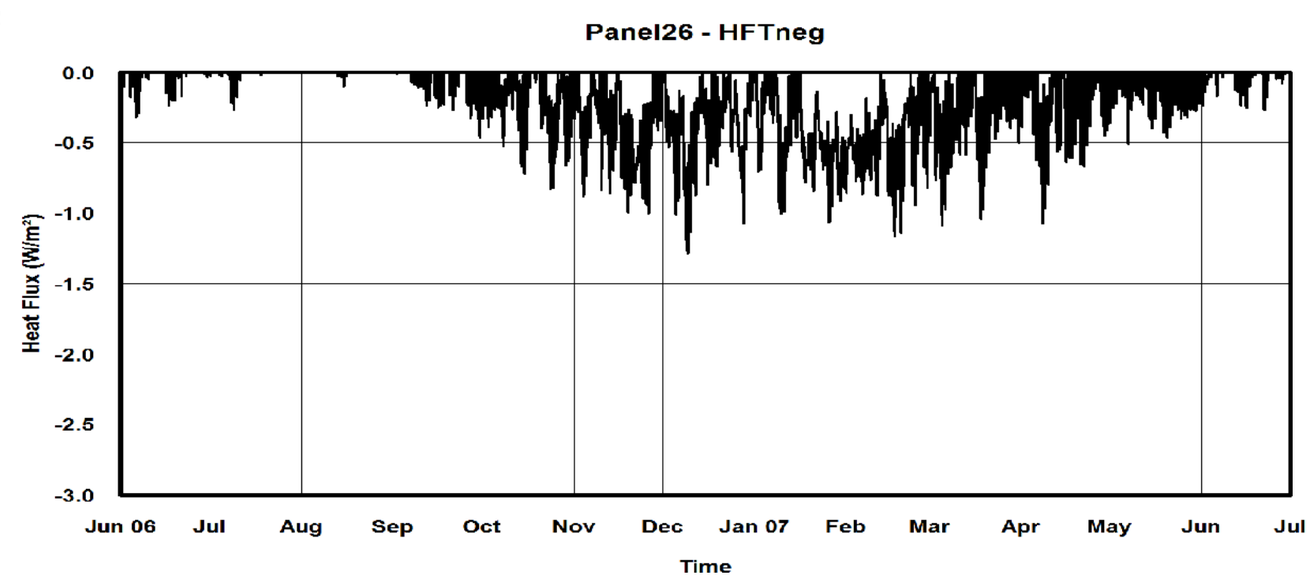
Panel26 - HFTneg
Heat Flux (W/m²)
0.0
-0.5
-1.0
-1.5
-2.0
-2.5
-3.0
Jun 06
Jul
Aug
Sep
Oct
Nov
Dec
Jan 07
Feb
Mar
Apr
May
Jun
Jul
Time