BTC/ORNL 05-UF-05-550

Engineering Science and Technology Division

Interim Draft Result Report
for Building Technology Center User Agreement UF-05-550

THE HYGROTHERMAL PERFORMANCE OF THE NET EXTERIOR INSULATION WALLS

Report 1: Experimental Design & Setup

Authored by:
Achilles N. Karagiozis and Phil Childs
Oak Ridge National Laboratory

Other Contributors:
Andre Desjarlais, (Group Leader), Jerry Atchley (Technical Staff)

Date Published - April 2006

Prepared for

EIFS INDUSTRY MEMBERS ASSOCIATION

Prepared by the
OAK RIDGE NATIONAL LABORATORY
Oak Ridge, Tennessee 37831
managed by
UT-BATTELLE, LLC
for the
U.S. DEPARTMENT OF ENERGY
under contract DE-AC05-00OR22725
PROPRIETARY INFORMATION
NOT FOR PUBLIC RELEASE

Engineering Science and Technology Division

THE HYGROTHERMAL PERFORMANCE OF THE NET EXTERIOR INSULATION WALLS

REPORT 1: Experimental Design & Setup

Date Published: April 2006

Authored by

Achilles Karagiozis, Ph.D and Phil Childs (Bsc)
`

Prepared by
OAK RIDGE NATIONAL LABORATORY
Oak Ridge, Tennessee 37831-6070
managed by
UT-BATTELLE, LLC
for the
U.S. DEPARTMENT OF ENERGY
under contract DE-AC05-00OR22725

TABLE OF CONTENTS

Table of Contents iii

ACKNOWLEDGEMENTS..... iv

Need/Problem Definition.....1

Experimental Design.....3

Conclusions 31

ACKNOWLEDGEMENTS

This project was jointly funded by EIMA, Mr. Stephan E. Klamke, Executive Director, and by the Department of Energy, Project Manager, Mr. Marc LaFrance. This reports details the experimental wall design used in this research project.

The authors of this report gratefully acknowledge important contributions by Mr. Jerry Atchely (sensor installation), Mr. Mika Salonvaara (database consultant) VTT/Finland and Florian Antretter, Germany (student assistance), as well as the support of Andre Desjarlais, ORNL group leader. The continued financial support of the U.S. Department of Energy to the moisture control research at the Oak Ridge National Laboratory has made this project possible. Finally, the authors acknowledge the contributions of EIMA members, representatives, including Bill Egan, Bill Preston, Brian Randall, John Edgar, Peter Harrison, Terry Viness, and Tina Bramlett. Last but not least, the coordination, construction management and constant enthusiasm of both Barry and Jackie Hardman is greatly appreciated.

NEED/PROBLEM DEFINITION

Moisture penetration in liquid or vapor form through a building envelope can affect not only the building's durability and indoor air quality, but also the energy efficiency of the envelope itself. For example, excessive moisture for extended periods of time may cause mechanical, chemical or biological degradation of wood-based components, corrosion of metallic components (studs and ties) efflorescence (moisture-induced salt transport and spalling). Accordingly, the service life of any building envelope component is dependent upon how well moisture penetration is controlled.

Key Issues

Systematic moisture engineering analysis is advisable for all cladding systems. Exterior insulation finish wall systems have become one of the most popular exterior building envelope systems in the residential as well as the light commercial construction market in the United States. These residential application of conventional EIFS wall systems were based on the principles of face sealing and consisted of exterior reinforced synthetic plaster base and finish coats, and EIFS insulation applied over a sheathing substrate (usually oriented strand board [OSB], plywood or gypsum based products). Another problem was the inclusion of vapor barriers in areas where, according to ASHRAE, none should be included. Typical wall configurations over which the EIFS system is applied included an insulation cavity, a vapor retarder, and finally interior gypsum board. (Figure 1). EIFS cladding systems are advantageous because they are aesthetically pleasing, energy-efficient, lightweight, and low in construction costs for a wall cladding system.

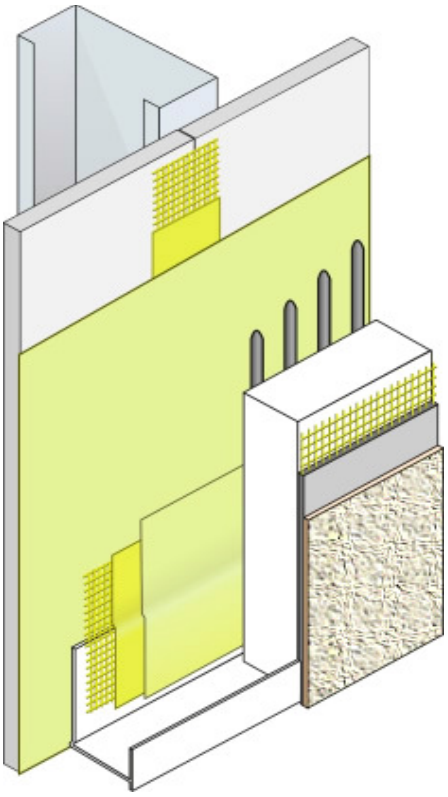

Various investigations by consultants and research organizations [Crandell and Kenny, 1995], as well as by EIFS manufacturers, have shed light on the causes of reported envelope failures beginning in late 1995 in Wilmington, S.C. Such envelope failures have been attributed to the penetration of water due to substandard windows (in excess of 47% of problems) and flashing details (35% of problems) [Nelson and Waltz, 1996]. While moisture entry should be avoided for any building envelope system, it is often overlooked that walls cladding systems can deal with incidental moisture, but cannot cope with massive failure of good construction practices allowing for extensive moisture penetration.

Figure 1: EIFS Wall System

To address these issues, a new generation of EIFS wall systems has been devised by the EIFS manufacturers. These new systems have implemented with multiple lines of defense for water management and are currently being validated for thermal and moisture performance. The purpose of this EIMA/DOE/ORNL research project is to further explore the performance of these innovative wall systems. The intent is to determine how to maintain thermal performance while also optimizing the drying potential. Vapor barrier and "smart retarders" positioning may provide air barrier and weather barrier continuity that is superior to current technology.[1] EIFS manufacturers have invested heavily in the research and development of innovative building material and system products. These companies have over 1000 years of expertise in the chemical, construction and equipment-related fields, and have developed innovative alternatives to conventional critical material systems. These systems have favorable market potential, especially in energy retrofit applications as well as in new commercial constructions (EIFS).

In the following sections, the details of the experimental designed used to instrument and monitor the hygrothermal performance of the wall used in this project is detailed.

[1] The Use of Housewrap in Walls: Installation, Performance and Implications, PHRC Research Series Report No. 59 University Park, 1998) p.41.

EXPERIMENTAL DESIGN

Following is the description of the experimental design that includes information on the data acquisition system, instrumentation procedures, sensors employed, sensor uncertainty ranges, and DAS sensor listing. The information provided will be used later in the interpretation of the results.

DAS Description

A description of the DAS and sensors used to monitor the NET Weathering Facility are included in this section. Over 600 sensors are used to monitor the facility environment and the 18 test walls currently in place. These sensors are controlled and monitored by three Campbell Scientific (CSI) CR10X dataloggers and 13 multiplexers. Initially, two dataloggers were installed and the weather instruments were split between the two dataloggers. Later a third datalogger was installed to combine the weather data instruments into one DAS and to allow room for expansion. In August of 2005, three additional walls were added to the original 15 for the current total of 18.

DAS 1 is dedicated to temperatures, DAS 2 to RH sensors and moisture pins, and DAS 3 to weather instruments, temperatures, and moisture pins. Each individual DAS consists of a Campbell Scientific CR10X datalogger and AM16/32 multiplexers. DAS 3 also has a CSI SDM-SW8A pulse counter multiplexer which is used to collect pulses from the rain gauges.
Sensors include RH sensors, thermistors, moisture pins, and weather monitoring. Figure 1 shows a typical DAS setup at the facility.

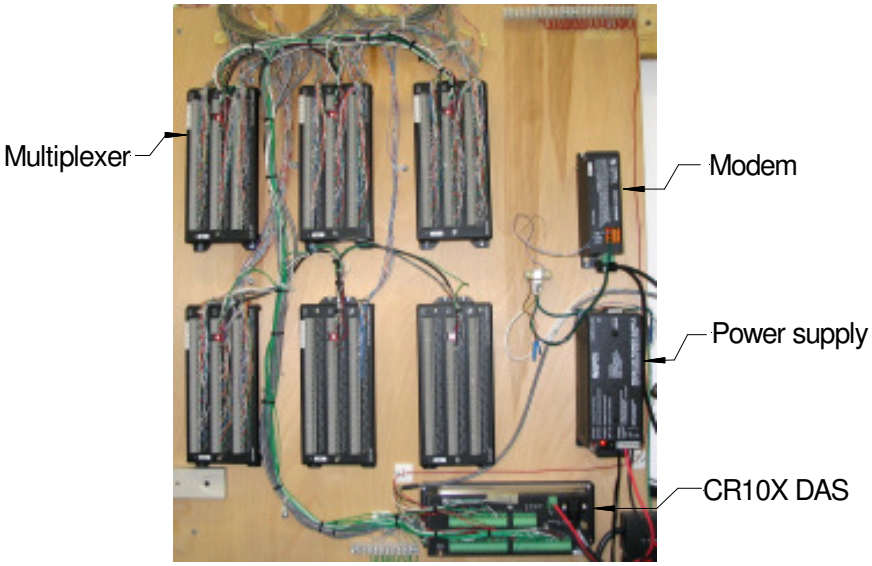

Figure 2: Typical DAS layout

Each sensor is scanned at five minute intervals and the data is then averaged and stored at hourly intervals. For the moisture pins, at the five minute intervals the DAS scans each set of pins 30 times. The data is then filtered for zero or negative values and the remaining values are averaged and placed into temporary storage until the final hourly averaged values are computed and stored. Initially, the data was being stored at 30 minute intervals, but it was decided that hourly intervals was more than adequate due to the very gradual change of conditions within the wall specimens. In addition, the number of hours of internal datalogger storage would double, reducing loss of data should communications issues arise.

Data from the three dataloggers are retrieved on a daily basis. Each datalogger has its on phone line and associated modem. A dedicated computer and modem located at the Oak Ridge National Lab calls up each of the three dataloggers around midnight each night and downloads and stores the data from each DAS. The current dataloggers are at or near capacity so any significant instrumentation additions will require adding additional dataloggers. Under the current system of communication, each datalogger requires its own phone line and modem. Its anticipated that a networking system using a broadband connection and multidrop devices will be utilized once the local cable company connects the facility to broadband access. In the following sections, specific details on the type of sensors, ranges, and stated accuracy are provided.

Instrumentation

The total sensor package consists of wall, attic and facility environment temperatures and relative humidities, wood and wall/attic component moisture content, and weather instrumentation. The weather instrumentation consists of wind speed and orientation, solar radiation, rainfall, temperature, and relative humidity.

There are currently 18 test wall panels with each wall test panel consisting of 17 temperatures, 6 RH sensors and 8 sets of moisture pins. In addition, 13 of the test walls contain heat flux transducers for a total instrumentation package of approximately 620 sensors spread across three dataloggers. Table 1 gives a breakdown of the instrumentation package.

To characterize the behavior of the interior environment and the indoor exposure of the wall panels, the temperature and RH of both test rooms of the facility are monitored at two different heights. The external exposure is characterized by a weather station that records temperature, RH, horizontal and vertical solar radiation, wind speed and direction, and horizontal and vertical rainfall. The vertical solar radiation is measured on the south side of the facility, monitoring the actual solar radiation exposure seen by the test walls. The vertical rainfall is measured at three different locations on the facility, two on the south side and one on the north side. Wind direction is recorded in degrees and is a difficult measurement to quantify when recording data on an hourly basis. Averaging wind direction for any extended time period is somewhat meaningless. For example, 0° and 360° both signify north wind direction, but averaged together a value of 180° is calculated. This value indicates a direction of south, directly opposite the actual

direction. To better quantify the direction, a wind vector calculation is processed within the datalogger by three different methods.

Table 1: Sensor List

Sensor	Location	Number
Outdoor temperature	Top of building exterior	1
Outdoor RH	Top of building exterior	1
Solar horizontal	Top of building exterior	1
Solar vertical	South center building exterior	1
Wind speed	Top of building exterior	1
Wind direction	Top of building exterior	1
Rainfall horizontal	Top of building exterior	1
Rainfall vertical south 1	South wall center	1
Rainfall vertical south 2	South wall east	1
Rainfall vertical north	North wall east	1
Indoor temperature Rm. 1	Room 1 high and low	2
Indoor RH Rm. 1	Room 1 high and low	2
Indoor temperature Rm. 2	Room 2 high and low	2
Indoor RH Rm. 2	Room 2 high and low	2
Test wall panel thermistors	17 per wall, 18 walls	306
Attic test thermistors	20 scattered in attic	20
Test wall panel RH sensors	6 per wall, 18 walls	108
Attic test RH sensors	12 scattered in attic	12
Test wall panel moisture pin sets	8 per wall, 18 walls	144
Attic test moisture pin sets	8 scattered in attic	8
	Total Number of Sensors	**616**

Wiring

Five terminal strips were installed at the top of each wall panel to provide a junction between the sensors and the wiring back to the DAS. Wiring to the DAS consists of six 24 gauge 8-conductor cables. Five of the cables were for connecting the sensors to the DAS multiplexers and the sixth cable was used to provide power from the DAS to the sensors. Figures 4 and 5 show the layout and an actual picture of the installed terminal strips, respectively.

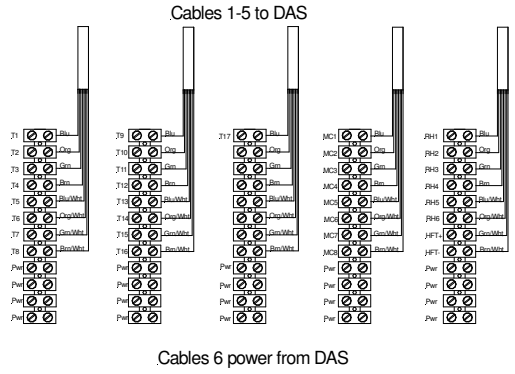

Figure 4 Wall terminal strips

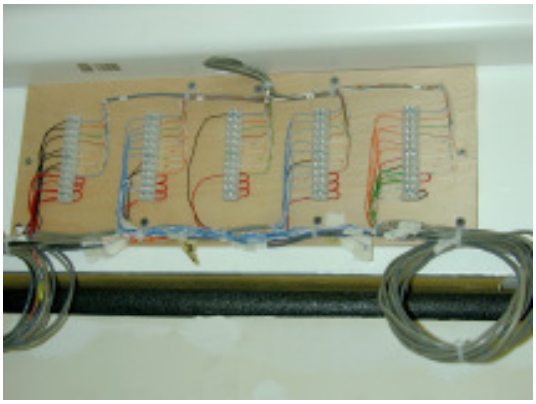

Figure 3 Typical wall terminal strips

Wires within the test walls were routed to create the least possible amount of obstructions in the measurement cavities. Wires were run single file within the measurement cavities to minimize displacement of the insulation materials. All sensor wiring within the wall panels was stapled to the wall components with rounded cable staples. Wiring was moved thorough drilled holes into the unmonitored adjacent cavities at convenient locations. All holes in and out of the measurement cavities were sealed with a silicone caulk. Care was taken to avoid any anomalies such as air spaces, etc. which could affect thermal performance within the measurement cavities.

Sensors

The sensors used at the test facility are primarily off-the-shelf sensors purchased and in some cases modified to perform the required task. The lone exception is the moisture pins which are custom made devices. This section describes the sensors used and the method of installation. Table 2 lists the sensors used and some of their specifications.

Table 2: Installed sensor accuracy

Sensor	Accuracy	Sensitivity	Repeatability	Supply Voltage
Fenwall Uni-curve 10K ohm thermistor	**±.2%**	**-**	**±0.2%**	**2.5Vdc**
Honeywell Hy-Cal Humidity Sensor *HIH-3610 Series*	**±2%**	**-**	**±0.5%**	**5Vdc**
Wood moisture content sensors	**±2% within 8-30% MC**	**-**	**±2%**	**12Vdc**
Heat Flux Transducer (Concept Engineering Model F-002-4	**-**	**(1.8·Btu/Ft^{2}·Hr)/Mv**	**-**	**-**
Outdoor RH (Vaisala CS500)	**±3%**	**-**	**-**	**12Vdc**
Wind Speed (R. M. Young Model 05305 Wind Monitor)	**±.4%**	**-**	**-**	**-**
Wind Direction (R. M. Young Model 05305 Wind	**±3°**	**-**	**-**	**12Vdc**

Monitor				
Rainfall (Texas Electronics Model TE525)	**±1%@1”/hr**	**-**	**-**	**-**
Solar pyranometer, vertical (LI-Cor LI200X	**±3%**	**0.2·kW·m^{-2}·mV^{-1}**	**-**	**-**
Solar pyranometer, horizontal (Kipp & Zonen SP-Lite	**±3%**	**10µV·W^{-1}·m^{-2}**	**-**	**-**
Campbell Sci CR10X w/32 Channel multiplexer	**±0.1% of FSR**	**-**	**-**	**12Vdc**

Thermistors

All temperature sensors used on the test walls were are Fenwall Uni-curve precision thermistors with a 10K Ohm @ 25 degrees Celsius output and an interchangeabililty of better than 0.2 ºC. The thermistor leads were soldered to solid conductor wiring and connected to the DAS through the terminal strips at the top of each wall panel. The thermistors and their soldered connections were incased in heat shrink tubing to strengthen and protect the fragile leads as well as add moisture resistance to the connections. Each RH sensor location and moisture pin set location has an associated temperature in close proximity to the sensor. The resistance vs. temperature correlation curve data from the manufacture was used to calculate the following relationship. This curve fit was applied to the thermistors to calculate temperature from each thermistor.

$$T = -0.101R^3 + 4.346R^2 - 77.18R + 446.05$$

where:
T = temperature in ^{o}C and
R = electrical resistance in Ohms.
Figure 4 shows a diagram of the thermistors used in this experiment.

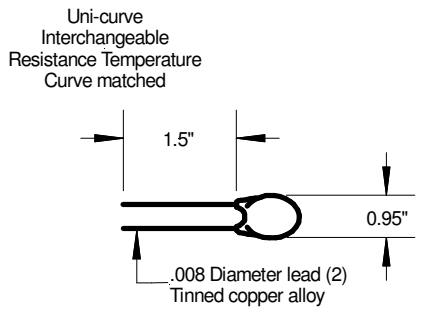

Figure 5: Thermistor Design

Relative Humidity Sensors

Relative humidity measurements are made using Honeywell/HyCal HIH-3610 series sensors. These sensors are rated at ±2% accuracy with calibrations traceable to the National Institute of Standards and Technology (NIST). The circuit board that makes up the sensor RH sensor is very delicate and requires special handling. To help protect the delicate sensors from handling and from liquid water, the sensor along with a thermistor for measuring the temperature were encapsulated in a breathable water repellant fabric with the lead wire end sealed in heat shrink tubing. Figure 7 show the bare sensor and the encapsulated installed in a wall cavity, respectively.

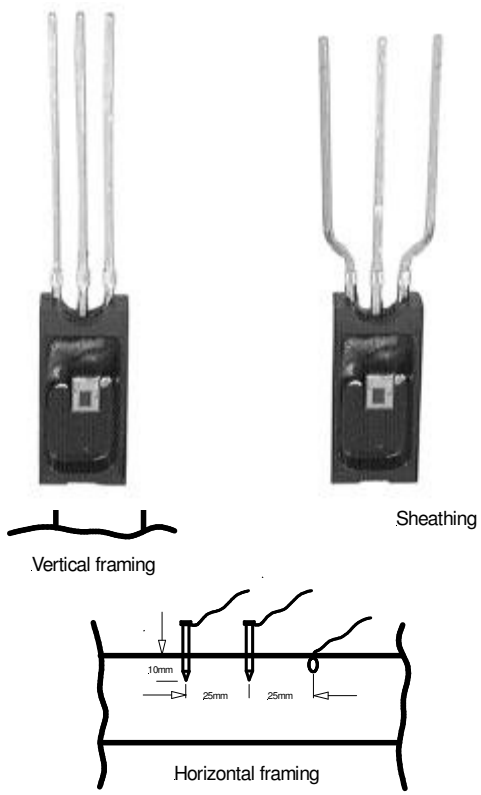

Figure 7 Encapsulated RH sensor

Figure 6: Relative humidity sensor & Wood Moisture Content

Wood Moisture Sensors

The moisture-content sensors for the test walls consist of steel pins that are driven directly into the wood framing and sheathing materials. Typically, at the locations where the wood resistance probes were installed, thermistors were placed into pre-drilled holes and sealed in place using a silicone caulk. The pins are coated with an insulating paint to within 2mm of the point and are driven into the framing and sheathing on the inside test wall surface. The pins are driven into the sheathing materials such that the uncoated section of the pin is set near the midpoint of the material thickness at approximately 6mm depth. Two different pin depths were used for the framing members, one at 6mm and another at 10mm. Care was taken to place the pins in an area of clear wood grain, free of knots and other imperfections. Figure 8 show the moisture pin layout and a set on installed pins, respectively. In the case of the metal framed walls, a block of wood was used to mount the pins. The block was then positioned into the tracks and studs of the wall near the same locations as in the wood framed walls.

To determine moisture content using the moisture pins, a 12 volt DC signal is applied across the pins. This voltage is applied for one second to allow the readings to stabilize and then the DAS scans each set of pins 30 times, then filters the data and computes an average resistance. The resulting resistance is then calculated within the DAS program. The actual moisture content is processed independently of the DAS as temperature and material species' corrections are applied.

Issues

As with any new experiment, there is a time period, varying with the complexity of the experiment, where issues with instrumentation and data collection can and will occur. This project is no exception. The datalogger was installed in October of 2004. Data collection was sporadic until mid January 2005 due to unforeseen problems as well as normal shakedown of the DAS and instrumentation package. Most of the problems involved communications with the lab however, some additional problems did occur with some of the instrumentation.

Because the test site is some 400 miles from the lab, visits to the facility are infrequent. Before a trip can be planned, some solutions to the problem must be determined. We tried to recreate most of the issues in the lab. We then tried to fashion a solution, traveled to the facility and implemented the solution and then waited until some data were collected to verify that the problem was solved. This method while necessary can be frustrating. On more than one occasion, a solution was implemented, worked for the time period we were at the facility, and then quit working before we got back to the lab.

As mentioned previously, most of the problems occurred with the communication back to the lab. Problems occurred with the phone line on more than one occasion and with a multidrop system that was tried early on where multiple dataloggers could share one phone line. While this multidrop system is designed to work with the current setup, some unresolved hardware issues that could not be duplicated at the lab kept us from fully implementing this approach. Consultation with Campbell Scientific Inc. application engineers did not resolve the problem as they had not seen this behavior previously. As mentioned earlier, we plan to revisit this approach using a broadband connection in the near future. To get back on line, the easiest solution became to have individual phone lines for each datalogger. That is our current system and has worked flawlessly since mid January.

In addition to the communication problems experienced, some sensors dropped out after a period of time. The reason was unknown, but broken wires and normal failure of random sensors is expected. Some of the sensors were replaced, but others because of their location within the wall were not. Another problem that we experienced with the moisture pins was a grounding problem within the facility. For some unknown reason, a small voltage potential occurs between the datalogger ground and the building ground. To solve that problem, a new ground rod was installed and all of our dataloggers were grounded to the new rod. One additional problem occurred with the weather station rain gauge. While at the facility we noticed that no rainfall was recorded after a heavy rain.

Upon inspection, we found that the rain gauge had become plugged with airborne substances from trees etc. We now routinely check and clean the gauge while at the facility.

Table 3: DAS 1 Sensor Listing

Running Count	DAS	MUX	MUX Chan	Sensor Name	DAS Label	Location/ Panel	Wire Color	Cable
1	1	A	1H	T1	T_1	Panel 1	Blu	1-1
2	1	A	1L	T2	T_2	Panel 1	Org	1-1
3	1	A	2H	T3	T_3	Panel 1	Grn	1-1
4	1	A	2L	T4	T_4	Panel 1	Brn	1-1
5	1	A	3H	T5	T_5	Panel 1	Blu/Wht	1-1
6	1	A	3L	T6	T_6	Panel 1	Org/Wht	1-1
7	1	A	4H	T7	T_7	Panel 1	Grn/Wht	1-1
8	1	A	4L	T8	T_8	Panel 1	Brn/Wht	1-1
9	1	A	5H	T9	T_9	Panel 1	Blu	1-2
10	1	A	5L	T10	T_10	Panel 1	Org	1-2
11	1	A	6H	T11	T_11	Panel 1	Grn	1-2
12	1	A	6L	T12	T_12	Panel 1	Brn	1-2
13	1	A	7H	T13	T_13	Panel 1	Blu/Wht	1-2
14	1	A	7L	T14	T_14	Panel 1	Org/Wht	1-2
15	1	A	8H	T15	T_15	Panel 1	Grn/Wht	1-2
16	1	A	8L	T16	T_16	Panel 1	Brn/Wht	1-2
17	1	A	9H	T17	T_17	Panel 1	Blu	1-3
18	1	A	9L	T1	T_18	Panel 2	Blu	2-1
19	1	A	10H	T2	T_19	Panel 2	Org	2-1
20	1	A	10L	T3	T_20	Panel 2	Grn	2-1
21	1	A	11H	T4	T_21	Panel 2	Brn	2-1
22	1	A	11L	T5	T_22	Panel 2	Blu/Wht	2-1
23	1	A	12H	T6	T_23	Panel 2	Org/Wht	2-1
24	1	A	12L	T7	T_24	Panel 2	Grn/Wht	2-1
25	1	A	13H	T8	T_25	Panel 2	Brn/Wht	2-1
26	1	A	13L	T9	T_26	Panel 2	Blu	2-2
27	1	A	14H	T10	T_27	Panel 2	Org	2-2
28	1	A	14L	T11	T_28	Panel 2	Grn	2-2
29	1	A	15H	T12	T_29	Panel 2	Brn	2-2
30	1	A	15L	T13	T_30	Panel 2	Blu/Wht	2-2
31	1	A	16H	T14	T_31	Panel 2	Org/Wht	2-2
32	1	A	16L	T15	T_32	Panel 2	Grn/Wht	2-2
33	1	A	17H	T16	T_33	Panel 2	Brn/Wht	2-2
34	1	A	17L	T17	T_34	Panel 2	Blu	2-3
35	1	A	18H	T1	T_35	Panel 3	Blu	3-1
36	1	A	18L	T2	T_36	Panel 3	Org	3-1
37	1	A	19H	T3	T_37	Panel 3	Grn	3-1
38	1	A	19L	T4	T_38	Panel 3	Brn	3-1
39	1	A	20H	T5	T_39	Panel 3	Blu/Wht	3-1

Running Count	DAS	MUX	MUX Chan	Sensor Name	DAS Label	Location/ Panel	Wire Color	Cable
40	1	A	20L	T6	T_40	Panel 3	Org/Wht	3-1
41	1	A	21H	T7	T_41	Panel 3	Grn/Wht	3-1
42	1	A	21L	T8	T_42	Panel 3	Brn/Wht	3-1
43	1	A	22H	T9	T_43	Panel 3	Blu	3-2
44	1	A	22L	T10	T_44	Panel 3	Org	3-2
45	1	A	23H	T11	T_45	Panel 3	Grn	3-2
46	1	A	23L	T12	T_46	Panel 3	Brn	3-2
47	1	A	24H	T13	T_47	Panel 3	Blu/Wht	3-2
48	1	A	24L	T14	T_48	Panel 3	Org/Wht	3-2
49	1	A	25H	T15	T_49	Panel 3	Grn/Wht	3-2
50	1	A	25L	T16	T_50	Panel 3	Brn/Wht	3-2
51	1	A	26H	T17	T_51	Panel 3	Blu	3-3
52	1	A	26L	T1	T_52	Panel 4	Blu	4-1
53	1	A	27H	T2	T_53	Panel 4	Org	4-1
54	1	A	27L	T3	T_54	Panel 4	Grn	4-1
55	1	A	28H	T4	T_55	Panel 4	Brn	4-1
56	1	A	28L	T5	T_56	Panel 4	Blu/Wht	4-1
57	1	A	29H	T6	T_57	Panel 4	Org/Wht	4-1
58	1	A	29L	T7	T_58	Panel 4	Grn/Wht	4-1
59	1	A	30H	T8	T_59	Panel 4	Brn/Wht	4-1
60	1	A	30L	T9	T_60	Panel 4	Blu	4-2
61	1	A	31H	T10	T_61	Panel 4	Org	4-2
62	1	A	31L	T11	T_62	Panel 4	Grn	4-2
63	1	A	32H	T12	T_63	Panel 4	Brn	4-2
64	1	A	32L	T13	T_64	Panel 4	Blu/Wht	4-2
65	1	B	1H	T14	T_65	Panel 4	Org/Wht	4-2
66	1	B	1L	T15	T_66	Panel 4	Grn/Wht	4-2
67	1	B	2H	T16	T_67	Panel 4	Brn/Wht	4-2
68	1	B	2L	T17	T_68	Panel 4	Blu	4-3
69	1	B	3H	T1	T_69	Panel 5	Blu	5-1
70	1	B	3L	T2	T_70	Panel 5	Org	5-1
71	1	B	4H	T3	T_71	Panel 5	Grn	5-1
72	1	B	4L	T4	T_72	Panel 5	Brn	5-1
73	1	B	5H	T5	T_73	Panel 5	Blu/Wht	5-1
74	1	B	5L	T6	T_74	Panel 5	Org/Wht	5-1
75	1	B	6H	T7	T_75	Panel 5	Grn/Wht	5-1
76	1	B	6L	T8	T_76	Panel 5	Brn/Wht	5-1
77	1	B	7H	T9	T_77	Panel 5	Blu	5-2
78	1	B	7L	T10	T_78	Panel 5	Org	5-2
79	1	B	8H	T11	T_79	Panel 5	Grn	5-2

Running Count	DAS	MUX	MUX Chan	Sensor Name	DAS Label	Location/ Panel	Wire Color	Cable
80	1	B	8L	T12	T_80	Panel 5	Brn	5-2
81	1	B	9H	T13	T_81	Panel 5	Blu/Wht	5-2
82	1	B	9L	T14	T_82	Panel 5	Org/Wht	5-2
83	1	B	10H	T15	T_83	Panel 5	Grn/Wht	5-2
84	1	B	10L	T16	T_84	Panel 5	Brn/Wht	5-2
85	1	B	11H	T17	T_85	Panel 5	Blu	5-3
86	1	B	11L	T1	T_86	Panel 6	Blu	6-1
87	1	B	12H	T2	T_87	Panel 6	Org	6-1
88	1	B	12L	T3	T_88	Panel 6	Grn	6-1
89	1	B	13H	T4	T_89	Panel 6	Brn	6-1
90	1	B	13L	T5	T_90	Panel 6	Blu/Wht	6-1
91	1	B	14H	T6	T_91	Panel 6	Org/Wht	6-1
92	1	B	14L	T7	T_92	Panel 6	Grn/Wht	6-1
93	1	B	15H	T8	T_93	Panel 6	Brn/Wht	6-1
94	1	B	15L	T9	T_94	Panel 6	Blu	6-2
95	1	B	16H	T10	T_95	Panel 6	Org	6-2
96	1	B	16L	T11	T_96	Panel 6	Grn	6-2
97	1	B	17H	T12	T_97	Panel 6	Brn	6-2
98	1	B	17L	T13	T_98	Panel 6	Blu/Wht	6-2
99	1	B	18H	T14	T_99	Panel 6	Org/Wht	6-2
100	1	B	18L	T15	T_100	Panel 6	Grn/Wht	6-2
101	1	B	19H	T16	T_101	Panel 6	Brn/Wht	6-2
102	1	B	19L	T17	T_102	Panel 6	Blu	6-3
103	1	B	20H	T1	T_103	Panel 7	Blu	7-1
104	1	B	20L	T2	T_104	Panel 7	Org	7-1
105	1	B	21H	T3	T_105	Panel 7	Grn	7-1
106	1	B	21L	T4	T_106	Panel 7	Brn	7-1
107	1	B	22H	T5	T_107	Panel 7	Blu/Wht	7-1
108	1	B	22L	T6	T_108	Panel 7	Org/Wht	7-1
109	1	B	23H	T7	T_109	Panel 7	Grn/Wht	7-1
110	1	B	23L	T8	T_110	Panel 7	Brn/Wht	7-1
111	1	B	24H	T9	T_111	Panel 7	Blu	7-2
112	1	B	24L	T10	T_112	Panel 7	Org	7-2
113	1	B	25H	T11	T_113	Panel 7	Grn	7-2
114	1	B	25L	T12	T_114	Panel 7	Brn	7-2
115	1	B	26H	T13	T_115	Panel 7	Blu/Wht	7-2
116	1	B	26L	T14	T_116	Panel 7	Org/Wht	7-2
117	1	B	27H	T15	T_117	Panel 7	Grn/Wht	7-2
118	1	B	27L	T16	T_118	Panel 7	Brn/Wht	7-2
119	1	B	28H	T17	T_119	Panel 7	Blu	7-3

Running Count	DAS	MUX	MUX Chan	Sensor Name	DAS Label	Location/ Panel	Wire Color	Cable
120	1	B	28L	T1	T_120	Panel 8	Blu	8-1
121	1	B	29H	T2	T_121	Panel 8	Org	8-1
122	1	B	29L	T3	T_122	Panel 8	Grn	8-1
123	1	B	30H	T4	T_123	Panel 8	Brn	8-1
124	1	B	30L	T5	T_124	Panel 8	Blu/Wht	8-1
125	1	B	31H	T6	T_125	Panel 8	Org/Wht	8-1
126	1	B	31L	T7	T_126	Panel 8	Grn/Wht	8-1
127	1	B	32H	T8	T_127	Panel 8	Brn/Wht	8-1
128	1	B	32L	T9	T_128	Panel 8	Blu	8-2
129	1	C	1H	T10	T_129	Panel 8	Org	8-2
130	1	C	1L	T11	T_130	Panel 8	Grn	8-2
131	1	C	2H	T12	T_131	Panel 8	Brn	8-2
132	1	C	2L	T13	T_132	Panel 8	Blu/Wht	8-2
133	1	C	3H	T14	T_133	Panel 8	Org/Wht	8-2
134	1	C	3L	T15	T_134	Panel 8	Grn/Wht	8-2
135	1	C	4H	T16	T_135	Panel 8	Brn/Wht	8-2
136	1	C	4L	T17	T_136	Panel 8	Blu	8-3
137	1	C	5H	T1	T_137	Panel 9	Blu	9-1
138	1	C	5L	T2	T_138	Panel 9	Org	9-1
139	1	C	6H	T3	T_139	Panel 9	Grn	9-1
140	1	C	6L	T4	T_140	Panel 9	Brn	9-1
141	1	C	7H	T5	T_141	Panel 9	Blu/Wht	9-1
142	1	C	7L	T6	T_142	Panel 9	Org/Wht	9-1
143	1	C	8H	T7	T_143	Panel 9	Grn/Wht	9-1
144	1	C	8L	T8	T_144	Panel 9	Brn/Wht	9-1
145	1	C	9H	T9	T_145	Panel 9	Blu	9-2
146	1	C	9L	T10	T_146	Panel 9	Org	9-2
147	1	C	10H	T11	T_147	Panel 9	Grn	9-2
148	1	C	10L	T12	T_148	Panel 9	Brn	9-2
149	1	C	11H	T13	T_149	Panel 9	Blu/Wht	9-2
150	1	C	11L	T14	T_150	Panel 9	Org/Wht	9-2
151	1	C	12H	T15	T_151	Panel 9	Grn/Wht	9-2
152	1	C	12L	T16	T_152	Panel 9	Brn/Wht	9-2
153	1	C	13H	T17	T_153	Panel 9	Blu	9-3
154	1	C	13L	T1	T_154	Panel 10	Blu	10-1
155	1	C	14H	T2	T_155	Panel 10	Org	10-1
156	1	C	14L	T3	T_156	Panel 10	Grn	10-1
157	1	C	15H	T4	T_157	Panel 10	Brn	10-1
158	1	C	15L	T5	T_158	Panel 10	Blu/Wht	10-1
159	1	C	16H	T6	T_159	Panel 10	Org/Wht	10-1

Running Count	DAS	MUX	MUX Chan	Sensor Name	DAS Label	Location/ Panel	Wire Color	Cable
160	1	C	16L	T7	T_160	Panel 10	Grn/Wht	10-1
161	1	C	17H	T8	T_161	Panel 10	Brn/Wht	10-1
162	1	C	17L	T9	T_162	Panel 10	Blu	10-2
163	1	C	18H	T10	T_163	Panel 10	Org	10-2
164	1	C	18L	T11	T_164	Panel 10	Grn	10-2
165	1	C	19H	T12	T_165	Panel 10	Brn	10-2
166	1	C	19L	T13	T_166	Panel 10	Blu/Wht	10-2
167	1	C	20H	T14	T_167	Panel 10	Org/Wht	10-2
168	1	C	20L	T15	T_168	Panel 10	Grn/Wht	10-2
169	1	C	21H	T16	T_169	Panel 10	Brn/Wht	10-2
170	1	C	21L	T17	T_170	Panel 10	Blu	10-3
171	1	C	22H	T1	T_171	Panel 11	Blu	11-1
172	1	C	22L	T2	T_172	Panel 11	Org	11-1
173	1	C	23H	T3	T_173	Panel 11	Grn	11-1
174	1	C	23L	T4	T_174	Panel 11	Brn	11-1
175	1	C	24H	T5	T_175	Panel 11	Blu/Wht	11-1
176	1	C	24L	T6	T_176	Panel 11	Org/Wht	11-1
177	1	C	25H	T7	T_177	Panel 11	Grn/Wht	11-1
178	1	C	25L	T8	T_178	Panel 11	Brn/Wht	11-1
179	1	C	26H	T9	T_179	Panel 11	Blu	11-2
180	1	C	26L	T10	T_180	Panel 11	Org	11-2
181	1	C	27H	T11	T_181	Panel 11	Grn	11-2
182	1	C	27L	T12	T_182	Panel 11	Brn	11-2
183	1	C	28H	T13	T_183	Panel 11	Blu/Wht	11-2
184	1	C	28L	T14	T_184	Panel 11	Org/Wht	11-2
185	1	C	29H	T15	T_185	Panel 11	Grn/Wht	11-2
186	1	C	29L	T16	T_186	Panel 11	Brn/Wht	11-2
187	1	C	30H	T17	T_187	Panel 11	Blu	11-3
188	1	C	30L	T1	T_188	Panel 12	Blu	12-1
189	1	C	31H	T2	T_189	Panel 12	Org	12-1
190	1	C	31L	T3	T_190	Panel 12	Grn	12-1
191	1	C	32H	T4	T_191	Panel 12	Brn	12-1
192	1	C	32L	T5	T_192	Panel 12	Blu/Wht	12-1
193	1	D	1H	T6	T_193	Panel 12	Org/Wht	12-1
194	1	D	1L	T7	T_194	Panel 12	Grn/Wht	12-1
195	1	D	2H	T8	T_195	Panel 12	Brn/Wht	12-1
196	1	D	2L	T9	T_196	Panel 12	Blu	12-2
197	1	D	3H	T10	T_197	Panel 12	Org	12-2
198	1	D	3L	T11	T_198	Panel 12	Grn	12-2
199	1	D	4H	T12	T_199	Panel 12	Brn	12-2

Running Count	DAS	MUX	MUX Chan	Sensor Name	DAS Label	Location/ Panel	Wire Color	Cable
200	1	D	4L	T13	T_200	Panel 12	Blu/Wht	12-2
201	1	D	5H	T14	T_201	Panel 12	Org/Wht	12-2
202	1	D	5L	T15	T_202	Panel 12	Grn/Wht	12-2
203	1	D	6H	T16	T_203	Panel 12	Brn/Wht	12-2
204	1	D	6L	T17	T_204	Panel 12	Blu	12-3
205	1	D	7H	T1	T_205	Panel 13	Blu	13-1
206	1	D	7L	T2	T_206	Panel 13	Org	13-1
207	1	D	8H	T3	T_207	Panel 13	Grn	13-1
208	1	D	8L	T4	T_208	Panel 13	Brn	13-1
209	1	D	9H	T5	T_209	Panel 13	Blu/Wht	13-1
210	1	D	9L	T6	T_210	Panel 13	Org/Wht	13-1
211	1	D	10H	T7	T_211	Panel 13	Grn/Wht	13-1
212	1	D	10L	T8	T_212	Panel 13	Brn/Wht	13-1
213	1	D	11H	T9	T_213	Panel 13	Blu	13-2
214	1	D	11L	T10	T_214	Panel 13	Org	13-2
215	1	D	12H	T11	T_215	Panel 13	Grn	13-2
216	1	D	12L	T12	T_216	Panel 13	Brn	13-2
217	1	D	13H	T13	T_217	Panel 13	Blu/Wht	13-2
218	1	D	13L	T14	T_218	Panel 13	Org/Wht	13-2
219	1	D	14H	T15	T_219	Panel 13	Grn/Wht	13-2
220	1	D	14L	T16	T_220	Panel 13	Brn/Wht	13-2
221	1	D	15H	T17	T_221	Panel 13	Blu	13-3
222	1	D	15L	T1	T_222	Panel 14	Blu	14-1
223	1	D	16H	T2	T_223	Panel 14	Org	14-1
224	1	D	16L	T3	T_224	Panel 14	Grn	14-1
225	1	D	17H	T4	T_225	Panel 14	Brn	14-1
226	1	D	17L	T5	T_226	Panel 14	Blu/Wht	14-1
227	1	D	18H	T6	T_227	Panel 14	Org/Wht	14-1
228	1	D	18L	T7	T_228	Panel 14	Grn/Wht	14-1
229	1	D	19H	T8	T_229	Panel 14	Brn/Wht	14-1
230	1	D	19L	T9	T_230	Panel 14	Blu	14-2
231	1	D	20H	T10	T_231	Panel 14	Org	14-2
232	1	D	20L	T11	T_232	Panel 14	Grn	14-2
233	1	D	21H	T12	T_233	Panel 14	Brn	14-2
234	1	D	21L	T13	T_234	Panel 14	Blu/Wht	14-2
235	1	D	22H	T14	T_235	Panel 14	Org/Wht	14-2
236	1	D	22L	T15	T_236	Panel 14	Grn/Wht	14-2
237	1	D	23H	T16	T_237	Panel 14	Brn/Wht	14-2
238	1	D	23L	T17	T_238	Panel 14	Blu	14-3
239	1	D	24H	T1	T_239	Panel 15	Blu	15-1

Running Count	DAS	MUX	MUX Chan	Sensor Name	DAS Label	Location/ Panel	Wire Color	Cable
240	1	D	24L	T2	T_240	Panel 15	Org	15-1
241	1	D	25H	T3	T_241	Panel 15	Grn	15-1
242	1	D	25L	T4	T_242	Panel 15	Brn	15-1
243	1	D	26H	T5	T_243	Panel 15	Blu/Wht	15-1
244	1	D	26L	T6	T_244	Panel 15	Org/Wht	15-1
245	1	D	27H	T7	T_245	Panel 15	Grn/Wht	15-1
246	1	D	27L	T8	T_246	Panel 15	Brn/Wht	15-1
247	1	D	28H	T9	T_247	Panel 15	Blu	15-2
248	1	D	28L	T10	T_248	Panel 15	Org	15-2
249	1	D	29H	T11	T_249	Panel 15	Grn	15-2
250	1	D	29L	T12	T_250	Panel 15	Brn	15-2
251	1	D	30H	T13	T_251	Panel 15	Blu/Wht	15-2
252	1	D	30L	T14	T_252	Panel 15	Org/Wht	15-2
253	1	D	31H	T15	T_253	Panel 15	Grn/Wht	15-2
254	1	D	31L	T16	T_254	Panel 15	Brn/Wht	15-2
255	1	D	32H	T17	T_255	Panel 15	Blu	15-3
256	1	D	32L	open	T_256	Spare	Org	
257	1	E	1H	T1	T_257	Roof/Attic	Blu	R-1
258	1	E	1L	T2	T_258	Roof/Attic	Org	R-1
259	1	E	2H	T3	T_259	Roof/Attic	Grn	R-1
260	1	E	2L	T4	T_260	Roof/Attic	Brn	R-1
261	1	E	3H	T5	T_261	Roof/Attic	Blu/Wht	R-1
262	1	E	3L	T6	T_262	Roof/Attic	Org/Wht	R-1
263	1	E	4H	T7	T_263	Roof/Attic	Grn/Wht	R-1
264	1	E	4L	T8	T_264	Roof/Attic	Brn/Wht	R-1
265	1	E	5H	T1	T_265	Room 1	Blu	-
266	1	E	5L	T2	T_266	Room 1	Blu	-
267	1	E	6H	T3	T_267	Room 2	Blu	-
268	1	E	6L	T4	T_268	Room 2	Blu	-
269	1	E	7H	-	T_269	Room 1	Brn	1-3
270	1	E	7L	-	T_270	Room 1	Blu/Wht	-
271	1	E	8H	-	T_271	Room 1	Org/Wht	-
272	1	E	8L	-	T_272	Room 2	Brn	-
273	1	E	9H	-	T_273	Room 2	Blu/Wht	-
274	1	E	9L	-	T_274	Room 2	Org/Wht	-
275	1	E	10H	-	T_275	Attic/Reflex	Blu	-
276	1	E	10L	-	T_276	Attic/Reflex	Org	-
277	1	E	11H	-	T_277	Attic/Reflex	Grn	-
278	1	E	11L	-	T_278	Attic/Reflex	Brn	-
279	1	E	12H	-	T_279	Attic/Reflex	Blu/Wht	-

Running Count	DAS	MUX	MUX Chan	Sensor Name	DAS Label	Location/ Panel	Wire Color	Cable
280	1	E	12L	-	T_280	Attic/Supro	Blk	-
281	1	E	13H	-	T_281	Attic/Trad	Blk	-
282	1	E	13L	T1	T_282	Panel 19	Blu	19-1
283	1	E	14H	T2	T_283	Panel 19	Org	19-1
284	1	E	14L	T3	T_284	Panel 19	Grn	19-1
285	1	E	15H	T4	T_285	Panel 19	Brn	19-1
286	1	E	15L	T5	T_286	Panel 19	Blu/Wht	19-1
287	1	E	16H	T6	T_287	Panel 19	Org/Wht	19-1
288	1	E	16L	T7	T_288	Panel 19	Grn/Wht	19-1
289	1	E	17H	T8	T_289	Panel 19	Brn/Wht	19-1
290	1	E	17L	T9	T_290	Panel 19	Blu	19-2
291	1	E	18H	T10	T_291	Panel 19	Org	19-2
292	1	E	18L	T11	T_292	Panel 19	Grn	19-2
293	1	E	19H	T12	T_293	Panel 19	Brn	19-2
294	1	E	19L	T13	T_294	Panel 19	Blu/Wht	19-2
295	1	E	20H	T14	T_295	Panel 19	Org/Wht	19-2
296	1	E	20L	T15	T_296	Panel 19	Grn/Wht	19-2
297	1	E	21H	T16	T_297	Panel 19	Brn/Wht	19-2
298	1	E	21L	T17	T_298	Panel 20	Blu	19-3
299	1	E	22H	T1	T_299	Panel 20	Blu	20-1
300	1	E	22L	T2	T_300	Panel 20	Org	20-1
301	1	E	23H	T3	T_301	Panel 20	Grn	20-1
302	1	E	23L	T4	T_302	Panel 20	Brn	20-1
303	1	E	24H	T5	T_303	Panel 20	Blu/Wht	20-1
304	1	E	24L	T6	T_304	Panel 20	Org/Wht	20-1
305	1	E	25H	T7	T_305	Panel 20	Grn/Wht	20-1
306	1	E	25L	T8	T_306	Panel 20	Brn/Wht	20-1
307	1	E	26H	T9	T_307	Panel 20	Blu	20-2
308	1	E	26L	T10	T_308	Panel 20	Org	20-2
309	1	E	27H	T11	T_309	Panel 20	Grn	20-2
310	1	E	27L	T12	T_310	Panel 20	Brn	20-2
311	1	E	28H	T13	T_311	Panel 20	Blu/Wht	20-2
312	1	E	28L	T14	T_312	Panel 20	Org/Wht	20-2
313	1	E	29H	T15	T_313	Panel 20	Grn/Wht	20-2
314	1	E	29L	T16	T_314	Panel 20	Brn/Wht	20-2
315	1	E	30H	T17	T_315	Panel 20	Blu	20-3

Table 4: DAS 2 Sensor Listing

Running Count	DAS	MUX	MUX Chan	Sensor Name	DAS Label	Location/ Panel	Wire Color	Cable
1	2	A	1H	RH1	RH_1	Panel 1	Blu	1-5
2	2	A	1L	RH2	RH_2	Panel 1	Org	1-5
3	2	A	2H	RH3	RH_3	Panel 1	Grn	1-5
4	2	A	2L	RH4	RH_4	Panel 1	Brn	1-5
5	2	A	3H	RH5	RH_5	Panel 1	Blu/Wht	1-5
6	2	A	3L	RH6	RH_6	Panel 1	Org/Wht	1-5
7	2	A	4H	RH1	RH_7	Panel 2	Blu	2-5
8	2	A	4L	RH2	RH_8	Panel 2	Org	2-5
9	2	A	5H	RH3	RH_9	Panel 2	Grn	2-5
10	2	A	5L	RH4	RH_10	Panel 2	Brn	2-5
11	2	A	6H	RH5	RH_11	Panel 2	Blu/Wht	2-5
12	2	A	6L	RH6	RH_12	Panel 2	Org/Wht	2-5
13	2	A	7H	RH1	RH_13	Panel 3	Blu	3-5
14	2	A	7L	RH2	RH_14	Panel 3	Org	3-5
15	2	A	8H	RH3	RH_15	Panel 3	Grn	3-5
16	2	A	8L	RH4	RH_16	Panel 3	Brn	3-5
17	2	A	9H	RH5	RH_17	Panel 3	Blu/Wht	3-5
18	2	A	9L	RH6	RH_18	Panel 3	Org/Wht	3-5
19	2	A	10H	RH1	RH_19	Panel 4	Blu	4-5
20	2	A	10L	RH2	RH_20	Panel 4	Org	4-5
21	2	A	11H	RH3	RH_21	Panel 4	Grn	4-5
22	2	A	11L	RH4	RH_22	Panel 4	Brn	4-5
23	2	A	12H	RH5	RH_23	Panel 4	Blu/Wht	4-5
24	2	A	12L	RH6	RH_24	Panel 4	Org/Wht	4-5
25	2	A	13H	RH1	RH_25	Panel 5	Blu	5-5
26	2	A	13L	RH2	RH_26	Panel 5	Org	5-5
27	2	A	14H	RH3	RH_27	Panel 5	Grn	5-5
28	2	A	14L	RH4	RH_28	Panel 5	Brn	5-5
29	2	A	15H	RH5	RH_29	Panel 5	Blu/Wht	5-5
30	2	A	15L	RH6	RH_30	Panel 5	Org/Wht	5-5
31	2	A	16H	RH1	RH_31	Panel 6	Blu	6-5
32	2	A	16L	RH2	RH_32	Panel 6	Org	6-5
33	2	A	17H	RH3	RH_33	Panel 6	Grn	6-5
34	2	A	17L	RH4	RH_34	Panel 6	Brn	6-5
35	2	A	18H	RH5	RH_35	Panel 6	Blu/Wht	6-5
36	2	A	18L	RH6	RH_36	Panel 6	Org/Wht	6-5
37	2	A	19H	RH1	RH_37	Panel 7	Blu	7-5
38	2	A	19L	RH2	RH_38	Panel 7	Org	7-5
39	2	A	20H	RH3	RH_39	Panel 7	Grn	7-5

Running Count	DAS	MUX	MUX Chan	Sensor Name	DAS Label	Location/ Panel	Wire Color	Cable
40	2	A	20L	RH4	RH_40	Panel 7	Brn	7-5
41	2	A	21H	RH5	RH_41	Panel 7	Blu/Wht	7-5
42	2	A	21L	RH6	RH_42	Panel 7	Org/Wht	7-5
43	2	A	22H	RH1	RH_43	Panel 8	Blu	8-5
44	2	A	22L	RH2	RH_44	Panel 8	Org	8-5
45	2	A	23H	RH3	RH_45	Panel 8	Grn	8-5
46	2	A	23L	RH4	RH_46	Panel 8	Brn	8-5
47	2	A	24H	RH5	RH_47	Panel 8	Blu/Wht	8-5
48	2	A	24L	RH6	RH_48	Panel 8	Org/Wht	8-5
49	2	A	25H	RH1	RH_49	Panel 9	Blu	9-5
50	2	A	25L	RH2	RH_50	Panel 9	Org	9-5
51	2	A	26H	RH3	RH_51	Panel 9	Grn	9-5
52	2	A	26L	RH4	RH_52	Panel 9	Brn	9-5
53	2	A	27H	RH5	RH_53	Panel 9	Blu/Wht	9-5
54	2	A	27L	RH6	RH_54	Panel 9	Org/Wht	9-5
55	2	A	28H	RH1	RH_55	Panel 10	Blu	10-5
56	2	A	28L	RH2	RH_56	Panel 10	Org	10-5
57	2	A	29H	RH3	RH_57	Panel 10	Grn	10-5
58	2	A	29L	RH4	RH_58	Panel 10	Brn	10-5
59	2	A	30H	RH5	RH_59	Panel 10	Blu/Wht	10-5
60	2	A	30L	RH6	RH_60	Panel 10	Org/Wht	10-5
61	2	A	31H	RH1	RH_61	Panel 11	Blu	11-5
62	2	A	31L	RH2	RH_62	Panel 11	Org	11-5
63	2	A	32H	RH3	RH_63	Panel 11	Grn	11-5
64	2	A	32L	RH4	RH_64	Panel 11	Brn	11-5
65	2	B	1H	RH5	RH_65	Panel 11	Blu/Wht	11-5
66	2	B	1L	RH6	RH_66	Panel 11	Org/Wht	11-5
67	2	B	2H	RH1	RH_67	Panel 12	Blu	12-5
68	2	B	2L	RH2	RH_68	Panel 12	Org	12-5
69	2	B	3H	RH3	RH_69	Panel 12	Grn	12-5
70	2	B	3L	RH4	RH_70	Panel 12	Brn	12-5
71	2	B	4H	RH5	RH_71	Panel 12	Blu/Wht	12-5
72	2	B	4L	RH6	RH_72	Panel 12	Org/Wht	12-5
73	2	B	5H	RH1	RH_73	Panel 13	Blu	13-5
74	2	B	5L	RH2	RH_74	Panel 13	Org	13-5
75	2	B	6H	RH3	RH_75	Panel 13	Grn	13-5
76	2	B	6L	RH4	RH_76	Panel 13	Brn	13-5
77	2	B	7H	RH5	RH_77	Panel 13	Blu/Wht	13-5
78	2	B	7L	RH6	RH_78	Panel 13	Org/Wht	13-5
79	2	B	8H	RH1	RH_79	Panel 14	Blu	14-5

Running Count	DAS	MUX	MUX Chan	Sensor Name	DAS Label	Location/ Panel	Wire Color	Cable
80	2	B	8L	RH2	RH_80	Panel 14	Org	14-5
81	2	B	9H	RH3	RH_81	Panel 14	Grn	14-5
82	2	B	9L	RH4	RH_82	Panel 14	Brn	14-5
83	2	B	10H	RH5	RH_83	Panel 14	Blu/Wht	14-5
84	2	B	10L	RH6	RH_84	Panel 14	Org/Wht	14-5
85	2	B	11H	RH1	RH_85	Panel 15	Blu	15-5
86	2	B	11L	RH2	RH_86	Panel 15	Org	15-5
87	2	B	12H	RH3	RH_87	Panel 15	Grn	15-5
88	2	B	12L	RH4	RH_88	Panel 15	Brn	15-5
89	2	B	13H	RH5	RH_89	Panel 15	Blu/Wht	15-5
90	2	B	13L	RH6	RH_90	Panel 15	Org/Wht	15-5
91	2	B	14H	RH1	RH_91	Room 1, low	Org	-
92	2	B	14L	RH2	RH_92	Room 1, high	Org	-
93	2	B	15H	RH3	RH_93	Room 2, low	Org	-
94	2	B	15L	RH4	RH_94	Room 2, high	Org	-
95	2	B	16H	-	RH_95	Supro cav	Blu/Wht	R-2
96	2	B	16L	-	RH_96	Supro space	Org/Wht	R-2
97	2	B	17H	-	RH_97	Trad cav	Grn/Wht	R-2
98	2	B	17L	-	RH_98	Trad space	Brn/Wht	R-2
99	2	B	18H	-	RH_99	Rm 1, window	Grn/Wht	1-3
100	2	B	18L	-	RH_100	Rm 2, window	Grn/Wht	15-3
101	2	B	19H	-	RH_101	Reflex space	Blu/Wht	R-5
102	2	B	19L	-	RH_102	Reflex cav	Org/Wht	R-5
103	2	B	20H	RH1	RH_103	Panel 19	Blu	19-5
104	2	B	20L	RH2	RH_104	Panel 19	Org	19-5
105	2	B	21H	RH3	RH_105	Panel 19	Grn	19-5
106	2	B	21L	RH4	RH_106	Panel 19	Brn	19-5
107	2	B	22H	RH5	RH_107	Panel 19	Blu/Wht	19-5
108	2	B	22L	RH6	RH_108	Panel 19	Org/Wht	19-5
109	2	B	23H	RH1	RH_109	Panel 20	Blu	20-5
110	2	B	23L	RH2	RH_110	Panel 20	Org	20-5
111	2	B	24H	RH3	RH_111	Panel 20	Grn	20-5
112	2	B	24L	RH4	RH_112	Panel 20	Brn	20-5
113	2	B	25H	RH5	RH_113	Panel 20	Blu/Wht	20-5
114	2	B	25L	RH6	RH_114	Panel 20	Org/Wht	20-5
115	2	B	26H	RH1	RH_115	Panel 21	Blu	21-5
116	2	B	26L	RH2	RH_116	Panel 21	Org	21-5
117	2	B	27H	RH3	RH_117	Panel 21	Grn	21-5
118	2	B	27L	RH4	RH_118	Panel 21	Brn	21-5
119	2	B	28H	RH5	RH_119	Panel 21	Blu/Wht	21-5

Running Count	DAS	MUX	MUX Chan	Sensor Name	DAS Label	Location/ Panel	Wire Color	Cable
120	2	B	28L	RH6	RH_120	Panel 21	Org/Wht	21-5
121	2	B	29H	spare	RH_121	-	-	-
122	2	B	29L	spare	RH_122	-	-	-
123	2	B	30H	spare	RH_123	-	-	-
124	2	B	30L	spare	RH_124	-	-	-
125	2	B	31H	spare	RH_125	-	-	-
126	2	B	31L	spare	RH_126	-	-	-
127	2	B	32H	spare	RH_127	-	-	-
128	2	B	32L	spare	RH_128	-	-	-
129	2	C	1H	MC1	MC_1	Panel 1	Blu	1-4
130	2	C	1L	MC2	MC_2	Panel 1	Org	1-4
131	2	C	2H	MC3	MC_3	Panel 1	Grn	1-4
132	2	C	2L	MC4	MC_4	Panel 1	Brn	1-4
133	2	C	3H	MC5	MC_5	Panel 1	Blu/Wht	1-4
134	2	C	3L	MC6	MC_6	Panel 1	Org/Wht	1-4
135	2	C	4H	MC7	MC_7	Panel 1	Grn/Wht	1-4
136	2	C	4L	MC8	MC_8	Panel 1	Brn/Wht	1-4
137	2	C	5H	MC1	MC_9	Panel 2	Blu	2-4
138	2	C	5L	MC2	MC_10	Panel 2	Org	2-4
139	2	C	6H	MC3	MC_11	Panel 2	Grn	2-4
140	2	C	6L	MC4	MC_12	Panel 2	Brn	2-4
141	2	C	7H	MC5	MC_13	Panel 2	Blu/Wht	2-4
142	2	C	7L	MC6	MC_14	Panel 2	Org/Wht	2-4
143	2	C	8H	MC7	MC_15	Panel 2	Grn/Wht	2-4
144	2	C	8L	MC8	MC_16	Panel 2	Brn/Wht	2-4
145	2	C	9H	MC1	MC_17	Panel 3	Blu	3-4
146	2	C	9L	MC2	MC_18	Panel 3	Org	3-4
147	2	C	10H	MC3	MC_19	Panel 3	Grn	3-4
148	2	C	10L	MC4	MC_20	Panel 3	Brn	3-4
149	2	C	11H	MC5	MC_21	Panel 3	Blu/Wht	3-4
150	2	C	11L	MC6	MC_22	Panel 3	Org/Wht	3-4
151	2	C	12H	MC7	MC_23	Panel 3	Grn/Wht	3-4
152	2	C	12L	MC8	MC_24	Panel 3	Brn/Wht	3-4
153	2	C	13H	MC1	MC_25	Panel 4	Blu	4-4
154	2	C	13L	MC2	MC_26	Panel 4	Org	4-4
155	2	C	14H	MC3	MC_27	Panel 4	Grn	4-4
156	2	C	14L	MC4	MC_28	Panel 4	Brn	4-4
157	2	C	15H	MC5	MC_29	Panel 4	Blu/Wht	4-4
158	2	C	15L	MC6	MC_30	Panel 4	Org/Wht	4-4
159	2	C	16H	MC7	MC_31	Panel 4	Grn/Wht	4-4

Running Count	DAS	MUX	MUX Chan	Sensor Name	DAS Label	Location/ Panel	Wire Color	Cable
160	2	C	16L	MC8	MC_32	Panel 4	Brn/Wht	4-4
161	2	C	17H	MC1	MC_33	Panel 5	Blu	5-4
162	2	C	17L	MC2	MC_34	Panel 5	Org	5-4
163	2	C	18H	MC3	MC_35	Panel 5	Grn	5-4
164	2	C	18L	MC4	MC_36	Panel 5	Brn	5-4
165	2	C	19H	MC5	MC_37	Panel 5	Blu/Wht	5-4
166	2	C	19L	MC6	MC_38	Panel 5	Org/Wht	5-4
167	2	C	20H	MC7	MC_39	Panel 5	Grn/Wht	5-4
168	2	C	20L	MC8	MC_40	Panel 5	Brn/Wht	5-4
169	2	C	21H	MC1	MC_41	Panel 6	Blu	6-4
170	2	C	21L	MC2	MC_42	Panel 6	Org	6-4
171	2	C	22H	MC3	MC_43	Panel 6	Grn	6-4
172	2	C	22L	MC4	MC_44	Panel 6	Brn	6-4
173	2	C	23H	MC5	MC_45	Panel 6	Blu/Wht	6-4
174	2	C	23L	MC6	MC_46	Panel 6	Org/Wht	6-4
175	2	C	24H	MC7	MC_47	Panel 6	Grn/Wht	6-4
176	2	C	24L	MC8	MC_48	Panel 6	Brn/Wht	6-4
177	2	C	25H	MC1	MC_49	Panel 7	Blu	7-4
178	2	C	25L	MC2	MC_50	Panel 7	Org	7-4
179	2	C	26H	MC3	MC_51	Panel 7	Grn	7-4
180	2	C	26L	MC4	MC_52	Panel 7	Brn	7-4
181	2	C	27H	MC5	MC_53	Panel 7	Blu/Wht	7-4
182	2	C	27L	MC6	MC_54	Panel 7	Org/Wht	7-4
183	2	C	28H	MC7	MC_55	Panel 7	Grn/Wht	7-4
184	2	C	28L	MC8	MC_56	Panel 7	Brn/Wht	7-4
185	2	C	29H	MC1	MC_57	Panel 8	Blu	8-4
186	2	C	29L	MC2	MC_58	Panel 8	Org	8-4
187	2	C	30H	MC3	MC_59	Panel 8	Grn	8-4
188	2	C	30L	MC4	MC_60	Panel 8	Brn	8-4
189	2	C	31H	MC5	MC_61	Panel 8	Blu/Wht	8-4
190	2	C	31L	MC6	MC_62	Panel 8	Org/Wht	8-4
191	2	C	32H	MC7	MC_63	Panel 8	Grn/Wht	8-4
192	2	C	32L	MC8	MC_64	Panel 8	Brn/Wht	8-4
193	2	D	1H	MC1	MC_65	Panel 9	Blu	9-4
194	2	D	1L	MC2	MC_66	Panel 9	Org	9-4
195	2	D	2H	MC3	MC_67	Panel 9	Grn	9-4
196	2	D	2L	MC4	MC_68	Panel 9	Brn	9-4
197	2	D	3H	MC5	MC_69	Panel 9	Blu/Wht	9-4
198	2	D	3L	MC6	MC_70	Panel 9	Org/Wht	9-4
199	2	D	4H	MC7	MC_71	Panel 9	Grn/Wht	9-4

Running Count	DAS	MUX	MUX Chan	Sensor Name	DAS Label	Location/ Panel	Wire Color	Cable
200	2	D	4L	MC8	MC_72	Panel 9	Brn/Wht	9-4
201	2	D	5H	MC1	MC_73	Panel 10	Blu	10-4
202	2	D	5L	MC2	MC_74	Panel 10	Org	10-4
203	2	D	6H	MC3	MC_75	Panel 10	Grn	10-4
204	2	D	6L	MC4	MC_76	Panel 10	Brn	10-4
205	2	D	7H	MC5	MC_77	Panel 10	Blu/Wht	10-4
206	2	D	7L	MC6	MC_78	Panel 10	Org/Wht	10-4
207	2	D	8H	MC7	MC_79	Panel 10	Grn/Wht	10-4
208	2	D	8L	MC8	MC_80	Panel 10	Brn/Wht	10-4
209	2	D	9H	MC1	MC_81	Panel 11	Blu	11-4
210	2	D	9L	MC2	MC_82	Panel 11	Org	11-4
211	2	D	10H	MC3	MC_83	Panel 11	Grn	11-4
212	2	D	10L	MC4	MC_84	Panel 11	Brn	11-4
213	2	D	11H	MC5	MC_85	Panel 11	Blu/Wht	11-4
214	2	D	11L	MC6	MC_86	Panel 11	Org/Wht	11-4
215	2	D	12H	MC7	MC_87	Panel 11	Grn/Wht	11-4
216	2	D	12L	MC8	MC_88	Panel 11	Brn/Wht	11-4
217	2	D	13H	MC1	MC_89	Panel 12	Blu	12-4
218	2	D	13L	MC2	MC_90	Panel 12	Org	12-4
219	2	D	14H	MC3	MC_91	Panel 12	Grn	12-4
220	2	D	14L	MC4	MC_92	Panel 12	Brn	12-4
221	2	D	15H	MC5	MC_93	Panel 12	Blu/Wht	12-4
222	2	D	15L	MC6	MC_94	Panel 12	Org/Wht	12-4
223	2	D	16H	MC7	MC_95	Panel 12	Grn/Wht	12-4
224	2	D	16L	MC8	MC_96	Panel 12	Brn/Wht	12-4
225	2	D	17H	MC1	MC_97	Panel 13	Blu	12-4
226	2	D	17L	MC2	MC_98	Panel 13	Org	13-4
227	2	D	18H	MC3	MC_99	Panel 13	Grn	13-4
228	2	D	18L	MC4	MC_100	Panel 13	Brn	13-4
229	2	D	19H	MC5	MC_101	Panel 13	Blu/Wht	13-4
230	2	D	19L	MC6	MC_102	Panel 13	Org/Wht	13-4
231	2	D	20H	MC7	MC_103	Panel 13	Grn/Wht	13-4
232	2	D	20L	MC8	MC_104	Panel 13	Brn/Wht	13-4
233	2	D	21H	MC1	MC_105	Panel 13	Blu	13-4
234	2	D	21L	MC2	MC_106	Panel 14	Org	14-4
235	2	D	22H	MC3	MC_107	Panel 14	Grn	14-4
236	2	D	22L	MC4	MC_108	Panel 14	Brn	14-4
237	2	D	23H	MC5	MC_109	Panel 14	Blu/Wht	14-4
238	2	D	23L	MC6	MC_110	Panel 14	Org/Wht	14-4
239	2	D	24H	MC7	MC_111	Panel 14	Grn/Wht	14-4

Running Count	DAS	MUX	MUX Chan	Sensor Name	DAS Label	Location/ Panel	Wire Color	Cable
240	2	D	24L	MC8	MC_112	Panel 14	Brn/Wht	14-4
241	2	D	25H	C	MC_113	Panel 14	Blu	14-4
242	2	D	25L	MC2	MC_114	Panel 15	Org	15-4
243	2	D	26H	MC3	MC_115	Panel 15	Grn	15-4
244	2	D	26L	MC4	MC_116	Panel 15	Brn	15-4
245	2	D	27H	MC5	MC_117	Panel 15	Blu/Wht	15-4
246	2	D	27L	MC6	MC_118	Panel 15	Org/Wht	15-4
247	2	D	28H	MC7	MC_119	Panel 15	Grn/Wht	15-4
248	2	D	28L	MC8	MC_120	Panel 15	Brn/Wht	15-4
249	2	D	29H	MC1	MC_121	Roof/Supro	Blu	R-1
250	2	D	29L	MC2	MC_122	Roof/Supro	Org	R-1
251	2	D	30H	MC3	MC_123	Roof/Trad	Grn	R-1
252	2	D	30L	MC4	MC_124	Roof/Trad	Brn	R-1
253	2	D	31H	MC5	MC_125	Rm1/Window	Org	1-3
254	2	D	31L	MC6	MC_126	Rm1/Window	Grn	1-3
255	2	D	32H	MC7	MC_127	Rm2/Window	Org	15-3
256	2	D	32L	MC8	MC_128	Rm2/Window	Grn	15-3
321	2	F	1H	HFT1	HFT_1	Panel 1	Grn/Wht+	-
322	2	F	1L				Brn/Wht-	-
323	2	F	2H	HFT2	HFT_2	Panel 3	Grn/Wht+	-
324	2	F	2L				Brn/Wht-	-
325	2	F	3H	HFT3	HFT_3	Panel 5	Grn/Wht+	-
326	2	F	3L				Brn/Wht-	-
327	2	F	4H	HFT4	HFT_4	Panel 6	Grn/Wht+	-
328	2	F	4L				Brn/Wht-	-
329	2	F	5H	HFT5	HFT_5	Panel 9	Grn/Wht+	-
330	2	F	5L				Brn/Wht-	-
331	2	F	6H	HFT6	HFT_6	Panel 10	Grn/Wht+	-
332	2	F	6L				Brn/Wht-	-
333	2	F	7H	HFT7	HFT_7	Panel 11	Grn/Wht+	-
334	2	F	7L				Brn/Wht-	-
335	2	F	8H	HFT8	HFT_8	Panel 12	Grn/Wht+	-
336	2	F	8L				Brn/Wht-	-
337	2	F	9H	HFT9	HFT_9	Panel14	Grn/Wht+	-
338	2	F	9L				Brn/Wht-	-
339	2	F	10H	HFT10	HFT_10	Panel 15	Grn/Wht+	-
340	2	F	10L				Brn/Wht-	-
341	2	F	11H	HFT11	HFT11	Panel 19	Grn/Wht+	-
342	2	F	11L				Brn/Wht-	-
343	2	F	12H	HFT12	HFT12	Panel 20	Grn/Wht+	-

Running Count	DAS	MUX	MUX Chan	Sensor Name	DAS Label	Location/ Panel	Wire Color	Cable
344	2	F	12L				Brn/Wht-	-
345	2	F	13H	HFT13	HFT13	Panel 21	Grn/Wht+	-
346	2	F	13L				Brn/Wht-	-

Table 5: DAS 3 Sensor Listing

Running Count	DAS	MUX	MUX Chan	Sensor Name	DAS Label	Location/ Panel	Wire Color	Cable
1	3	A	1H	T1	T_3_1	Panel 1	Blu	21-1
2	3	A	1L	T2	T_3_2	Panel 1	Org	21-1
3	3	A	2H	T3	T_3_3	Panel 1	Grn	21-1
4	3	A	2L	T4	T_3_4	Panel 1	Brn	21-1
5	3	A	3H	T5	T_3_5	Panel 1	Blu/Wht	21-1
6	3	A	3L	T6	T_3_6	Panel 1	Org/Wht	21-1
7	3	A	4H	T7	T_3_7	Panel 1	Grn/Wht	21-1
8	3	A	4L	T8	T_3_8	Panel 1	Brn/Wht	21-1
9	3	A	5H	T9	T_3_9	Panel 1	Blu	21-2
10	3	A	5L	T10	T_3_10	Panel 1	Org	21-2
11	3	A	6H	T11	T_3_11	Panel 1	Grn	21-2
12	3	A	6L	T12	T_3_12	Panel 1	Brn	21-2
13	3	A	7H	T13	T_3_13	Panel 1	Blu/Wht	21-2
14	3	A	7L	T14	T_3_14	Panel 1	Org/Wht	21-2
15	3	A	8H	T15	T_3_15	Panel 1	Grn/Wht	21-2
16	3	A	8L	T16	T_3_16	Panel 1	Brn/Wht	21-2
17	3	A	9H	T17	T_3_17	Panel 1	Blu	21-3
18	3	A	9L	spare	T_3_18	spare	Blu	-
19	3	A	10H	spare	T_3_19	spare	Org	-
20	3	A	10L	spare	T_3_20	spare	Grn	-
21	3	A	11H	spare	T_3_21	spare	Brn	-
22	3	A	11L	spare	T_3_22	spare	Blu/Wht	-
23	3	A	12H	spare	T_3_23	spare	Org/Wht	-
24	3	A	12L	spare	T_3_24	spare	Grn/Wht	-
25	3	A	13H	spare	T_3_25	spare	Brn/Wht	-
26	3	A	13L	spare	T_3_26	spare	Blu	-
27	3	A	14H	spare	T_3_27	spare	Org	-
28	3	A	14L	spare	T_3_28	spare	Grn	-
29	3	A	15H	spare	T_3_29	spare	Brn	-
30	3	A	15L	spare	T_3_30	spare	Blu/Wht	-
31	3	A	16H	spare	T_3_31	spare	Org/Wht	-
32	3	A	16L	spare	T_3_32	spare	Grn/Wht	-
33	3	A	17H	spare	T_3_33	spare	Brn/Wht	-

Running Count	DAS	MUX	MUX Chan	Sensor Name	DAS Label	Location/ Panel	Wire Color	Cable
34	3	A	17L	spare	T_3_34	spare	Blu	-
35	3	A	18H	spare	T_3_35	spare	Blu	-
36	3	A	18L	spare	T_3_36	spare	Org	-
37	3	A	19H	spare	T_3_37	spare	Grn	-
38	3	A	19L	spare	T_3_38	spare	Brn	-
39	3	A	20H	spare	T_3_39	spare	Blu/Wht	-
40	3	A	20L	spare	T_3_40	spare	Org/Wht	-
41	3	A	21H	spare	T_3_41	spare	Grn/Wht	-
42	3	A	21L	spare	T_3_42	spare	Brn/Wht	-
43	3	A	22H	spare	T_3_43	spare	Blu	-
44	3	A	22L	spare	T_3_44	spare	Org	-
45	3	A	23H	spare	T_3_45	spare	Grn	-
46	3	A	23L	spare	T_3_46	spare	Brn	-
47	3	A	24H	spare	T_3_47	spare	Blu/Wht	-
48	3	A	24L	spare	T_3_48	spare	Org/Wht	-
49	3	A	25H	spare	T_3_49	spare	Grn/Wht	-
50	3	A	25L	spare	T_3_50	spare	Brn/Wht	-
51	3	A	26H	spare	T_3_51	spare	Blu	-
52	3	A	26L	spare	T_3_52	spare	Blu	-
53	3	A	27H	spare	T_3_53	spare	Org	-
54	3	A	27L	spare	T_3_54	spare	Grn	-
55	3	A	28H	spare	T_3_55	spare	Brn	-
56	3	A	28L	spare	T_3_56	spare	Blu/Wht	-
57	3	A	29H	spare	T_3_57	spare	Org/Wht	-
58	3	A	29L	spare	T_3_58	spare	Grn/Wht	-
59	3	A	30H	spare	T_3_59	spare	Brn/Wht	-
60	3	A	30L	spare	T_3_60	spare	Blu	-
61	3	A	31H	spare	T_3_61	spare	Org	-
62	3	A	31L	spare	T_3_62	spare	Grn	-
63	3	A	32H	spare	T_3_63	spare	Brn	-
64	3	A	32L	spare	T_3_64	spare	Blu/Wht	-
1	3	B	1H	MC1	MC_3_1	Panel 19	Blu	19-4
2	3	B	1L	MC2	MC_3_2	Panel 19	Org	19-4
3	3	B	2H	MC3	MC_3_3	Panel 19	Grn	19-4
4	3	B	2L	MC4	MC_3_4	Panel 19	Brn	19-4
5	3	B	3H	MC5	MC_3_5	Panel 19	Blu/Wht	19-4
6	3	B	3L	MC6	MC_3_6	Panel 19	Org/Wht	19-4
7	3	B	4H	MC7	MC_3_7	Panel 19	Grn/Wht	19-4
8	3	B	4L	MC8	MC_3_8	Panel 19	Brn/Wht	19-4
9	3	B	5H	MC1	MC_3_9	Panel 20	Blu	20-4

Running Count	DAS	MUX	MUX Chan	Sensor Name	DAS Label	Location/ Panel	Wire Color	Cable
10	3	B	5L	MC2	MC_3_10	Panel 20	Org	20-4
11	3	B	6H	MC3	MC_3_11	Panel 20	Grn	20-4
12	3	B	6L	MC4	MC_3_12	Panel 20	Brn	20-4
13	3	B	7H	MC5	MC_3_13	Panel 20	Blu/Wht	20-4
14	3	B	7L	MC6	MC_3_14	Panel 20	Org/Wht	20-4
15	3	B	8H	MC7	MC_3_15	Panel 20	Grn/Wht	20-4
16	3	B	8L	MC8	MC_3_16	Panel 20	Brn/Wht	20-4
17	3	B	9H	MC1	MC_3_17	Panel 21	Blu	21-4
18	3	B	9L	MC2	MC_3_18	Panel 21	Org	21-4
19	3	B	10H	MC3	MC_3_19	Panel 21	Grn	21-4
20	3	B	10L	MC4	MC_3_20	Panel 21	Brn	21-4
21	3	B	11H	MC5	MC_3_21	Panel 21	Blu/Wht	21-4
22	3	B	11L	MC6	MC_3_22	Panel 21	Org/Wht	21-4
23	3	B	12H	MC7	MC_3_23	Panel 21	Grn/Wht	21-4
24	3	B	12L	MC8	MC_3_24	Panel 21	Brn/Wht	21-4

Conclusions

This report provides the details for each instrument used in the EIMA/DOE/ORNL wall research project. The data acquition system and data transfer is also detailed.

Based on the 1.5 year past history, all glitches in the monitoring system have been corrected and hourly data (averaged during the hour) are being recording for latter analysis. A reliable experimental system has been developed for this project.