Experimental Data and Programs Useful for Burnup Credit

Mark DeHart
Oak Ridge National Laboratory
June 2002

UT-BATTELLE

Overview

- Chemical assay data provides valuable validation information on the ability to predict isotopic concentrations.
- Additional data is necessary to validate criticality calculations.
- Because of the lack of prototypic spent-fuel criticals, different approaches are necessary to validate in a piecemeal fashion.
- Several classes of experiments have been proposed to fill the validation gap.

Experiments Pertinent To Burnup Credit

- Fresh Fuel Criticals (LEU, Pu, MOX)
- Integral Measurements of Spent Fuel in Representative Critical Systems
- Reactivity Measurements of Spent Fuel
- Reactivity Measurements of Fission Products & Minor Actinides
- Commercial Reactor Critical Configurations (CRC)

Fresh Fuel Criticals (LEU, Pu, MOX)

- Extensive validation with LEU lattices enriched to 4%, - good results, some higher enrichment data becoming available.
- Generally calculate 1 to 2% high on thermal plutonium systems, limited data.
- Reasonably good results with MOX pin lattices, depending on Pu-240 content and H/X ratio.

Integral Measurements of Spent Fuel in Representative Critical Systems

- ISPN Valduc - Ongoing and proprietary
  - HTC (simulated high burnup) actinide only pins (4.5% IE, 37.5GWD/MTU) in storage and transportation configurations (156 experiments)
  - Measurements for 6 highest-worth fission products - FP solution surrounded by fresh and HTC fuel pin matrix

Reactivity Measurements of Spent Fuel

- CERES- Measurements of 10 cm length samples of actinide-only and 60 GWD/MTU PWR SNF pins in DIMPLE & MINERVE, proprietary.
- REBUS - Zero power reactor measurement on three PWR bundles (20, 30, 50 to 60 GWD/MTU), Isotopics on major actinides & 18 fission products. Proposed completion after 2002.
- LWR-PROTEUS, oscillation of 9 □ 9 PWR pins (40 to 80 GWD/MTU), extensive isotopics, proposed.
- NRAD-ANL-West, TRIGA with spectral modifiers, oscillation samples- **proposed** reactivity worths on pins for Surry, Turkey Point, TMI-1fuels & CERES FP samples.

Reactivity Measurements of Fission Products & Minor Actinides

- CERES - 12 major FP samples measured in two DIMPLE & one MINERVE (PWR) assemblies, oscillation worths good to 2%. Proprietary. Additional proposed measurements in NRAD & SHEBA
- SNL - NERI measurements, a few select FP samples in simulated PWR lattices, various pin/pitch ratios, in progress. Will measure Rh-103, Sm-149, others.

Commercial Reactor Critical Configurations (CRC)

- Good experience with extensive analyses of PWR zero-power restarts at beginning- , mid-, and end-of-cycle.
- Large quantities of fuel with burnups greater than 30 GWD/MTU.
- Reactivity contribution from the SNF to the reactor critical state is an issue.
- Importance of dissimilarities between critical reactors and subcritical casks is an issue.

HTC experiments

***PART 1* :**
Simple array (18 exp.)

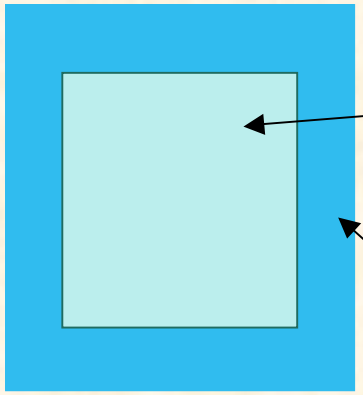

Rods array
5 pitches

Pure
water

***PART 3* :**
Storage (26 exp.)

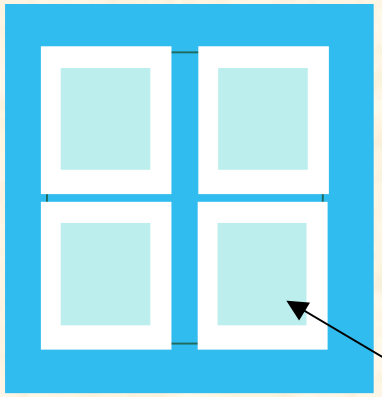

Pitch = 1.6 cm

Assemblies
in **canister**

borated steel or Cd or boral
or not

***PART 2* :**
Dissolution, pool (41 exp.)

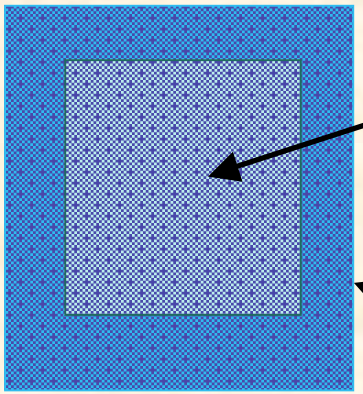

Rods array
4 pitches

water
+ (Gd or B)

***PART 4* :**
Transport (81 exp.)

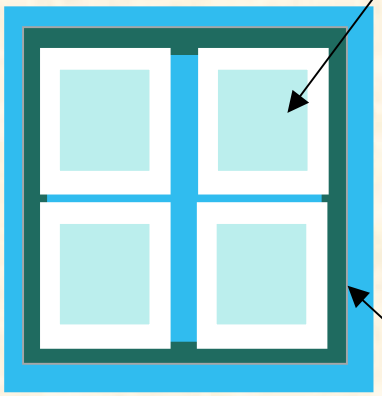

Lead or steel
reflector

HTC RODS
("Haut Taux de Combustion" = "high burn-up" rods)

UO_2 PUO_2

1.1 % $\frac{Pu}{U + Pu}$

1.56 % ^{235}U enriched uranium

^{238}Pu / ^{239}Pu / ^{240}Pu / ^{241}Pu / ^{242}Pu
= 1.3 / 59.2 / 24.3 / 10.1 / 5

Composition of U (4.5) O_2 rod irradiated until 37 500 MWj t^{-1} without fission products

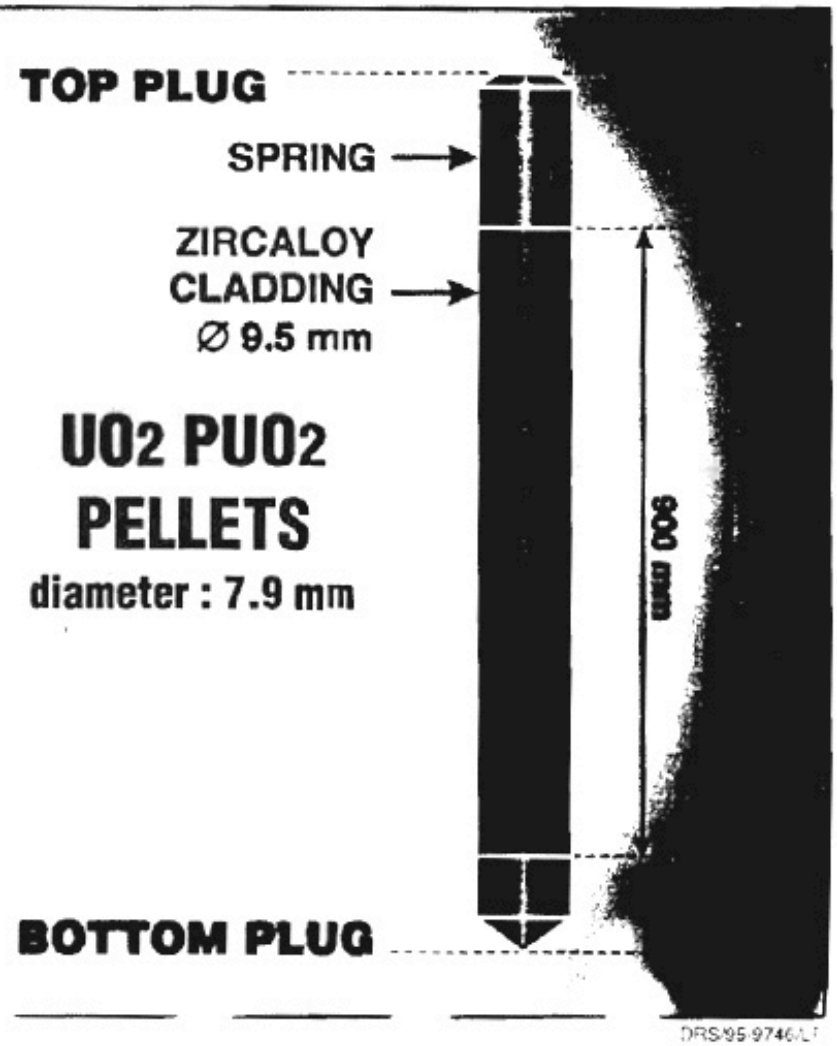

IPSN Fission Product Measurements

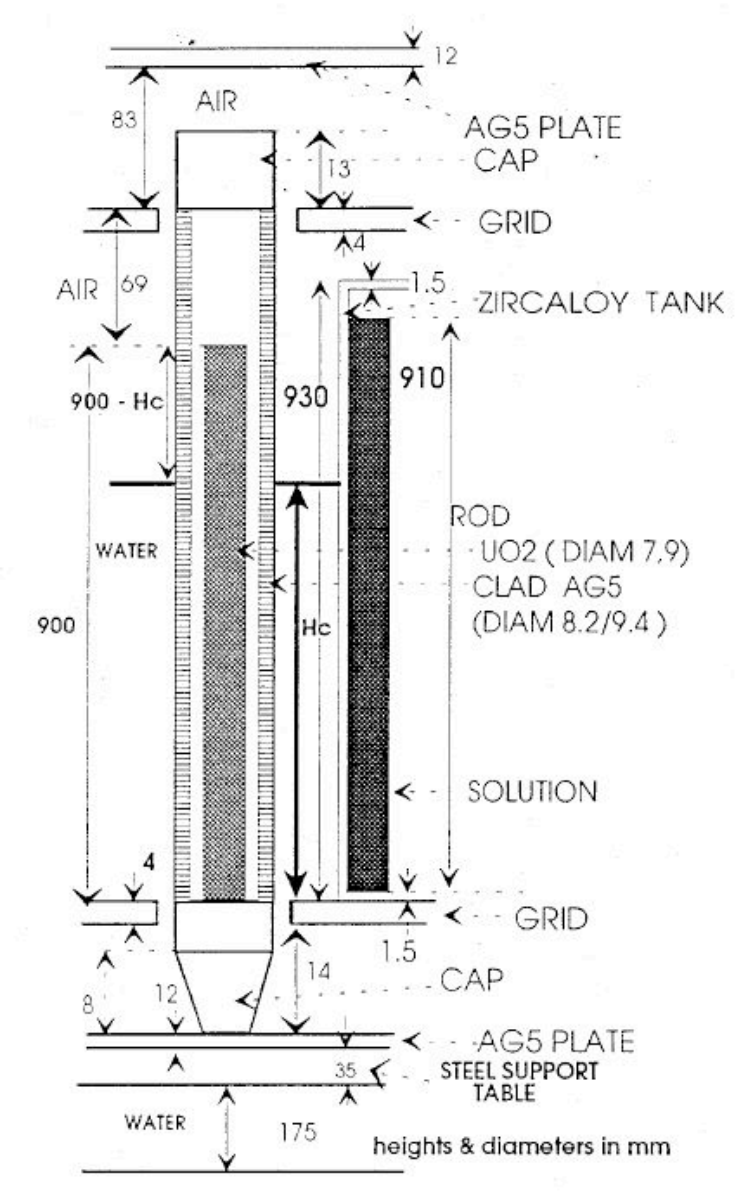

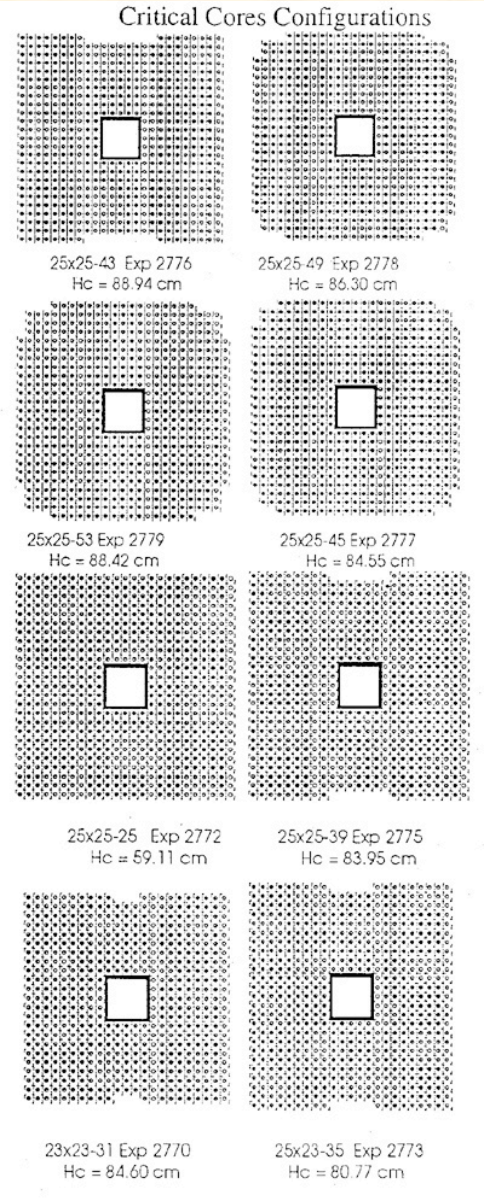

REBUS

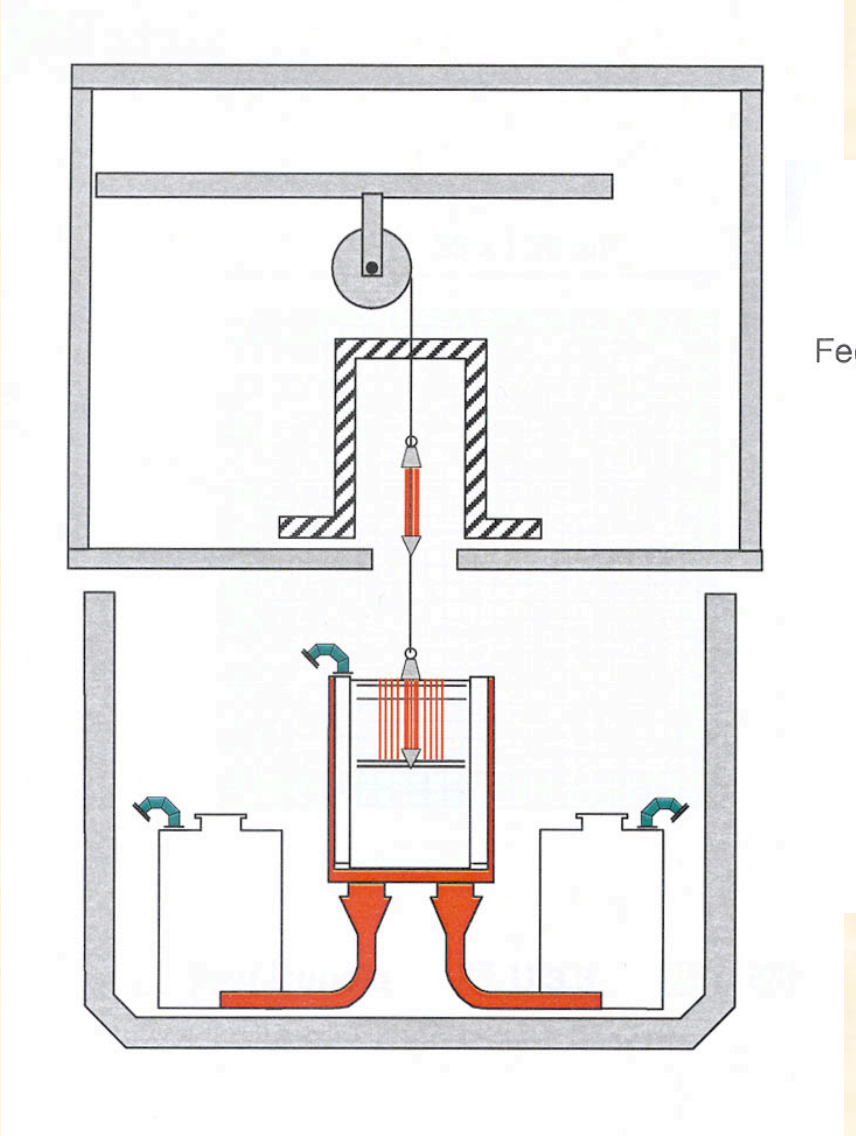

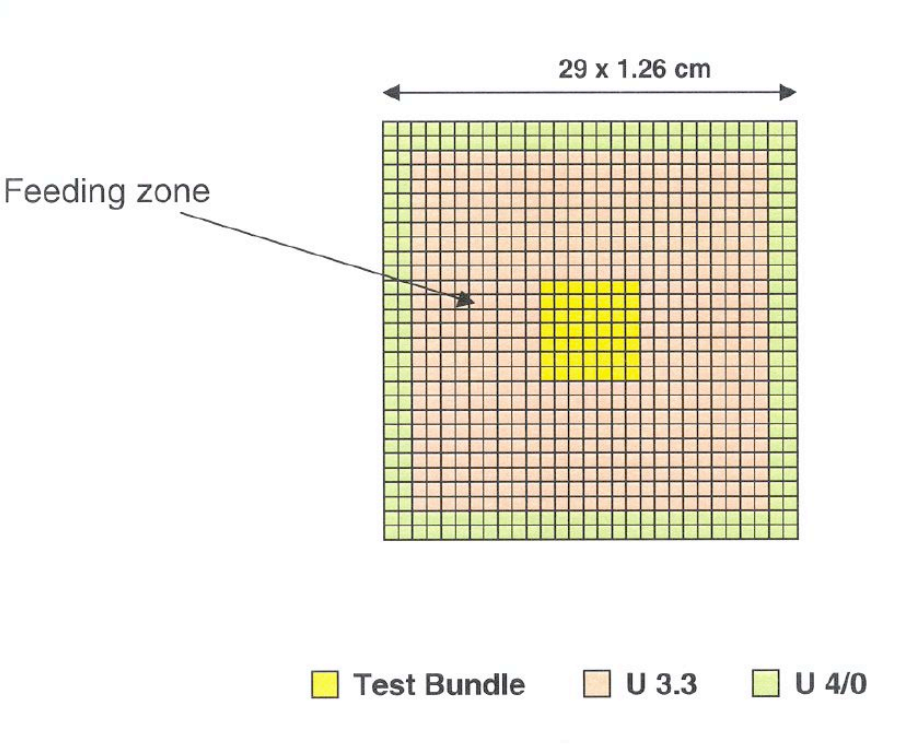

PROTEUS

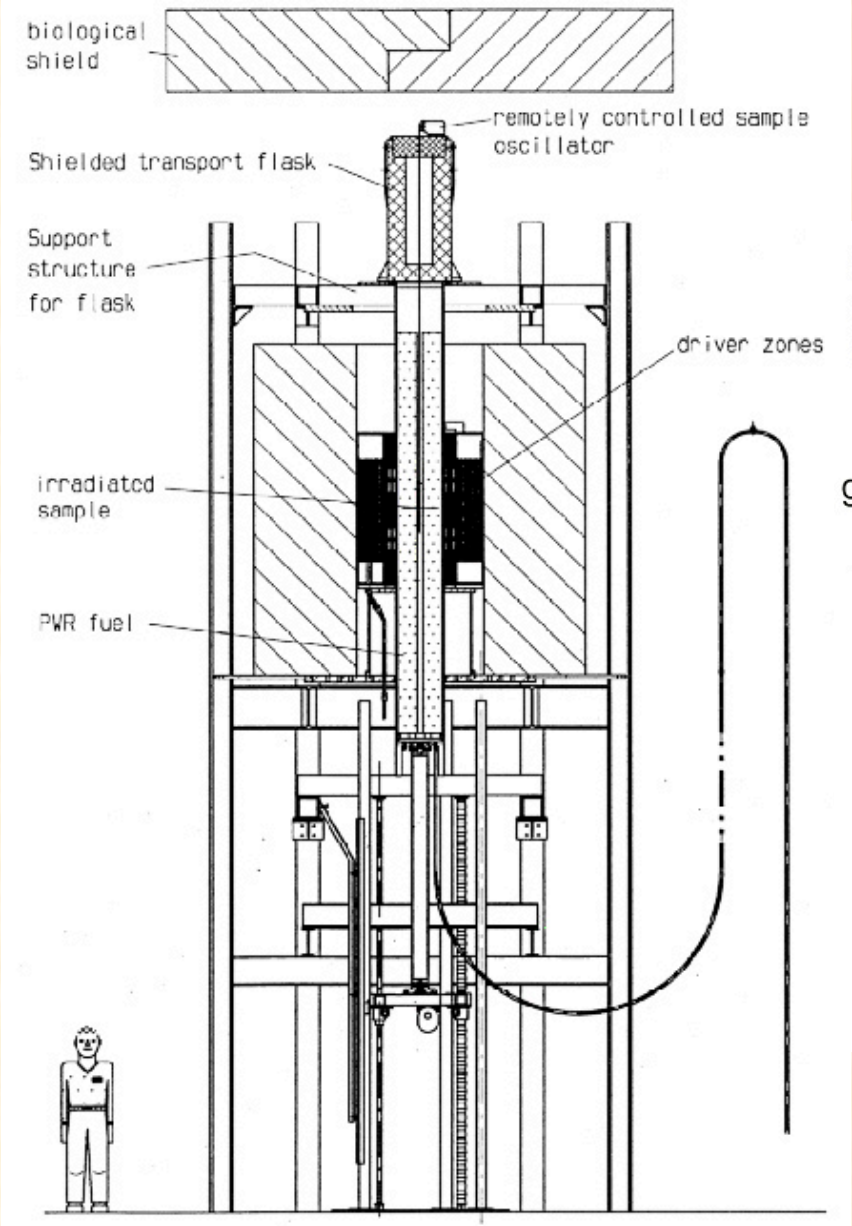
biological shield
remotely controlled sample oscillator
Shielded transport flask
Support structure for flask
driver zones
irradiated sample
PWR fuel

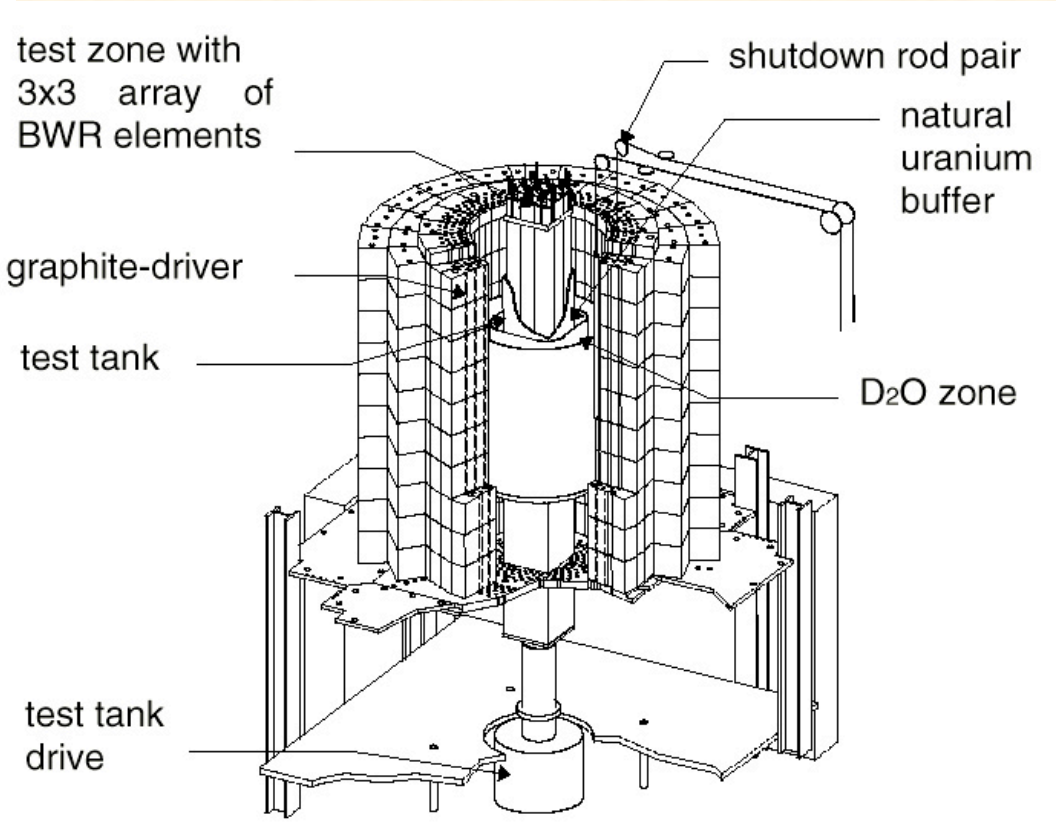
test zone with 3x3 array of BWR elements
shutdown rod pair
natural uranium buffer
graphite-driver
test tank
D2O zone
test tank drive

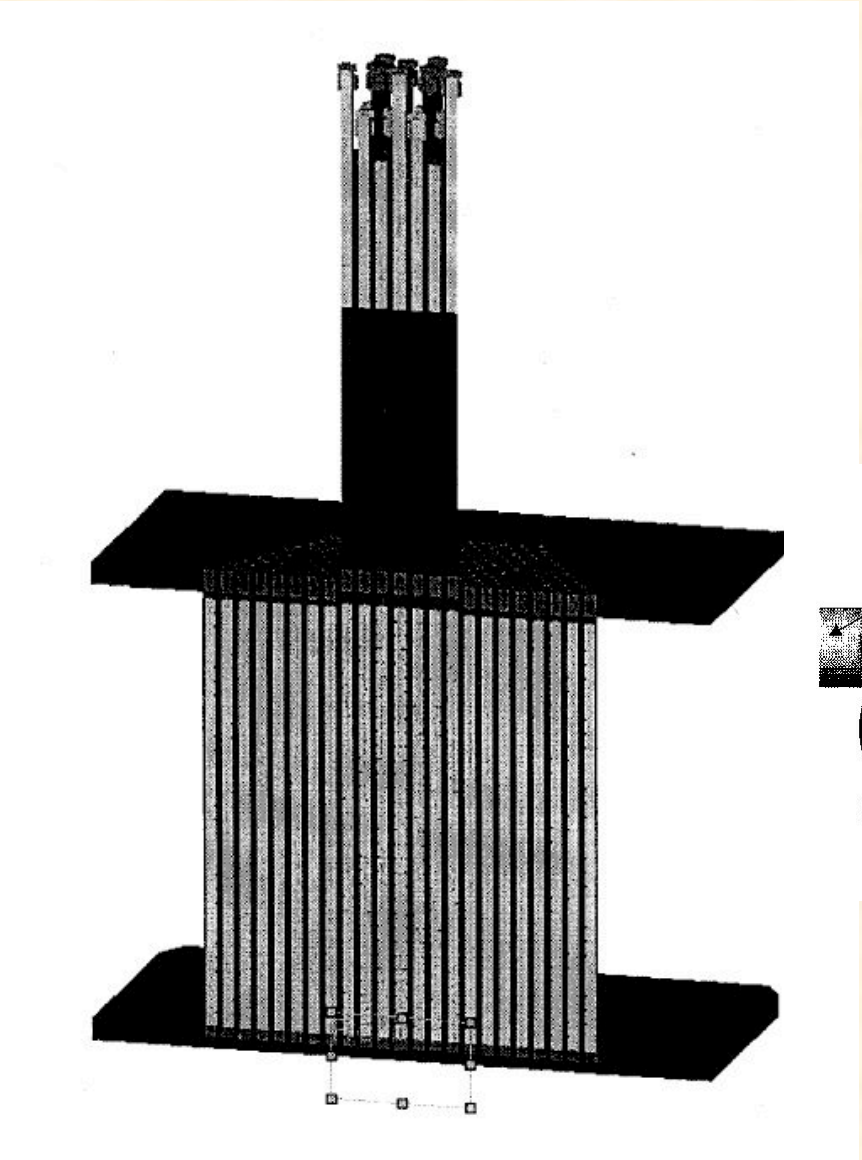

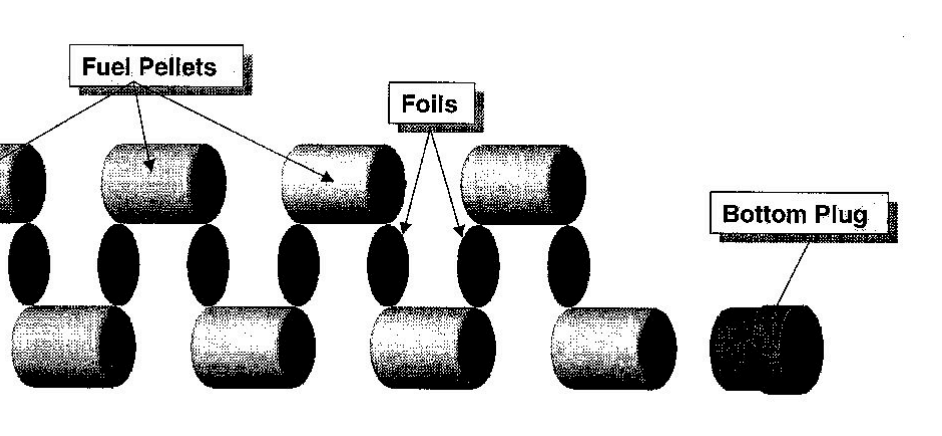
Fuel Pellets
Foils
Bottom Plug

CRC Analyses
(From YMP Presentation, PIRT-II Meeting, US NRC)

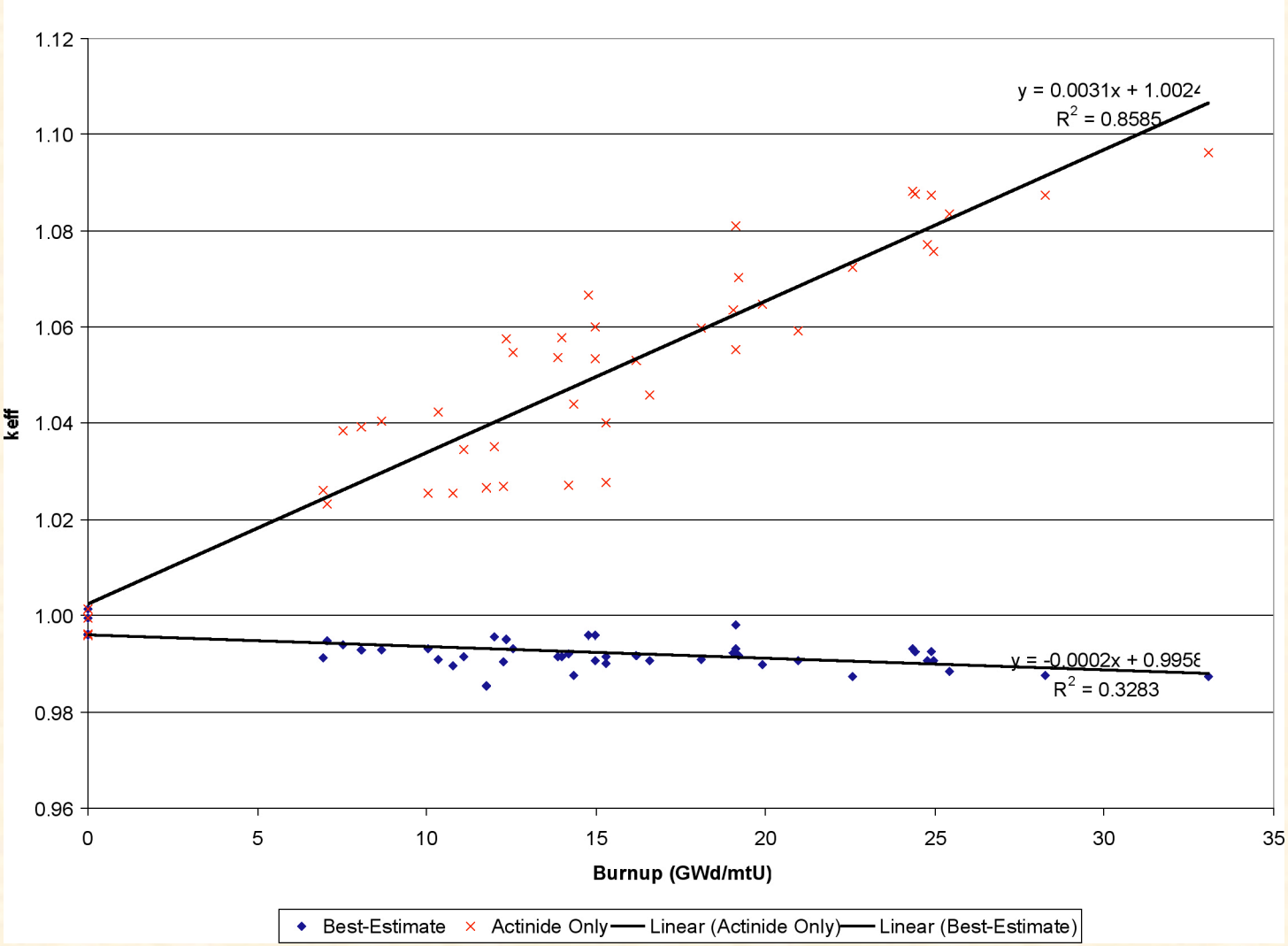

Conclusions

- Numerous and diverse sources of data are available for differential and integral validation of spent fuel criticality calculations.
- No consensus has been established on the nature of experiments necessary to adequately validate spent fuel configurations.
- NRC has not provided specific guidance for criticality validation.