U.S. Department of Energy
Superconductivity for Electric Systems
Electric Infrastucture Needs
3 August 2001 Washington, DC

Analytical Needs For Transmission Modernization

Understanding the Problem

Paul M. Grant

Science Fellow

Electric Power Research Institute

Palo Alto, California USA

U.S. Department of Energy

Superconductivity for Electric Systems

Electric Infrastucture Needs

3 August 2001 Washington, DC

"The Problem"

Wired Magazine, June 2001

"The Reality"

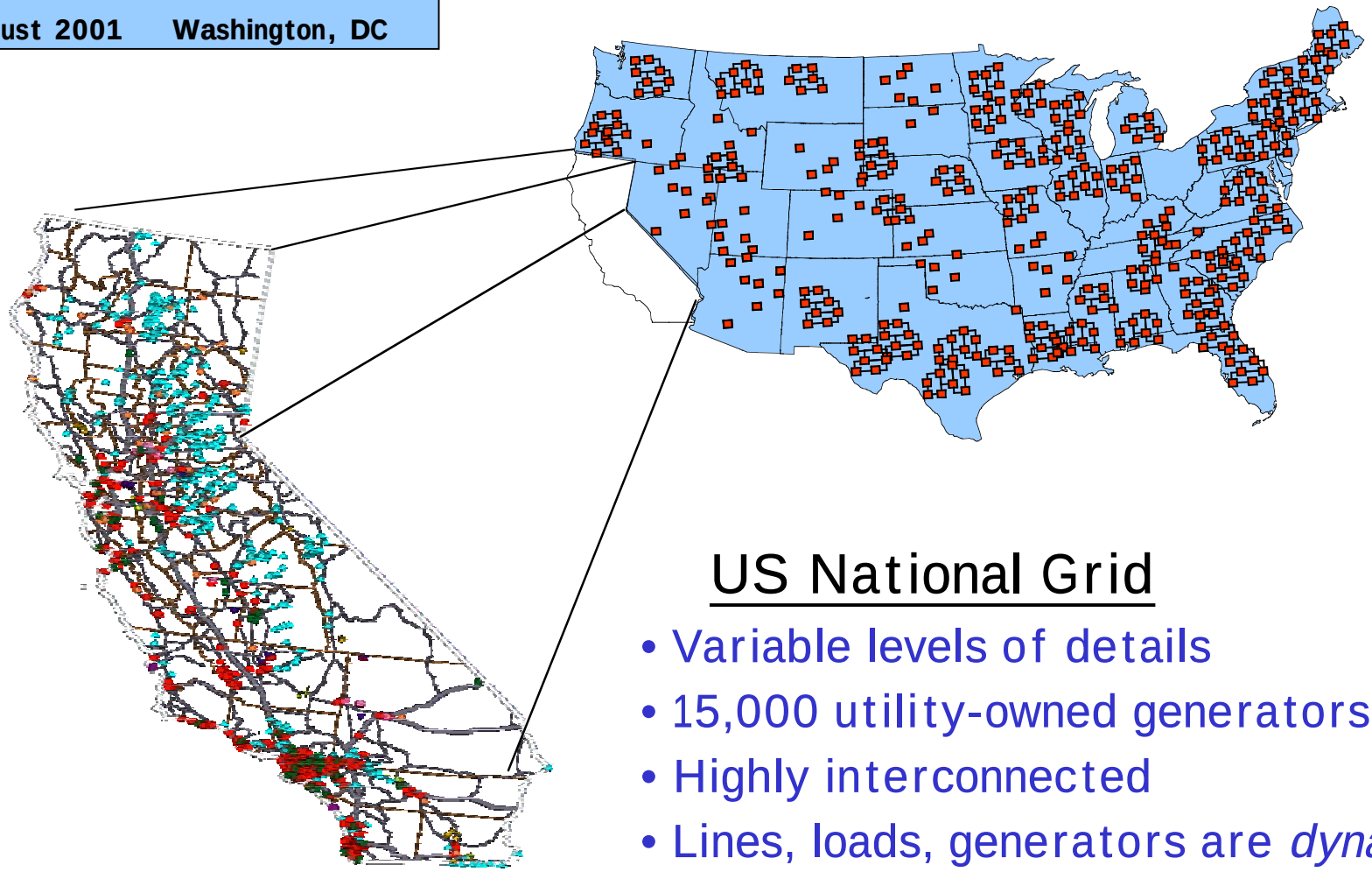

US National Grid

- Variable levels of details
- 15,000 utility-owned generators
- Highly interconnected
- Lines, loads, generators are *dynamic*

"The Understanding"

Analyzing & Modelling the National Grid

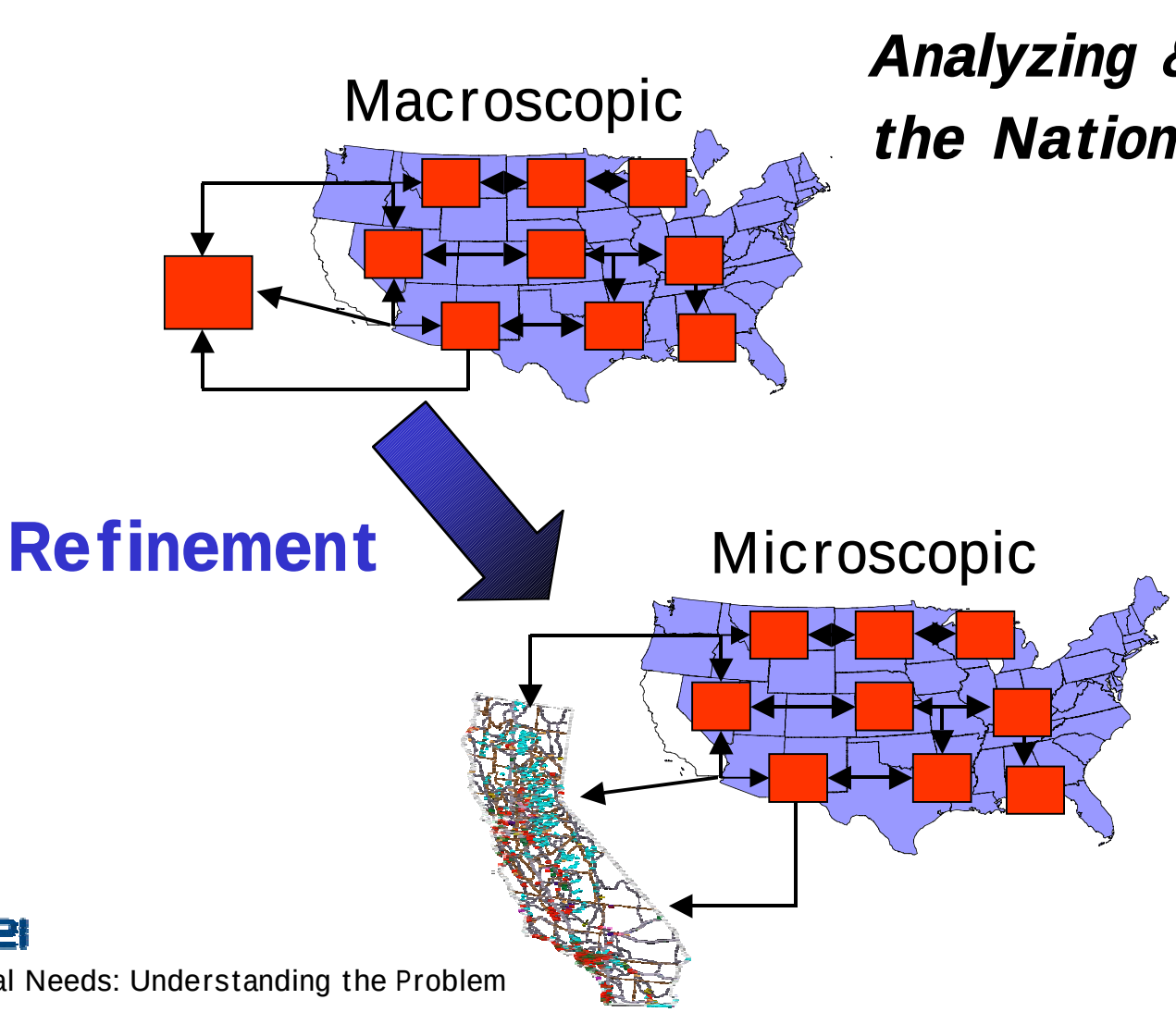

Paul M. Grant
3 August 2001

EPRI/DoD CIN/SI

Complex Interactive Networks/Systems Initiative

- Analysis/modeling of interdependent infrastructures with distributed intelligence and self-healing abilities
- Joint innovative research: EPRI/SecDef/ARO (5 Years/$30 M)
- Government Industry Cooperative University Research
- Information at:
  - http://www.epri.com/targetST.asp?program=83
  - Massoud Amin, mamin@epri.com

CIN/S Paradigm

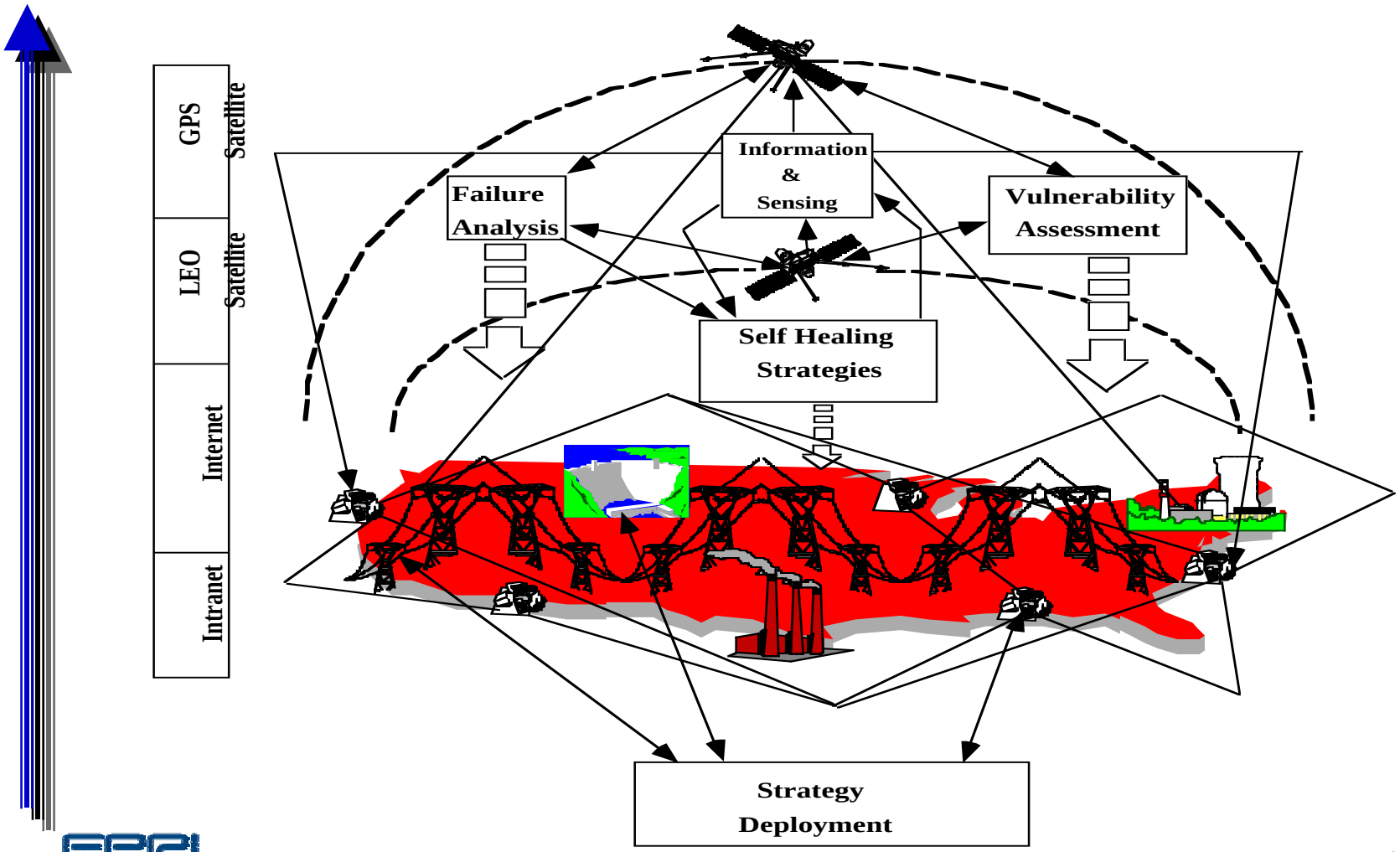

CIN/S Initiative: Funded Consortia

- U Washington, Arizona St., Iowa St., VPI
- Purdue, U Tennessee, Fisk U, TVA, ComEd (Exelon)
- Harvard, UMass, Boston, MIT, Washington U.
- Cornell, UC-Berkeley, GWU, Illinois, Washington St., Wisconsin
- CMU, RPI, UTAM, Minnesota, Illinois
- Cal Tech, MIT, Illinois, UC-SB, UCLA, Stanford

- Defense Against Catastrophic Failures, vulnerability assessment
- Intelligent Management of the Power Grid
- Modeling and Diagnosis Methods
- Minimizing Failures While Maintaining Efficiency / Stochastic Analysis of Network Performance
- Context Dependent Network Agents
- Mathematical Foundations: Efficiency & robustness of distributed systems

Testing on WSCC9-Buses System

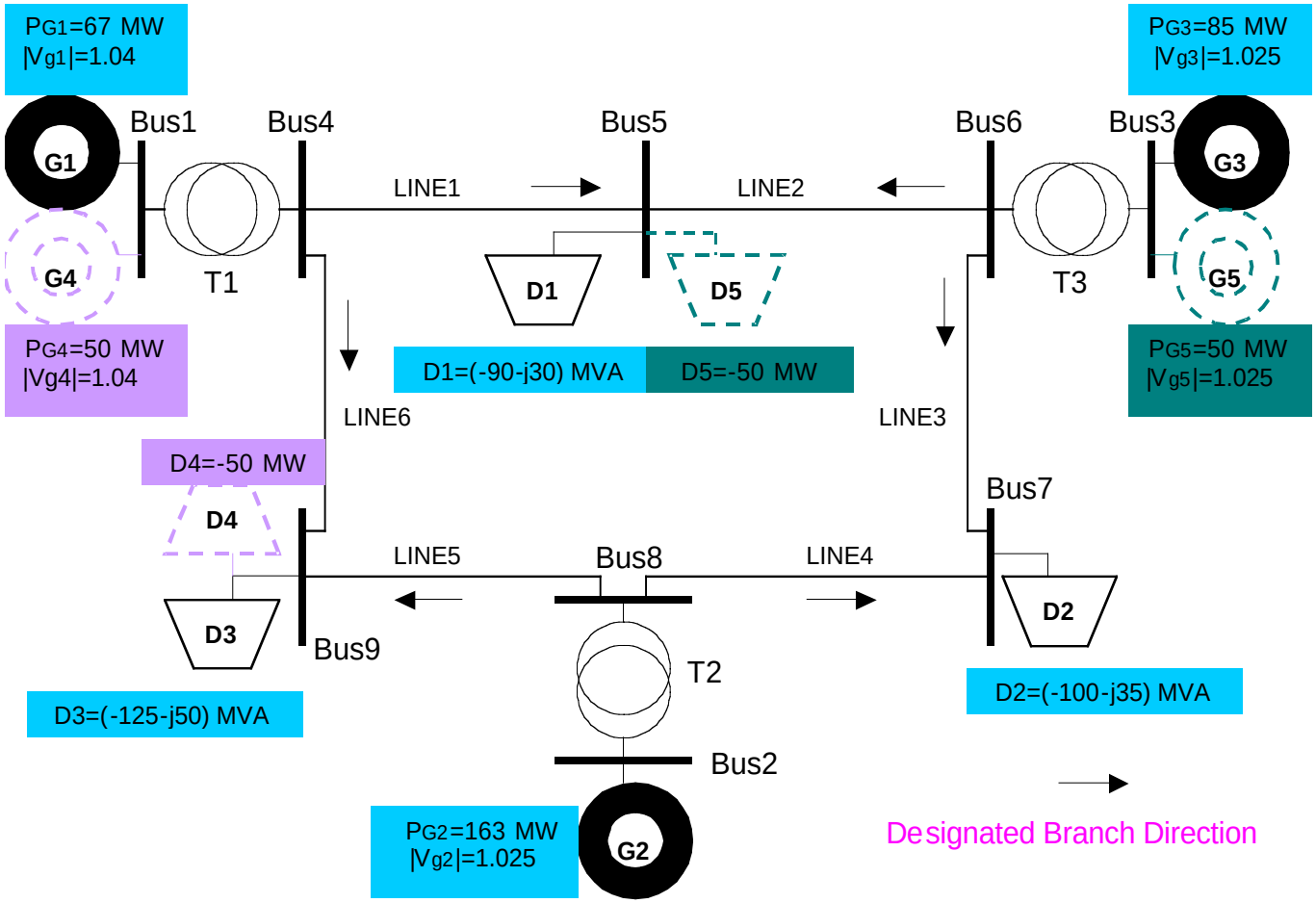

Diagram of The WSCC 9 Bus Test System & Preferred Exchange Schedules

TAMU 9-Bus Western Grid Model

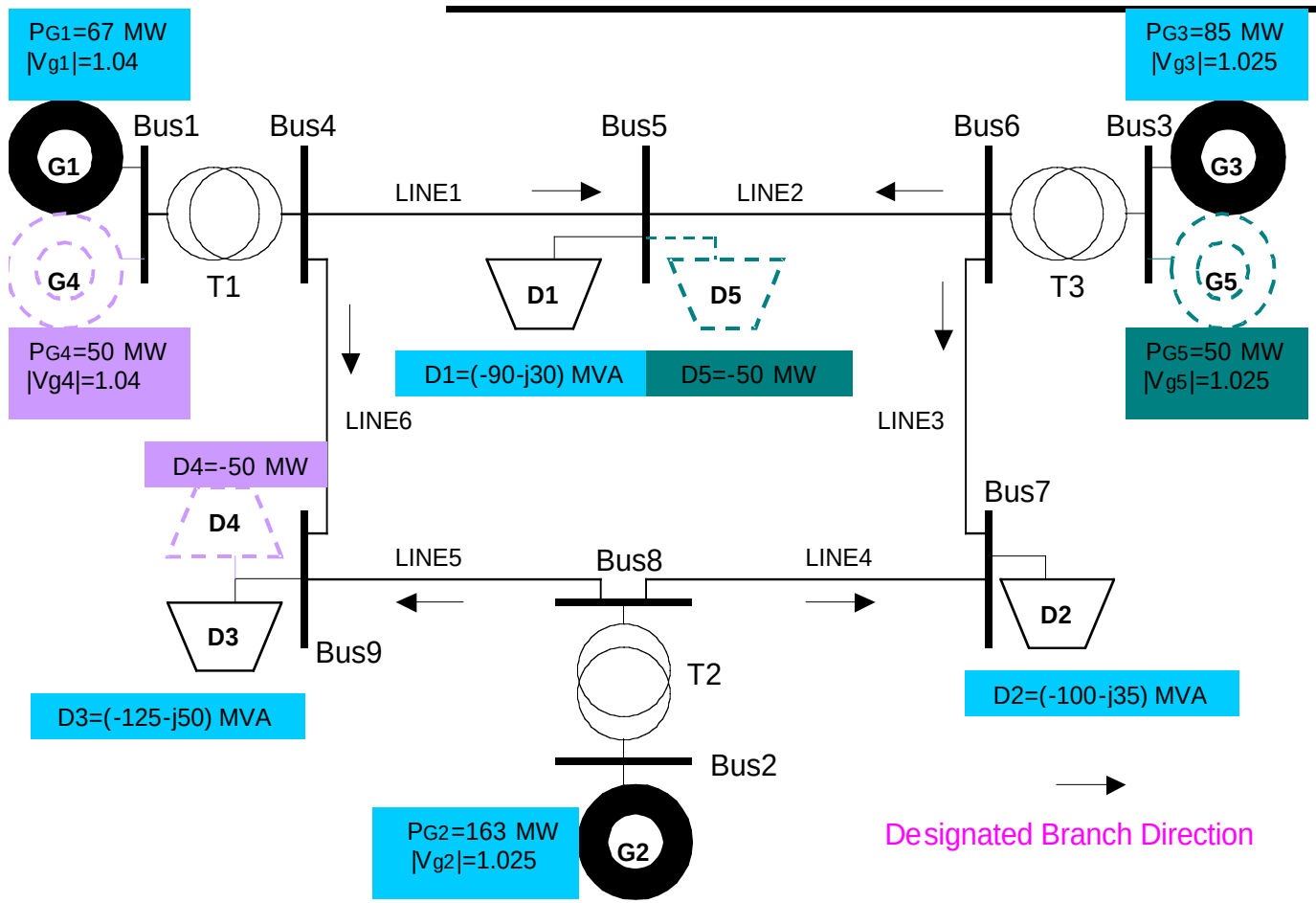

Diagram of The WSCC 9 Bus Test System & Preferred Exchange Schedules

Paul M. Grant
3 August 2001

Features of the TAMU Model

- **Decompose** complex AC power flows directly into transaction components, based on Physical Laws.
- **Evaluate** interaction quantities of different energy transactions on power flows and losses
- **Characterize** effects of reactive power scheduling on active power flows and transmission losses
- **SMALL** decomposition errors for realistic transmission grids through choosing an appropriate reference angle.
- **SIMPLE** and fast computation routines.

"Our Solution"

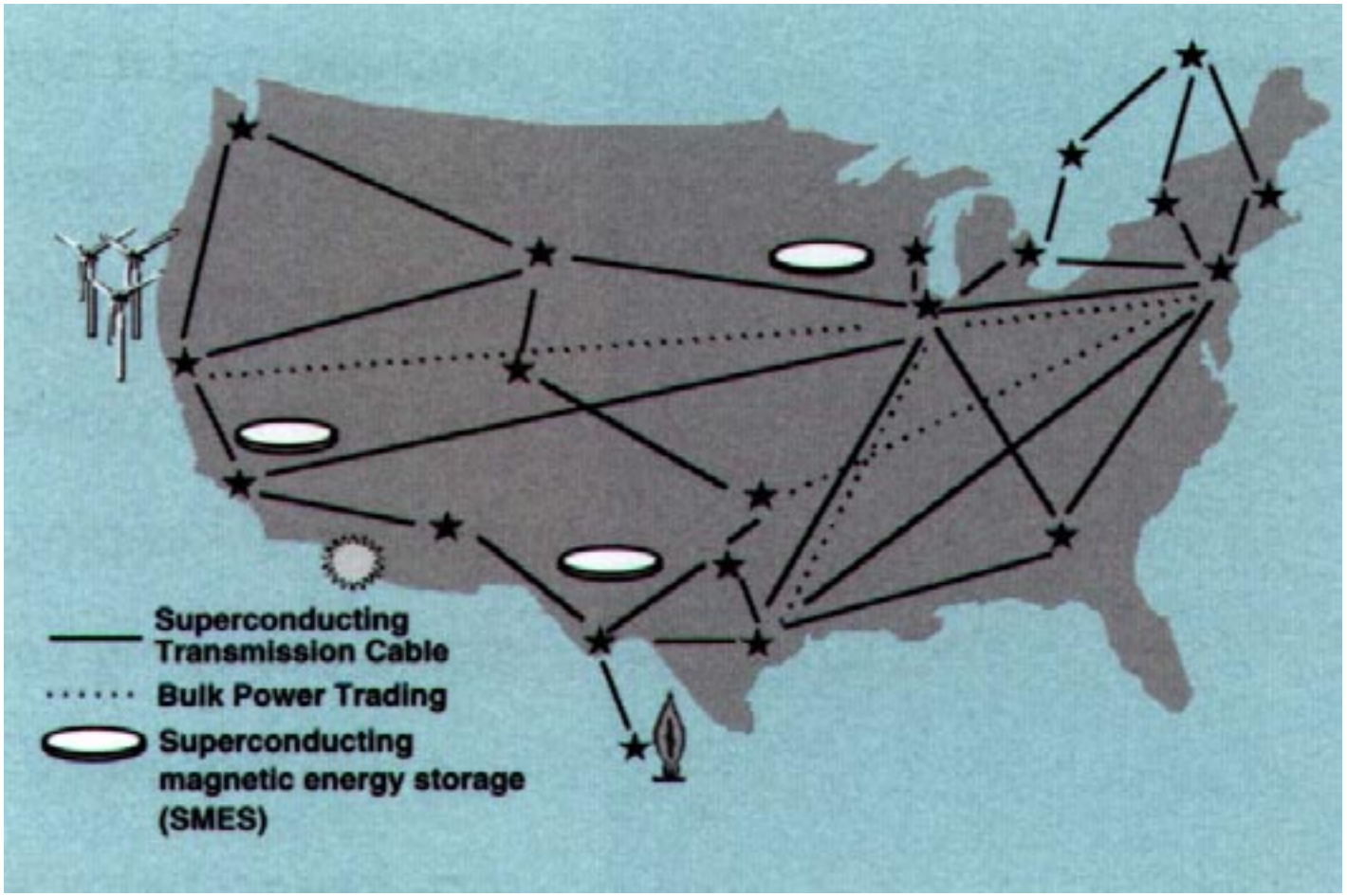

Superconducting Superhighway

"Our Solution"

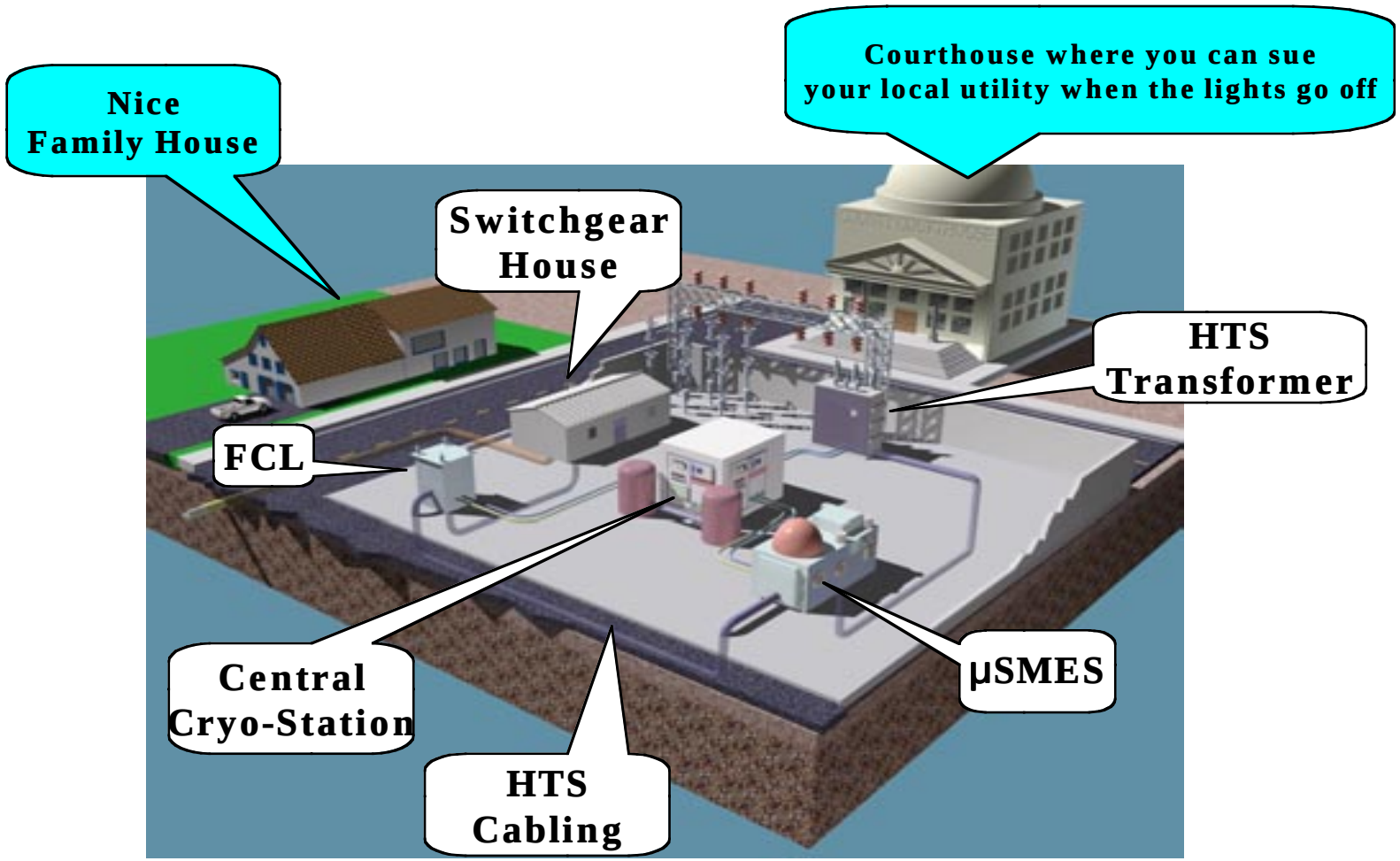

All-Superconducting Substation

Superconductivity Issues

Effects Special to SC upon Insertion into Grid Operation and Analysis

- Generation/End Use Dynamics
  - Different Inertial Response
  - Different Fault Response
- Transmission Dynamics
  - Much Lower Line Losses/Power Delivered
  - Different Fault Characteristics

Ivscdc Ring Bus

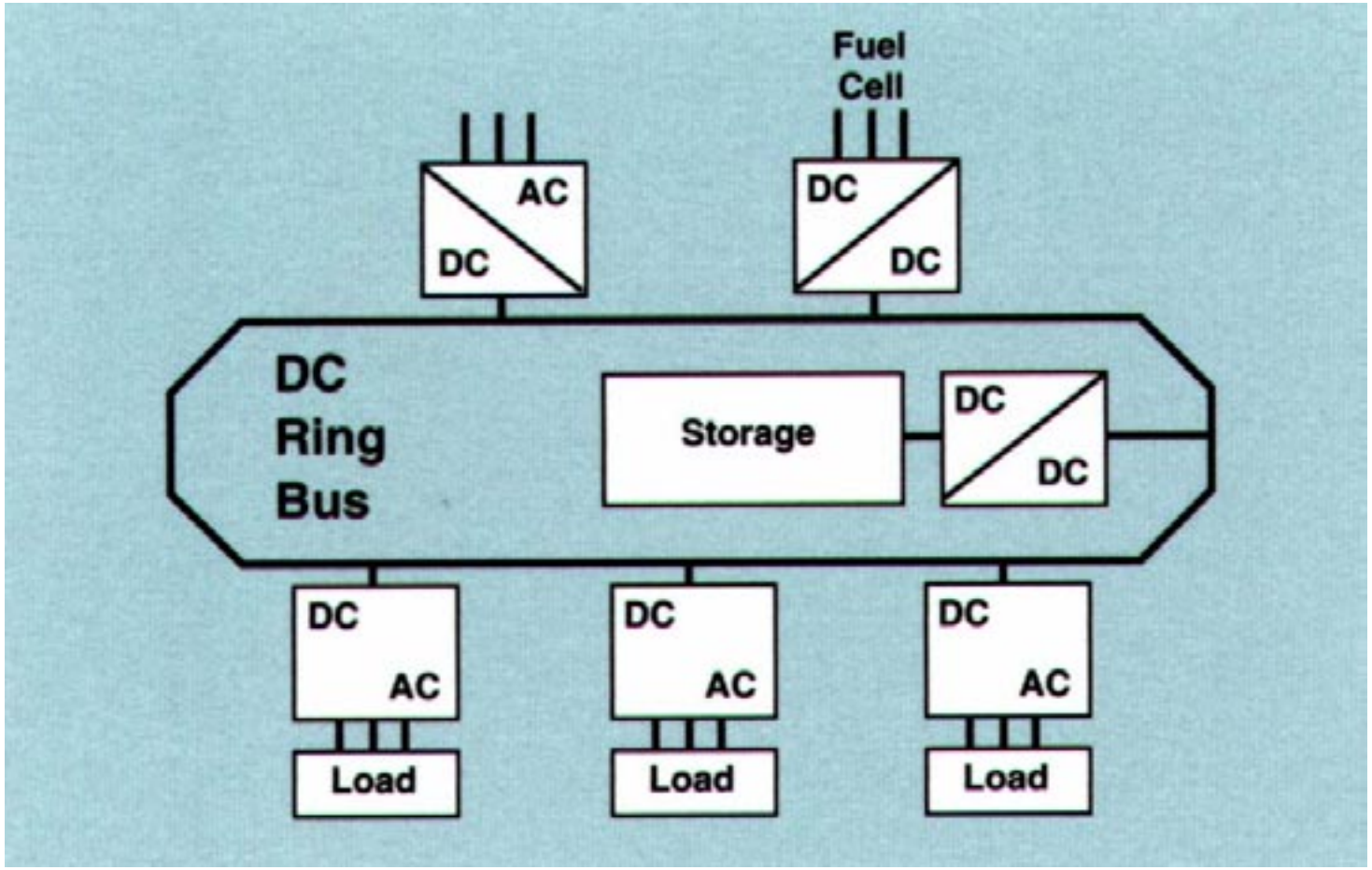

lvscdc Mesh

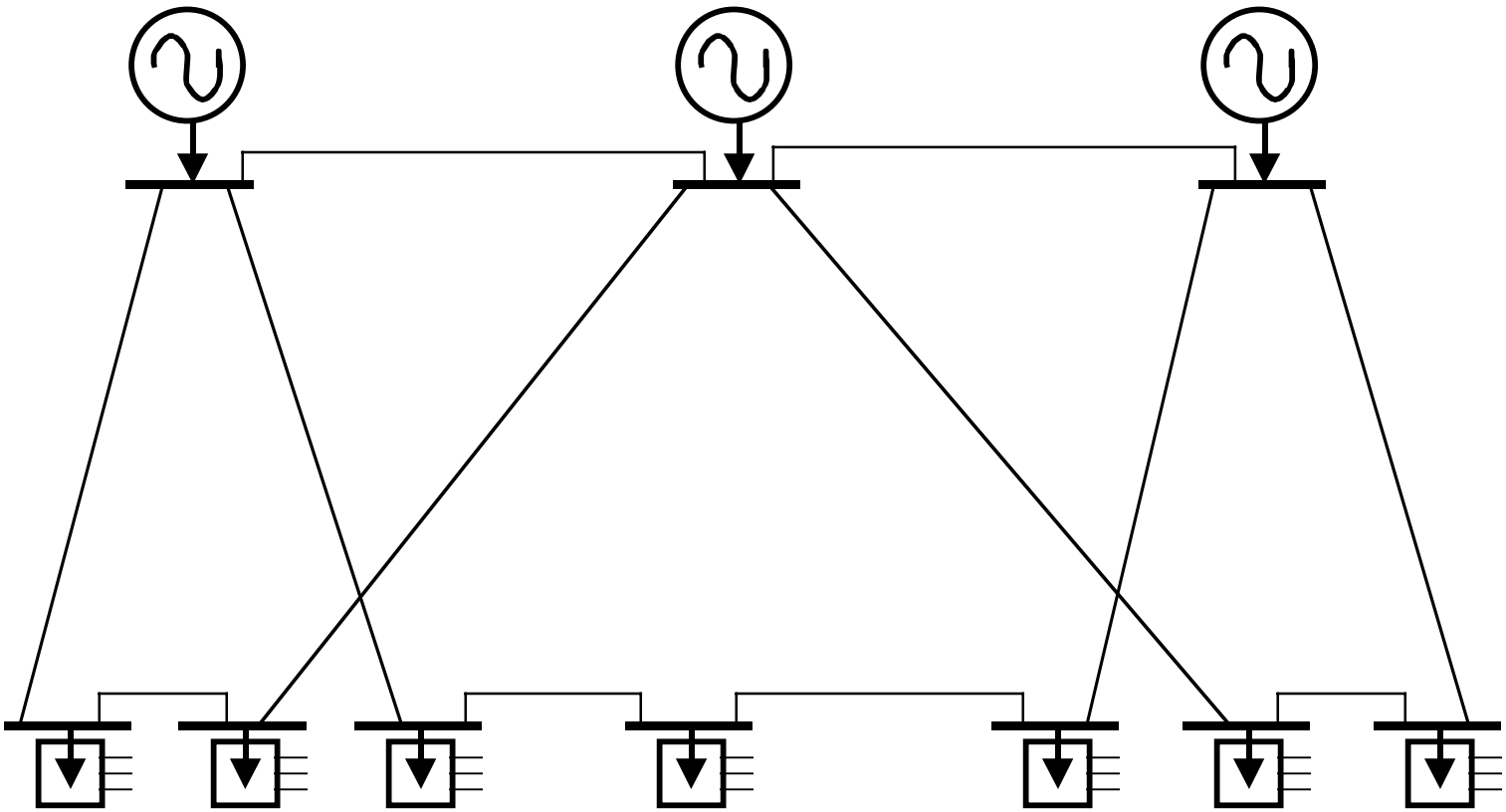

Superconducting LVDC Networks

Lasseter, Alvarado, Divan

EPRI TR-103636 (1994)

Our Mission (1)

- Infiltrate the CIN/S Community
  - Start attending their conferences
  - Become a node on their network
- Educate the CIN/S Community
  - Create awareness of the special issues superconductivity poses for grid analysis
- Bring Back Homework for Ourselves
  - Special sc power app designs (e.g., go to dc?)

Context: R&D Expenditures

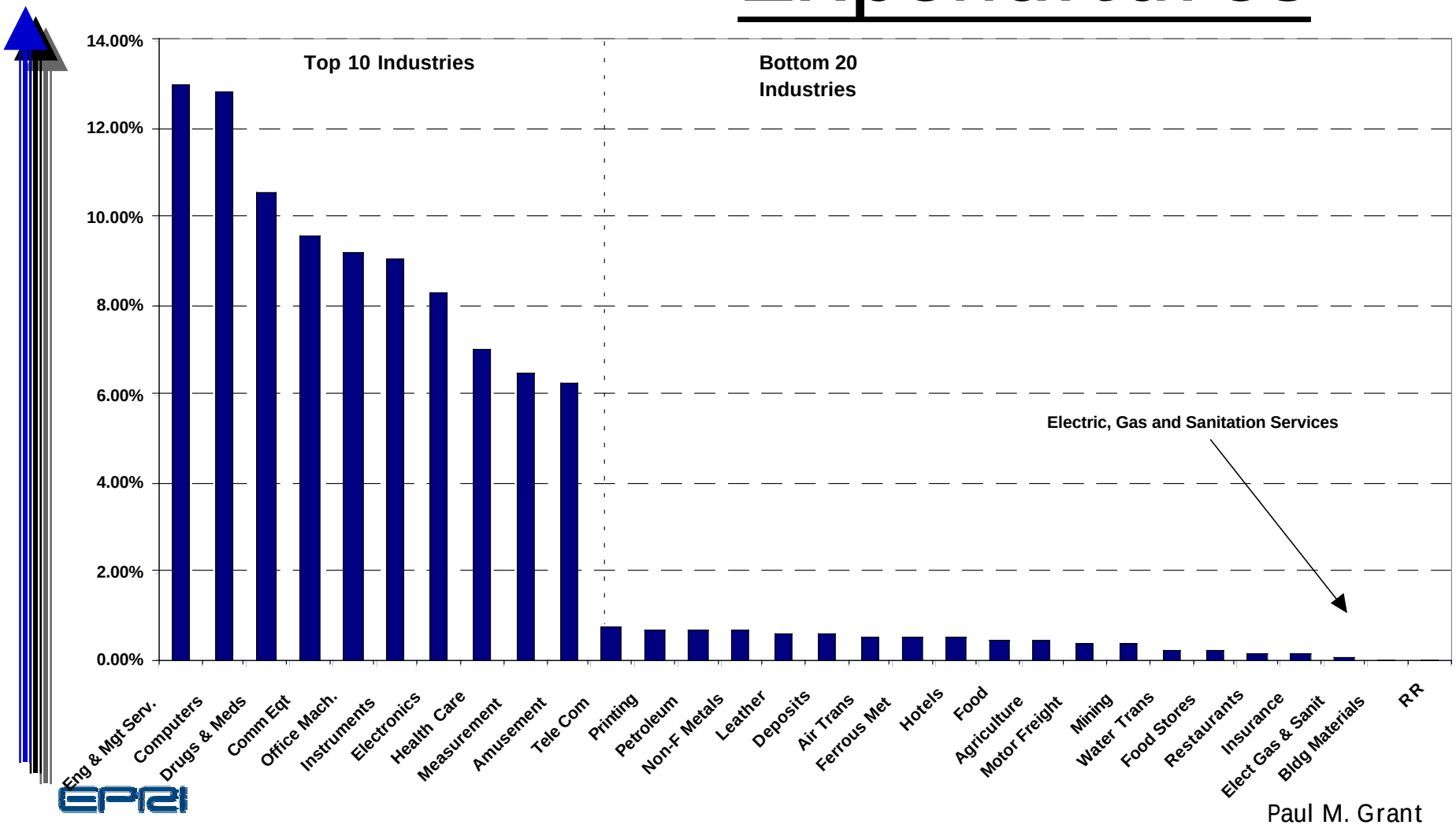

Electricity & the US Economy

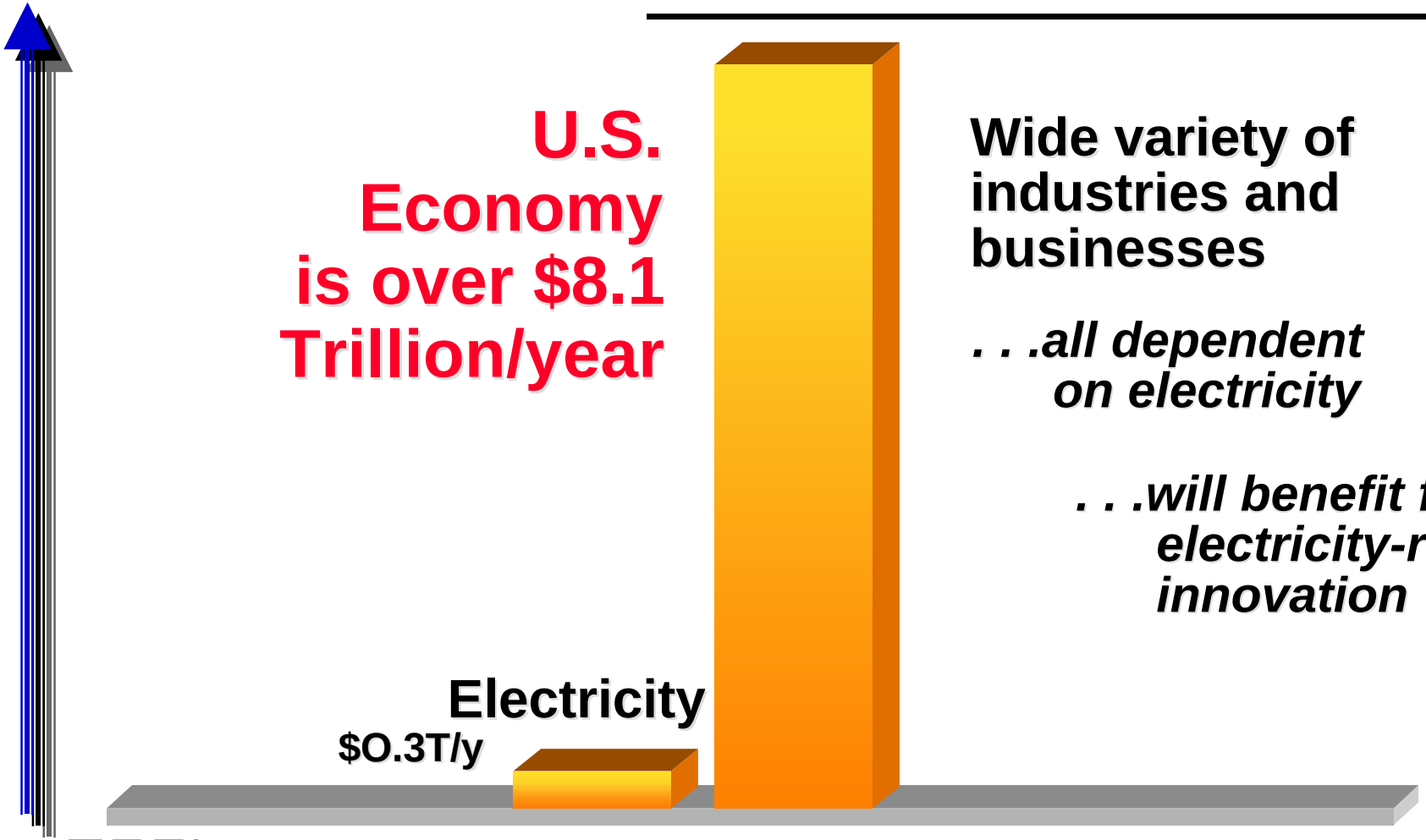

Wide variety of industries and businesses

. . .all dependent on electricity

. . .will benefit from electricity-related innovation

Grid R&D Funding

Electricity Consumption	$300 B/yr
Transmission Tariff 10%	$30 B/yr
Investment for Transmission Grid R&D 2%	$600 M/yr

Our Mission (2)

"Altogether now,…"

- Promote a National Grid Operations Policy
  - Administered by FERC under ISC clause
  - Create 7-10 Regional Grid Companies based on the "Insull" model (reg'd – monop's)
  - "Toll Booth" fees set by FERC
- Promote a National Grid Technology Policy
  - 2% Grid Tariff Revenue Set-Aside for R&D
  - Annual "technical audit" by "blue ribbon" committee established by FERC/Congress

An MI by I? Not!

U.S. Department of Energy
Superconductivity for Electric Systems
Electric Infrastucture Needs
3 August 2001 Washington, DC

Californication!

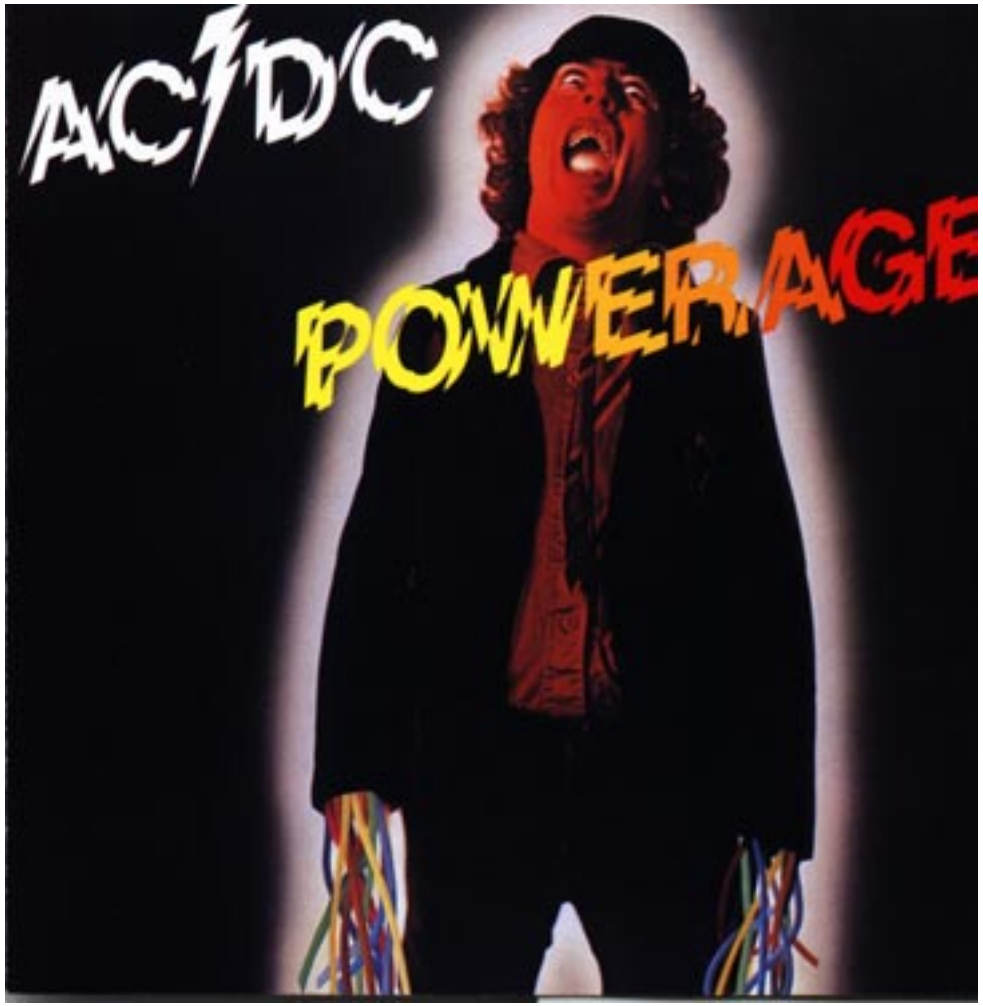

Paul M. Grant
3 August 2001