Matrix Fault Current Limiter Project

Len Kovalsky, SuperPower, Inc.

Joachim Bock, Nexans SuperConductors

Isidor Sauers, Oak Ridge National Laboratory

HTS Solutions for a New Dimension in Power

Superconductivity for Electric Systems – 2005 Annual DOE Peer Review

Matrix Fault Current Limiter Project
Overview & Utility Application

Len Kovalsky, SuperPower, Inc.

HTS Solutions for a New Dimension in Power

Superconductivity for Electric Systems – 2005 Annual DOE Peer Review

HTS Fault Current Limiters - A New Technology to Address a Growing Problem

As new sources of generation are added, utilities are faced with the threat of higher levels of fault current

- High Temperature Superconducting (HTS) Fault Current Limiters (FCLs) address the market pull to cost-effectively correct fault current over-duty problems at the transmission voltage level of 138kV and higher
- The HTS FCLs will reduce the available fault current to a lower, safer level so existing switchgear can still protect the grid

Utility market needs at the transmission level:

- Accommodate increasing fault currents due to added generation
- Avoid adverse side effects imposed by existing solutions
- Prevent breaker failures and & problems (e.g., welded contacts, bus bracing, etc.)
- Reduce “through fault” stresses on aging infrastructure
- Maintain flexibility to accommodate load growth and “open access”
- Avoid need for expensive 80kA breakers

HTS FCLs will be needed for most commercial AC HTS cable systems

Discussions with 20+ utilities have consistently validated the need!

Matrix Fault Current Limiter (MFCL) – An Alternative

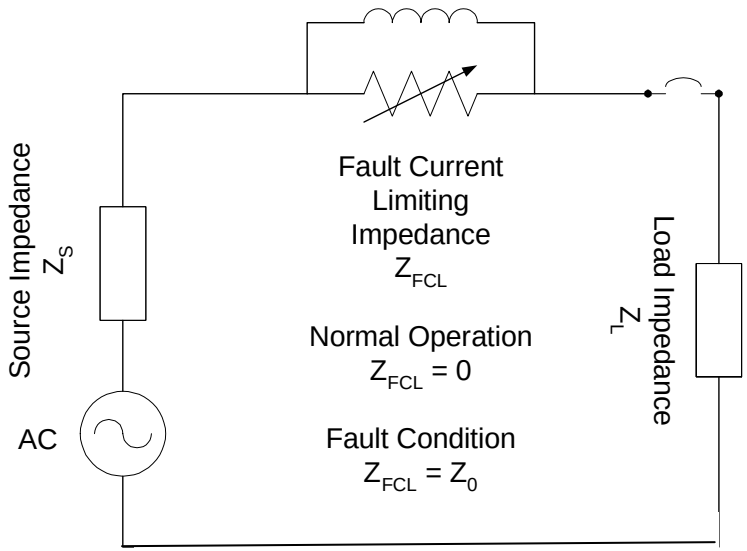

New concept with no conventional counterpart:

Passive (no active controls for insertion in system),

No Burden on system during normal operation

Modular and Scalable

Environmental benefit and no SF6

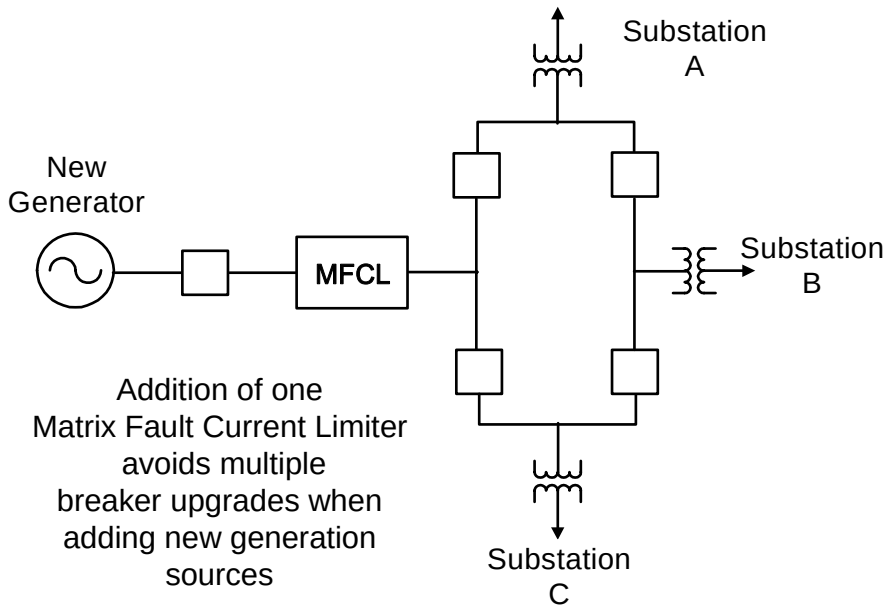

Addition of one Matrix Fault Current Limiter avoids multiple breaker upgrades when adding new generation sources

Under fault conditions critical current is exceeded and the superconductor transitions to a resistive state, introducing current limiting impedance into the grid with a parallel inductor

Project Description & Research Integration

Goal: Demo MFCL concept at transmission level voltage – 138kV

Cost – Original $12.2M project cost estimate, with $6.1M DOE and $600K EPRI support

Now estimating project cost at least $18M, based on complexities and lessons learned to date

Schedule – Project started 6/02, original completion 6/06 – Completion now no sooner then 6/07

Project Team:

- SuperPower, Inc.: Program Lead
- Nexans SuperConductors GmbH: BSCCO-2212 Melt Cast Processed (MCP) Materials
- American Electric Power (AEP) – Utility Host
- DOE National Labs – CRADA executed with ORNL (High voltage, thermal), CRADA pending with LANL (HTS element evaluation)
- Cryogenic partner in the wings, to be announced later

Technical Advisory Board (TAB):

- Evaluate and guide project in conjunction with DOE Readiness Review – Met 11/04 and 06/05
- Utility members: AEP, New York Power Authority, Southern California Edison, Con Edison, Entergy
- Academia: Rensselaer Polytechnic Institute (RPI)
- Funding sponsors: DOE and EPRI

Research Integration (cont'd.)

National Electrical Energy Testing, Research And Applications Center (NEETRAC)

- Periodic reviews with 5 utilities with an interest in the project: Florida Power and Light, Exelon, Southern Company, Baltimore Gas and Electric, Entergy
- NEETRAC project manager sits on TAB

Use existing specialized facilities:

- KEMA Power Test, Chalfont, PA, for short circuit testing in US
- International Institute for Product Safety, Bonn Germany, for short circuit testing in Europe
- Waukesha Electric for Impulse testing up to 900kV

High Voltage Working Group – RPI, AEP and ORNL

2 MFCL papers presented at ASC and published in IEEE Transactions

Total of 3 US patents granted on MFCL technology

- Implementation is moving away from the original concept, which does not scale well to high voltage due to complexity
- Most recently using more simple single-coil self triggering concept – patent applied for by Nexans

Milestone Driven Program

Major Milestone	Objectives	Completion Date
Concept Feasibility & Application Studies	• Complete Conceptual Design • Study application requirements and perform power system studies	Completed June 2003
Proof-of-Concept Demonstration	• Scaled hardware non-grid demonstration of matrix concept	Completed July 2004
Alpha Prototype	• Focus: Scale up for non-grid demonstration at high voltage • Rating: 138kV, single phase, AEP application requirements	Concept June 2005, Prototype **ON HOLD**
Beta Prototype	• Focus: In-grid demonstration for specific utility application • Rating: 138kV, three phase, AEP Sporn Application	**ON HOLD**

Fabrication of full scale prototypes on hold pending further developments in focus areas:
1. High Voltage
&
2. HTS elements

AEP has requested Beta prototype to be in service by late CY2006 or at latest early CY2007 – A stretch given current development status

Proof-of-Concept Achieved in 2004

Rapid element quench - First peak current limiting to reduce stress on utility equipment & Significant limiting at time breaker opens at 3rd cycle – Reduces fault current to safe levels so existing protection equipment can isolate fault

This work ranked 2 of 9 in 2004 Peer Review – But a baby step on the journey to a working Beta Prototype

Single-Phase Unit for Non-grid R&D Testing

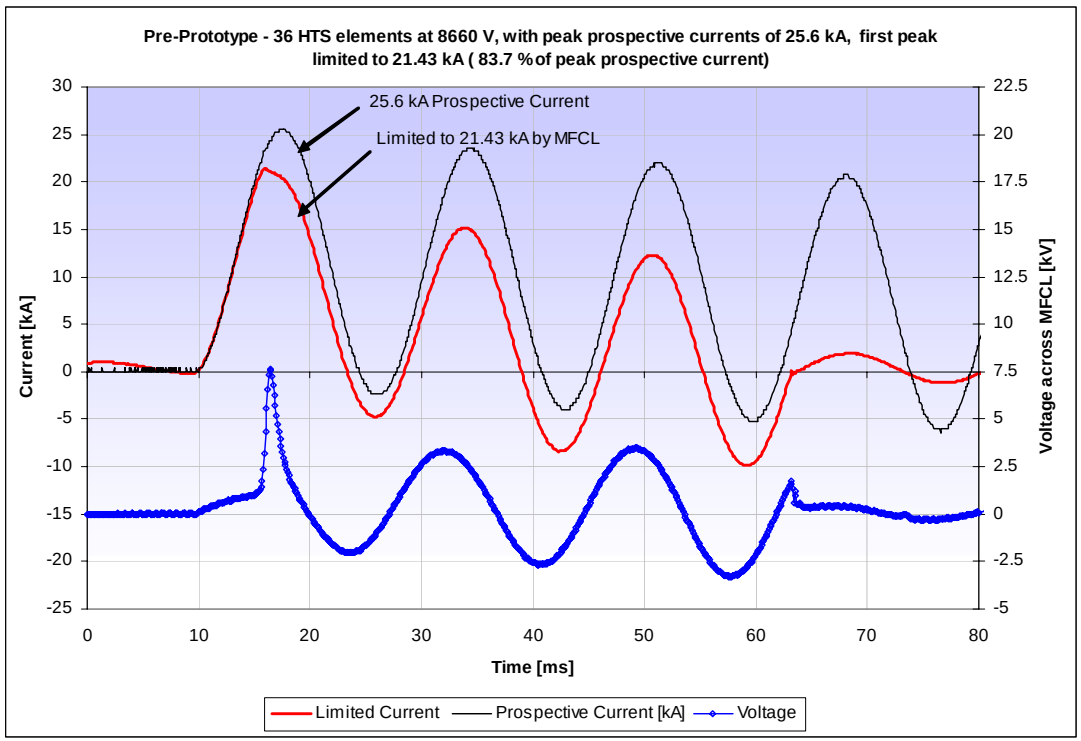

Alpha Prototype Development - Main Components

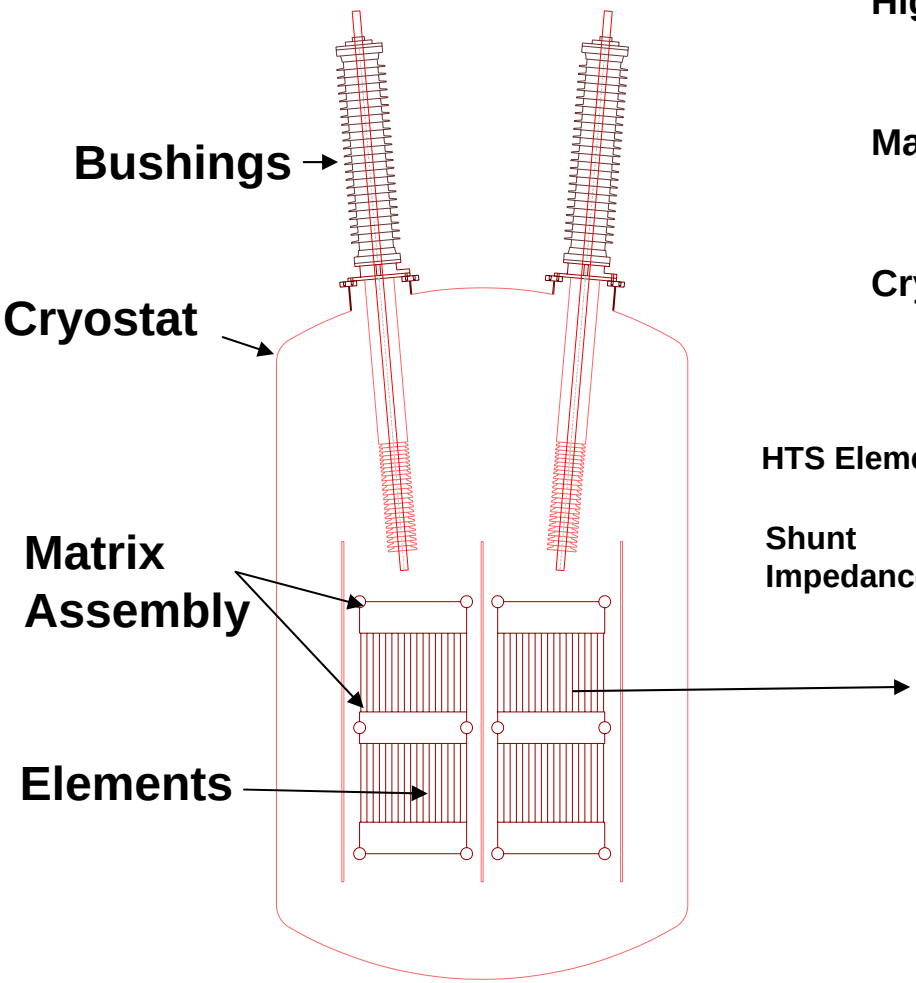

Single Phase of Alpha

High Voltage Insulation System – 1. Bushings, 2. Cryostat insulation system, 3. Matrix internal insulation

Matrix Assembly – 1. HTS Elements, 2. Connections of HTS elements and current limiting coils

Cryostat System – 1. Vessels to provide stable pressurized sub-cooled environment, 2. Cryogens and cryo-coolers

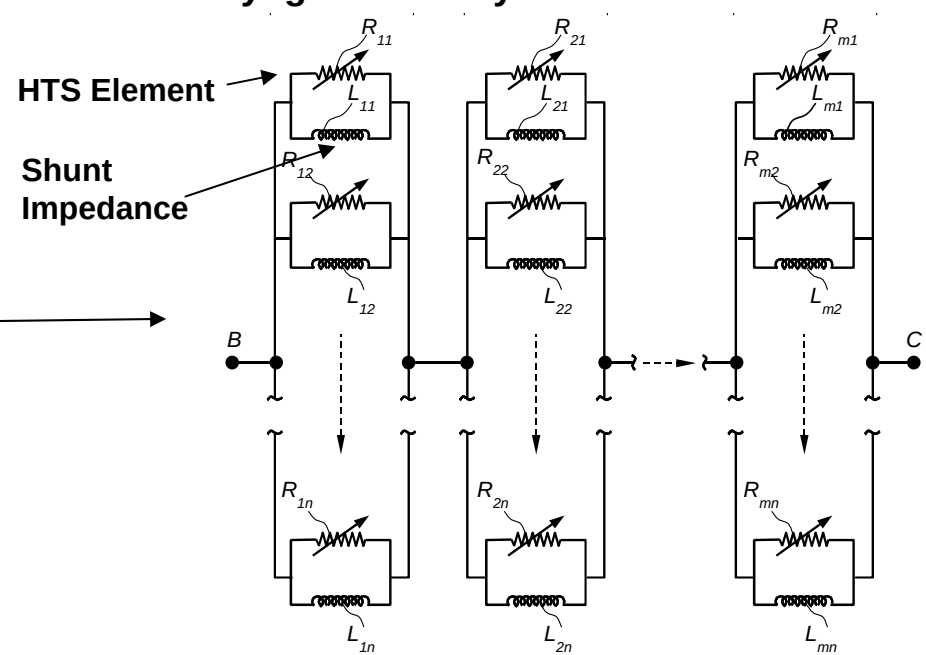

Simplified Matrix Assembly Schematic

Alpha System Design Considerations

Objective is to design the Alpha as "one-phase of Beta" with AEP host utility application driving all of the requirements

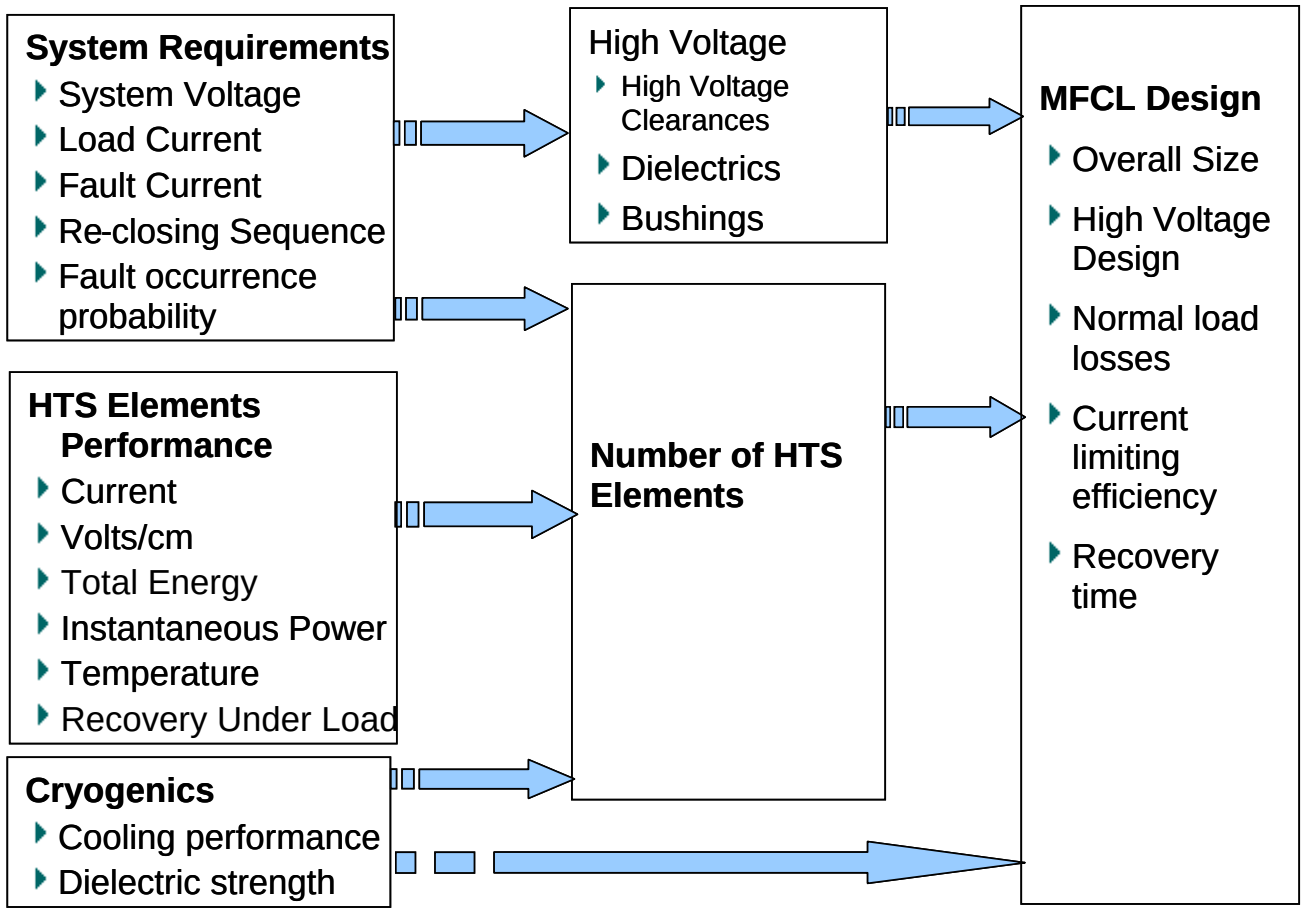

Alpha Prototype - High Risk Design Challenges

High Voltage:

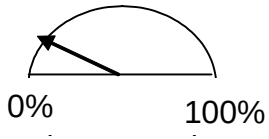

- Meet high voltage qualification requirements specified for this device in conjunction with AEP and other utilities– Lighting and switching BIL, AC withstand, Partial Discharge
- Breaking new ground in high voltage in cryogenics at transmission level - Data on lifetime and aging of dielectric materials in cryogenic environment still in early stages at this voltage level – All generic issues for most HTS applications at High Voltage

HTS Elements:

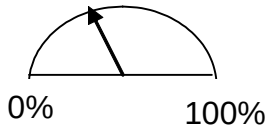

- Number of elements determines device size (along with high voltage), steady state losses (connections) and rating of device cryogenic system – Keep number per phase to a manageable level, i.e., < 500max
- Must develop longer elements with high individual energy level to minimize total number of parts
- Very high reliability required - Loss of elements has negative impact on heat load and introduces debris that could compromise high voltage
- Need unique short circuit test capability to qualify parts
- Return to superconducting state while carrying load current - Recovery Under Load (RUL)

Alpha Prototype – Design Challenges (cont'd.)

Medium Risk - Matrix Assembly:

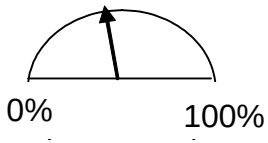

- Efficiently interconnect and trigger 100's of elements to provide the current limiting requirements for AEP application
- Tradeoffs in shunt impedance value:
  - Low enough to get current out of HTS quickly to avoid heating and enhance RUL
  - High enough to provide adequate impedance to limit short circuit
- Lighting impulse voltage distribution across matrix in current limiting state

Low Risk - Cryogenic System:

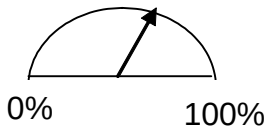

- Establish efficient way to provide a stable pressurized sub-cooled environment - Cryogenic partner brings extensive experience
- High voltage design impacts cryogenic system – some tradeoffs may be needed

Other: Keep footprint of device comparable to that of 100MVA 138kV xformer – about 400sq. Ft. - Staying within that size constraint will be a challenge, due the high energy that dumped into device when a fault occurs

Requirements - AEP Sporn is the Location for MFCL Beta

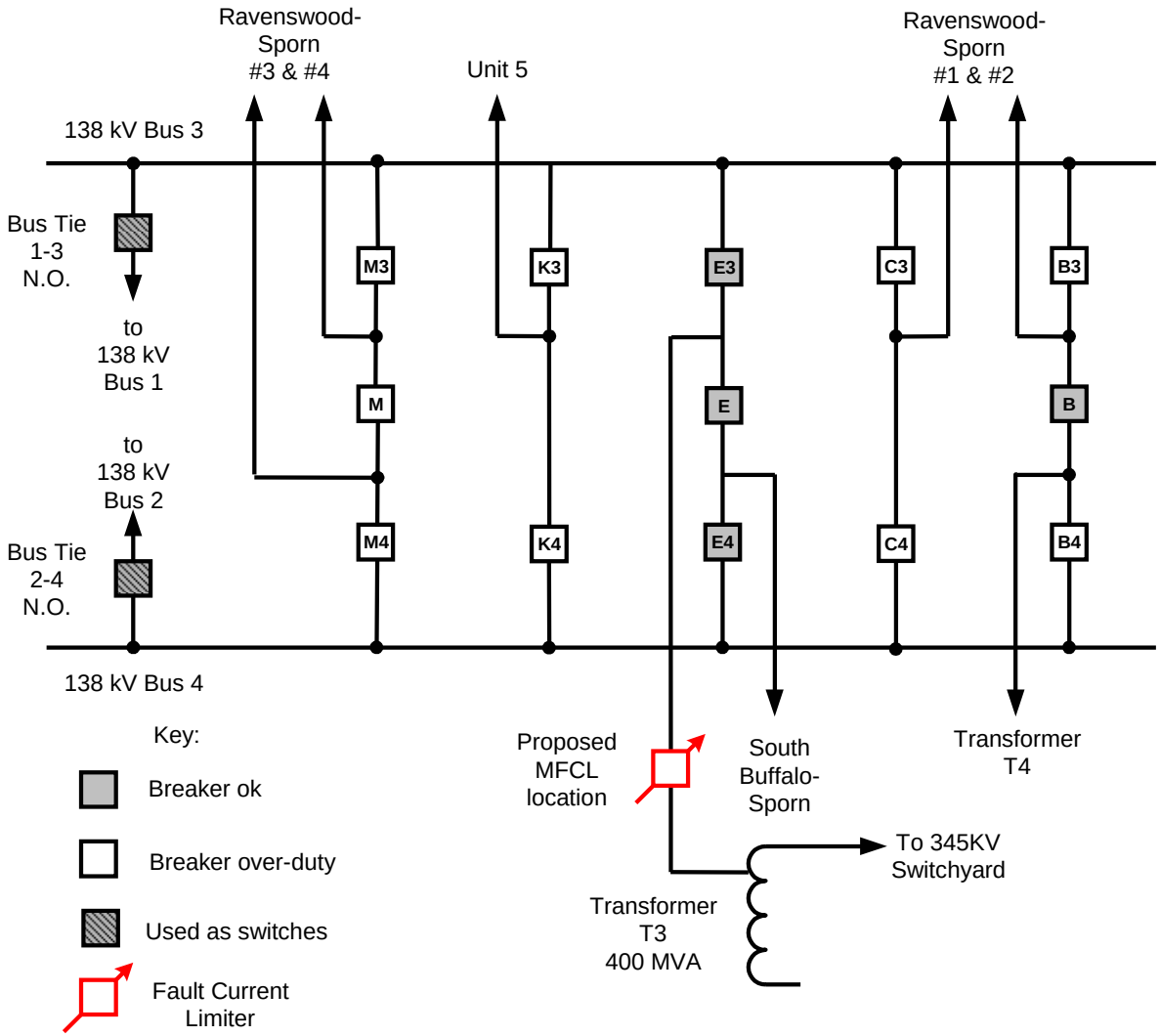

Tie between 345kV switchyard and 138kV switchyard with autotransformer T3

Tie is beneficial during normal operation, but contributes additional 13kA to 138kV bus during faults

Puts 9 breakers (NOT shaded in gray) in an over-duty situation

Problem presently solved with sequential breaker scheme

E and E3 tripped first to remove contribution of T3 to the fault

Alternative solution is to keep T3 connected during fault, but limit current with MFCL

MFCL response can be initially evaluated by leaving sequential trip scheme in place

Steady State Current Requirement – 400Arms

1. Normal Operation: Unit #5 Generator in service, T3 and T4 each carry light load

- 400Arms @ MFCL – comparatively low
- MFCL in service to reduce fault current

2. Contingency #1: Unit #5 Generator out of service, then T3 and T4 share load

- 1250Arms @ MFCL
- MFCL bypassed

3. Contingency #2: Unit #5 Generator is down and either T3 or T4 fails, then the remaining xformer will see all of the load

- Up to 2300Arms (if T4 fails) @ MFCL
- MFCL bypassed

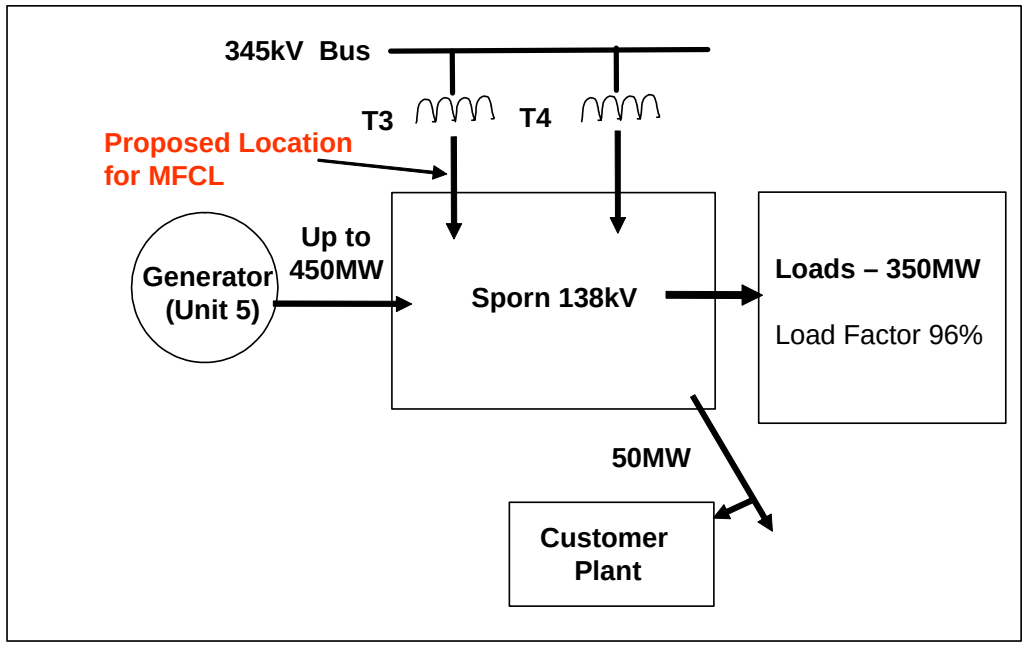

Breakers OK in Contingencies #1 and #2 due to fewer sources of fault current

MFCL bypassed in Cont. #1 and #2 due to:

- Concern of meeting RUL at > = 1000A level
- High steady state losses in cryogenic system

Fault Currents Up to 26kA rms Symmetrical

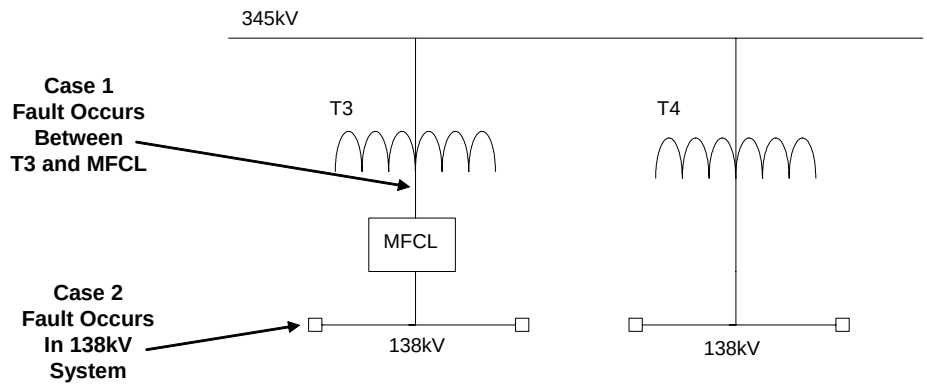

- **Case 1 (Close-in Fault):**
  - MFCL sees 26kArms symmetric prospective fault current (70kA first peak asymmetric) for 5 cycles (16 cycles with stuck breaker)
  - E/E3 Breakers open and lock-out
  - MFCL recovers to superconducting state without carrying load current
- **Case 2 (Fault in 138kV system):**
  - MFCL typically sees 13.8kArams prospective for 5 cycles
  - Re-close scheme employed – up to 4 re-close with possibility of stuck breaker
  - MFCL must recover to superconducting while carrying load current – Recovery Under Load (RUL)

Current Limiting, Total Energy, & RUL Requirements

Fault Location	Nominal Load Current	Prospective Fault Current at MFCL	Current Limiting Requirement to Relieve Breaker	Max Fault Duration (Drives total energy)	RUL
Case 1 – In between MFCL and T3	400Arms (Normal Mode)	26kArms	Not specified – Current will be limited as a result of Case 2	Up to 16 cycles with stuck breaker	No
Case 2 – In 138kV System	400Arms (Normal Mode)	13.8kArms	Reduce by 50% - 7kArms	Effective 26 cycles with stuck breaker	Yes – 400Arms

Highest energy dumped into MFCL for this scenario – Drives the number of elements!

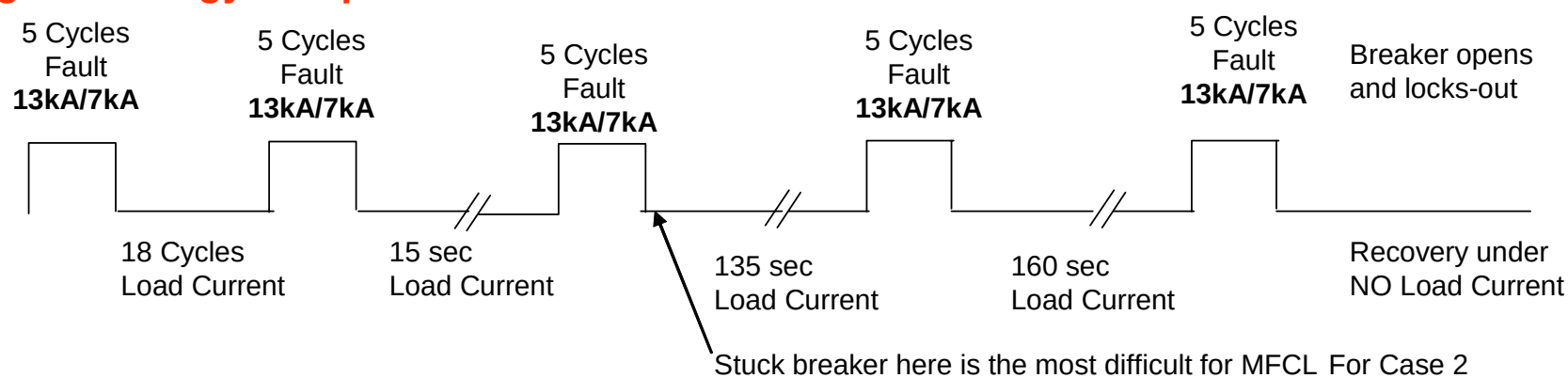

Breaker Re-close Scheme for Case 2

High Voltage Test Requirements for Alpha Established

Tests based on typical 138kV requirements for Breakers, Transformers and Current Limiting Reactors

Based on input from AEP and NEETRAC Members

Tests to be Conducted	Proposed MFCL Requirement
60Hz Withstand	Based on ANSI Breaker C37.06 Table 4
Partial Discharge	Based on ANSI Transformer C57.12.00 Table 6
BIL Lightning Impulse	Based on ANSI Reactor C57.16 Table 5
Chopped Wave	Based on ANSI Transformer C57.12.00 Table 6
Switching Impulse	Based on ANSI Transformer C57.12.00 Table 6

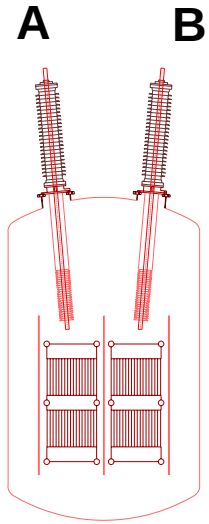

Configurations for impulse testing:

- Impulse terminal A wrt to ground, with B open

- Impulse terminal B wrt to ground with A open

- Tie A & B together and impulse wrt to ground

Matrix Fault Current Limiter Project
High Voltage Development

Isidor Sauers, Oak Ridge National Laboratory

HTS Solutions for a New Dimension in Power

Superconductivity for Electric Systems – 2005 Annual DOE Peer Review

High Voltage Development - Objectives

Build confidence in designing a 138 kV, 650 kV BIL transmission line Fault Current Limiter per AEP requirements

- Improve understanding of the dielectric performance of Insulation materials in a cryogenics environment
- Published information is scarce at transmission line voltage levels
- Develop experimental test setups and test to voltages higher than device ratings
- Develop Finite Element Analysis (FEA) simulation tools to computed electric field distribution
- Develop transfer function between FEA and test results
- Develop design tools based on the experimentally verified transfer functions

Identify and Study the Main Insulation Areas

- Bushings/Leads
- Matrix Assembly – Internal Insulation and Impulse Voltage Distribution
- Bushings/Leads and Matrix Assembly to Cryostat – External Insulation

High Voltage Development – Main Dielectrics

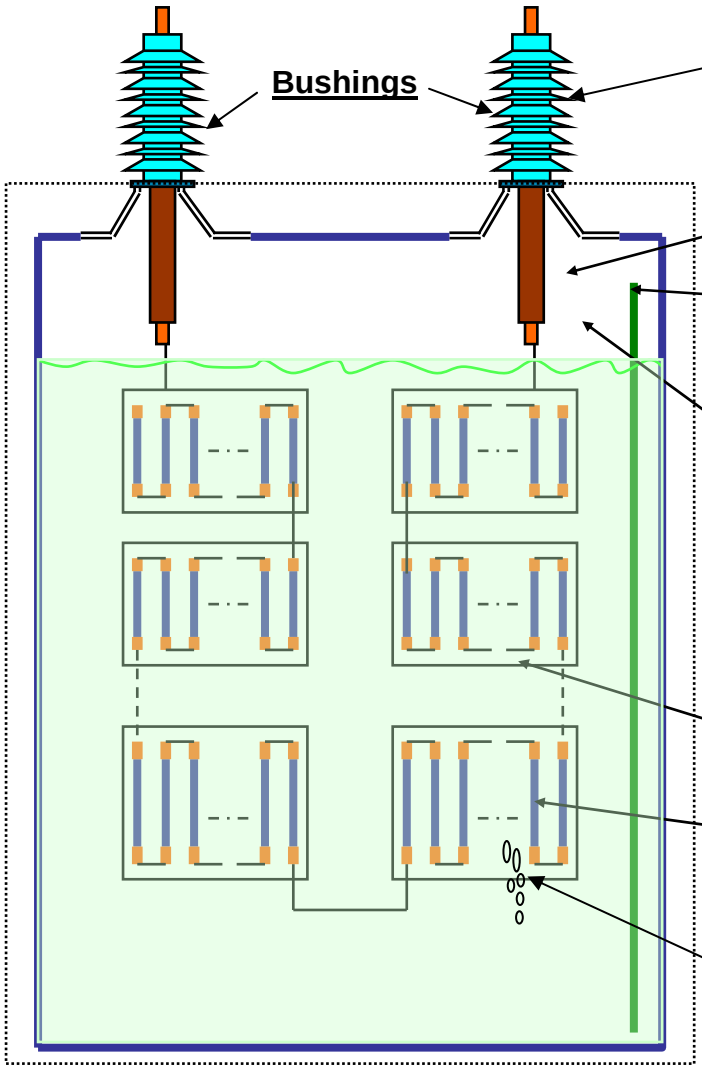

1. **Bushings**
   - Custom bushing using modified conventional bushings
   - Special bushing based on HTS Cable terminations
2. **Gas Nitrogen (GN2)**
   - Gas breakdown mechanisms
3. **Gas/Solid Composite**
   - Partial breakdown of gas dielectric
   - Puncture strength of solid insulation and
   - Surface Flashover
4. **Gas/Solid/Liquid (GN2/Solid/LN2) Composite**
   - Partial breakdown of GN2 and LN2
   - Field enhancement and Partitioning
   - Puncture strength of solid insulation and
   - Surface Flashover
5. **Liquid Nitrogen (LN2)**
   - LN2 breakdown strength
6. **Liquid/Solid Composite**
   - LN2 partial breakdown and Partial Discharge (PD)
   - Solid insulation puncture and Surface flashover
7. **Bubble effects**

High Voltage Development – Predictive Design Tools

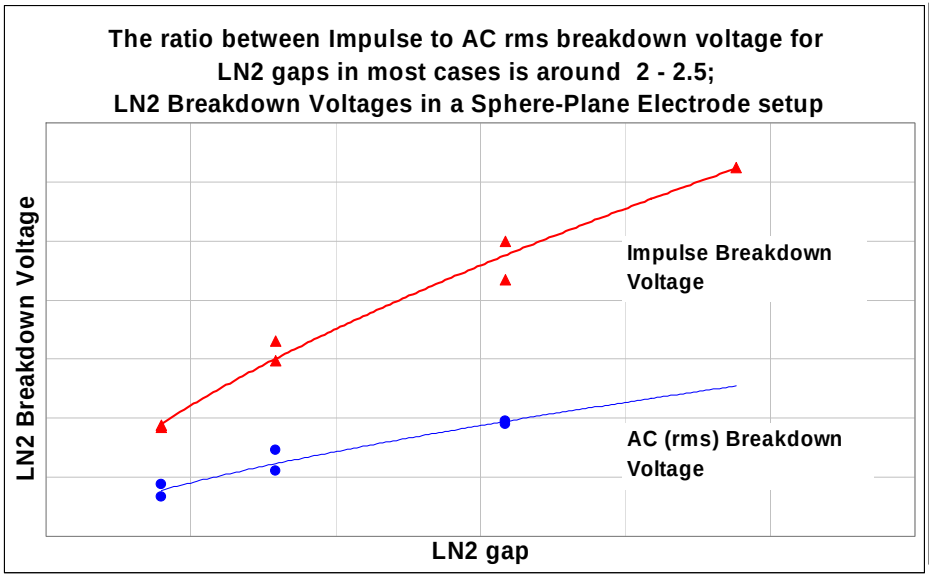

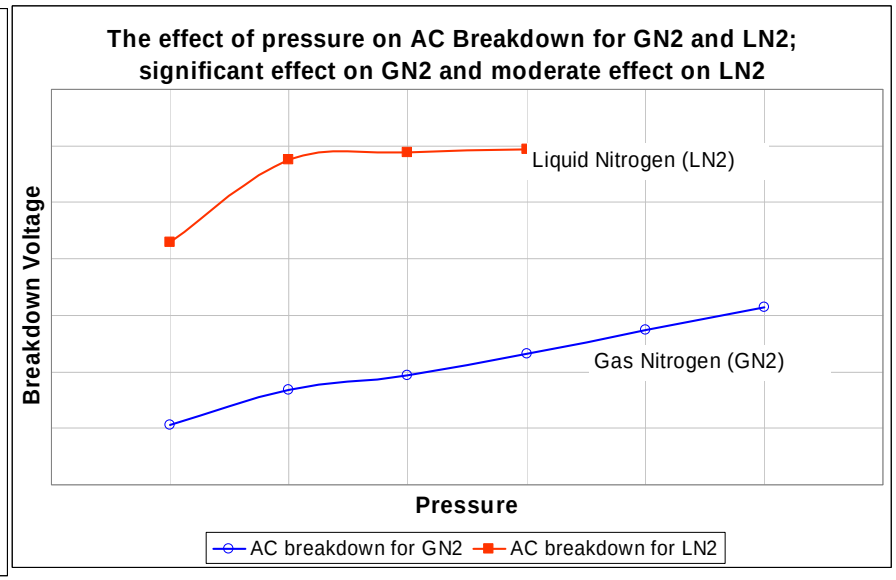

Transfer Function – Predictive Design Tool

- Based on experimental and computed (FEA) results
- Experimental test rigs were tested up to 200 kV AC rms and 900 kV impulse - Defined the mean Breakdown Voltage (V_{BD}) or Mean Breakdown Field (E_{BD})
- Main Parameters considered for the transfer function are; g = Dielectric gap; η = Utilization factor = Eav/Emax; v = Volume of LN2 under stress; P = Pressure, T = Temperature and Bubble effects

Weibull Probability Distribution Function Used to Predict Failures

Experimental data and Weibull probability distribution with two parameters, α and β, used

Predicts the probability of the dielectric failure at a given applied voltage or Field

Currently consider a 0.01 % (1 in 10,000) probability of failure, Design to around 50% of mean breakdown voltage

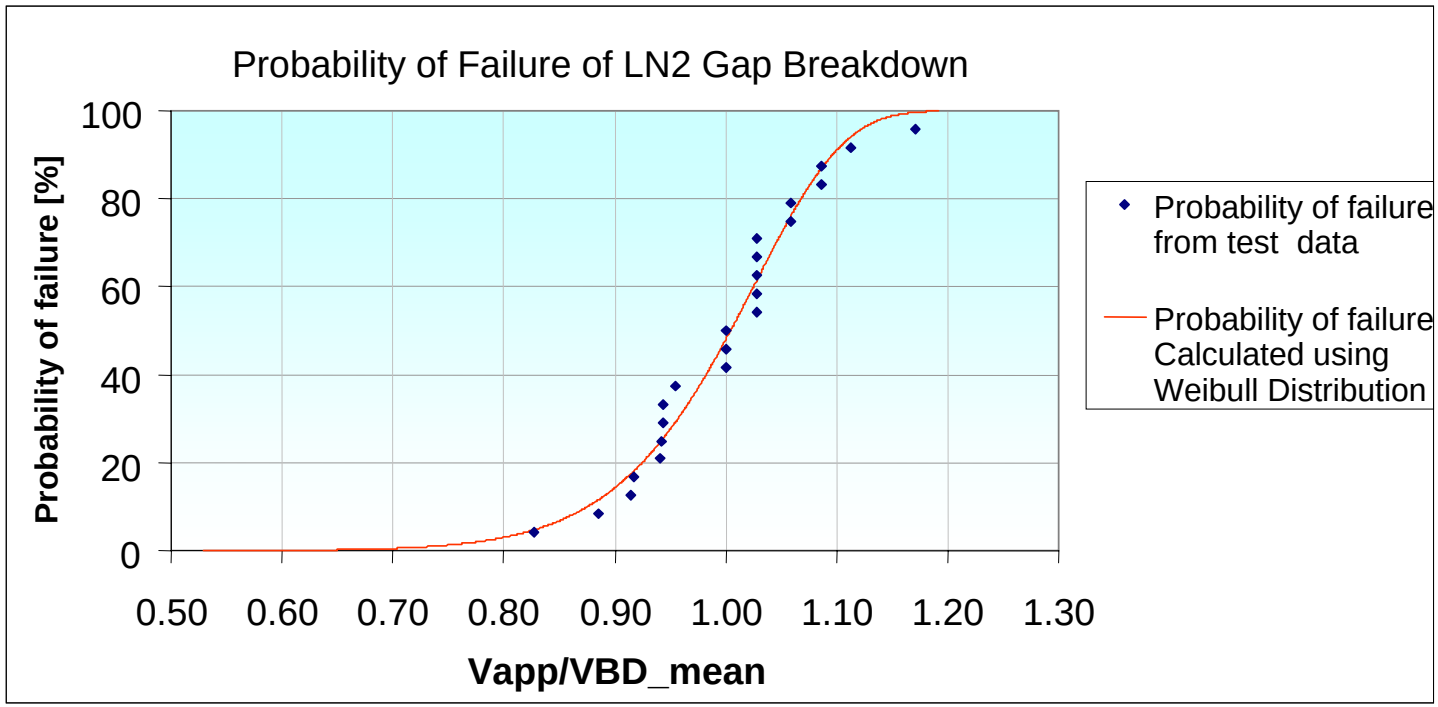

$$P(f) = 1 - e^{-(V/\beta)^{\alpha}}$$

α and β are the two Weibull parameters

High Voltage Development – Test Configurations

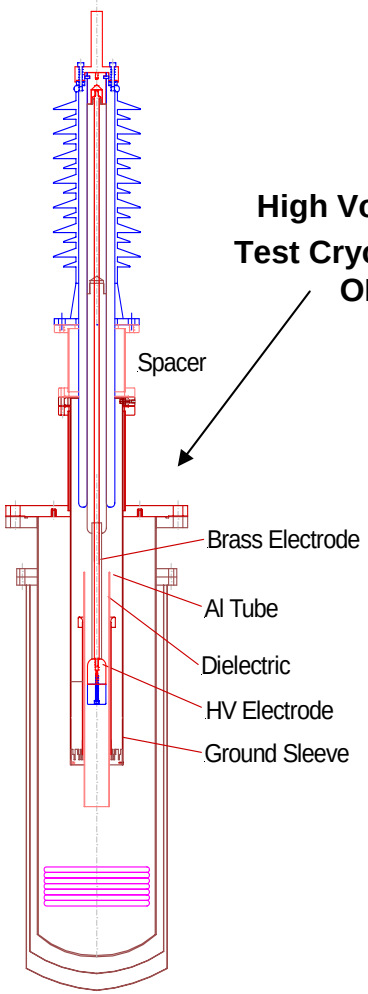

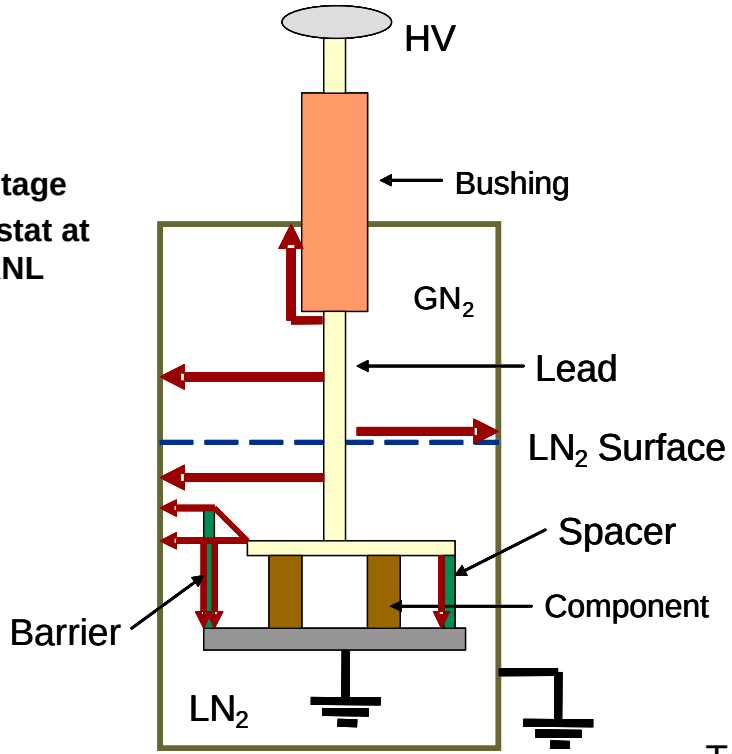

Breakdown seeks the weakest path!

High Voltage Test Rig at ORNL

Test rig to test the dielectric strength of LN2 gaps, Flashover and G10 puncture on simplified geometries and MFCL mockups

Studied dielectric performance of GN2, LN2 and Solid Insulation (G10) under various electrode configurations, bubble activities, pressure & temperature

High Voltage Development – Bushings

Bushing designs

- Conventional bushings tested for cryogenic applications
- Focus on insulation integrity - must not crack when cold
- Will be exposed to cold N2 gas or immersed in LN2

Two commercial bushings tested

- 38 kV AC (200 kV BIL) and 52 kV AC (250 kV BIL)
- Two different manufacturers
- PD tests done before and after cooling and immersing – Meets IEEE standards on PD
- Similar type bushings considered for scaling up to 138 kV class

Kasegn Tekletsadik of SuperPower and Alvin Ellis of ORNL install bushing for test

Trends Emerging – Reduce E Field Rather Than Increasing Gap

Surface Flashover Test Setup

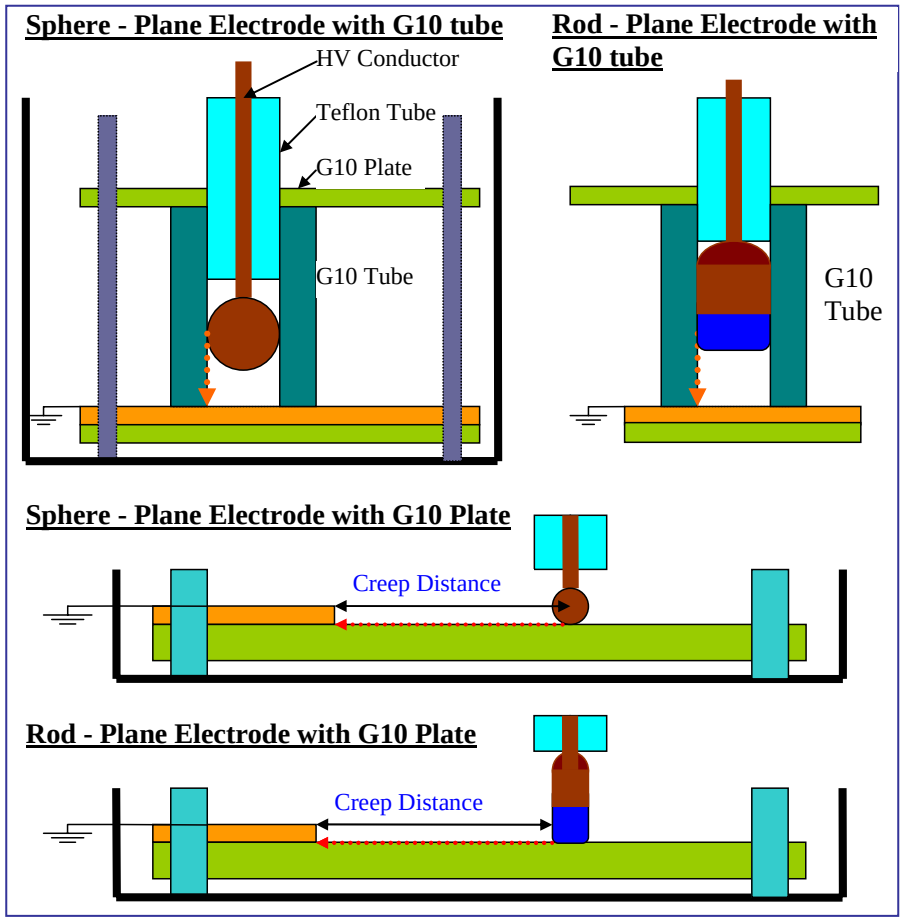

Flashover in LN2/G10 gaps

- Studied the effects of electrode/Insulator interface on surface flashover
- Developed transfer functions between flashover voltages and electric field and electrode/insulator geometries
- *Surface Flashover Voltages,* $V_{FO} = f(g, \eta, v, P, T, \text{Bubble effects})$ fit well with derived transfer functions
- Increasing gap may not buy you much in breakdown voltage! Rely on reducing/minimizing electric field

Typical Surface Flashover marks

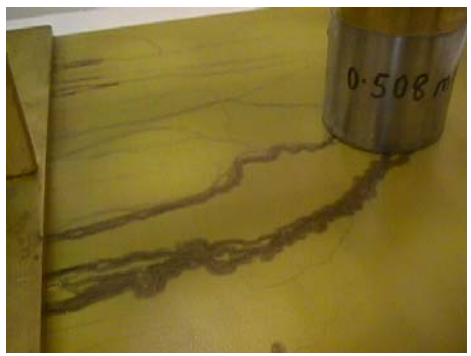

Verification of Design Tools for Impulse Test

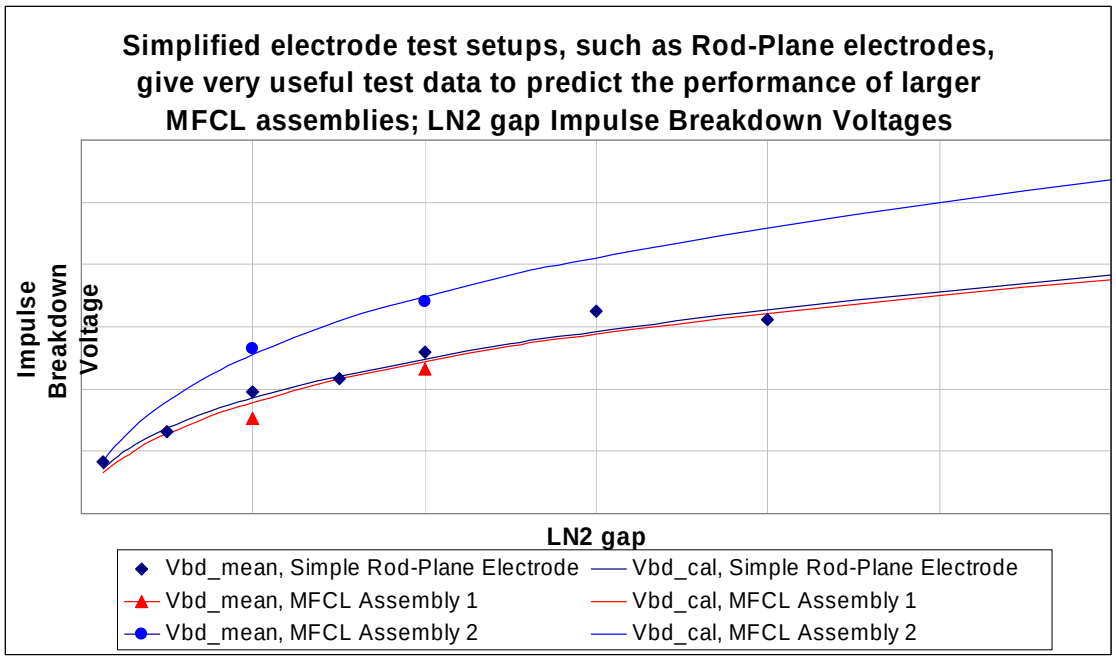

MFCL Mockup – FEA for generating transfer function (HV design tools)

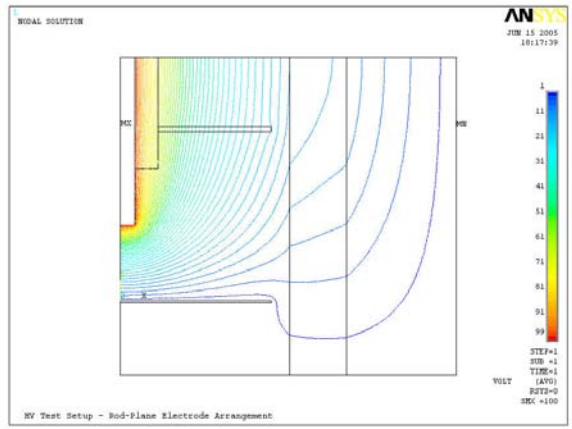

Rod-Plane Electrode

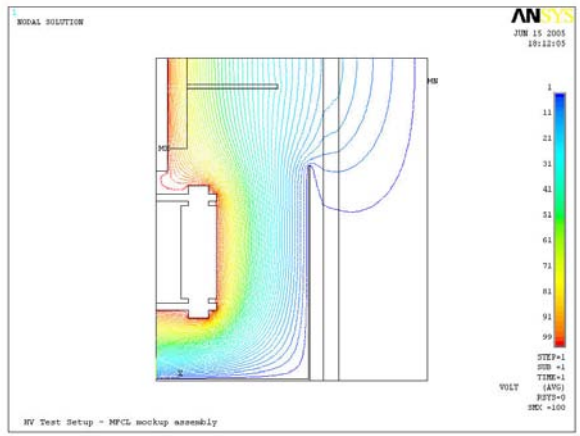

Tested 3 electrode configurations with both Negative and Positive Impulse

Developed predictive design tools based on transfer functions between test and FEA results

High Voltage FY05 Summary

Bushings:

- Qualified insulating materials used in two commercial bushings in a cryogenic environment – Parts will still require customization for MFCL application
- Investigated bushing developed for HTS cable termination – But also requires customization for MFCL - Will continue investigations of each option until a choice is clear

Data collected to characterize dielectrics and develop transfer functions:

- Based on experimental and computed (FEA) results - Tested up to 200kV AC and 900kV impulse
- Weibull probability distribution function used to predict the probability of failure

Trends emerging:

- HV design approach will be to reduce/minimize the electric field, and less reliance on increasing gaps
- No show stoppers or major issues have emerged, but significant additional testing and verification needed that will require additional time
- Future work will consider including partition of LN2 gap by solid insulation

Matrix Fault Current Limiter Project
HTS Element Development

Joachim Bock, Nexans SuperConductors

HTS Solutions for a New Dimension in Power

Superconductivity for Electric Systems – 2005 Annual DOE Peer Review

HTS Elements – Introduction

Can we deliver up to 1000 elements (for the Alpha-prototype) which would sustain ≥ 100 faults at the designed energy level?

Required actions:

- **Ramp up the manufacturing process for HTS tubes and FCL elements**
- **Install a screening procedure allowing high power testing**
- **Qualifying element assemblies for a design energy of 5 kJ/ element**

HTS Elements – Improvements Since Pre-prototype (1)

HTS tube manufacturing upscale and optimization

- ⇨ Up-scaling the melt casting process: 25 ⇒ 100 tubes per week
- ⇨ Improved homogeneity per tube
- ⇨ Better batch homogeneity (now also for larger quantities)

	Elements for	Average Ic	Average uniformity
April 2004	Pre-prototype	1437 A	12 %
Jan. 2005	Alpha development	1535 A	10 %
May 2005	Alpha development	1478 A	8 %
July 2005	Alpha development	1618 A	3 %

⇨ Manufacturing and quality control successfully established

HTS Elements – Improvements Since Pre-prototype (2)

Up-scaling powder handling

- ⇨ Qualification of new raw material suppliers
- ⇨ Increase of batch size from 13 kg to 85 kg

Up-scaling annealing process

- ⇨ 64 tubes/ batch

- ⇨ New 3-zone furnace

Up-scaling machining process

- ⇨ New workshop with dedicated equipment

Design of Elements and Connection to Assembly

Stabilization

- Within the element (avoiding thermal insulation)

Connector

- Elements with flexible connection to assembly

New joint elements

- New 40 cm elements based on 20 cm joint tubes
- Saving of a connector and space
- Reduction of I^2R losses

Longer BSCCO tubes up to 350 mm under development!

New High Power Short Circuit Test Stand Set Up at NSC

- high peak power (6 MW instead of 1.5 MW per element)
- will allow high power testing on a day by day basis to get statistical data

Up to 100 kA peak

6 kV circuit-breaker

830 V/ 25 kA/ 1-phase = 16,6 MVA
830 V/ 20 kA/ 3-phase = 29 MVA
240 V/ 50 kA/ 1-phase = 12 MVA

6 kV connection

July 2005

Evaluation of Material Parameters

Mechanical tests at BSCCO ceramic tubes

Instron testing device

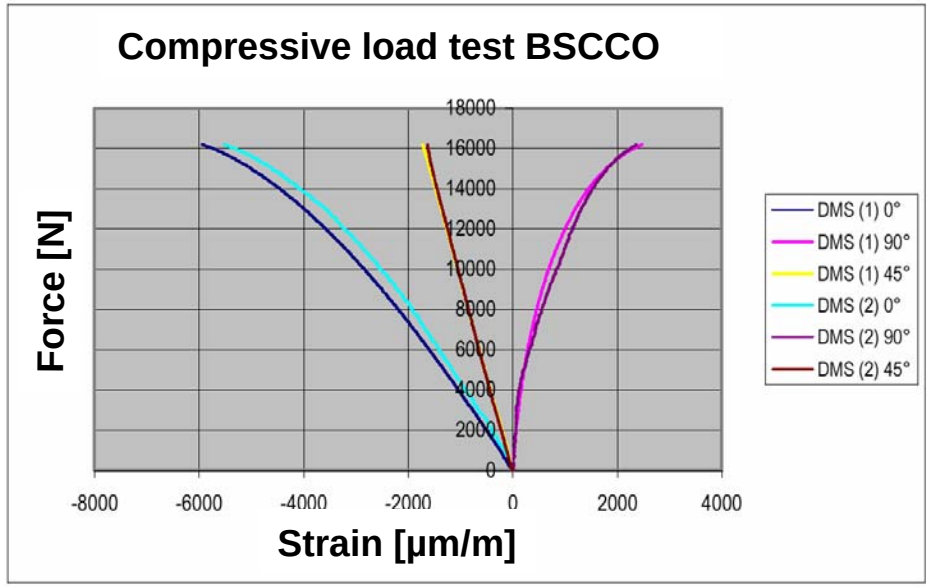

Force strain diagram

Compressive load test

- Youngs modulus E_{BSCCO} = 35 Gpa
- Modulus in torsion = 14 GPa
- Poisson ratio υ_{BSCCO} = 0,2
- Achievable maximum force up to fraction $F_{max,BSCCO}$ = 17 kN
- Percentage elongation after fracture $\varepsilon_{F,BSSCO}$ = 0,55%

Magnetic Trigger Concept

- ⇨ Influence of magnetic field confirmed
- ⇨ a low loss trigger concept validated (concept clarification)
- ⇨ single coil parallel concept selected

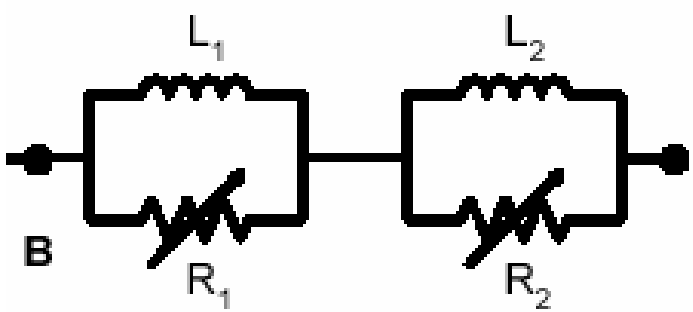

Self-triggered concept

.....

HTS tube parallel connected (electrically and physically) to trigger/ shunt coil

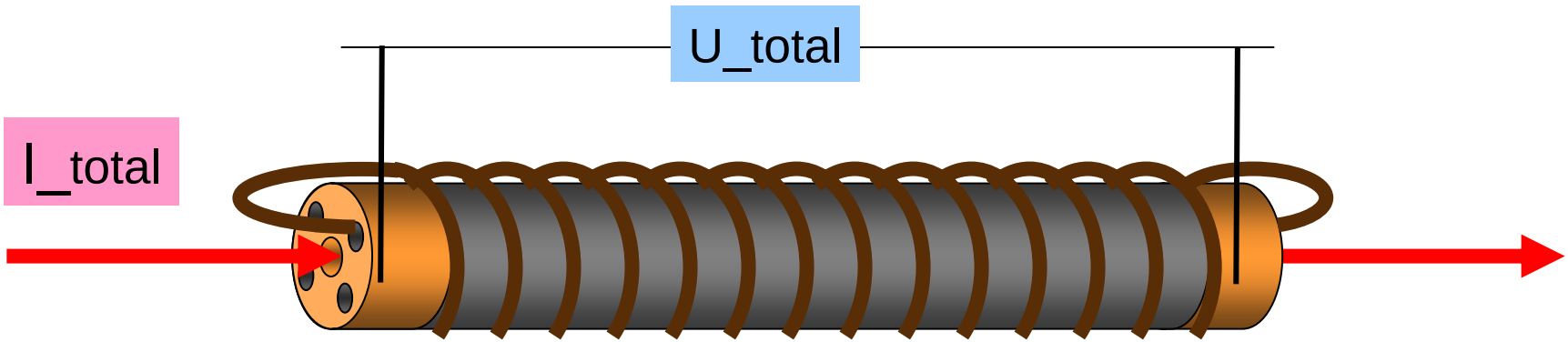

Single Element Testing Up to High Energies

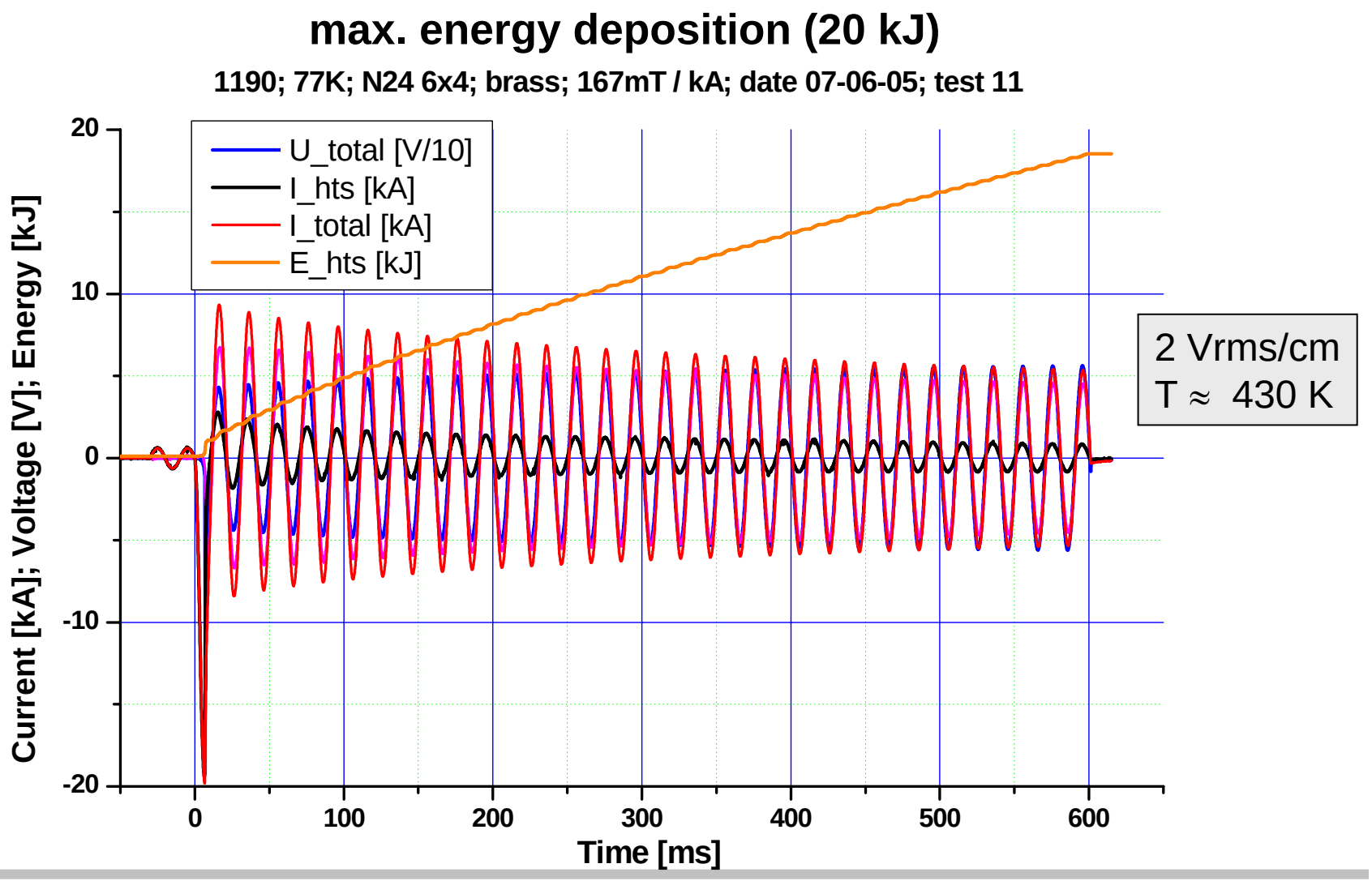

Element Testing – 5 in series, repetitive shots

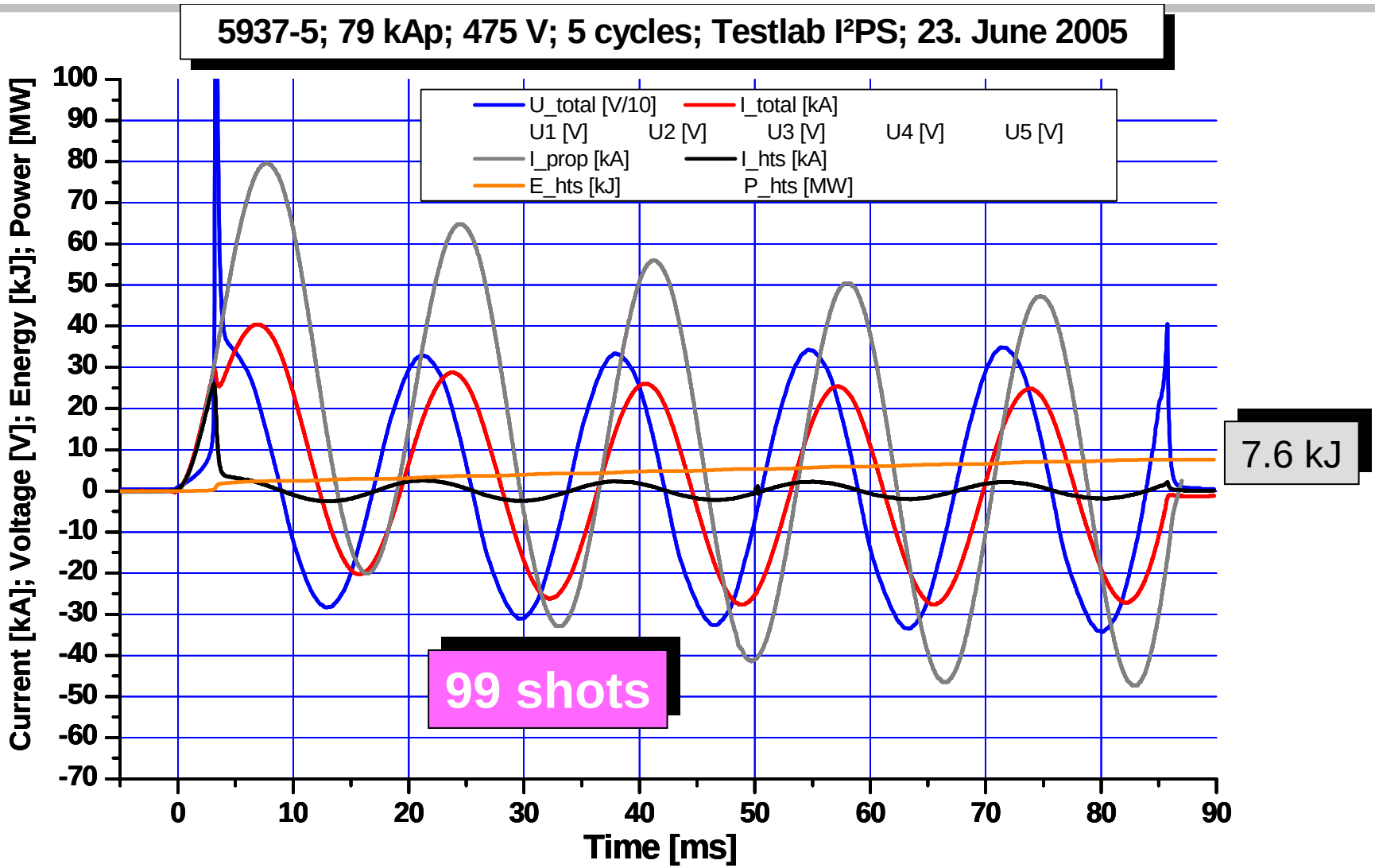

Element Testing, 5 in series – Requirements of First Cycle

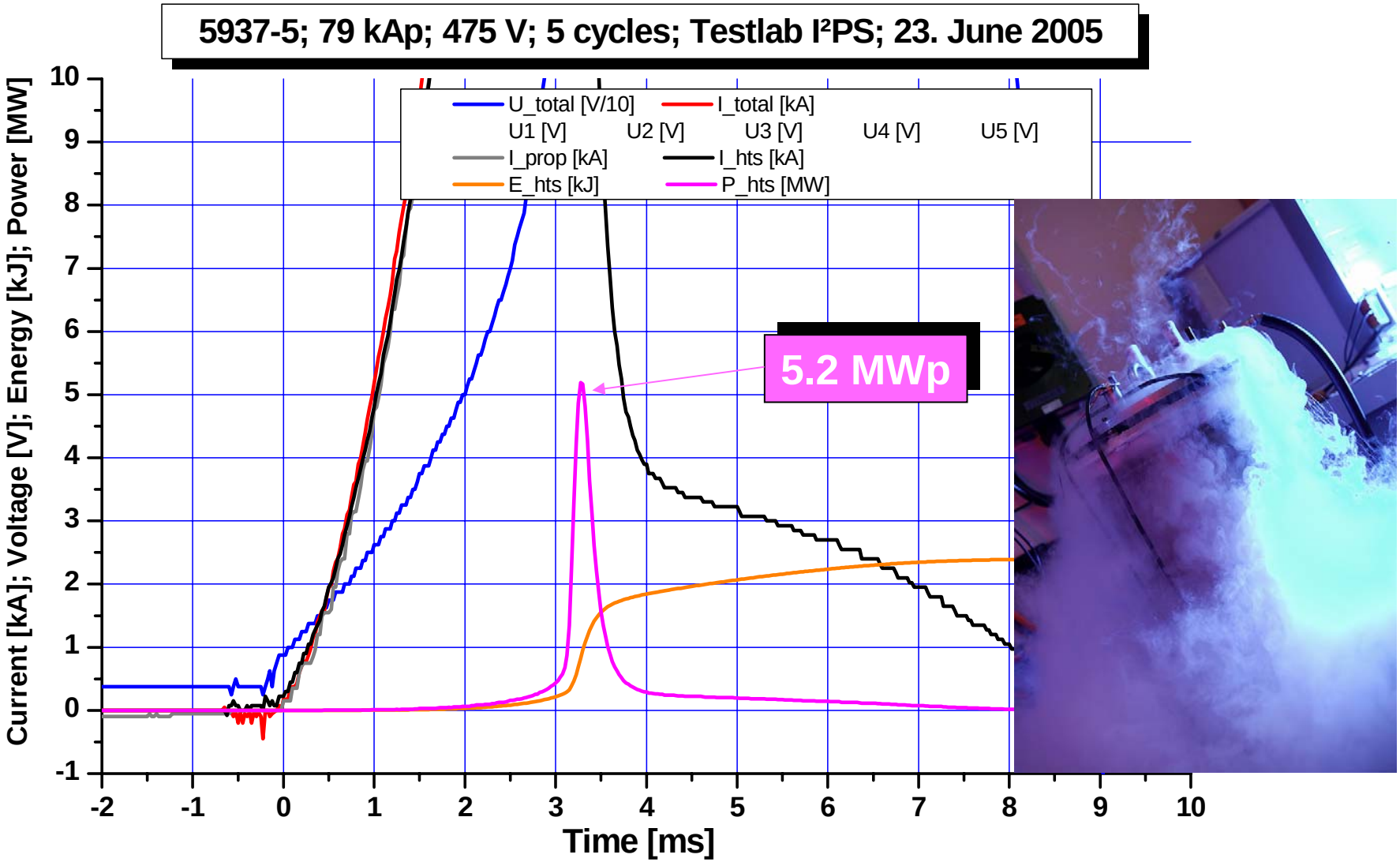

HTS Elements – Conclusions

Can we deliver up to 1000 tubes (for the Alpha-prototype) which would sustain ≥ 100 faults at the designed energy level?

YES!

- **Manufacturing has been ramped up to approx. 100 tubes/ week**
- **Ic and reproducibility further improved (even with larger batches)**
- **Mechanical stabilisation and flexible connection for HTS tubes qualified to deal with strong Lorentz forces by avoiding thermal insulation**
- **New 40 cm elements developed based on 20 cm joint tubes**
- **High power test stand set up at NSC site (up to 100 kAp, 6 MW peak) power**
- **Screening procedure to rule out early failures becomes a routine process**

Extreme robustness:

- ⇨ **Elements survived 99 repetitive quenches with up to 7.6 kJ energy dump and 5.2 MW peak power (per element and shot without failure)**
- ⇨ **Up to 20 kJ total energy dump (in 11 cycles 60 Hz) per element and shot**

Matrix Fault Current Limiter Project
Cryogenic System and Summary

Len Kovalsky, SuperPower, Inc.

HTS Solutions for a New Dimension in Power

Cryogenic System – Steady State Heat Loads

Heat loads are driven by the number of elements required – i.e., number of connections

Cryostat size operating current and voltage also have impact

<u>Steady State Heat Loads</u>

(large, ** medium, * low)***

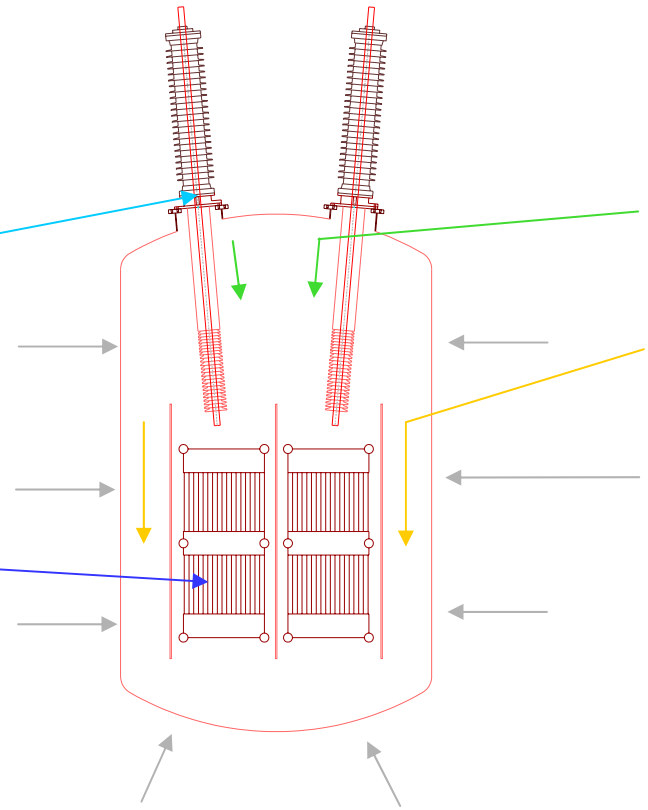

**** Lead loss**

***** Resistive loss at joints and interconnects**

**** ac losses**

*** Dielectric loss**

*** Convective loss**

**** Conduction loss**

**** Radiation loss**

Cryogenic System – Transient Heat Loads - Fault

Transient heat load impact short term RUL of HTS & long term system recovery - Fault current energy drives transient heat load - Fault current & number of cycles

Short Term Recovery Under Load

- HTS elements re-cool to superconducting state
- Cooling by LN2 bath
- Driven by heat transfer from elements to LN2 bath
- Unit is functional as HTS elements recover
- Value of shunt impedance impacts RUL

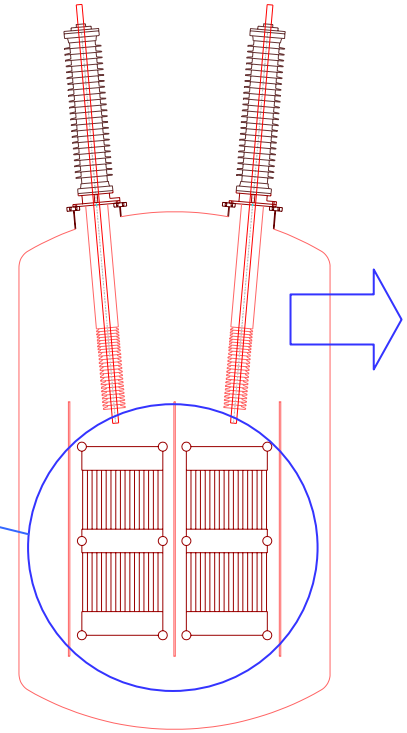

Longer Term System Recovery

- System recovers to baseline operating level (~70K, 3 atm)
- Cooling by external cooling system
- Driven by total energy deposited in the LN2 bath
- Unit is operational as system recovers, up to a finite energy deposition level

Proprietary design developed that:

- Ensures complete and uniform sub-cooled liquid nitrogen conditions for HTS elements
- All refrigeration equipment external to cryostat
- Options for either mechanical (cryo-cooler) or bulk liquid nitrogen refrigeration

FY05 Result Summary - June 28, 2005 Readiness Review Sample Comments

High Voltage:

- "No results on PD were presented at this review….Make this a higher priority in the high voltage test program."
- "The decision to ... demonstrate all required high voltage criteria in the Alpha prototype is sound."
- "Today there is not adequate information to decide what determines what might be a conservative high voltage design for an HTS device."

HTS Elements:

- "Since failure of the ceramic elements is not acceptable, it is recommended that a more rigorous statistical analysis be performed."
- "The failure of one element could contaminate the liquid nitrogen and dielectric and possibly produce a breakdown."
- "It is recommended that the root-cause failure of the ceramic elements be identified through material characterizations and failure analysis."
- "The impact of Recovery Under Load….on the survival rate of the elements should be considered in future testing."

Summary of FY05 Objective vs. Results

	FY05 Objectives	Status at End FY05
Alpha Design Requirements	**In conjunction with utility partner establish:** – Steady state current requirement – Current limiting requirements – Impact of breaker re-close, stuck breaker, i.e., worst case total energy – High voltage test requirements	• All objectives completed
High Voltage	**Characterizations of dielectric materials in cryogenic environment and develop design tools** **Complete designs for:** • Bushing system • Cryostat insulation system • Internal matrix insulation system	• Completed initial dielectric characterization work and basic design tools developed • Tested up to 200kV AC and 900kV impulse **Pending completion of:** • Additional characterizations, particularly for Partial Discharge • Verification of high voltage design through additional mock-up testing - Impulse testing, +ve, -ve, chopped, switching • Finalize detailed designs for all three HV areas

Summary of FY05 Objective vs. Results

	FY05 Objectives	Status at End FY05
HTS Elements	**Develop longer elements up to 40cm length with:** • Individual element energy levels suitable for AEP application - keep # of elements manageable • High reliability • Recovery Under Load	• Demonstrated 20cm elements at performance levels suitable for AEP application • Designed connection to join 20cm elements to make 40cm elements **Pending completion of:** • Repetitive short circuit testing to demonstrate reliability of 40cm elements -Use of statistical analysis • Root cause analysis to understand failures • Demonstrate Recovery Under Load
Matrix assembly	**Design to accommodate the connection and trigger of 100s of HTS elements to meet AEP current limiting requirements**	• Conducted matrix mock-up tests and demonstrated simplified self-trigger circuit **Pending completion of:** • Additional Mock-up tests to finalize component values • Detailed design, particularly on interconnection of parts
Cryogenic System	**Design for stable sub-cooled pressurized environment**	**Concept design complete; Pending completion of detailed design – Results of high voltage could have impact**

FY06 Objectives

Holding on detailed design of full scale Alpha Prototype

- Hold action is undesirable given the urgency to get prototype for AEP application in time frame requested
- But technically prudent to reduce project risk in light of:
  - Much higher project cost
  - State of development of High Voltage and HTS

Did not meet FY05 objectives - FY06 emphasis on completion of pending issues from FY05 in High Voltage and HTS elements

High voltage:

- SuperPower continued work with ORNL and testing at other facilities such as Waukesha for impulse
- SuperPower also has recently installed in-house AC dielectric test facility with Partial Discharge capability

HTS elements:

- Nexans moving forward on element development using upgraded facilities to get the required extensive performance data on elements