HTS Power Transformers

Presented to the

2003 DOE Peer Review Committee

For the WES/SP/RG&E/ORNL Team

By

S.W. Schwenterly
Oak Ridge
National Laboratory

E.F. Pleva
Waukesha
Electric Systems

C.S. Weber
SuperPower, Inc.

Washington, D.C. July 24, 2003

Project Participants

- **Waukesha Electric Systems:**

  Ed Pleva, Sam Mehta, Nick Aversa, Tom Golner, Dave Neder, Jeff Nemec, Glen Rhinesmith

- **SuperPower Inc.**

  Drew Hazelton, Mike Gardner, Wayne Ordon, Chandra Trautwein Reis, Chuck Weber, Marty Weloth, Jason Duval, Joe DiLegge, Rich Pasquini

  - **Advanced Energy Analysis:**

    Bill Hassenzahl

  - **Rensselaer Polytechnic Institute:**

    Professors Keith Nelson, Bob Degeneff, Shep Salon

  - **Applied Cryogenics Technology**

    George Mulholland

- **Energy East** (new parent company of Rochester Gas & Electric):

  Jim Marean (NYSEG)

- **Oak Ridge National Laboratory:**

  Bill Schwenterly, Jonathan Demko, Robert Duckworth, Mike Gouge, Isidor Sauers, Randy James

Project Purpose

- To establish the technical and economic feasibility and benefits of **HTS Transformers** of medium-to-large (>10MVA) ratings.
  - Phase I— Paper studies, 1-MVA demonstration transformer design, fabrication, and testing (complete).
  - Phase II— **SPI**— 30-MVA conceptual design, material & component verification testing, 5/10-MVA Alpha prototype design, construction, test.
  - Phase III— 30-MVA Beta prototype design, construction, test.
- At present, the project is in Phase II.
- Assembly of the prototype 5/10-MVA transformer is complete and the transformer has undergone preliminary testing.
- Ultimately, the 5/10-MVA transformer will be operated on the utility grid at WES.

HTS Transformers offer economic, operational, and environmental advantages.

- Higher efficiency.
- 2X rating overload capability without insulation damage or loss of life.
- Lower impedance and better voltage regulation.
- Potential for fault current limiting capability, allowing reduced cost for associated switchgear, breakers, etc.
- Siting advantages and lower environmental hazard due to lack of oil.
- Lighter and more compact than conventional units.
- Greater security– smaller radiators; can interface directly with underground SC cable; no oil to spill or ignite.

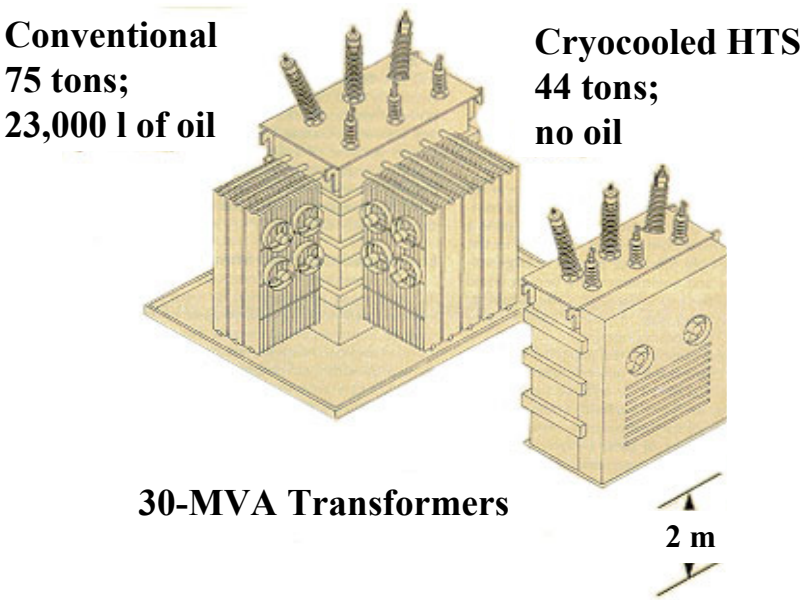

- Certain components like cryocoolers may require extra maintenance.

HTS Transformer Program Design Approach and Schedule

- **Cryocooled approach gives design flexibility.**
  - Allows operation from 20 K to 77 K permitting full system optimization.
  - Best available conductor at a given time can be operated at its optimum temperature.
- **Progression: 1-MVA → 5/10-MVA → 30/60-MVA; all at full 30/60-MVA scale.** For each stage of development:
  - Anticipated better conductor and better insulation will allow higher power and higher voltage in same frame size.
  - Better cryocoolers will provide enhanced performance and reliability.
- **The 5/10-MVA prototype transformer has been completed.**
- **Preliminary tests have been carried out on the 5/10-MVA unit.**
- **Installation of the 5/10-MVA unit in the WES substation is scheduled for late 2003.**

Specifications for the 1-MVA, 5/10-MVA, and 30/60-MVA Transformers show a progression in performance and complexity.

	1-MVA	5/10-MVA	30-MVA
Connection	1-Phase	3-Phase, Δ/Y	3-Phase, Δ/Y
Pri/Sec Voltage	13.8 kV/6.9 kV	24.9 kV / 4.2 kV	138 kV / 13.8 kV
Pri/Sec BIL	N/A	150 kV / 50 kV	550 kV / 110 kV
Pri/Sec Current	72.5 A / 145 A	67 A / 694 A	72 A / 1255 A
Overload Ratings	N/A	2-sec 10X, 48-hr 2X	2-sec 10X, 48-hr 2X
3-Day Power Outage Handling	N/A	Backup Motor/Generator	Backup Motor/Generator
Cooling System	Cryocooler	Cryocoolers	Cryocoolers
Instrumentation	Local	Local	Remote

- **BSCCO conductor is used in the 5/10-MVA transformer.**
- **Low-cost tape required for a cost-effective 30-MVA design.**
- **BSCCO J_c too low and ac losses too high for 30-MVA unit.**
- **J_c ~10^6 A/cm^2 needed for low losses and compact size.**

Major Components of 5/10-MVA Design

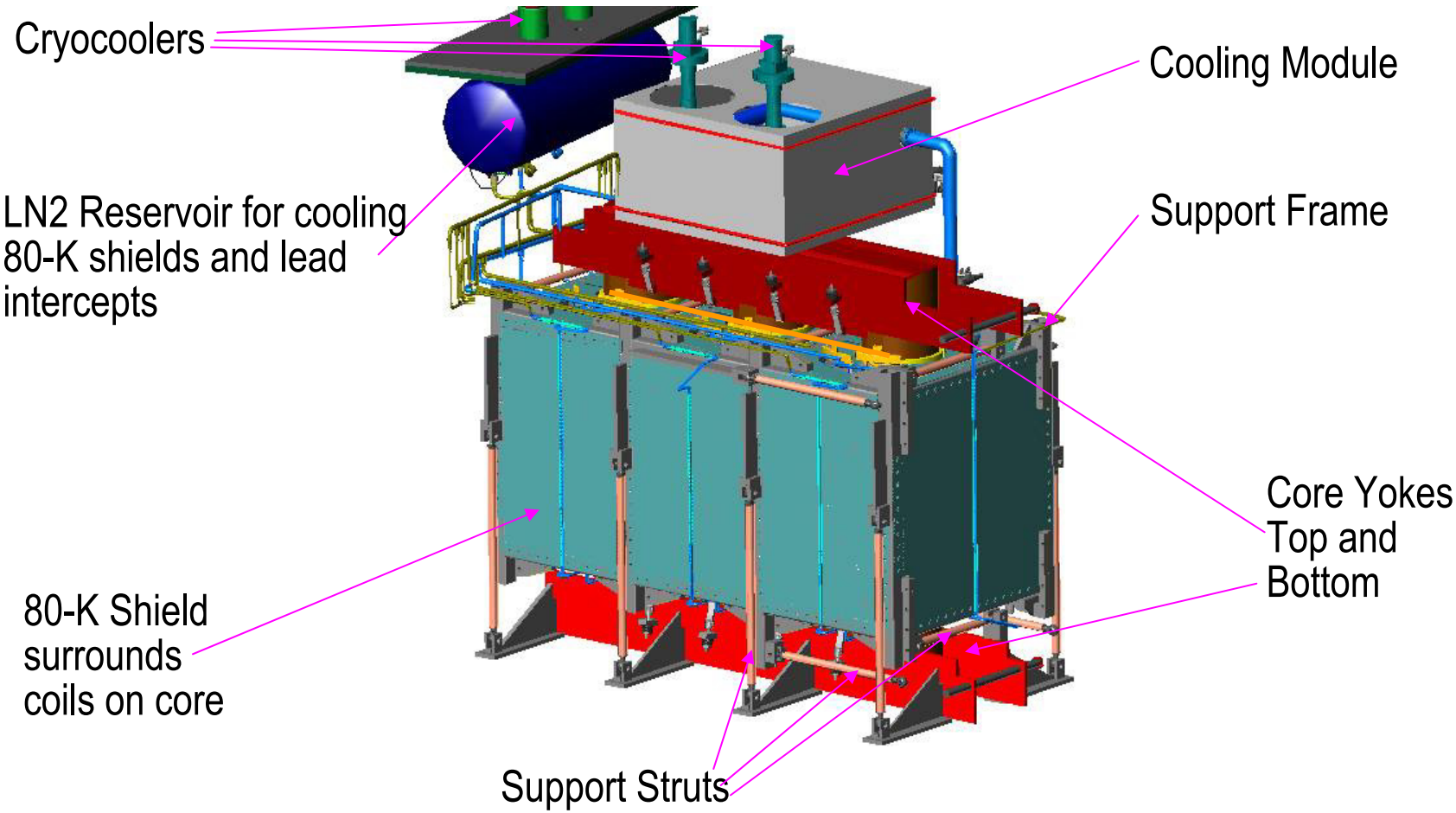

The 5/10-MVA Transformer will be installed and operated on the grid at the WES plant.

FY 2003 ORNL Plans

(from July, 2002 Peer Review)

- Participate in final assembly & testing of 5/10-MVA unit.
- Complete design of the MLI blankets for the 5/10-MVA HTS coil set.
- Refine cryogenic and high voltage insulation system designs for commercial production 30-MVA transformers.
- Carry out ac loss and critical current tests on further sample coils for the 30-MVA transformer.
- Continue high-voltage insulation tests, with focus on 550-kV BIL applications for 30-MVA transformers.
- Investigate fault-current-limiting transformer designs.
- Carry out any other required materials testing as necessary and appropriate for ORNL facilities.

ORNL FY03 Project Activities

- *NEW TASK*– Specific heat measurements on Stycast™.
- YBCO conductor samples received from SuperPower were tested.
  - Critical current vs temperature reported.
- Dielectric tests centered on partial discharge (PD) measurements on the 5/10-MVA coils PD defect simulation tests.
- Activities were focussed on completion of the 5/10-MVA transformer.
  - MLI blankets for coils were designed and procured.
  - *NEW TASK*– Completion of LN Tank design; supervision of procurement.
  - Final assembly.
  - Cooldown and testing.

Specific heat measurements were performed on Stycast™ epoxy for transformer cooldown time estimates.

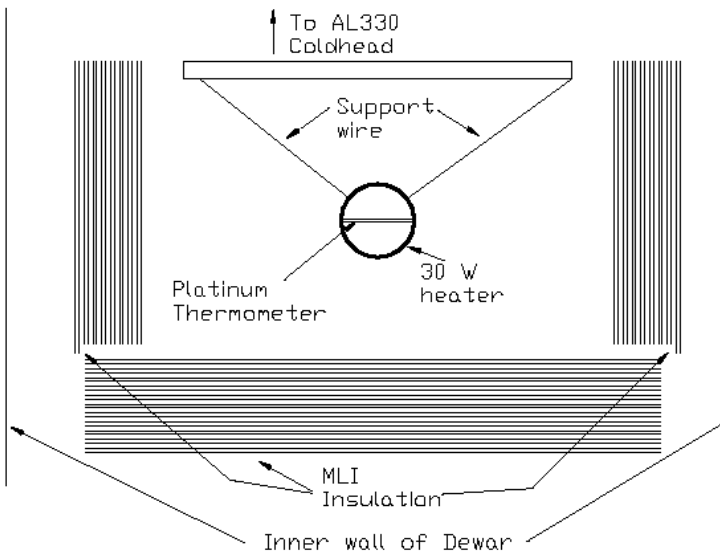

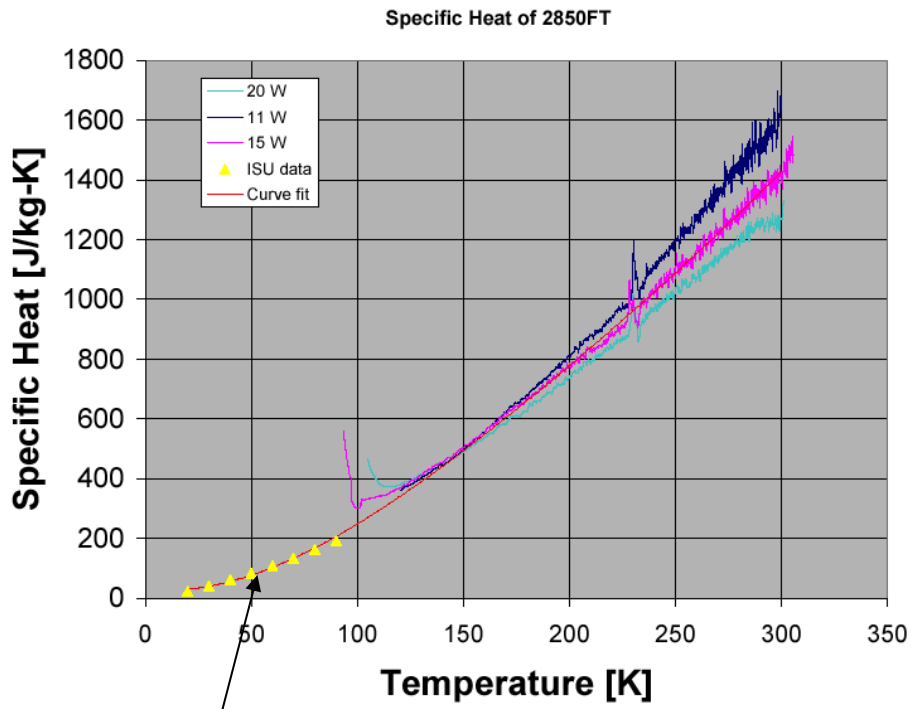

Data of Swenson, Rev. Sci. Instrum., v 68, p.1312, 1997.

Partial discharge tests were carried out.

- Initial PD tests at SuperPower on the A phase set showed inception at ~1 kV, and over 1000 pC magnitude at higher voltages.
- Similar behavior seen for B phase set. Tests on this set at WES at 77 K showed inception only improved to ~ 1.7 kV. However, coil was held for over 1/2 hr at full 15-kV operating voltage without breakdown.
- Team assembled at SuperPower for careful inspection of unpotted C phase coils & warm PD tests in air. Internal improvements were made, and all phases received some external improvements.
- However, completed C phase performed similarly to other coils.
- PD patterns indicate low-pressure voids, in epoxy or filler.
- ORNL digital PD detector was used at both locations.
- Cold PD tests on the completed transformer showed 5-7 kV inception and much lower magnitudes than single coils.

77-K PD tests were performed on B Phase Coil at WES.

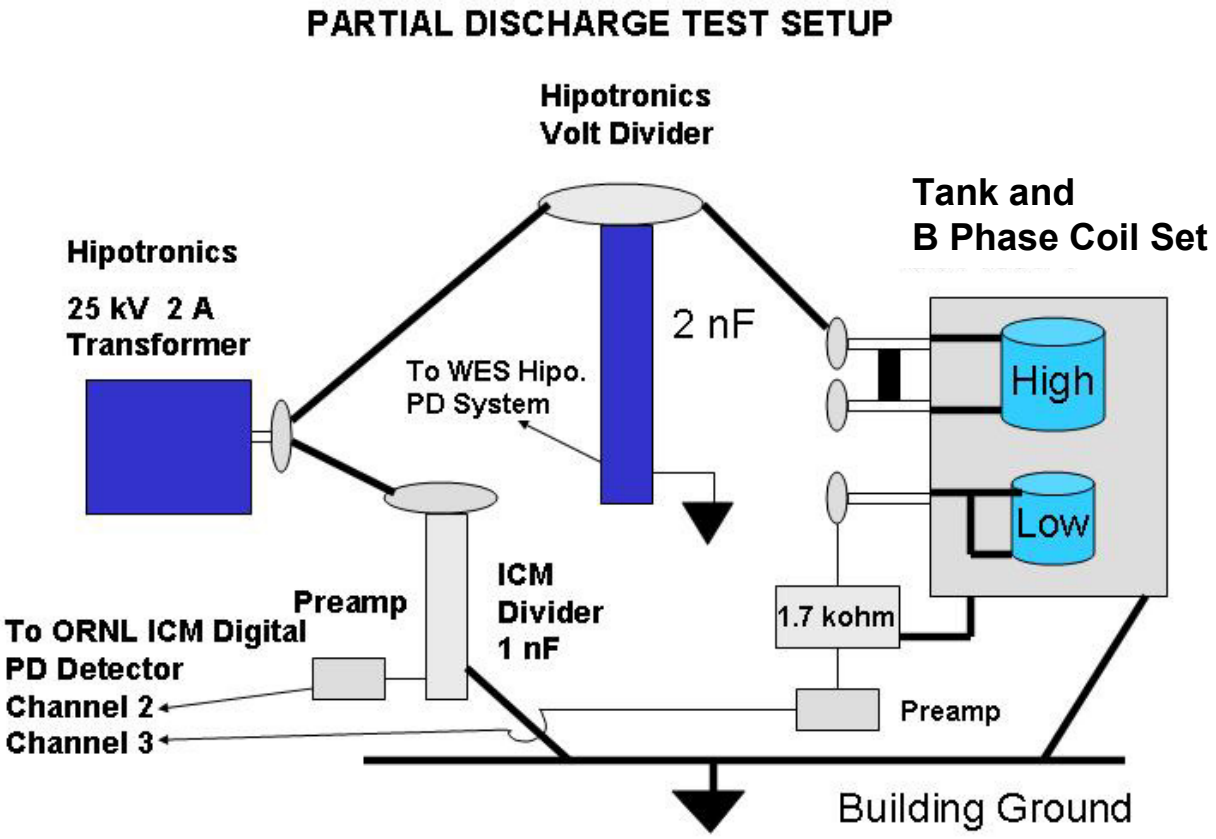

PD data from the Phase B Coil Set suggested the presence of voids.

- Digitized phase and amplitude resolved PD data.
- Measured on LV side of coil – can detect internal defects in coil.
- Low inception voltage seen at WES on Phase B following casting.
- Arch-like PD pattern similar to that of void in epoxy.
- Later tests on unpotted Phase C coil at SuperPower showed no PD prior to final casting, at these voltages.
- Causes are under investigation.

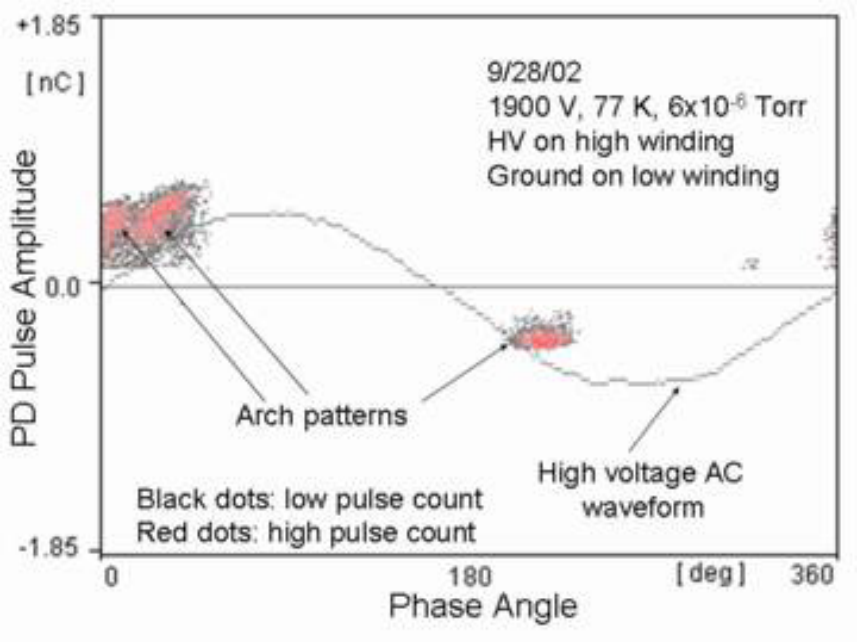

Phase B coil set PD Display

PD was measured in an artificial void to determine the effect of varying pressure.

- Two samples fabricated with different void shape: thin flat void and rectangular void.
- Void was pressurized with pure N_2.
- Pressure range: 0.013 – 100 kPa.
- PD Inception follows shape of Paschen curve, which governs gas breakdown.
- Deviations observed near Paschen minimum.
- Field enhancement and low pressure can significantly lower PD inception voltage.

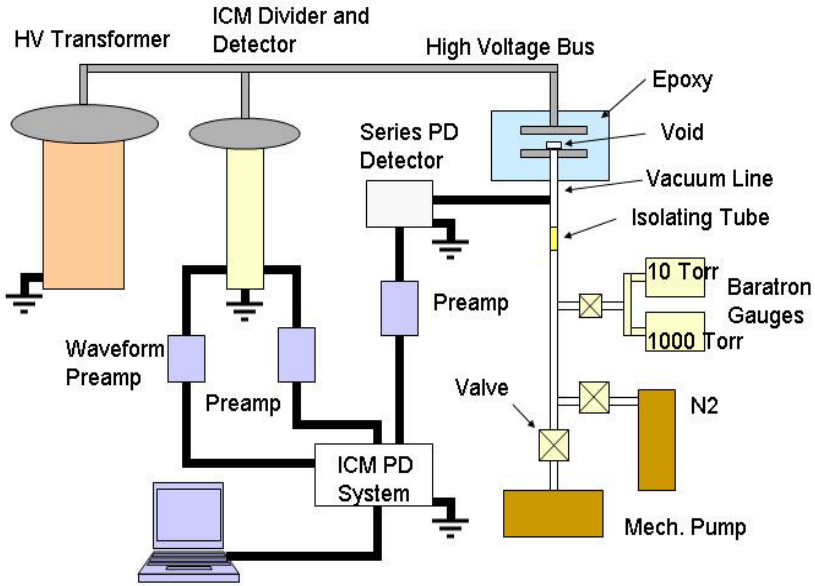

Experimental Setup

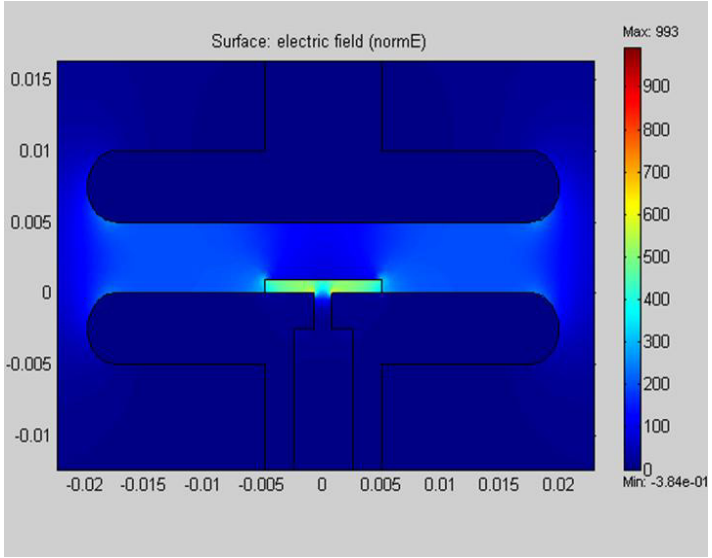

Field map in thin flat void showing field enhancement in the void leading to reduction in inception voltage

PD data from artificial void – Effect of Pressure

- PD inception voltage is below 1 kV rms at low pressure
- Voltage is plotted vs p x d
- Paschen minimum represents lowest voltage possible for PD inception for uniform field
- Field enhancement in void due to difference in permittivity can further lower inception voltage
- Cannot completely explain the low inception voltage in cast coil.

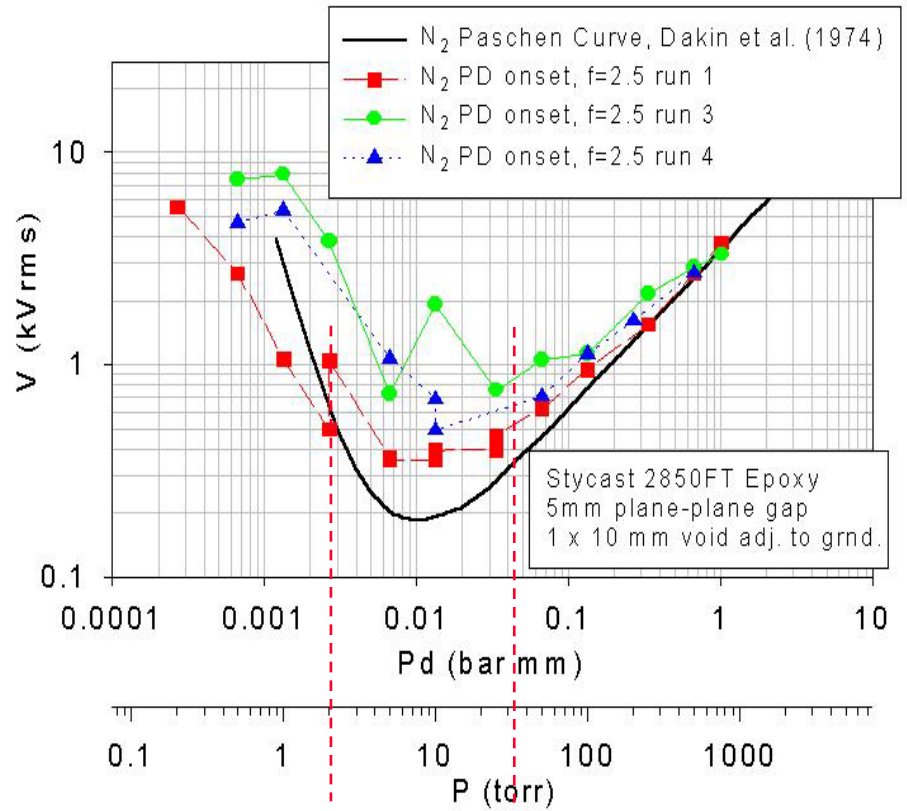

Calculated PD inception voltage across 1-mm void with N_2 (f = correction factor).

Void shape and orientation to electric field can also reduce PD inception voltage.

- PD was measured on samples that simulate oriented voids.
- PD inception lower for void not aligned with electric field.
- Electric field model verifies higher fields in asymmetric voids.

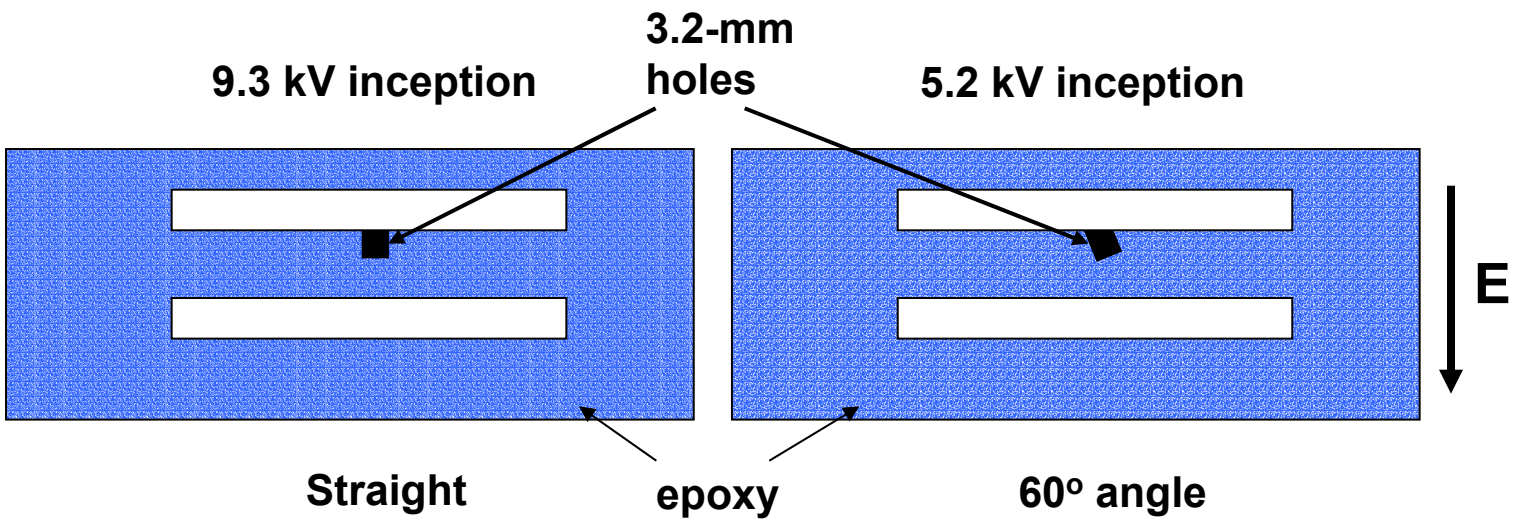

The 5/10-MVA transformer was assembled in the Progress II building, about three blocks from the main WES building that houses the test floor.

Electrical power for testing the transformer in the Progress II building is limited.

Assembly of 5/10-MVA unit began by mounting coil frame on core.

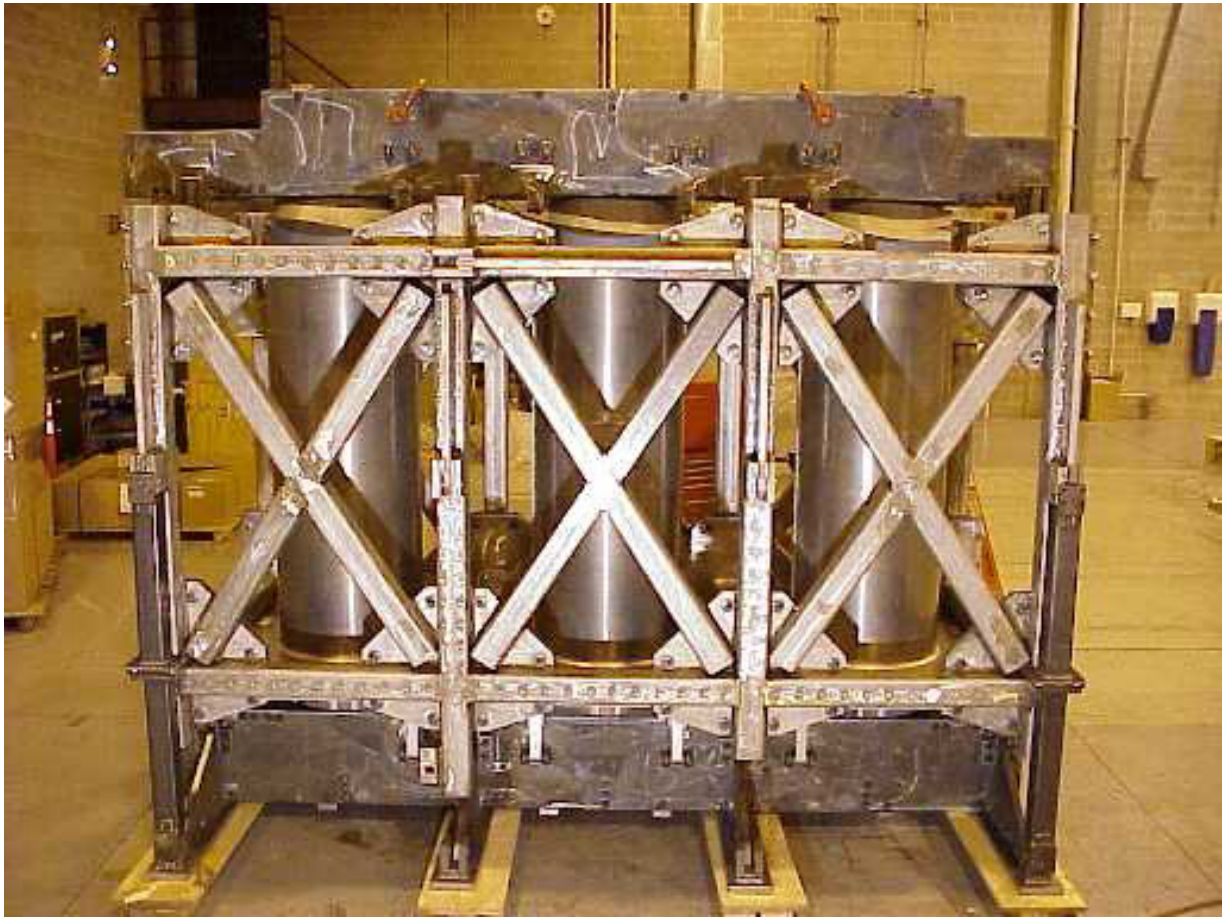

LV Coil before Phase Set assembly

Completed Phase Set

Phase Sets were landed individually.

Installed Phase Sets await addition of the 80-K thermal panels, LN piping and Helium System.

The Cover Assembly was pre-fitted to check piping alignment.

Core/Coil Assembly was lowered into the vacuum tank first.

The Cover was installed with the Cooling Module mounted.

Cryocooler Compressors are located in the End Cubicle; Water Chiller is at right.

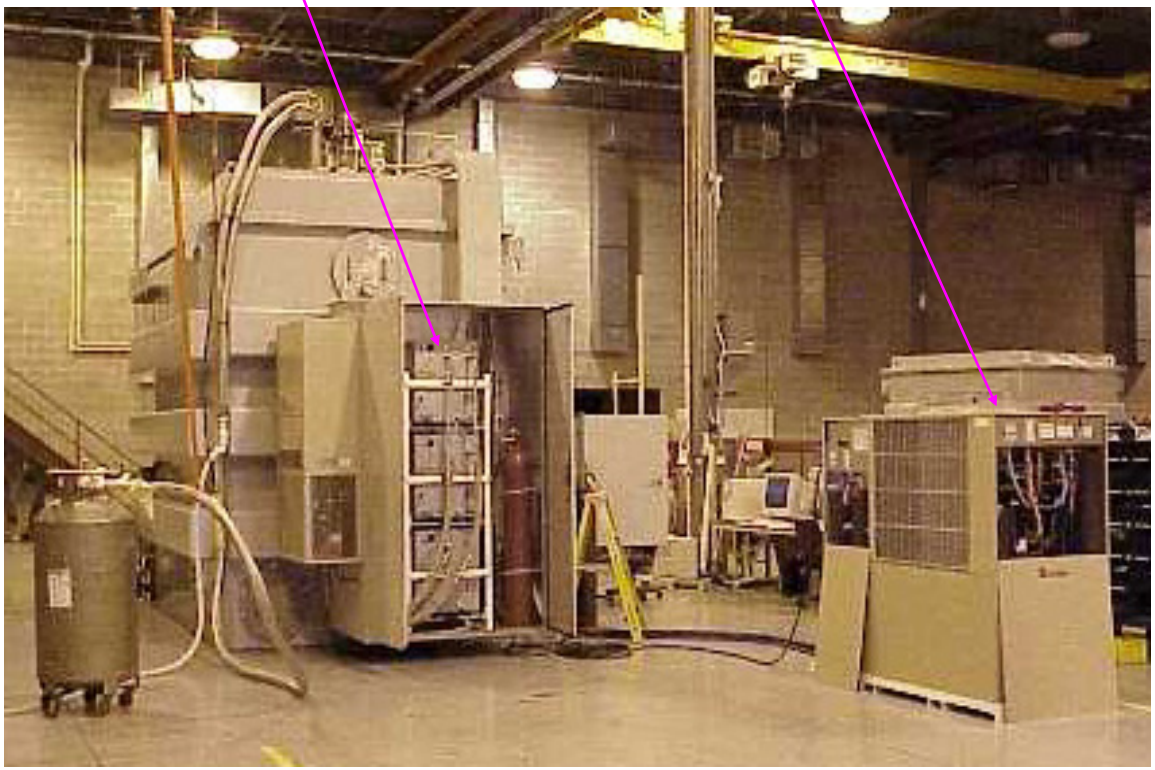

The Data Acquisition System displayed various transformer subassemblies.

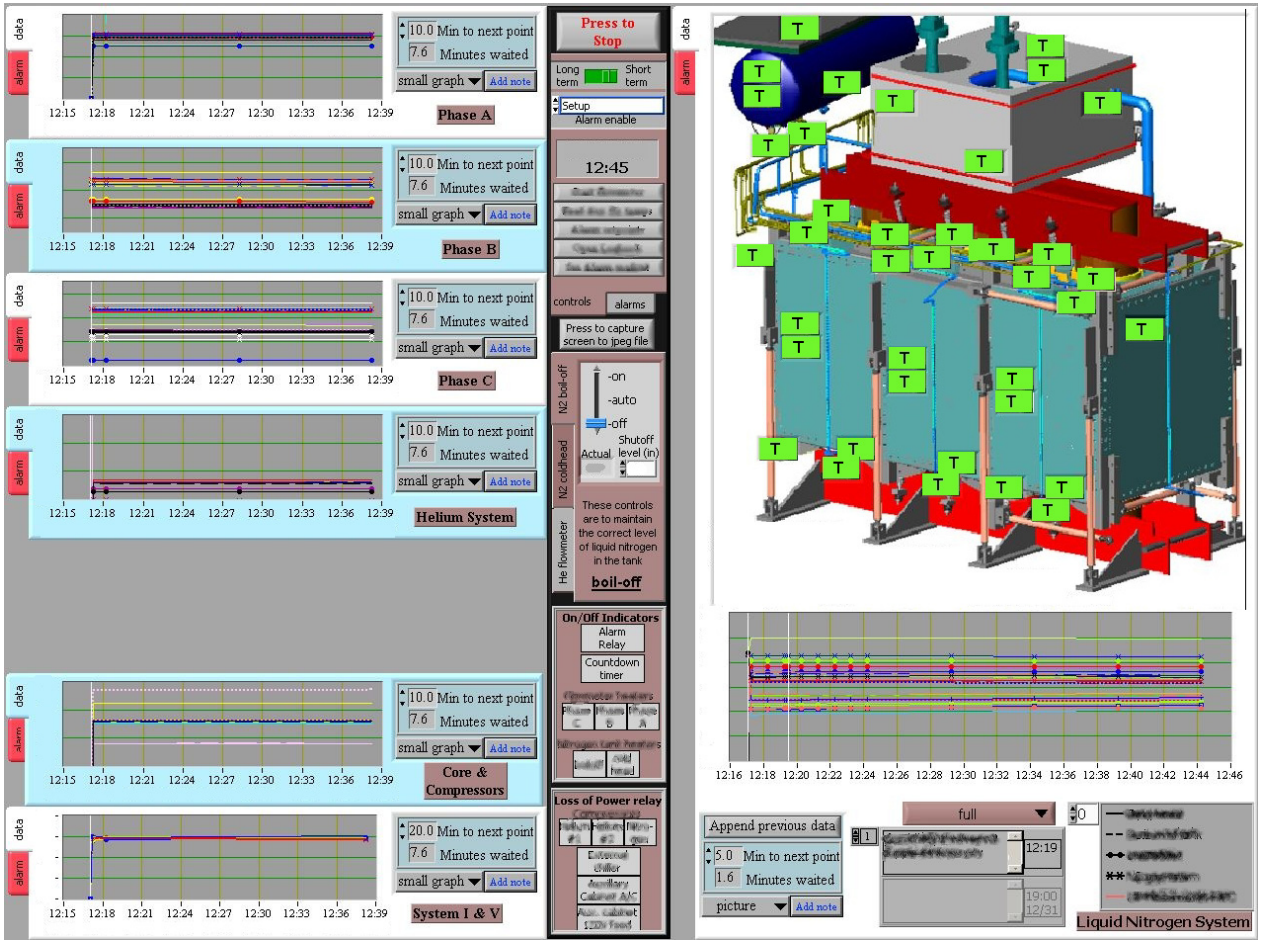

Completed 5/10-MVA Unit is ready for testing.

Preliminary Operations and Cooldown

- All system joints were leak-checked to 10^{-9} atm-cc/sec before installation in tank.
- Global leak check in evacuated tank showed that <u>total</u> leak rates in both the LN and Helium systems were in range of 10^{-6} atm-cc/sec, but pressurizing had no effect on tank vacuum with warm unit.
- Preliminary electrical tests at 300 K included ratio, winding resistance, capacitance, and megger to core– all OK.
- Transformer was cooled to 30 K in about 12 days.
  - LN flow was initially under manual control during cooldown.
  - After LN tank was filled, all cryogenic systems ran unattended in closed cycle.
- Baseline vacuum 3 x 10^{-5} torr (close to N_2 vapor pressure at 30 K).
  - Vacuum was affected by LN and He pressures with cold unit.

Cooldown required about 12 days.

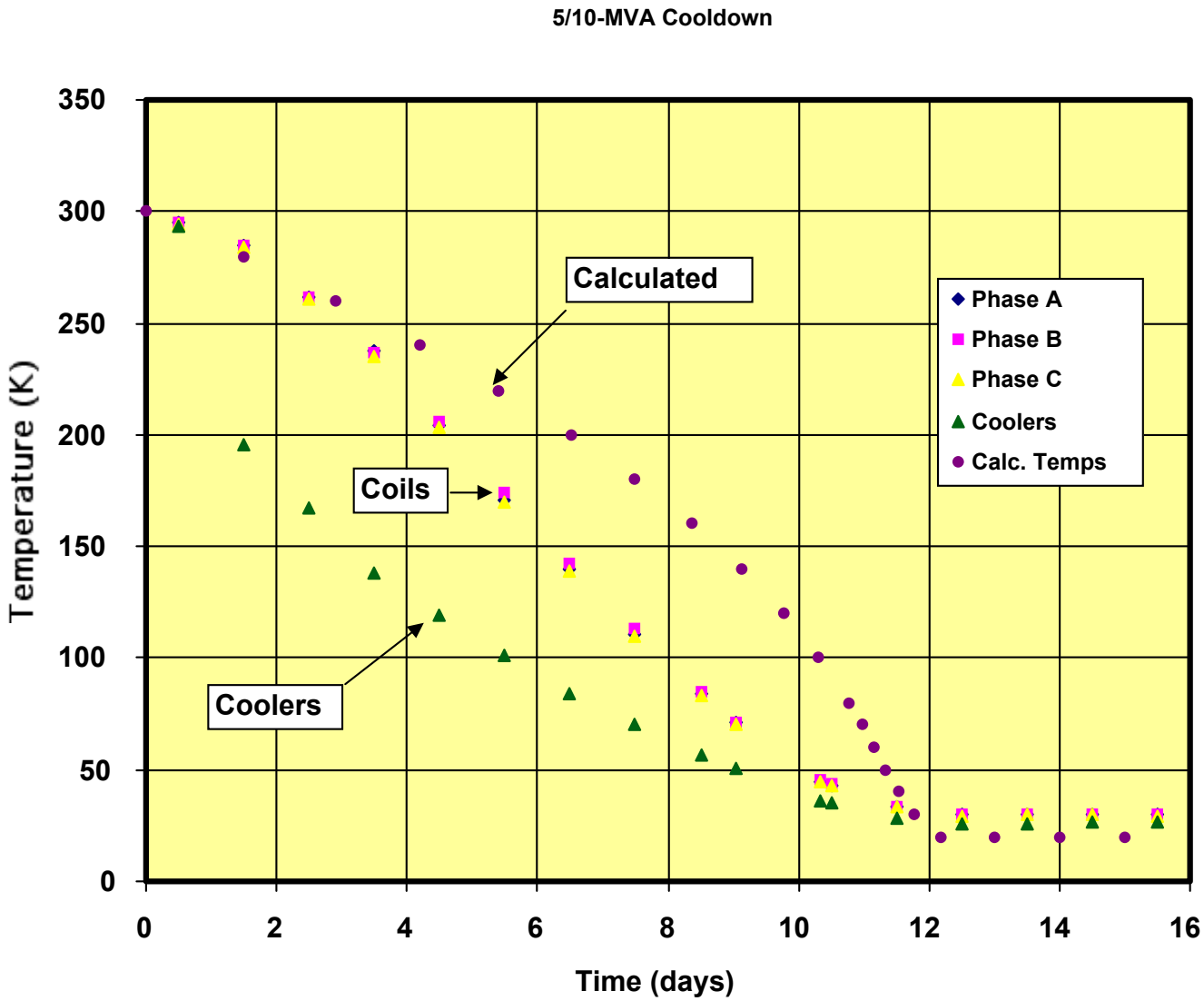

Overview of Electrical Tests I

- During cooldown, winding resistances fell:
  - HV– 2.8 Ω at RT to 0.01-0.04 mΩ at 30 K.
  - LV– 0.03 Ω at RT to 0.01-0.03 mΩ at 30 K.
- Another ratio test after cooldown showed high excitation current on C phase.
  - 1.2 A at 25 V, compared to 0.1 A on other phases.
  - Explanation 1– Ground loop in instrumentation leads or piping.
  - Explanation 2– Short from MLI or LN panels to frame or core.
- Short-term single-phase tests were carried out with the LV winding shorted. Measured impedance matched design calculation.
  - All phases ~210 V, 67/705 A, 0.84% impedance.
  - AC supply variac was overheating at these currents.
  - Maximum current of 94 A (1.4 X) was reached.

Overview of Electrical Tests II

- Three-phase tests were carried out with all 3 LV phases shorted together.
- First tests with three variacs in Wye connection could only run at 60 A for about 30 min before variacs overheated. No significant heating seen in windings.
- A three-phase step-down transformer was added to boost variac current. This allowed tests at full line current of 116 A into HV winding.
- Impedance matched single-phase tests.

High Current Low Voltage Test

C Phase Temperatures with 3-Phase Current

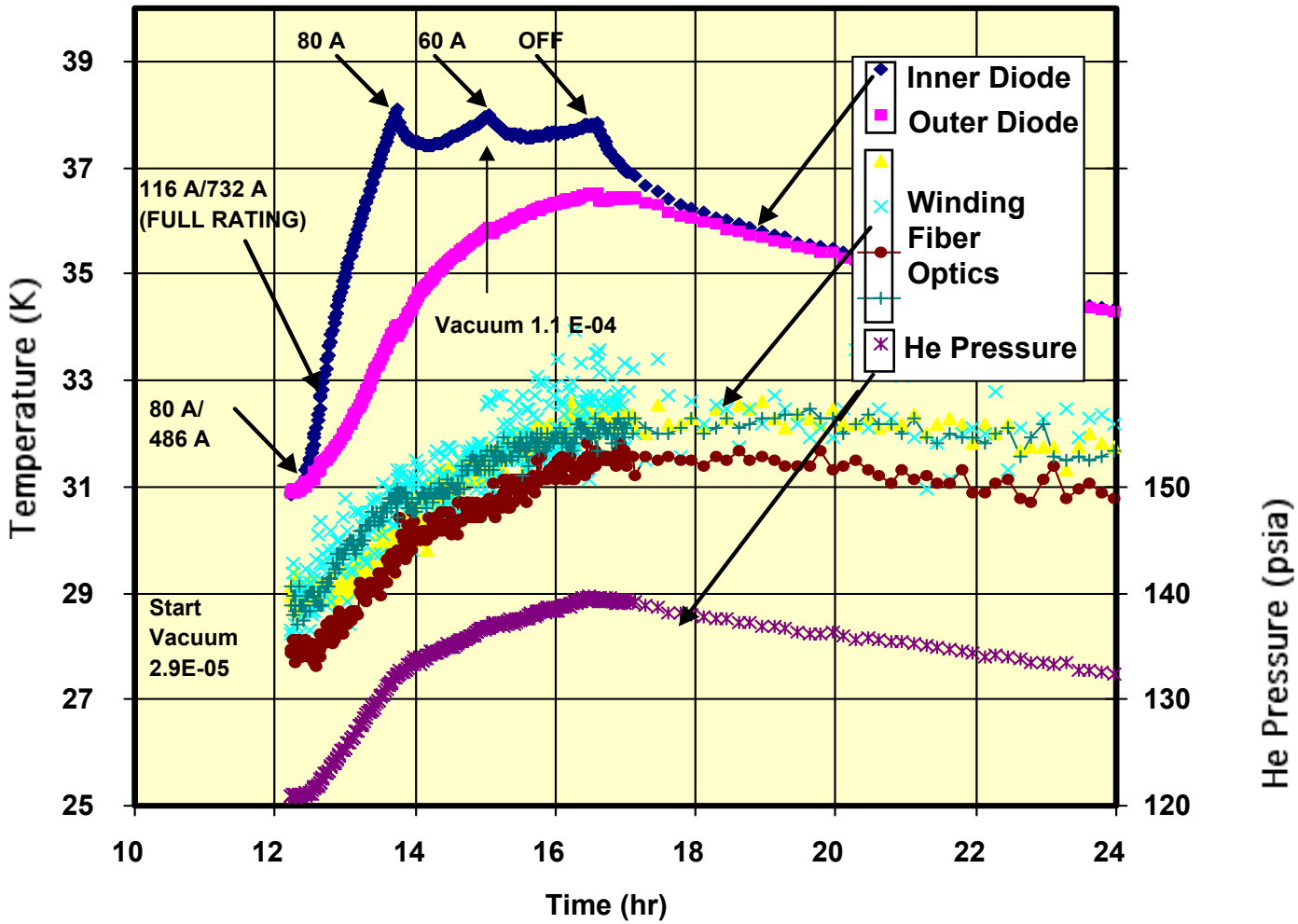

Final test ran for 12 hours.

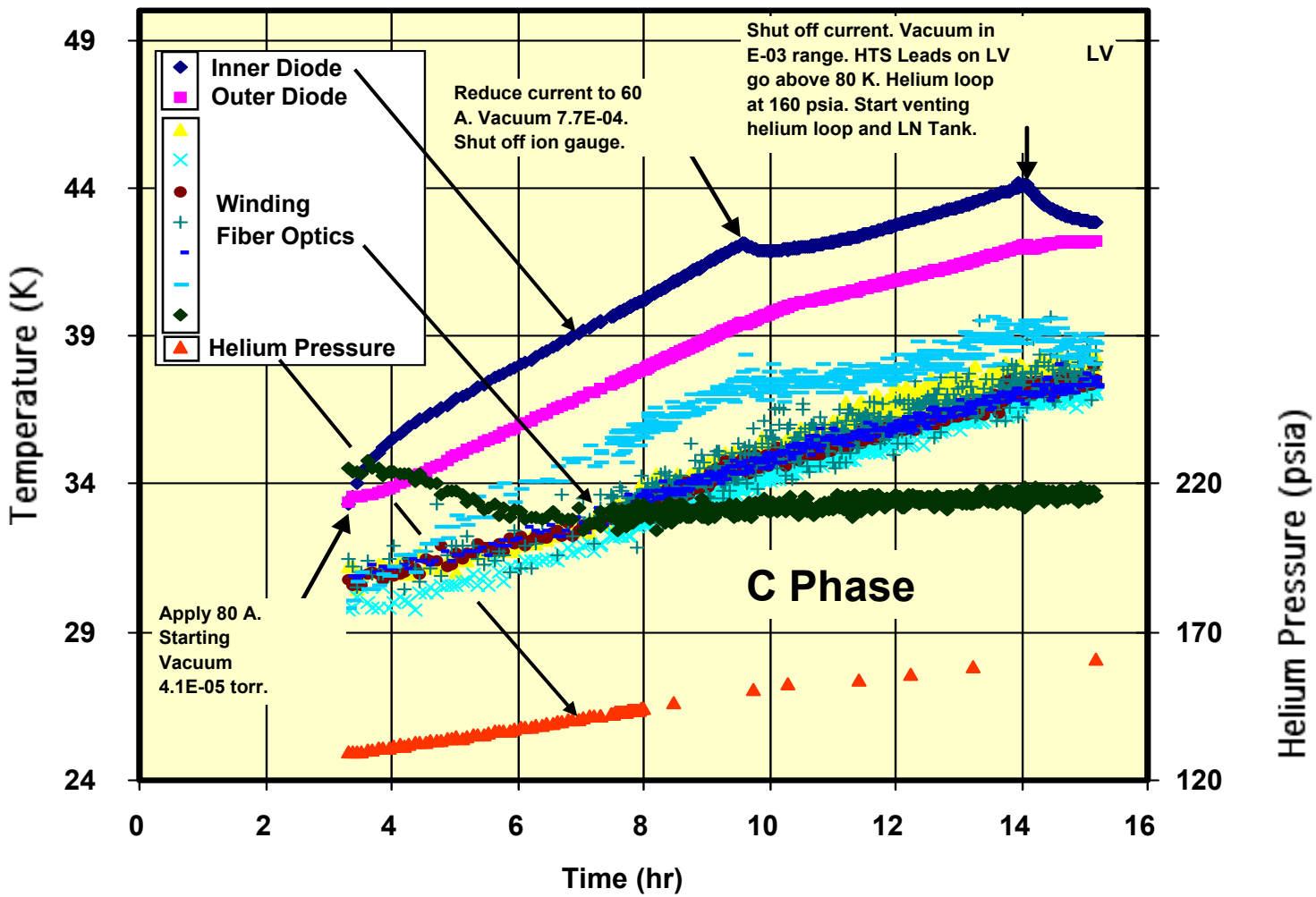

Discussion of Test Results

- Cryogenic system ran well and maintained 4.5-ton cold mass at 30 K and below.
- Unattended operation was achieved with cryogenic system.
- The transformer coils have been tested short term at full operating voltage, though with high PD.
- Windings reached 1.4 X single-phase I– no mechanical failure.
- Faster temperature rise rate on external coil sensors in 3-phase current tests suggests that heat is coming from <u>outside the coils</u> rather than from inside the windings.
- Short around core on C phase must be found and eliminated.
- Leakage of both LN and He into vacuum must be reduced to lower heat load.

Near-term repair plans mitigate risk.

- Transformer has been warmed up – repairs will begin in early August.
- Internal components will be carefully inspected.
- Short Issue– Connections will be removed in stages– excitation current tests after removing each stage will identify the location.
- Leak Issue– All piping joints and components will be stringently leak checked, to minimize the cold global leak rate.
- PD Issue– Existing coils cannot be repaired.
- A "punch list" has been generated covering many other small items that will improve ease and reliability of operation.

Re-assembly / test plan will further reduce risk.

- The amount of disassembly needed to fix problems will be minimized by a stepwise approach.
- Extreme care will be taken in re-assembly so as not to introduce shorts or continuous current loops in piping, instrument leads, or MLI.
- Existing cleanliness and material control procedures will be followed to minimize PD and outgassing in tank.
- After re-assembly, the transformer will be re-cooled and short-circuit impedance tests will be repeated in Progress II.
- Transformer will then be moved cold to main WES test floor for long-term tests with 3-phase high voltage / high current.
- Transformer will be installed in WES substation in late 2003.
- Alarm setpoints will warn of out-of range conditions.
- AC withstand & impulse tests will be done last to reduce failure risk.
- At conclusion of tests, existing coils will be cut apart and examined.

FY 2003 Plans

- Participate in final assembly & testing of 5/10-MVA unit.
- Complete design of the MLI blankets for the 5/10-MVA HTS coil set.
- Refine cryogenic and high voltage insulation system designs for production.
- Test further ac loss sample coils for the 30-MVA transformer.

FY 2003 Performance

- ✓ Assembly was completed, transformer was cooled down successfully and the first tests were carried out.
- ✓ Completed blanket design; blankets were procured and installed on transformer.
- ● Existing cast-coil structures in 5/10-MVA unit achieved operating voltage, but with high PD and low inception levels—more work necessary.
- – SuperPower did not request further testing of ac loss coils.

FY 2003 Plans

- Continue high-voltage insulation tests, with focus on 550-kV BIL applications
- Investigate fault-current-limiting transformer designs.
- Carry out any other required materials testing as necessary.
- New tasks were taken on.

FY 2003 Performance

- ✓ Activity focussed on coil PD tests and defect simulation experiments.
- – Deferred to next FY; incorporation of transformer-type auxiliary FCL windings may be possible.
- ✓ Stycast specific heat measurements were carried out. Short samples of YBCO received from SuperPower– critical current vs temp measured as requested.
- ✓ LN Tank design package was completed; ORNL supervised procurement by WES. YBCO tests.

The Team's FY 2004 Plans Include:

- Completion of tests and installation of 5/10-MVA unit on the grid.
- Further refinement to the 30-MVA transformer reference design.
- Proposed 2-year extension of the transformer SPI addressing outstanding issues and 2002 Peer Review panel comments:

ORNL

- Cryogenic electrical insulation materials studies for 30-MVA+ design ratings– partial discharge, ac and impulse breakdown strength, aging, tan delta, thermal shock resistance, thermal conductivity, and heat capacity.
- Investigate electrical & mechanical compatibility between all components of the insulation system.
- Investigate incorporation of second-generation YBCO materials into the 30-MVA reference design, including ac loss, overcurrent capability, and fault current limiting issues.

WES

- New features– pulse tube coolers, tap changers, fault current limiting.
- Optimize manufacturability and marketability– design simplicity, reliability, cost, interface to HTS cables, generators, FCL, etc., match to utility requirements.

Research Integration

- ORNL/WES/SP/EE team possesses strong complementary abilities in research, engineering, manufacturing, & utility operation.
  - Consultants— RPI, Advanced Energy analysis, Applied Cryogenics Technology
- All partners worked together on completion, cooldown, and testing of the 5/10-MVA transformer— ORNL made 2 visits to SuperPower and 4 extended visits to WES.
- Transformer components designed in three different locations successfully came together.
- ORNL personnel participated in partial discharge tests at both WES and Superpower and initiated test program to simulate coil defects leading to PD.
- Communication several times a week by phone, E-mail, and fax.

Joint Presentations and Media Coverage

- **Presentations:**
  - August, 2002— Applied Superconductivity Conference
  - April, 2003— WES hosted EPRI Superconductivity Workshop
  - September, 2003— Cryogenic Engineering Conference
- **Technical Papers in:**
  - October, 2002— Ann. Report of Conf. On Electr. Ins. & Diel. Phenom.
  - December, 2002— IEEE Trans. On Diel. & Electr. Ins.
- **Media Coverage**
  - High Tech Ceramics News (Aug. 2002)
  - Superconductor Week (10/14/02)
  - Superconductivity News Update (12/31/02)
  - Public Power (March-April 2003)
  - Electric Transmission Week (6/9/03)
- **ORNL Web Site—**
  - www.ornl.gov/HTSC/htsc.html
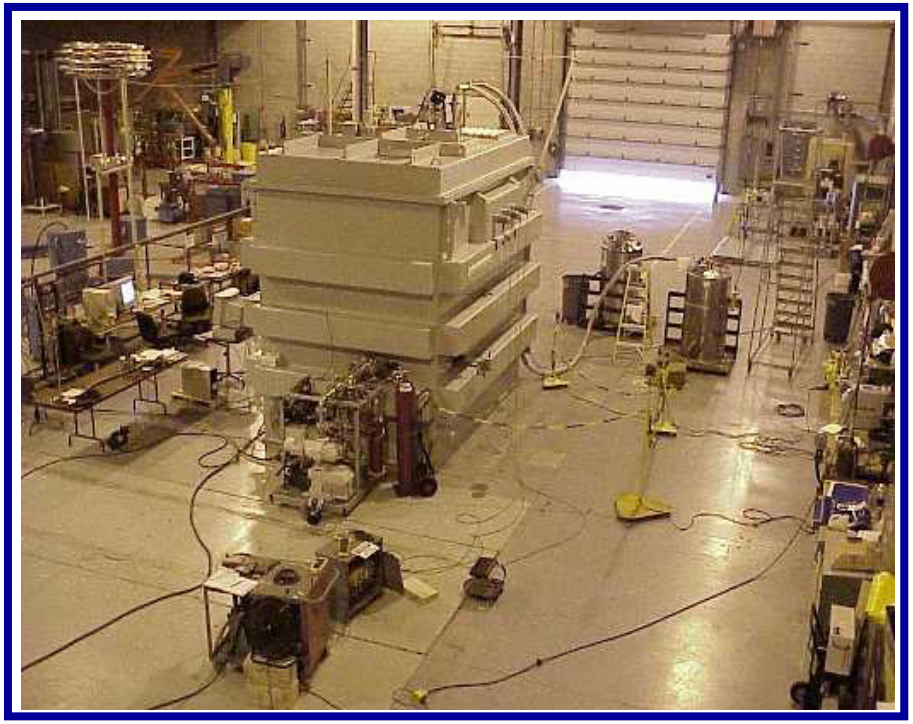
ORNL Continues to Support the Team in Long-Term HTS Transformer Development.