HTS Power Transformers

Presented to the

2001 DOE Peer Review Committee

For the WES/IGC/RG&E/ORNL Team

by

S.W. Schwenterly
Oak Ridge
National Laboratory

S.P. Mehta
Waukesha
Electric Systems

M.S. Walker
IGC
SuperPower

August 2, 2001

Project Participants

- **Waukesha Electric Systems:**

  Sam Mehta, John Wagner, Nick Aversa, Ed Pleva, Tom Golner, Mike Clark, Bill Aschenbrenner, Bill Henning, Peter McKenny

- **IGC-SuperPower**

  Mike Walker, Brij Bihani, Selim Cetiner, Roger Farrell, Mike Gardner, Pradeep Haldar, Drew Hazelton, Wayne Ordon, Chandra Trautwein Reis, Scott Richardson, Xin Shi, Bran Vidinski

  - **Advanced Energy Analysis:**
    Bill Hassenzahl
  - **Rensselaer Polytechnic Institute:**
    Professors Bob Degeneff, Keith Nelson, Shep Salon
  - **Applied Cryogenics Technology**
    George Mulholland

- **Rochester Gas & Electric:**

  Ron Johnson, Bob Jones

- **Oak Ridge National Laboratory:**

  Ben McConnell, Bill Schwenterly, Jonathan Demko, Isidor Sauers, Randy James

Project Purpose

- To establish the technical and economic feasibility and benefits of **HTS Transformers** of medium-to-large (>10MVA) ratings.
  - Phase I— Paper studies, 1-MVA demonstration transformer design, fabrication, and testing (complete).
  - Phase II— **SPI**— 30-MVA conceptual design, material & component verification testing, 5/10-MVA Alpha prototype design, construction, test.
  - Phase III— 30-MVA Beta prototype design, construction, test.
- At present, the project is in Phase II and focussed on design and fabrication of a prototype 5/10-MVA transformer, to be operated on the utility grid at WES.

HTS Transformers offer economic, operational, and environmental advantages.

- Higher efficiency.
- 2X rating overload capability without insulation damage or loss of life.
- Lower impedance and better voltage regulation.
- Potential for fault current limiting capability, allowing reduced cost for associated switchgear, breakers, etc.
- Lower environmental hazard due to lack of oil.
- Lighter and more compact than conventional units.

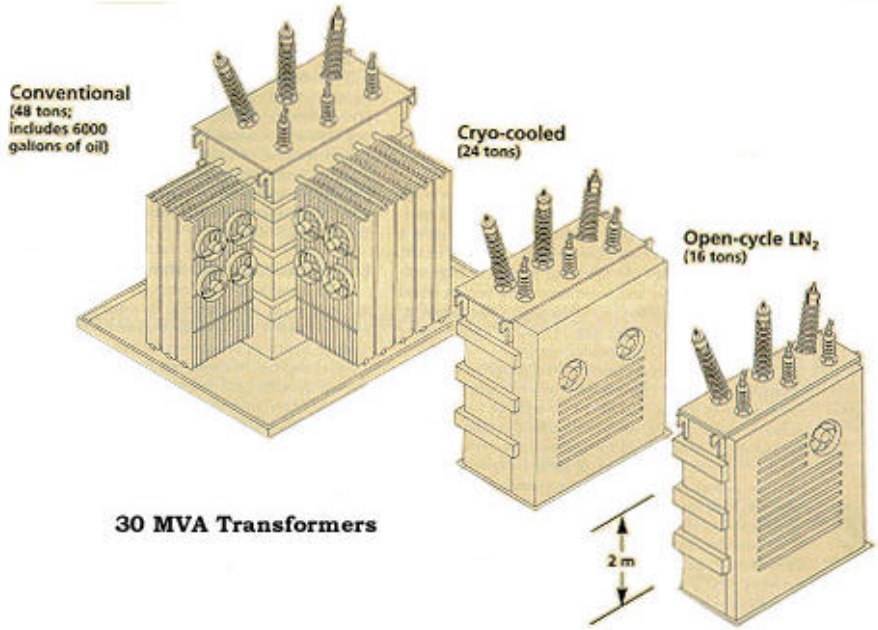

HTS Transformer Program Design Approach and Schedule

- **Cryocooled approach gives design flexibility.**
  - Allows operation from 20 K to 77 K.
  - Best available conductor at a given time can be operated at its optimum temperature.
- **Progression from 1-MVA ® 5/10-MVA ® 30/60-MVA; all at full 30/60-MVA scale.** For each stage of development:
  - Anticipated better conductor and better insulation will allow higher power and higher voltage in same frame size.
  - Better cryocoolers will provide enhanced performance and reliability.
- **We are now in the last year of a 3.5-year schedule for the 5/10-MVA SPI project.**
- **Operational tests on 5/10-MVA unit are scheduled for April, 2002. Tests on grid would start June, 2002.**

Statement by WES and IGC-SuperPower

- Much of the 5/10 MVA design is proprietary and confidential.
- Therefore to convey as many results as possible for this review:
  - Data will be presented, but sometimes with reduced or arbitrary scale units.
  - Design information will be presented, to the extent possible.
  - Reference will be made to those similar elements of the 1-MVA transformer that can be shown in detail.

Specifications for the 1-MVA, 5/10-MVA, and 30-MVA Transformers show a progression in performance and complexity.

	1-MVA	5/10-MVA	30-MVA
Connection	1-Ø	3-Ø, Δ/Y	3-Ø, Δ/Y
Pri/Sec Voltage	13.8 kV/6.9 kV	24.9 kV / 4.2 kV	138 kV / 13.8 kV
Pri/Sec BIL	N/A	150 kV / 50 kV	550 kV / 110 kV
Pri/Sec Current	72.5 A / 145 A	67 A / 694 A	72 A / 1255 A
Overload Ratings	N/A	2-sec 10X, 48-hr 2X	2-sec 10X, 48-hr 2X
3-Day Power Outage Handling	N/A	Backup Motor/Generator	Backup Motor/Generator
Cooling System	Cryocooler	Cryocoolers	Cryocoolers
Instrumentation	Local	Local	Remote

The 1-MVA Transformer Demonstrated All Major Features of the 5/10-MVA Conceptual Design.

The 5/10-MVA HTS Transformer Concept grew out of the 30/60-MVA Design.

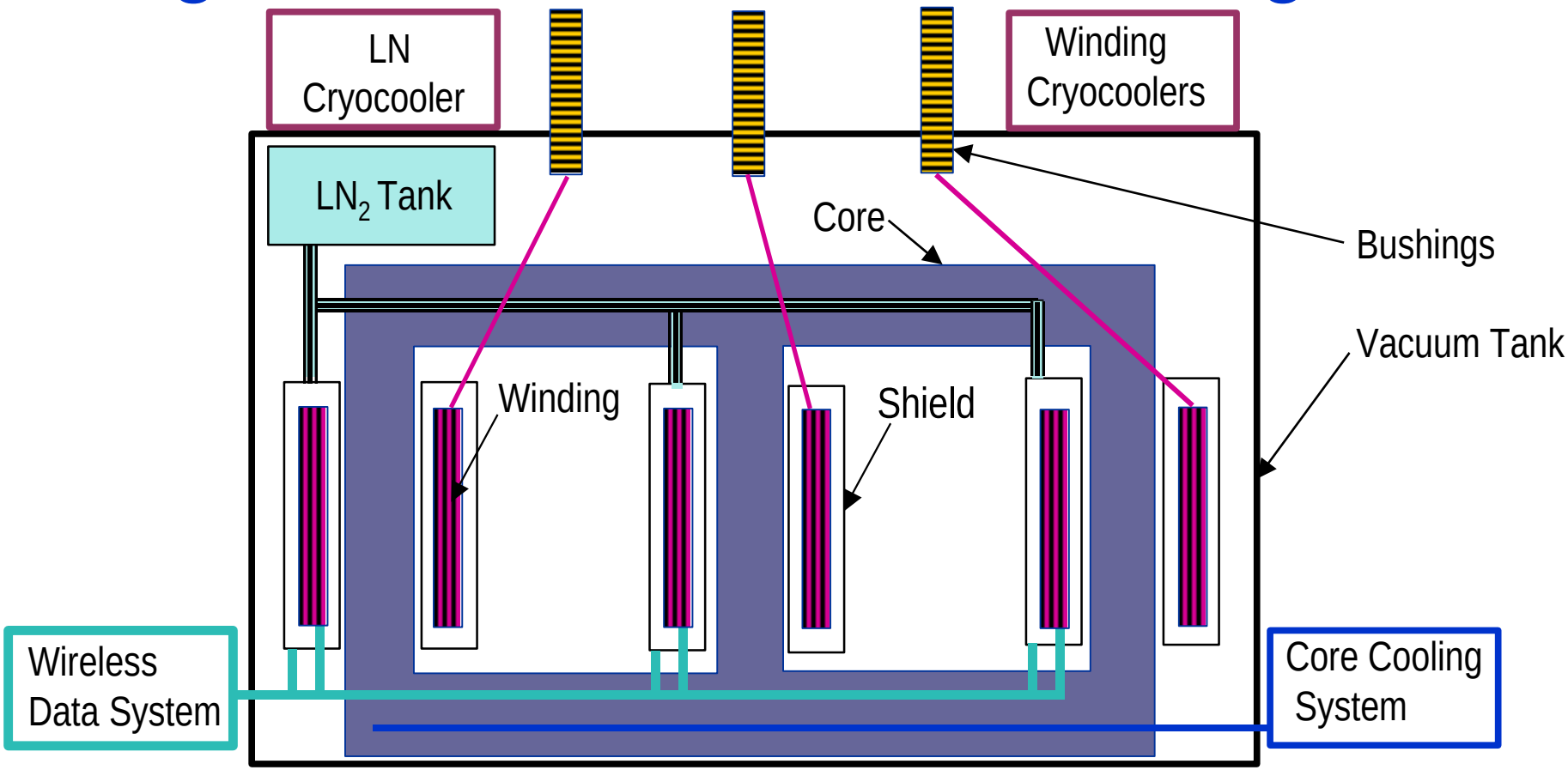

Cutaway Showing Major Components of 5/10-MVA Design (Except for HTS Coils)

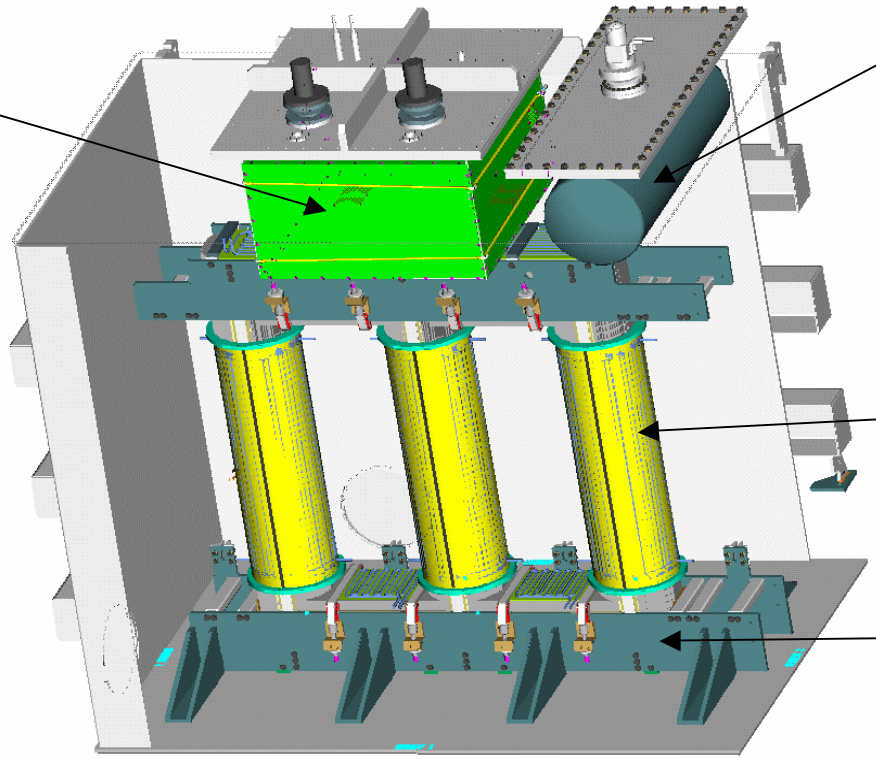

The first full 5/10-MVA height and size HTS Transformer coil comes off the winder.

- Coil to be tested thoroughly, cut up, and analyzed.

The 5/10-MVA Transformer will be installed and operated on the grid at the WES plant.

Research Integration: Team Effort Is Reflected in the 5/10-MVA Design.

- Specifications, Objectives - RG&E, WES, IGC, ORNL
- Transients, Dielectric Design – to 150 kV BIL for 5-MVA; 550 KV BIL for 30-MVA– WES, IGC, RPI & ORNL
- Low AC Loss Conductor and Winding Design – IGC & ORNL
- Bushing/Downlead Designs for High Voltage, Low Heat Leak – WES, IGC, & ORNL
- Monitoring and Control, Wireless Instrumentation – WES & IGC
- Cooling of Coils, Leads – IGC & ORNL
- Core Cooling – WES
- Winding Development – IGC
- Coil Support Structure, 80-K Shield, and Lead Cooling – IGC and ORNL

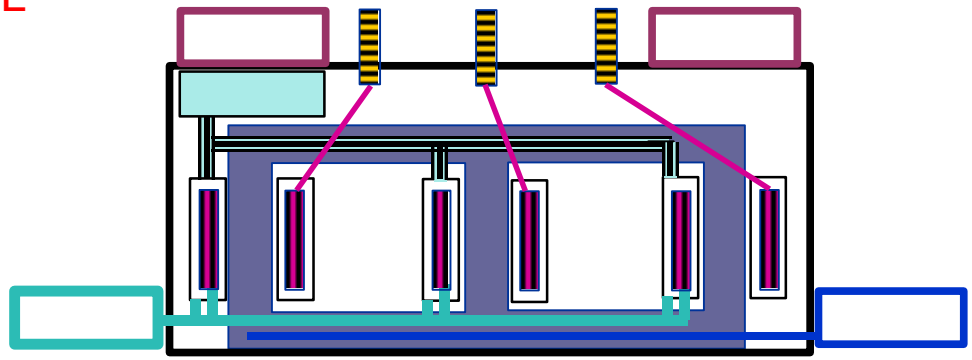

FY 2001 ORNL Plans
(from July, 2001 Peer Review)

- **Further collaboration on the 5/10-MVA design.**
- **Completion of 5/10-MVA cryogenic system design/fab/test activities.**
- **Conduct further ac loss tests.**
- **Conduct further high-voltage breakdown tests.**
- **Completion of HV bushing/downlead tests based on recently completed conceptual designs.**

Summary of ORNL Results This Year

- Design collaborations were focussed on the 5/10-MVA transformer.
- ORNL took a broad role in consultation on the overall 5/10-MVA design. Detailed analysis and design for the 5/10-MVA coil refrigeration system were completed and fabrication is well along.
- Further ac loss tests were performed on the third and fourth IGC sample coils, with Coil 4 similar in conductor and winding to 5/10-MVA coils.
- Dielectric breakdown and lifetime tests on solid materials and other high-voltage components addressed key design issues. Dielectric loss measurements were performed on solid materials using equipment on loan from WES.
- New Task— Vacuum outgassing tests were performed on warm high-voltage components, at request of WES.
- ORNL consulted on design of HV downleads and bushing connections.

ORNL consulted broadly in 5/10-MVA design and analysis.

- Jointly developed overall cooling system configuration with IGC.
- Performed independent heat transfer analysis on winding to verify IGC calculations.
- Reviewed overall layout and coil suspension design.
- Reviewed HV designs and component selections.
- Reviewed WES core cooling approach and verification tests.

Key Considerations for HTS Transformer Design

- **Design of transformers to operate at temperatures below 77 K** requires:**
  - **Special care in the design of windings for low ac losses. (RT refrigeration power is ~25 watts per watt at 77 K, but ~150 watts per watt at 20 K)**
  - **Design of the cooling system to remove those losses.**
- **This is especially the case for our HTS transformers which are designed to run for several days at up to 2X rated current, under emergency conditions, without loss of transformer life.**
- **High voltage design must lead to commercial BIL levels.**

****to allow best use of available conductor**

5/10 MVA Cooling System

- IGC and ORNL have collaborated closely through Phase I and now in Phase II to design and test a cooling system to serve:
  - The 5/10 MVA alpha prototype
  - The 30/60 MVA beta prototype
  - Commercial units of this and higher rating to follow
- The cooling system described here for the present Phase II 5/10 MVA Alpha prototype is expected to serve also for the higher-MVA transformers of 2nd generation superconductor to follow (as described in greater detail under the discussion of ac loss test results)

The Coil Refrigeration System is a Modular Unit That Plugs Into Top of 5/10-MVA Transformer.

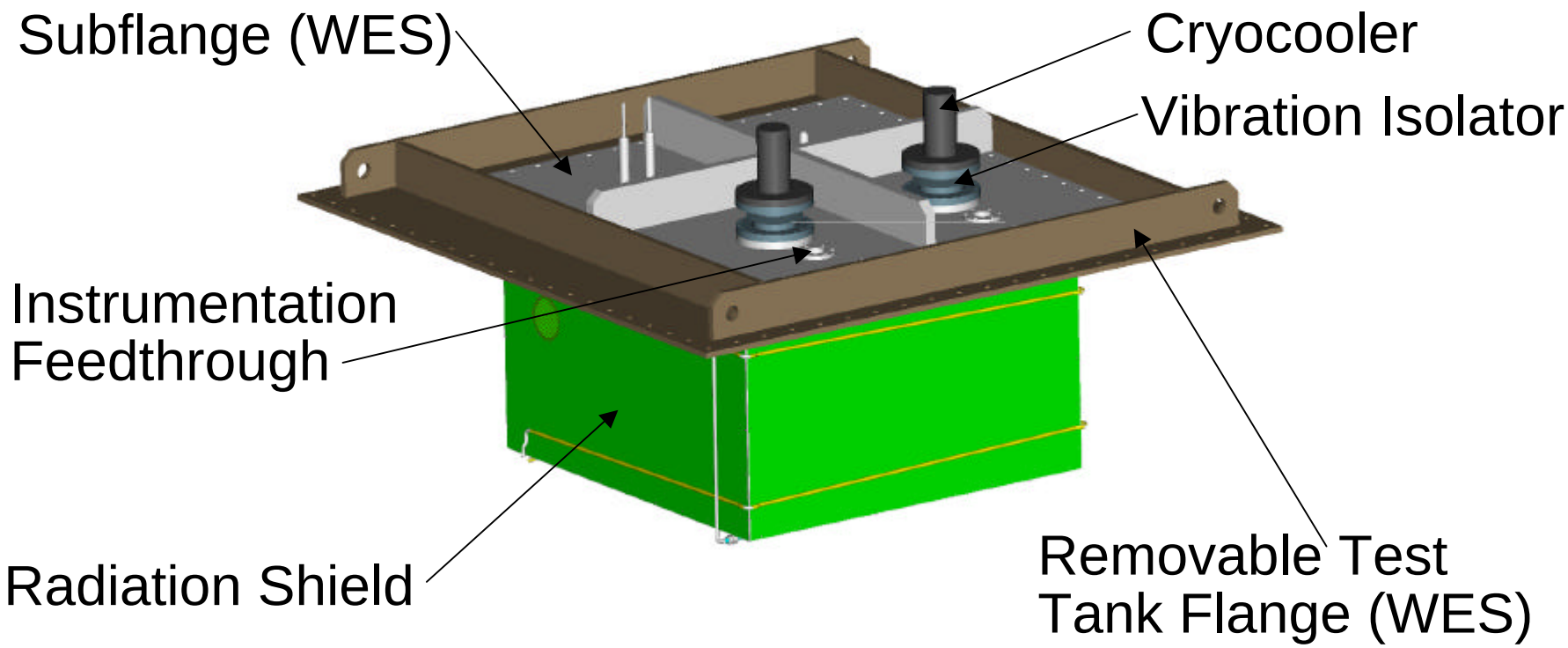

Design/Performance Highlights

- Cryocoolers are suspended on bellows & springs for vibration and thermal contraction.
- Electrically-heated Dummy Load hanging below thermal shield will simulate coils in proof test.
- 280-W cooling capacity delivered to coils.
- Designed for 3-g horizontal and 0.5-g vertical shipping/handling load.
- Cooling module installs easily in both test tank and 5/10-MVA transformer.

Elements of the Design Process

- Design is a scale-up of the system used on the 1-MVA transformer.
- ORNL analyzed the conceptual design with respect to heat transfer and stress.
- Detailed engineering was carried out using Pro-Engineer CAD package.
- ORNL design model plugs directly into the WES Pro-E model for the whole 5/10-MVA transformer.

The Cooling System Will Be Tested Separately Before Installation in 5/10-MVA Unit

- System will be mounted in WES Test Tank
- Minimum standby mode temperature determined
- Maximum temperature vs heater power corresponding to up to 1X rated operation
- Maximum temperature vs heater power corresponding to up to 2X rated operation
- Stability under non-uniform heating
- Tests with one cryocooler operating
- Tests with both cryocoolers operating

Cryogenic Dielectric Materials for HTS Transformers

- Desirable properties
  - High dielectric strength
  - Low partial discharge
  - Low dissipation factor
  - Thermal compatibility
  - Mechanical strength for solid materials
  - Thermal conduction
- Measurements underway
  - AC breakdown
  - Impulse breakdown
  - Partial discharge and aging
  - Dissipation factor
  - Thermal shock tests

Precooler and atmospheric pressure LN2 bath

HV Impulse Generator

HV AC Power Supply Controller

Dielectric Stress Points in HTS Transformer

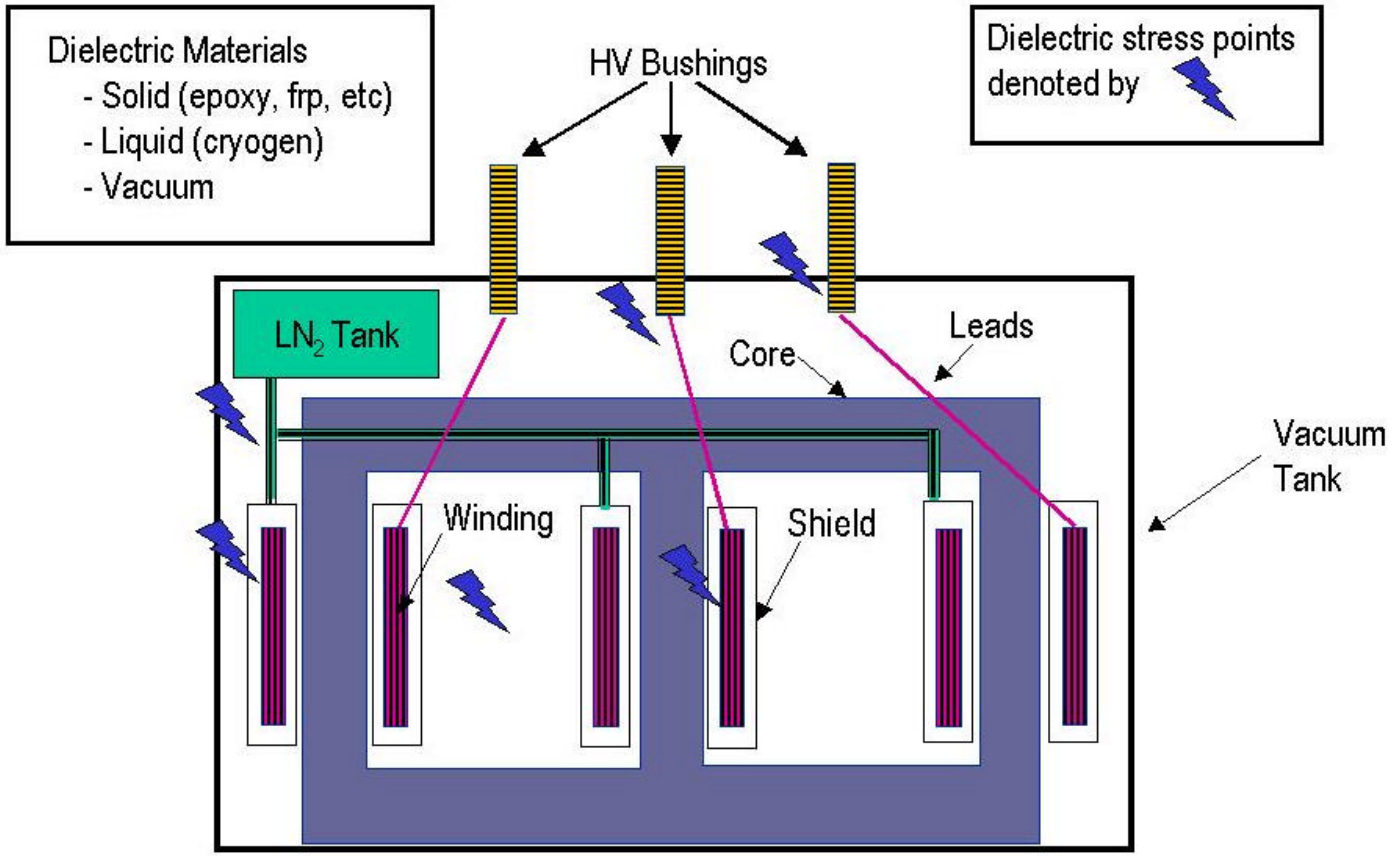

HV Breakdown in Solids for Plane-Plane Geometry

- Different epoxies and epoxy composites (i.e. combination of dielectric materials) are used at various places in the transformer.
- Tests are performed with:
  - Varied gap lengths
  - Data at room temp and LN2
  - Multiple samples for statistical data
- Weibull probability plots for multiple samples provide statistical information on breakdown distribution

Rig for making multiple epoxy test samples

Typical epoxy sample with embedded electrodes

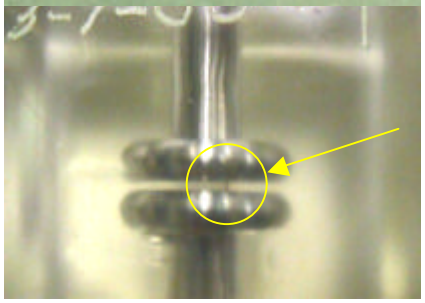

Closeup view showing arc track following breakdown

Establish Data Base for Epoxy BD at Low T - Typical Results

Breakdown Data in Epoxy under Uniform Field in LN2

Sample #	Medium	Breakdown Voltage (kV)
1	Air	37.00
2	LN2	38.00
3	LN2	57.00
4	LN2	48.00
5	LN2	55.00
6	LN2	74.00
Mean	LN2	54.40
STD	LN2	13.20
STD (%)	LN2	24.00
Low	LN2	38.00
High	LN2	74.00
Weibull (62.3%)	LN2	59.60

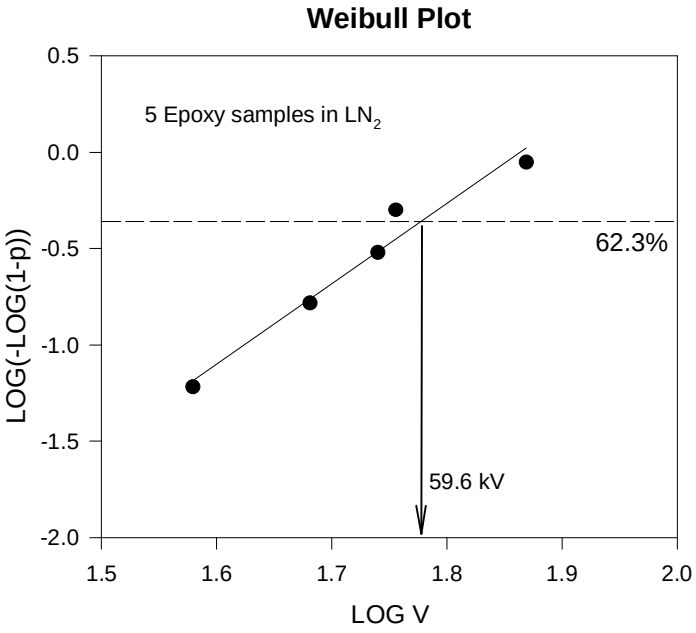

Ramp to breakdown at 1000 V/s

Plane-Plane electrode geometry, 1-mm gap

Successful HV Withstand Tests of Cast Epoxy Cylinder

- 1.5x Operating voltage for 4h: Passed
- 110% Operating voltage for 2 days: Passed
- 2x Operating voltage for 2 min: Passed
- After meeting the above tests, aging test performed

Long Term Aging of Epoxy Cylinder w/o Failure

- Two cast epoxy cylinders were made with practical electrode geometry and two different terminations
  - Cyl #1 with 2x field enhancement at termination)
  - Cyl #2 with 20% field enhancement at termination
- Cyl #2 ran at 2.5x operating voltage for 444 h (18.5 d) without failure (compared to cyl #1 which failed at 4.14 h)

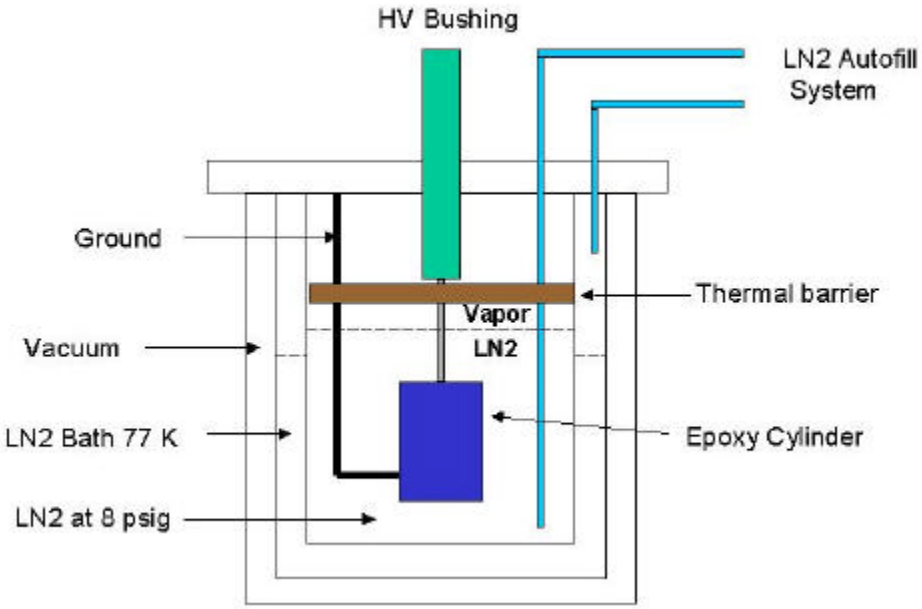

Aging Dewar

Successful Impulse Test of Cast Epoxy Cylinder

- Cast epoxy cylinder (cylinder #2) with cylindrical electrode geometry and other dielectric materials to simulate areas in HTS transformer was tested for HV impulse strength
- Test object was previously tested in aging experiment
- Breakdown occurred at 304 kV, ~15x operating field strength of transformer (starting at 50 kV, 3 shots at each voltage, 10 kV per step)
- Tests indicate puncture rather than flashover

cast epoxy cylinder mounted to top plate/bushing of HV cryostat

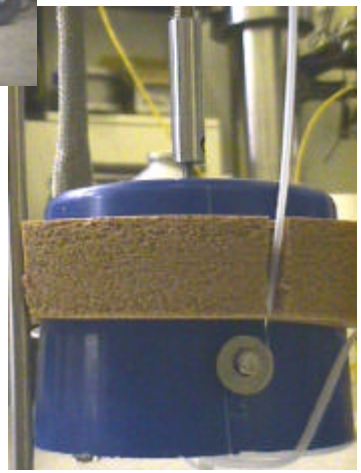

closeup of epoxy cylinder

Good Performance of Sensor Probe in HV Tests

- Temperature sensor needed to monitor the temperature of the windings
- Sensor probe tested at high voltage - AC and impulse at Temp = 77K
- 3 samples made and tested
- 2” gap: V_{ac} > 143 kVrms
- 1” gap: V_{ac} > 100 kVrms (flashover limited)
- 1” gap: $V_{impulse}$ = 213 kV (different sample)
- No flashover along the sensors were observed
- Results of HV tests were successful

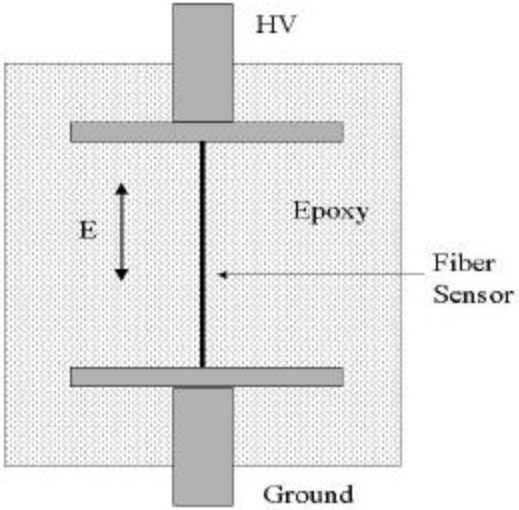

Test Sample

Dissipation Factor Improves Significantly at 77 K

- Measured dissipation factor (tan delta) and permittivity for several materials
  - fiberglass reinforced plastic, FRP (plane-plane)
  - various epoxy materials (plane-plane)
  - epoxy/FRP composite (cylindrical geometry)
- tan delta decreases by factor of 5-10 in LN2 from room temp

Test Sample	Dissipation Factor	
	298K	77K
Epoxy	.012	.0011
FRP	.013	.001
Cast Epoxy Cylinder	.0085	.0017

Tan Delta Measurements

Epoxy sample

Transformer ratio arm bridge

Conclusion: Dielectric dissipation losses will not be significant in the 5/10-MVA Transformer.

Reduced Partial Discharge in Voids at 77 K

- Bubbles (voids) can occur in cast epoxy leading to partial discharge and ultimately dielectric breakdown (an important aging mechanism)
- Studies currently in progress to control the number/size of voids in test samples
- Very little work available at low temperature where condensation can occur in a void leading to different PD patterns that are normally observed at room temp
- PD in voids at LN2 temperature markedly different from room temperature: Typical results shown below for 55 kVrms, 3.5-mm gap

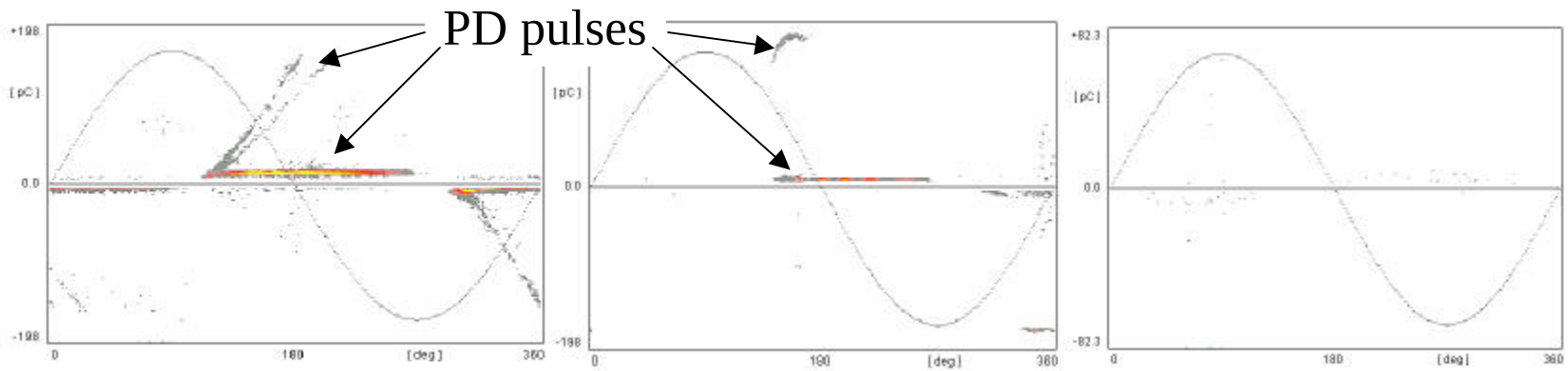

Void PD at Room Temp **Void PD in LN2** **PD w/o Void in LN2**

Low Outgassing of Commercial Components

- Outgassing of several commercial high voltage components to determine gas load on system and efficacy for use in HTS transformer (Note: Tests were not part of original work plan)
- All components tested performed well, pumping to < 1x 10^{-4} Torr

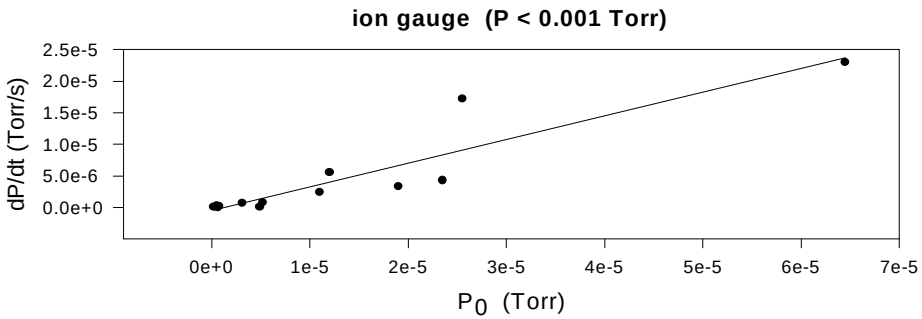

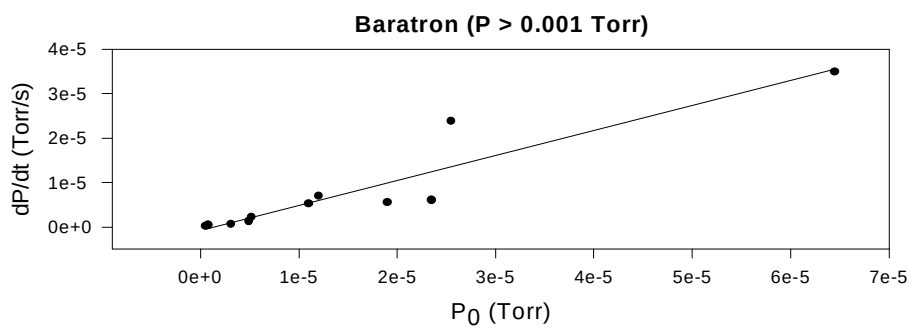

Data are shown for two pressure ranges showing relationship between the lowest pressure reached and the corresponding outgassing rate, dP/dt, in torr/s

AC Loss Measurements

- ORNL has assisted IGC throughout Phase I and now in the 5/10 MVA Phase II activity to evolve and test both theoretical ac loss models and low-loss winding configurations.
- Over a dozen test coils have been manufactured at IGC and tested mainly at ORNL (also some at BNL). We report here on the Phase II activity.
- Results have facilitated both economical design of the 5/10 MVA transformer for low losses and refrigeration, and the projection of design and economics for the eventual 30/60 MVA and higher-MVA commercial units.

Four Test Coil Sets Provided by IGC-SuperPower Have Been Tested in Phase II

- Primary & secondary coils reproduce transformer geometry.
- Gap between coils is similar to full-size unit.
- Windings have IGC-SuperPower proprietary ac loss reduction features.
- 20 to 40 turns per coil.
- Both Bi-2212 and Bi-2223 conductors have been investigated.
- Instrumented with heater, voltage taps and carbon resistance thermometers.
- **Fourth coil has actual 5/10-MVA conductor and winding configuration.**

Summary of AC Loss Test Coil Sets

Coil Set	Conductor	Winding Configuration
1	Bi-2212	1
2	Bi-2223	2
3	Bi-2223	1
4	Actual 5/10-MVA material	As for 5/10 MVA

AC Loss Tests are Made Calorimetrically

- Test coil hangs in vacuum with good thermal isolation.
- Data near 20 K, 30 K, and 40 K. Loss sensitivity <0.1 W.
- Calorimetric measurement avoids the influence of the metal dewar.
- Heating rates on thermometers are observed with 10-sec ac pulses.
- Short pulses limit T drift and give losses on individual turns (difficult with electrical measurement).
- Calibration by comparison of ac data with heating rates for known dc heat inputs to heater.

Temperature Sensor Voltage Changes From AC Current Pulses Are Compared With Calibration Pulses To Determine Losses.

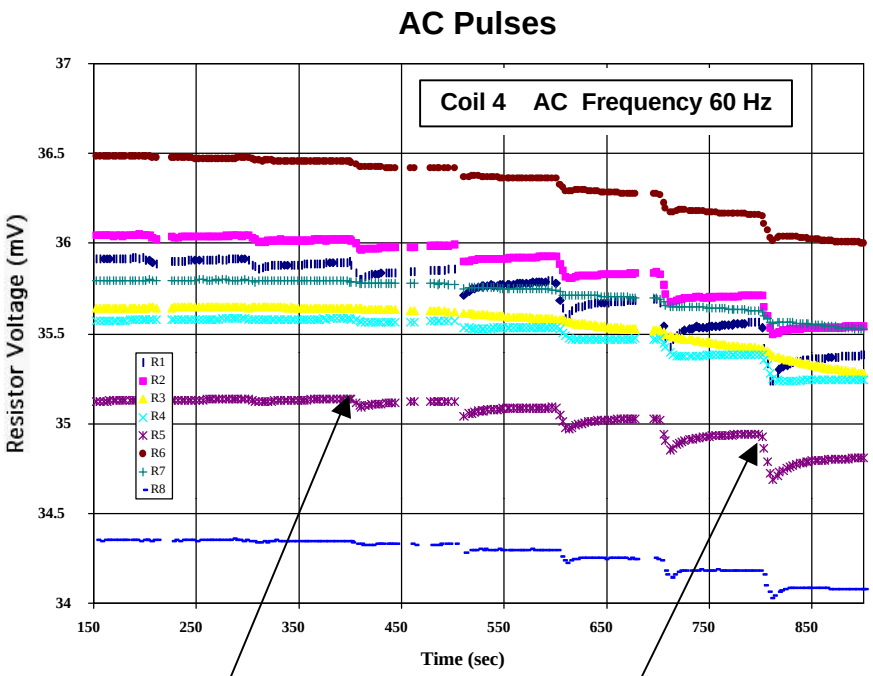

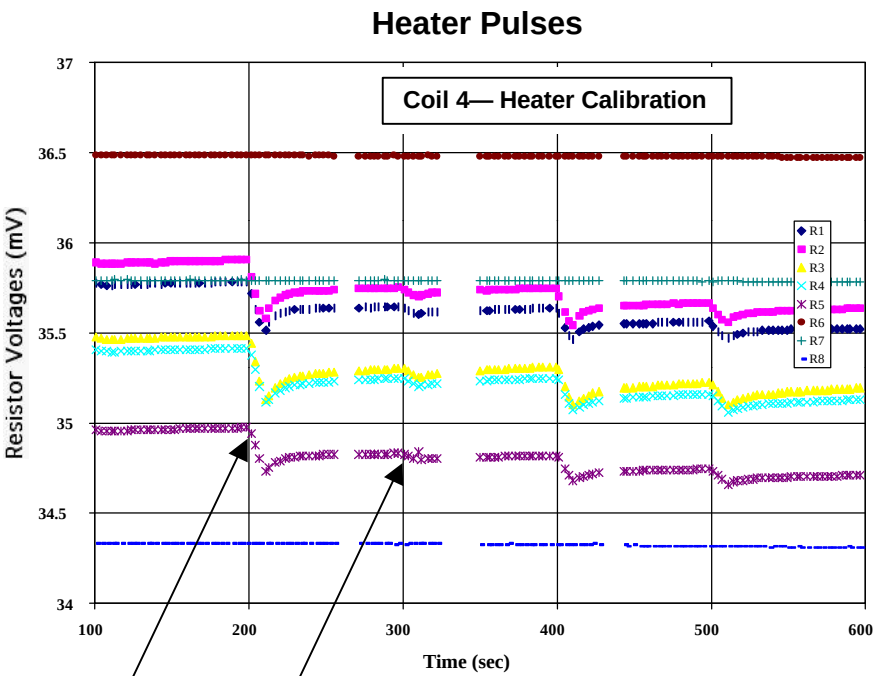

108 A 188 A Highest Power Lowest Power

AC Losses Depend Strongly on Position in Coil.

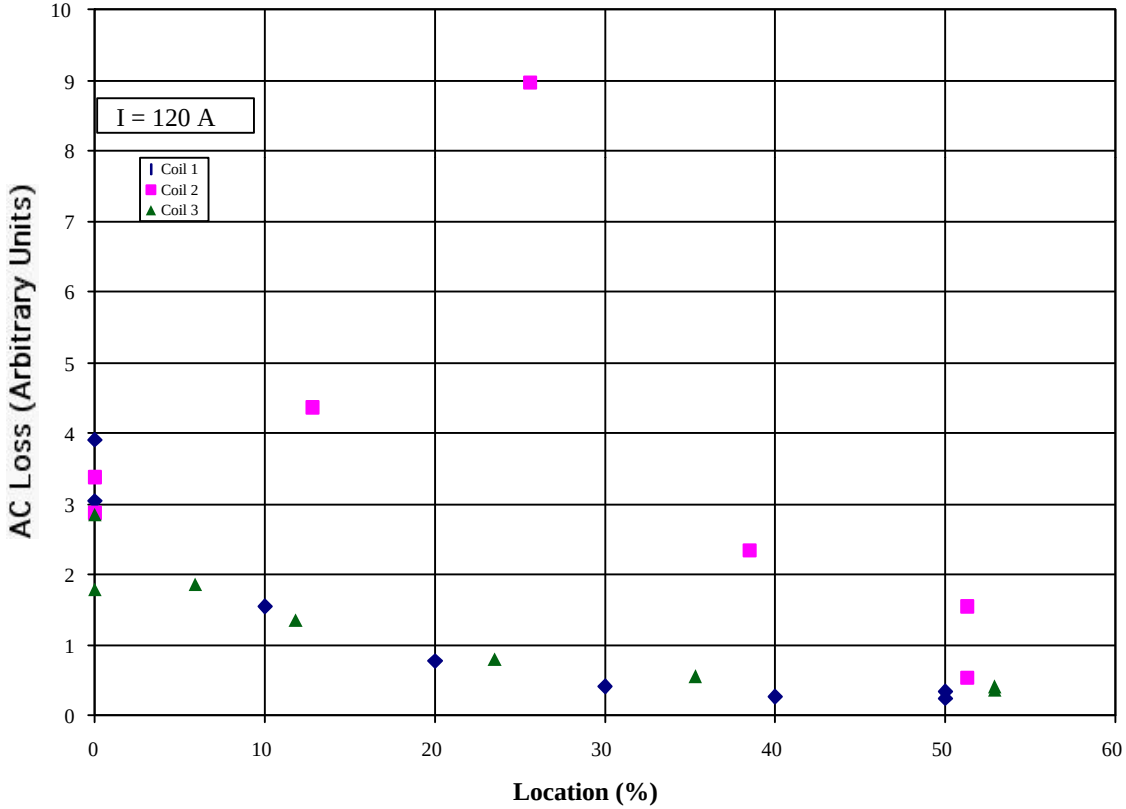

Effect of Frequency on Losses Has Been Determined for Coil Set 4.

- Variac driving current step-up transformer was replaced by a Behlman variable-frequency supply.
- Frequency range 45 Hz – 240 Hz.
- Currents up to 120 A (2X rating) were achieved.
- 10-sec current pulses used.
- The measured variation of ac losses with frequency gave information about the loss mechanisms.

Losses in Coil 4 Are Roughly Linear with Frequency at All Locations.

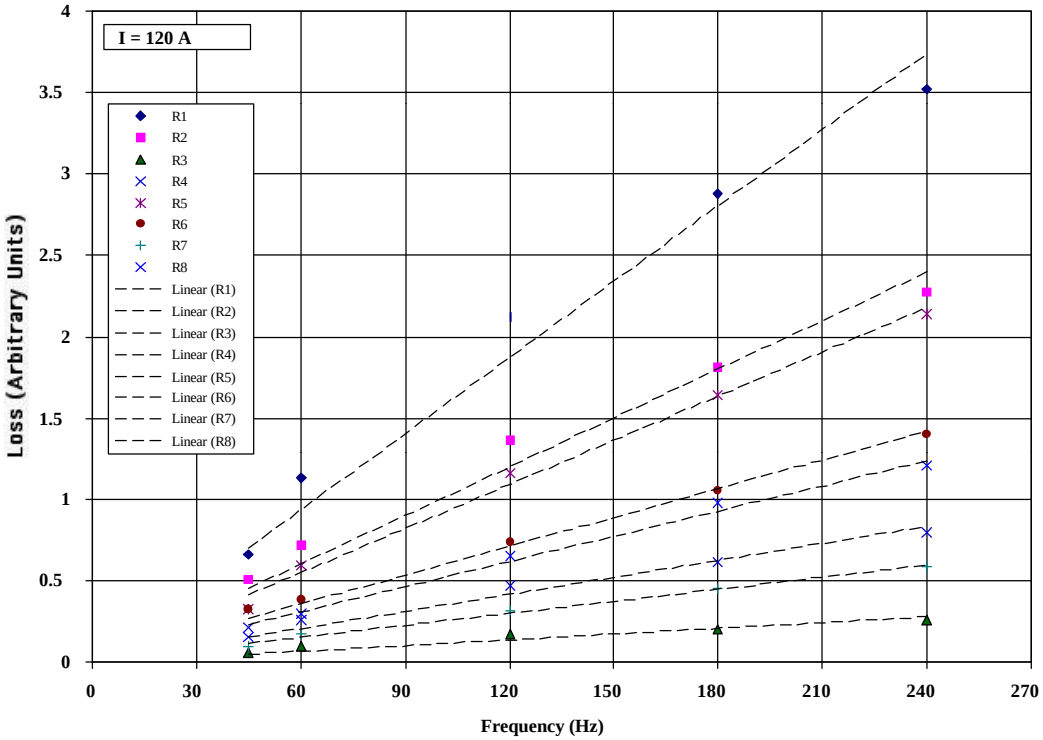

ORNL AC Loss Tests Have Validated IGC's Low AC Loss Designs

- Losses are concentrated at ends of winding, as expected.
- A generally linear frequency dependence of the ac losses is observed, suggesting that hysteresis is the main loss mechanism.
- Losses anticipated for the 5/10 MVA Transformer have been confirmed in Coil Set 4, which has a similar conductor and winding configuration.
- These test results have also provided generic information that allows projection of losses to second generation conductor and higher-MVA transformers.

FY 2001 Plans

- Participate in 5/10 MVA design.
- Design and fabricate key elements of 5/10-MVA cooling system.

FY 2001 Performance

- ✓ ORNL took a broad consulting role in 5/10-MVA design and analysis.
  - ✓ Jointly developed cooling system configuration with IGC.
  - ✓ Performed independent heat transfer analysis to verify IGC calculations.
  - ✓ Reviewed overall layout and coil suspension design.
  - ✓ Reviewed HV designs and component selections.
- ✓ Detailed engineering design is complete and fabrication is well along.
  - ✓ Pro-E CAD used for Cryocooler/coil coupling, shield, instrumentation, assembly on WES sub-plate.
  - ✓ Fabrication and assembly in outside shops.

FY 2001 Plans

- Carry out high-voltage insulation tests.
- Carry out ac loss tests.
- Carry out bushing/downlead development.

FY 2001 Performance

- ✓ AC breakdown, lifetime, tan , and impulse tests on epoxies showed good performance.
- ✓ 3rd & 4th Coil Sets tested in cryo-cooled test rig. Variable frequency tests on Coil 4 showed roughly linear frequency dependence.
- ✓ ORNL verified acceptable outgassing levels on conventional HV lead/bushing components and contributed to IGC cryogenic downlead designs.

ORNL's FY 2002 Plans Include:

- Completion and test of the 5/10-MVA cooling system.
- Participate in assembly, commissioning, and test of the 5/10-MVA transformer at the WES plant.
- Carry out ac loss and critical current tests on coated-conductor YBCO coils as they become available.
- Continue high-voltage insulation tests, with focus on 550-kV BIL applications.
- Conduct fault current tests when IGC sample coils become available.

Research Integration

- ORNL, WES, IGC, and RG&E form a strong research, engineering & manufacturing team with complementary capabilities.
  - Consultants— RPI, Advanced Energy analysis, Applied Cryogenics Technology
- In FY 2001, ORNL participated in 3 major team meetings at WES and IGC, and made or hosted five other individual visits.
- All partners are now working on final design and fabrication for the 5/10-MVA transformer.
- Design uses as many standard industrial components as possible.
- Many outside shops are being used for fabrication.
- Verification tests on materials and components are continuing at ORNL and WES, with input from IGC.
  - ORNL performed outgassing tests for WES on short notice.
  - Tan Δ bridge was loaned to ORNL by WES.
- WES and ORNL personnel serve on several industrial standards committees, as well as IEEE committees and editorial boards.

Integrated Team Effort is Reflected in the 5/10-MVA Design

- Specifications, Objectives - RG&E, WES, IGC, ORNL
- Transients, Dielectric design – to 150 kV BIL for 5-MVA; 550 KV BIL for 30-MVA– WES, IGC, RPI & ORNL
- Low AC Loss Conductor and Winding Design – IGC & ORNL
- Bushing/Downlead Designs for High Voltage, Low Heat Leak– WES, IGC, & ORNL
- Monitoring and Control, Wireless Instrumentation – WES & IGC
- Cooling of Coils, Leads – IGC & ORNL
- Core Cooling – WES
- Winding Development – IGC
- Coil Support Structure, 80-K Shield, and Lead Cooling – IGC and ORNL

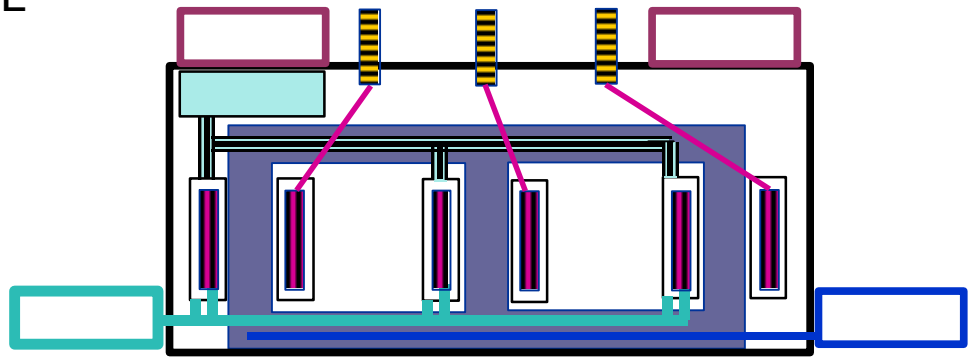

Joint Presentations and Media Coverage

- Presentations:
  - September, 2000— Applied Superconductivity Conference
  - October, 2000— Waukesha Electric Industry Training Seminars
  - January, 2001— IEEE PES Winter Power Meeting
  - June, 2001— ISTEC-MRS Workshop on Superconductivity
- Joint Technical Papers:
  - June, 2001— IEEE Transactions on Applied SC
- Project is covered in articles in the following journals:
  - September/October, 2000— Public Power
  - October, 2000— ET Currents
  - March, 2001— The Energy Daily
  - June, 2001— Mechanical Engineering
- ORNL Web Site— www.ornl.gov/fed/Technology/supmag/magsup.html

ORNL Continues to Support the Team in Long-Term HTS Transformer Development.