TRADE STUDY FOR INTEGRATING NUMEROUS SECA SOFC MODULES

B. Ozpineci, L. M. Tolbert, and D. J. Adams
Oak Ridge National Laboratory

INTRODUCTION

Under the Department of Energy's Solid State Energy Conversion Alliance program, solid oxide fuel cell (SOFC) modules are being developed in the 3–10 kW range for residential applications. For applications requiring higher power than 10 kW, several modules can be connected, e.g., 25 10-kW modules for a 250-kW hospital. This study proposes ways to connect numerous fuel cell modules using power electronics converters.

TASKS ACCOMPLISHED

A literature review was conducted for fuel cells, their characteristics, models, and power converter interfaces for fuel cells with an emphasis on SOFCs. This review also included the ganging of multiple energy sources using power converters; however, only a few publications on this latter subject were found.

To integrate numerous SOFC modules, five different approaches are proposed in this report: series, multilevel, cascaded multilevel, dc distribution, and high-frequency ac (hfac) distribution. Each of these configurations will be described in the following subsections.

A. Series configuration: The simplest way of integrating fuel cells is to connect them in series and feed the output to a power converter as shown in Fig. 1.

The power converter consists of a dc-dc voltage regulator and an inverter. The reason for the voltage regulator is that the fuel cell output voltage decreases with increasing current, but a dc-dc voltage regulator maintains a stiff dc link voltage for the inverter input (Fig. 2). Depending on how many fuel cell modules are connected in series, this regulator can be of the buck or boost type. Moreover, it can be of the high-frequency link type or chopper type.

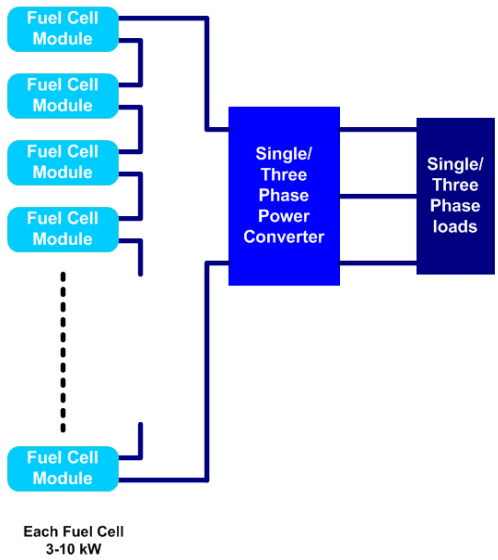

Fig. 1. Block diagram of the series configuration.

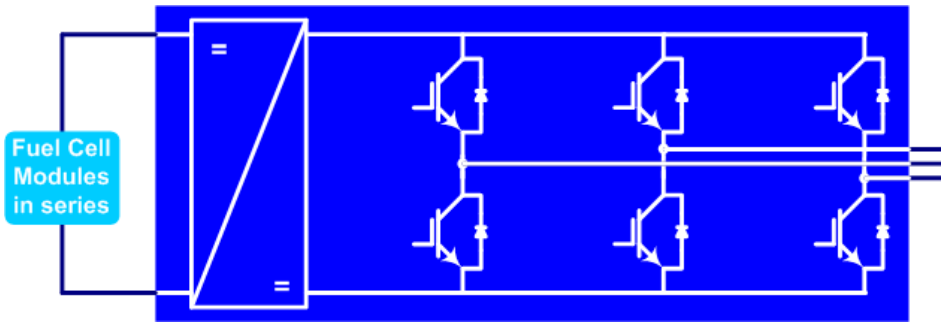

Fig. 2. Dc/dc voltage regulator and a three-phase inverter.

B. Cascaded multilevel configuration: Another approach is to couple each fuel cell module with its own power converter module, as shown in Fig. 3, and connect the power converter outputs in series. The power converter module consists of a voltage regulator and a single-phase H-bridge inverter. This configuration is similar to the cascaded multilevel inverter shown in Fig. 4.

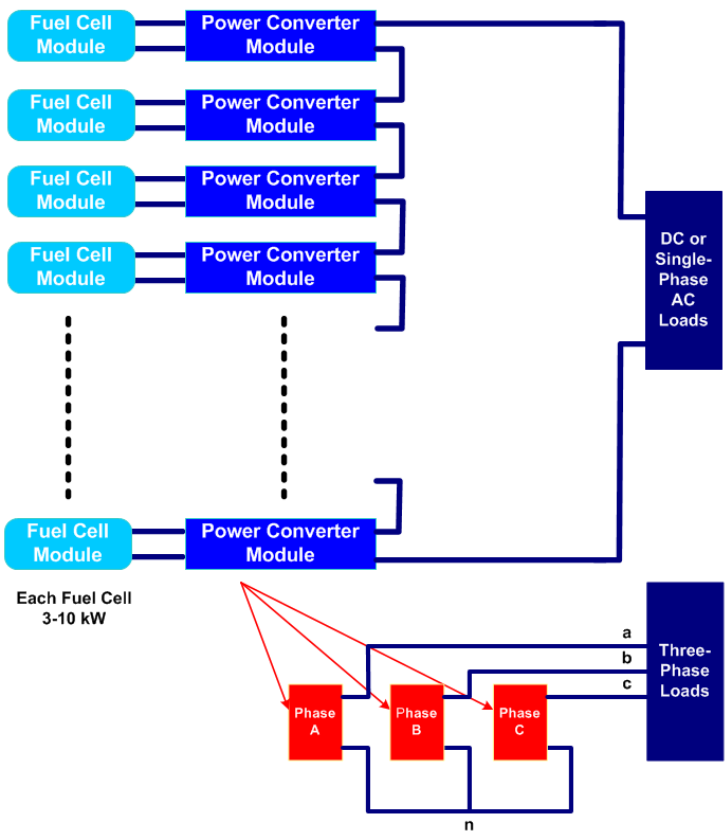

Fig. 3. Block diagram of the cascaded multilevel configuration.

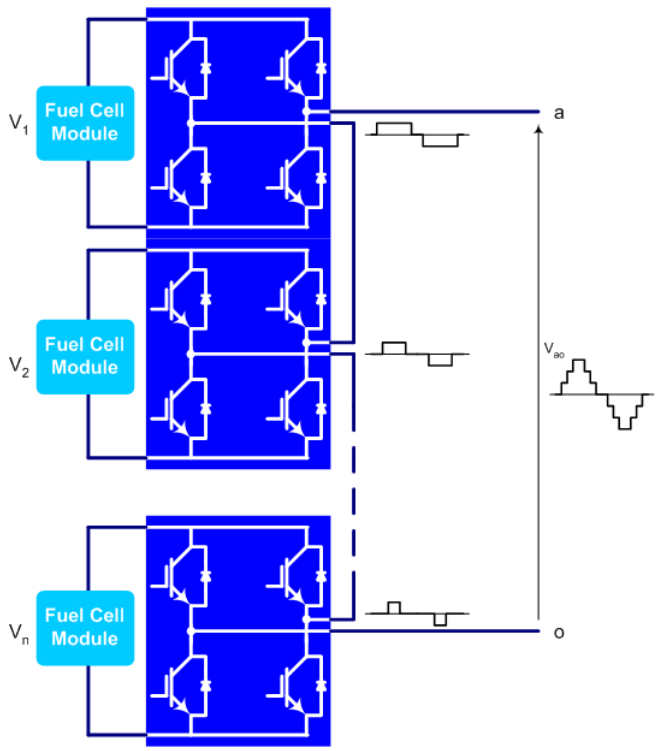

Fig. 4. One phase of a cascaded multilevel inverter.

Each fuel cell and power converter module produces a single-phase three-level ac voltage, as shown in Fig. 5. These voltages are added in series to form a single-phase multilevel output voltage. Three of these single-phase voltages can be connected to form a three-phase supply (Fig. 3).

The voltage regulator can be eliminated if the multilevel inverter control senses the voltages and operates the power converters accordingly.

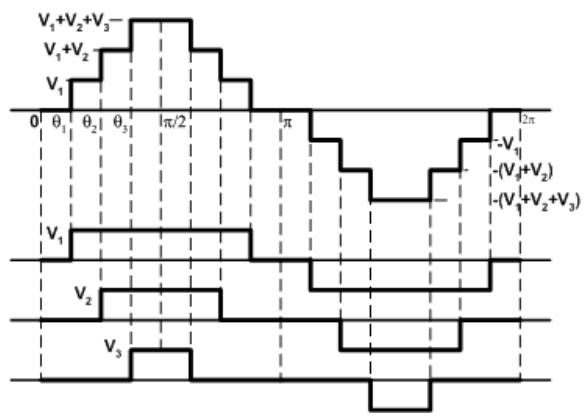

Fig. 5. One phase of a cascaded multilevel inverter.

C. Multilevel configuration: Similar to the cascaded multilevel converter configuration, SOFCs can be connected to one single-phase/three-phase multilevel inverter as shown in Fig. 6. In this case, there might not be a need for a voltage regulator, as in approaches A and B, if the multilevel inverter control senses the fuel cell voltages at all times.

There are many types of multilevel inverters. One typical type, the diode clamped multilevel inverter, is shown in Fig. 7 with four fuel cell modules.

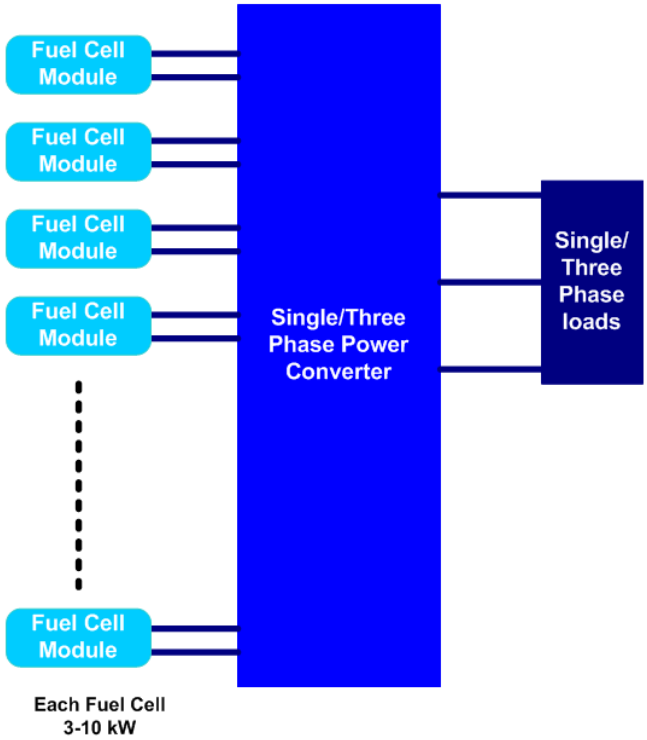

Fig. 6. Block diagram of the multilevel configuration.

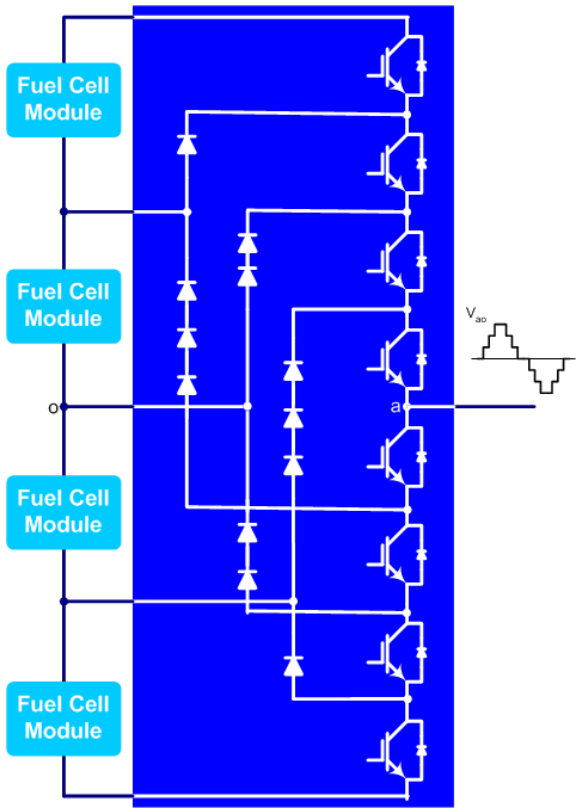

Fig. 7. One phase of a diode clamped multilevel inverter.

D. dc distribution configuration: In this configuration, as in the cascaded multilevel case, each fuel cell module has its own power converter module; however, unlike in that case, each power converter is a dc-dc converter and their outputs are connected in parallel instead of series (Fig. 8). These dc-dc converters have to be of the boost type since the fuel cell module voltage will typically be less than the dc distribution/link voltage.

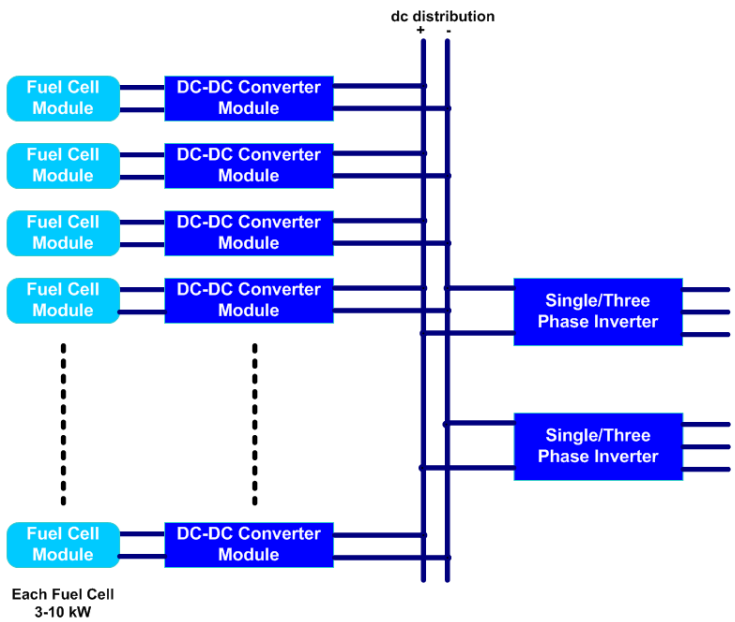

Fig. 8. Block diagram of the dc distribution configuration.

The advantage of dc distribution is that other power sources or loads can be connected to the dc link through a power converter without disturbing the rest of the system. However, connecting power converters in parallel causes problems with circulating currents that need to be carefully addressed.

E. hfac distribution configuration: In this approach, each fuel cell is connected to an H-bridge inverter, which converts the dc input to hfac voltage, typically at more than 20 kHz (Fig. 9). Each fuel cell and dc-hfac inverter module is connected to a transformer primary tap. The transformer boosts the input voltage and feeds single-phase to single-phase/three-phase power converters.

The transformer brings the advantages of isolation, voltage boost, and the capability of adding other power sources and loads through a power converter. Additionally, because of the high frequency, it is much smaller than a utility frequency transformer. However, it also has the disadvantages of higher expense and the possibility of saturation.

The power converter in the secondary of the transformer can either be a single-phase to three-phase cycloconverter or a rectifier and a three-phase inverter.

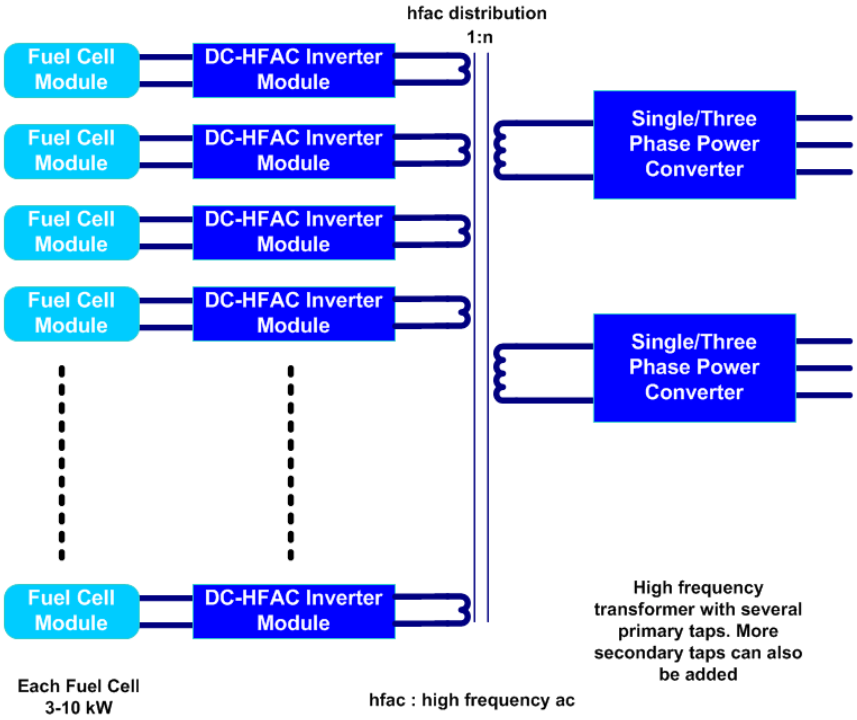

Fig. 9. Block diagram of the hfac distribution configuration.

FUTURE WORK

The five configurations described will be evaluated for

- relative cost (capital and operating),
- control complexity and stability (ease of operation and customization),
- reliability,
- maintainability and availability (at power system and device levels),
- service life,
- fault tolerance,
- modularity (ability to accommodate isolation of portions of system for service or addition of generation capacity while other portions of complete system continue functioning),
- energy conversion efficiency,
- cooling system cost and energy consumption,
- impact of trends in power device developments (benefits of new devices in the research and development pipeline), and
- ease of mass customization to enable mass production to drive down costs.