ICRF Antenna R&D Summary*

David W. Swain

Oak Ridge National Laboratory, Oak Ridge, TN, USA

Workshop on Outstanding Issues in ICRF Technology

Oxnard, CA

May 9 –10, 2001

* This research was sponsored by the Office of Fusion Energy, U. S. Department of Energy, under contract DE-AC05-00OR22725 with Oak Ridge National Laboratory managed by UT-Battelle.

This talk summarizes antenna R&D

Many thanks to colleagues who have contributed:

From Japan – S. Moriyama, T. Seki

From EU – B. Beaumont, R. Koch, G. Bosia, R. Maggiora, J. Heikkinen

From US – R. Goulding, W. Baity, R. Callis

From Korea – B. Hong

No original work of mine in this report, just a summary of information others have provided.

Please forgive errors, omissions, mis-statements, ….

LHD folded waveguide

Folded waveguide now installed in LHD.

First test of folded waveguide in the presence of real plasma.

Tests with plasma have started.

f = 27 MHz

P ≈ 2 MW

LHD combline

Testing combline for use on LHD

- 70 – 80 MHz passband
- 10 elements
- 2 rows stacked poloidally
- Center grounded

Electrical tests now being carried out with U. Tokyo.

Combline development in collaboration with General Atomics.

Drawing of 4-element prototype

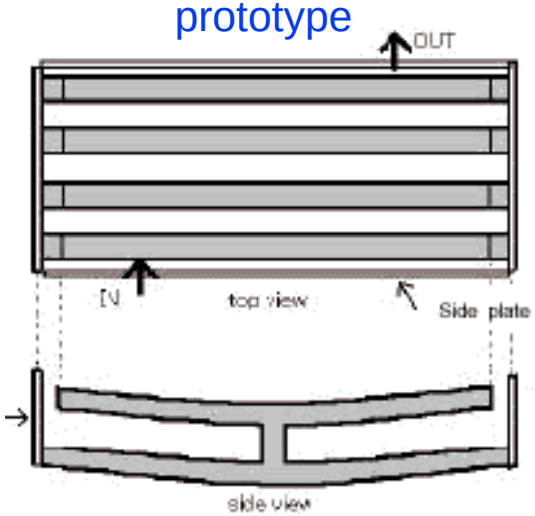

Drawing of 10-element combline in LHD

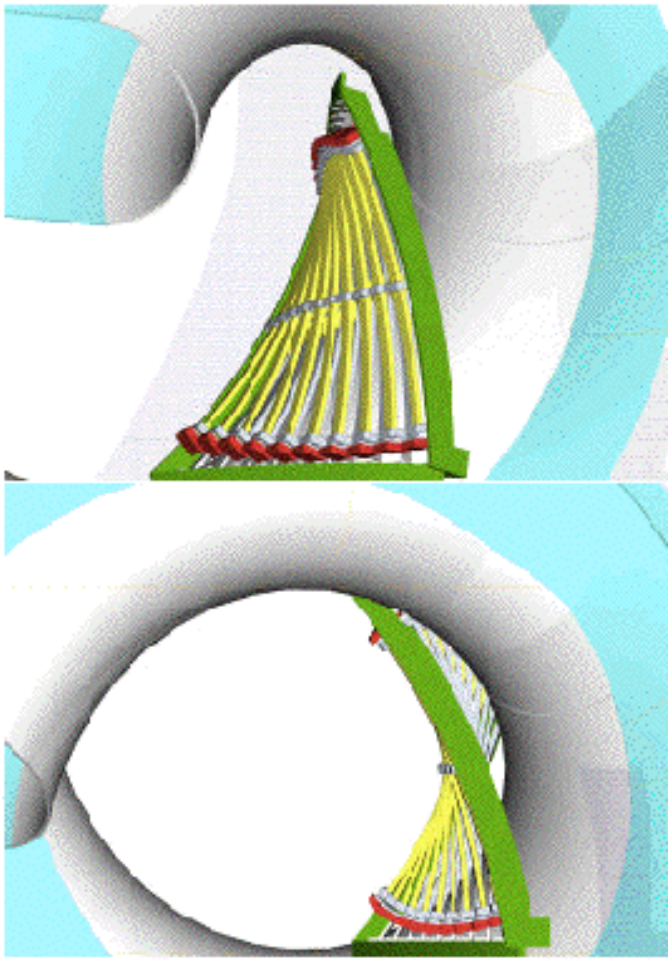

JT-60 antenna coupling experiments

Goal is to increase antenna loading, thereby delivering more power for the same antenna voltage and current.

Two techniques have been investigated:

- H_2 gas puff to increase edge density
  - Loading increases ≈ 15% for 10-cm gap

Results of gas puff experiment

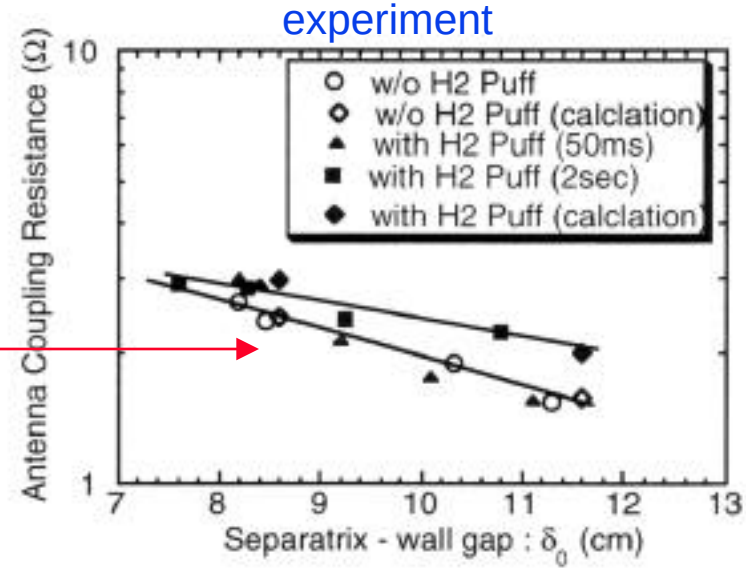

- ECH resonant outside main plasma on high-field side
  - P_{ECH} = 0.7 – 1 MW
  - Increases ICRF antenna loading by ≈ 20%

Diagram of ECH experiment

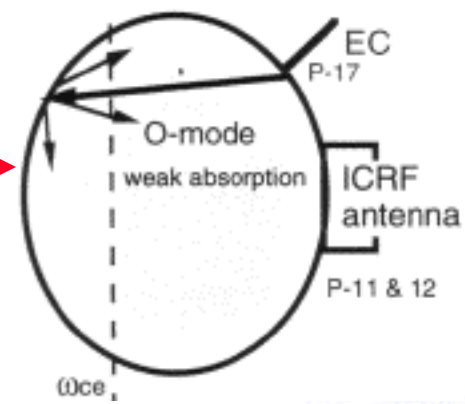

Improved all-metal support (JA ITER R&D)

Cylinder -type AMS

- Improvement over earlier "mushroom-type" AMS
- Improved mechanical strength
  - Supported from two directions
  - Column can be hollow
- Easy to fabricate
  - All parts cylindrical
- Resonance frequency suitable for ITER requirements

Cylindrical all-metal support

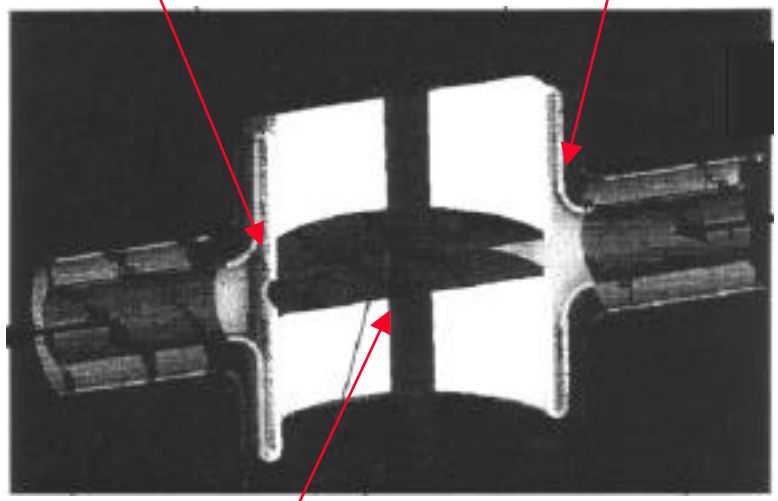

Coaxial gate valve (JA ITER R&D)

Use older mushroom-type AMS to provide a gate valve near antenna

- Required in rf system as tritium barrier
- Firm and reliable gate valve can be realized using AMS

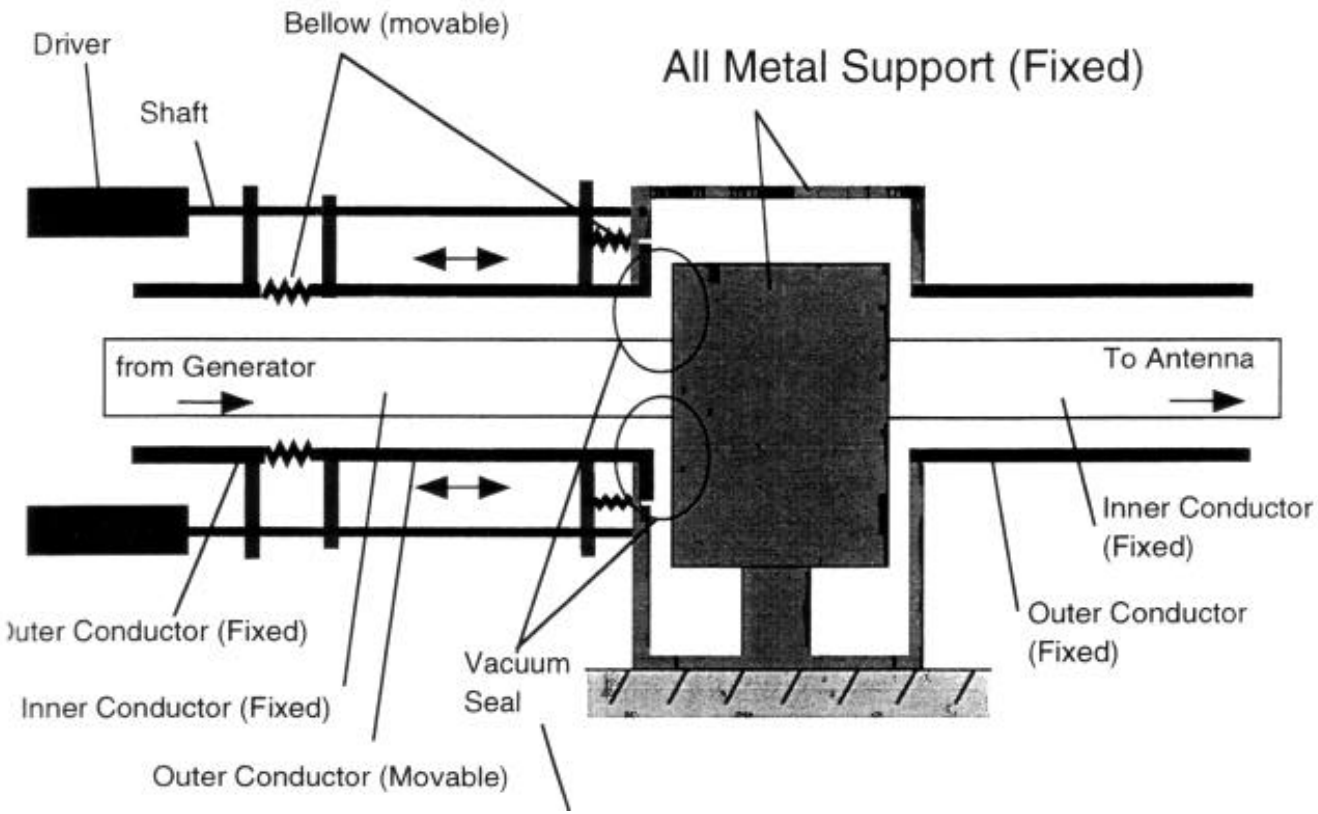

Improved vacuum window (EU ITER R&D)

Goal is to develop a very reliable, low failure rate component

- Capable of high voltage operation (50 kV)
- Suitable for remote handling
- Operate in a neutron radiation field.

Design: studied electric field, temperature distribution, and thermal stresses for irradiated and un-irradiated beryllia (BeO) and alumina (Al_2O_3).

BeO selected for construction because of

- better radiation resistance
- higher conductivity

Ti as metallic material for similar thermal expansion coefficient.

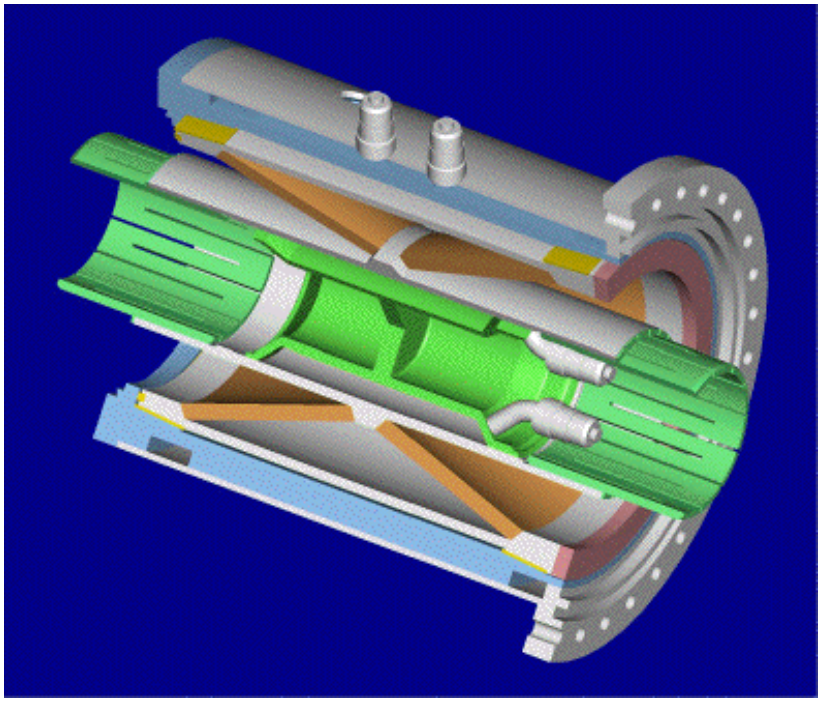

Test assemblies produced.

- Brazing successful in half-size mockup.
- Cracks found on full-size pre-prototype.

More reliable capacitors (EU R&D for JET-EP antenna)

Goal is to improve capacitor reliability, pulse length,…

Table 1 - Design Parameters of the Prototype Vacuum Capacitors

Capacitance range (pF)	40-400
Operating temperature range (^{o}C)	40-60
Operating pressure of cooling system (bar)	3 bar (abs)
Maximum peak RF voltage over the whole bandwidth (kV)	33
Maximum peak RF current over the whole bandwidth (kA)	1.3
Maximum pulse length (sec)	20
Maximum duty cycle	0.03
Number of axial full-stroke cycles	5,000
tan δ	~ 10^{-3}
Maximum stray inductance (nH)	< 60 nH

Contract with Comet for test capacitors.

Preliminary tests have been carried out

Destructive tests have been performed on 2 bellows : 100% stroke and 3 bar gauge pressure give a lifetime of 11500 and 11504 cycles. Significant lifetime improvement over Cu bellows used in present production capacitors.

Cu-plated s. steel bellows undergoing fatigue tests

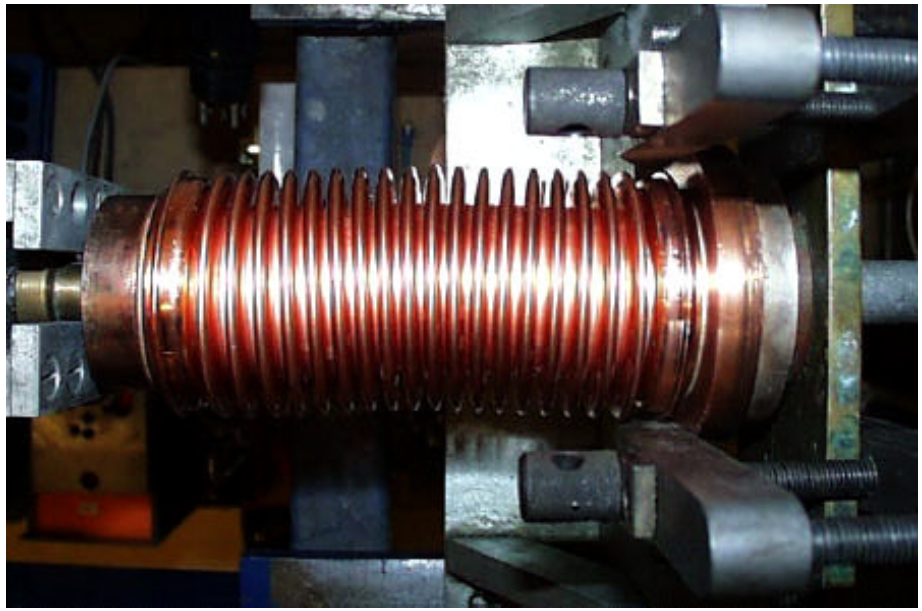

First capacitors will be delivered this summer to Cadarache for “killer” testing.

Prototype sliding tuners (EU ITER R&D)

Goal is to provide a robust structure for supporting and tuning ITER RDL-type antenna.

- Fulfil the RF impedance range requirements on the whole frequency band limited mechanical size as the tuners must fit in the available space and avoid critical mechanical constraints due to electromagnetic load.
- Develop high RF current sliding contacts. The impedance range is obtained by moving a short-circuit assembly, which require the availability of high RF current sliding contacts reliably operating under vacuum

Total mechanical length (mm)	1800
Minimum stub length (mm)	50
Maximum stub length (mm)	800
Inner diameter at short circuit (mm)	190
Outer diameter at short circuit (mm)	220
Matching range	TBD
Operation at max. performances	Continuous
Standing voltage in vacuum (kV)	50
Max. short circuit current (kA)	4

Contract (to be?) let to industry to supply tuner.

Tuner will be built, low-power and high-power tests are scheduled to be carried out at Cadarache.

JET-EP antenna

Goals:

- Test possible ITER-type antenna in JET.
- Improve power-handling capability.

Design concept:

- Internally-matched “inverse RDL” approach for low voltages in vacuum transmission line (present baseline design).
- Low-Z vacuum transformer to minimize excursions in reflected power caused by ELMs or other plasma loading changes.

Status:

- Conceptual design underway.
- Prototype capacitors and feedthroughs being readied for tests.
- US will build high-power prototype for testing in vacuum (early 2003, 1/4 of entire antenna).
- EU plan to install full antenna in JET early 2004.

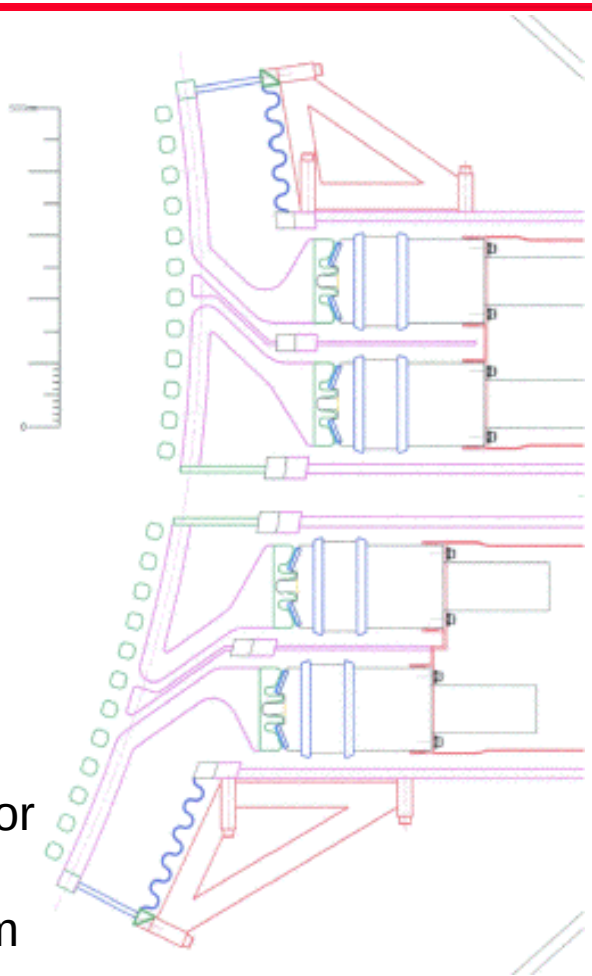

High-voltage breakdown experiments (joint IPP-ORNL R&D)

It's often the maximum voltage that antenna or vacuum transmission line can hold off before breaking down.

ORNL and IPP have started a collaborative program to study fundamental rf breakdown.

The goals of this study are to:

- Understand factors that limit rf voltage holdoff in the presence of plasmas
- Increase the voltage limits seen in present-day rf systems

Plan:

- Use a common geometry for tests - "High Voltage Tester"
  - Controlled geometry for well-known electric fields
  - Capability to easily alter test materials, geometry, and environment
- Carry out high-voltage breakdown tests at ORNL on mini-RFTF device
- Carry out similar tests at IPP on vacuum test stand
- Test the same electrode geometry exposed to the ASDEX-U plasma

What do we plan to study?

- Effects on RF breakdown voltage of
  - gas pressure
  - material, material preparation, material coating
  - plasma density
  - magnetic field
  - UV radiation level

- Effect on breakdown voltage of gas adsorption and plasma exposure
- Breakdown voltage with and without conditioning
- Effects on conditioning speed of
  - turnoff delay
  - pulse length
  - rep rate

- Paschen (pd) dependence at high voltages?
- Optimum Z_0 for coaxial vacuum line (radius of curvature vs. gap)

- Effect on breakdown voltage of exposure to tokamak plasma environment

Ultimate test will be on ASDEX-U

- Test line uses modified fixture originally built for materials studies
- Breakdown voltage of simple electrode geometries will be tested in first wall environment
- Gate valve allows electrodes to be interchanged and baked without breaking vacuum in main vessel
- Can also be used for RF/edge plasma interaction studies

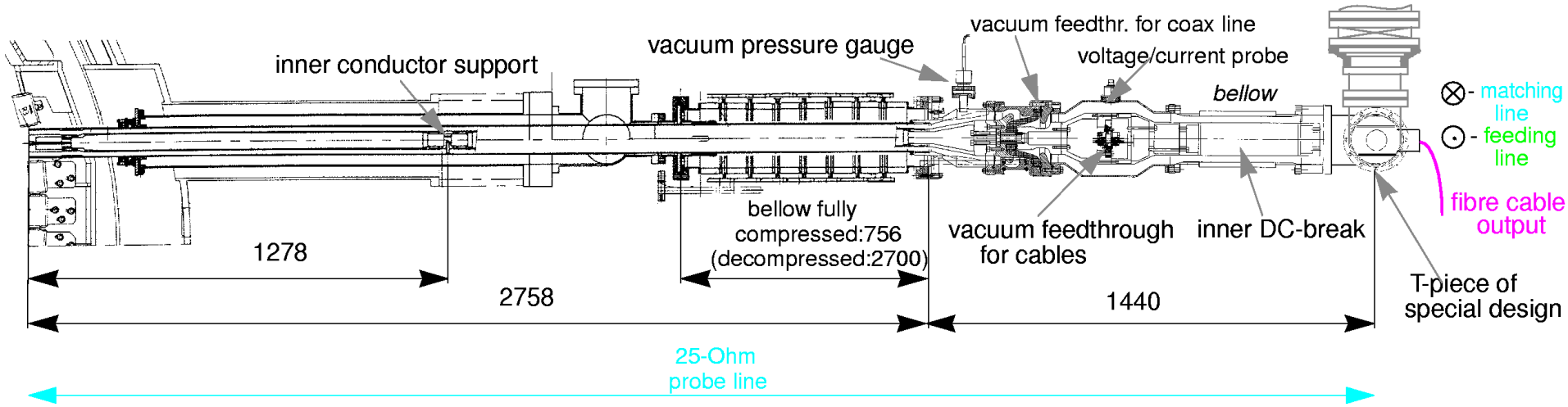

Arc localization R&D (US)

Goal: Determine location of arcs in rf systems by looking at characteristics of (low-power) high-frequency waves launched along transmission line that also carries high-power rf.

Swept frequency arc localization test rig

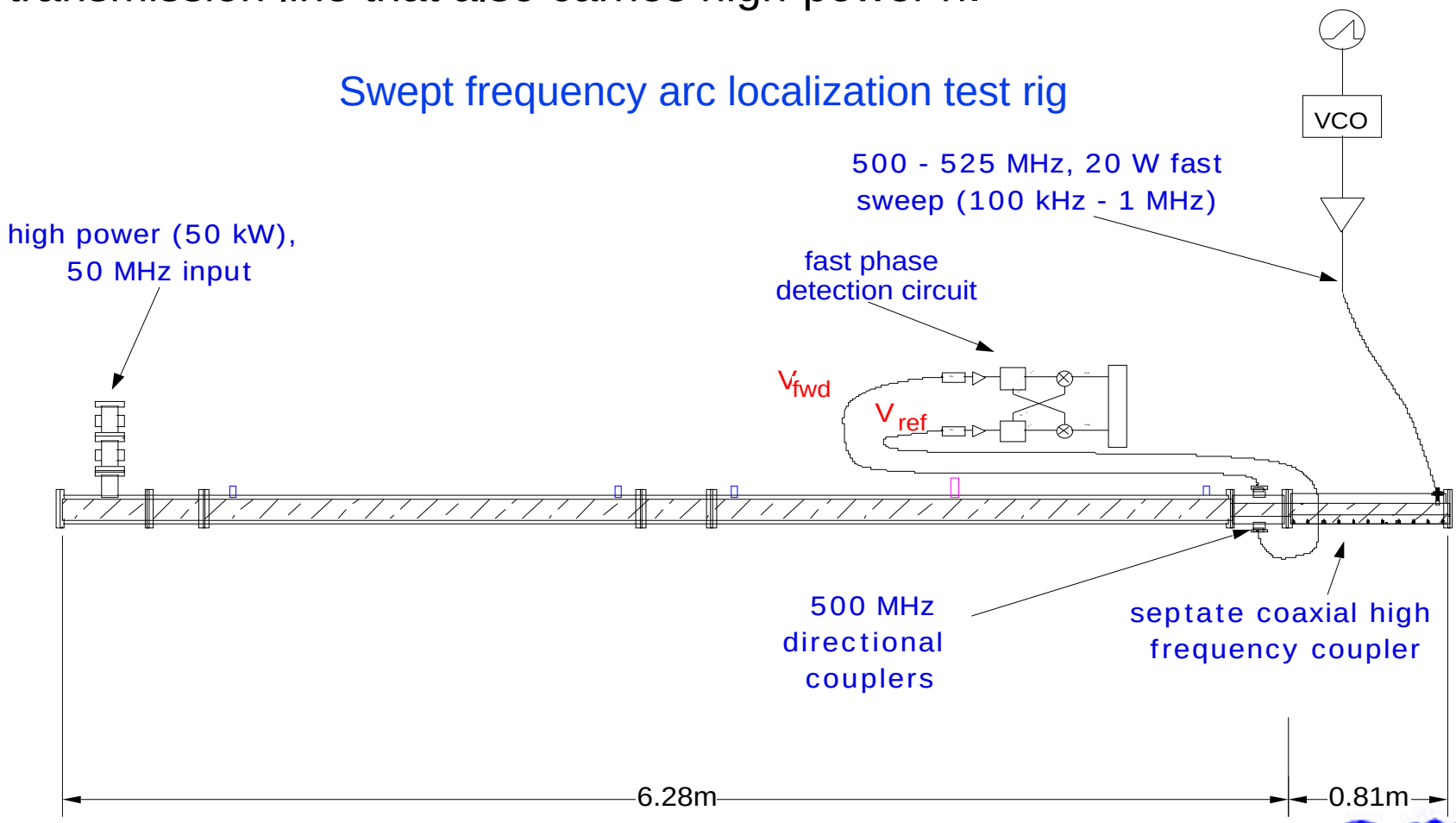

Results are promising

- A high power, high frequency diagnostic wave coupler has been successfully designed, built and tested - provides –5 dB coupling at 500 - 900 MHz, – 63 dB coupling at 50 MHz
- Measured transmission line length using swept frequency technique at high frequency
- Baseline subtraction technique developed which increases sensitivity to high inductance arcs and improves accuracy in the presence of resonances produced by transmission line elements connected in parallel on the load side of the arc location
- Initial measurements show phase shift during arc which is not seen before arc. Demonstrates that:
  - Arc produces measurable change in diagnostic wave phase shift
  - Measurement is insensitive to the high-power, low-frequency RF producing the arc.

Should be able to see location of arc in vacuum, as well as in pressurized line.

KSTAR Antenna Prototype (Korea)

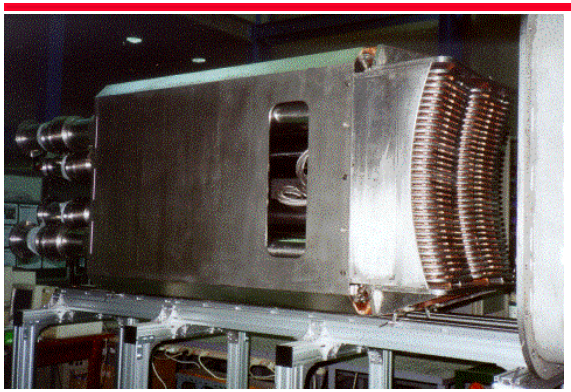

Faraday shield

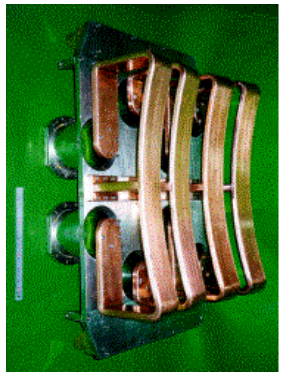

Current strap

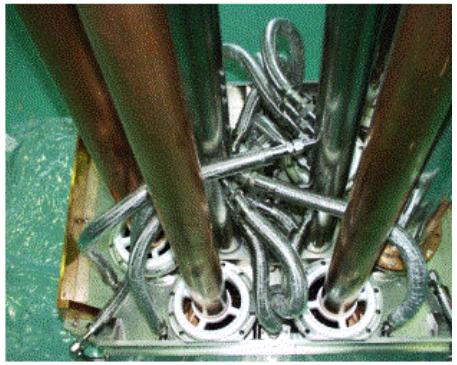

Coolant Manifold

Driving system

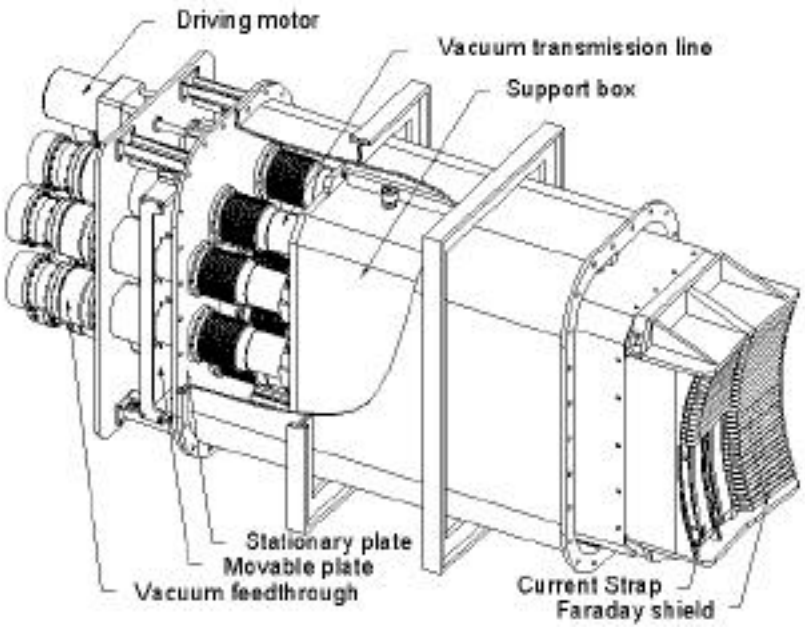

Prototype Antenna Specification

- 1130H x 730W x 3005L, 1.5 ton
- Radial stroke: 100 mm
- Power : 6 MW
- Frequency : 25 - 60 MHz
- 4 straps, center grounded, fed both ends
- FS tube made of SUS304 (Inconel 625)
- Resonant loop configuration
- Viton O-ring seal (Helicoflex)
- T_{baking} < 100 °C
- Cooling ; straps, Faraday shields, cavity walls, septa, VTL inner conductor

Prototype antenna tests are being carried out

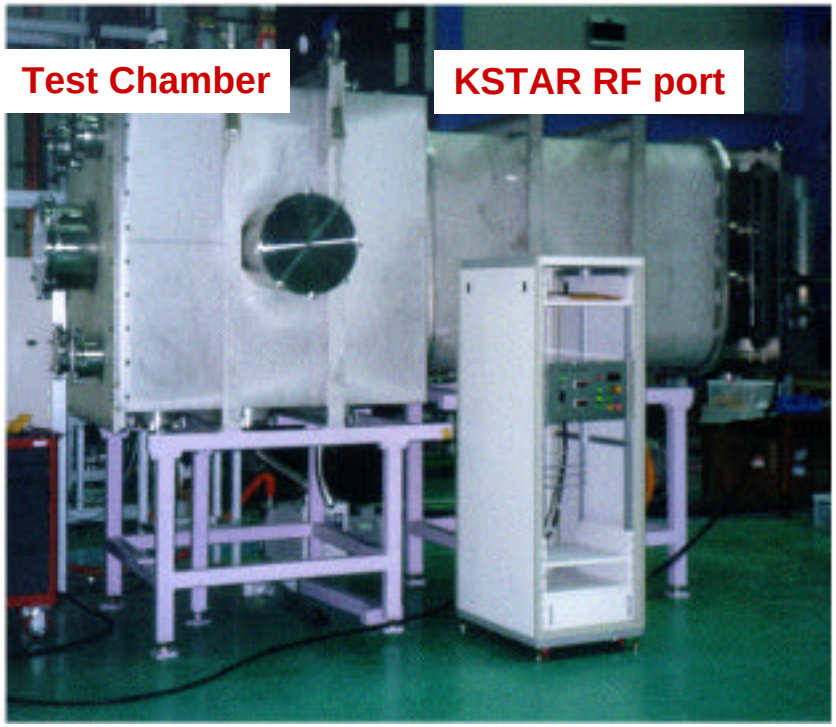

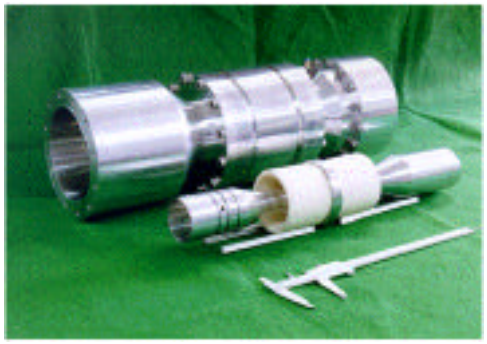

Vacuum feedthrough

Mechanical Test

- Set-up assembly/disassembly procedure
- Cooling test; flow speed (Strap 3.6 m/sec, FS tube 1.6 m/sec)
- Driving test under vacuum; Stroke 100 mm, Speed 4 mm/sec, Position accuracy ±0.1 mm
- Vacuum test; < 8×10^{-7} Torr (w. antenna)
  ? (w. coolant)
- Fulfill the KSTAR requirements

Test on-going/planned

- RF high voltage test with 30 kW, 27 - 55 MHz transmitter
- RF high voltage test of vacuum feedthrough
- B_4C coating (PVD) on Inconel 625 rod

Summary

Progress is being made on several fronts –

- Several experiments now or planned to test new antenna concepts in presence of plasma
  - Folded waveguide
  - Combline
  - JET-EP (ITER prototype)

- A few (i.e., one) experiments to study voltage breakdown in presence of plasma
- Still lacking: detailed studies of plasma-edge interaction
  - Observations on many experiments of heating of antenna edges in presence of rf.
  - Some models.
  - Not much definitive experimental work.
- Arc localization work may help pin down where rf breakdown is occurring, and may be very useful in near-term.