# ORNL RF Engineering Support

B. Nelson, M. Cole, P. Fogarty, P. Goranson,
J. Ping, B. Riemer, D. Williamson

Oak Ridge National Laboratory

DOE Peer Review of RF Technology Program
Oak Ridge, TN
May 9, 2000

# Presentation Outline

- Experience and capabilities
- RF Design challenges
- Examples of RF mechanical engineering
  - Design
  - Analysis

# Experience and capabilities

- 20 years close interaction between physicists and mechanical engineers and designers
- On-site expertise in material selection, welding and brazing processes, advanced coatings, inspection and QA, and machining methods
- State of the art design tools
  - Pro/Engineer solids modeler
  - NASTRAN, ABAQUS, Mechanica, PTHERMAL FEA Solvers
  - EDDYCUFF, EMAS for transient electro-magnetics

# ORNL engineers have designed many RF launchers

- Development launchers to advance the state of the art

  Folded waveguide (2 versions), ITER antenna

- “Enabling” launchers for experiment heating, current drive

  Tore Supra, TFTR, DIIID (3 designs), ATF (ICH, ECH), KSTAR

- Advanced launchers for next generation machines

  CIT, BPX, TPX (ICH and LH), FIRE, ITER, QOS

# Launchers cover a range of performance parameters

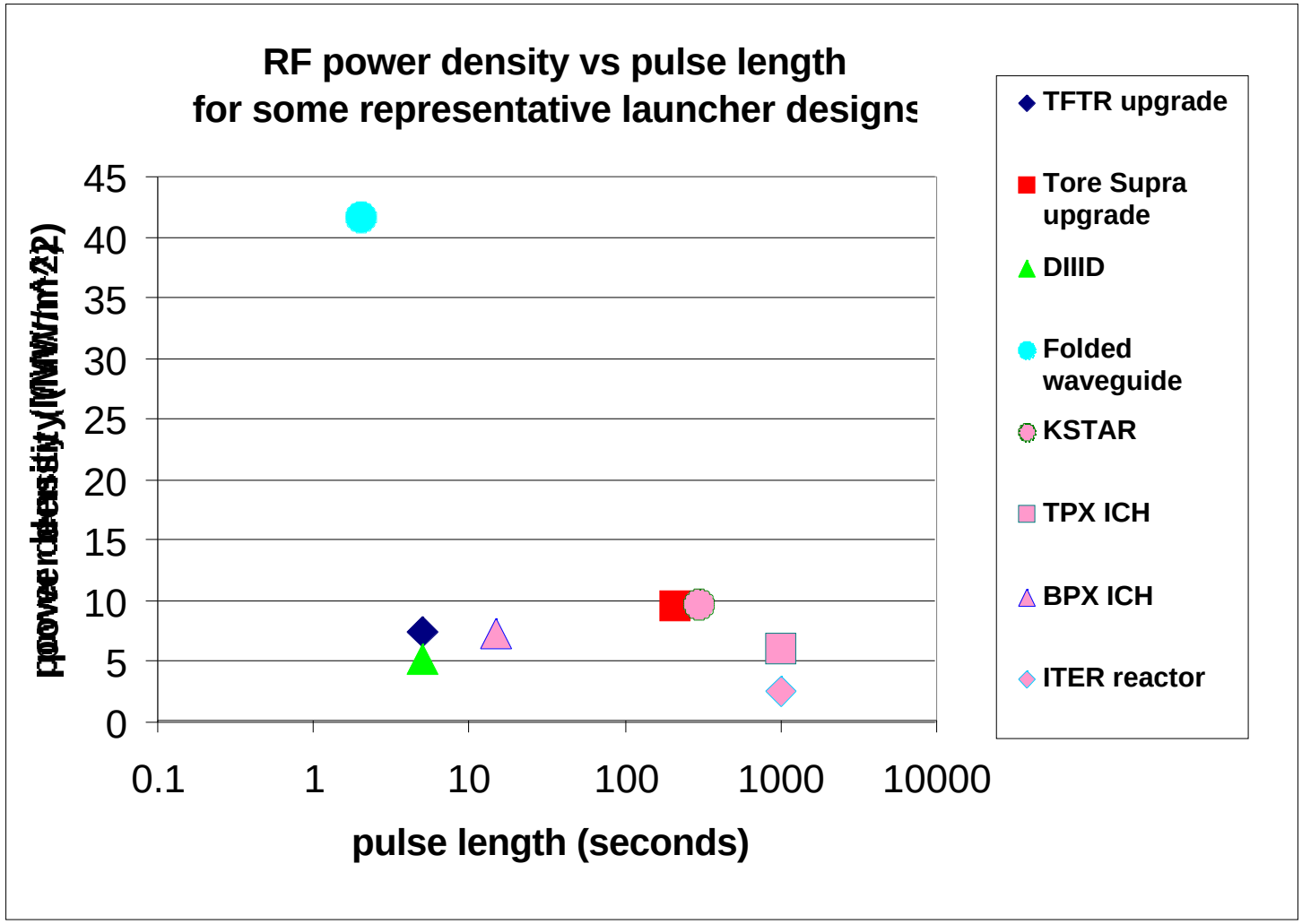

# RF Design Challenges

- Robust Mechanical Systems that have optimal electrical performance
  - Thermal loads and stresses
  - Electromagnetically induced stresses from plasma disruption
- Compact systems that fit in tight places
  - High power density
  - Close control of position, tolerances
- Systems compatible with a nuclear device
  - integral shielding, low activation
  - radiation heating, damage

# Optimizing RF and Mechanical Requirements

## Tore Supra RDL Antenna

- Steady State Device
- 16 $^{MW}/_{m}{}^{2}$ RF Power Density
- 0.5 $^{MW}/_{m}{}^{2}$ Plasma Heat Flux
- $160^{o}$ C Water Coolant at 35 atm Pressure

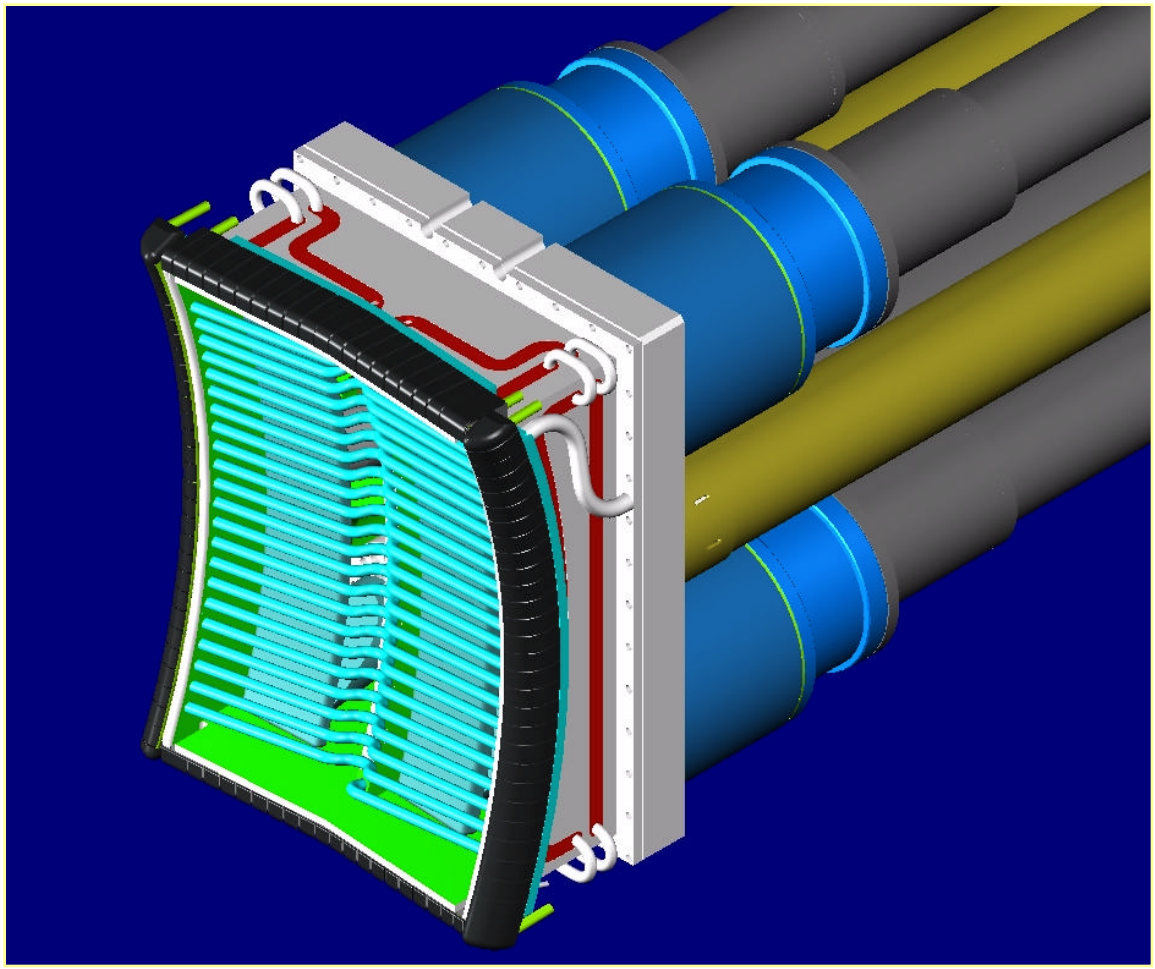

# Optimizing RF and Mechanical Requirements

## Faraday Shield Design Issues

- RF Performance
- Critical Buckling Loads of Coolant Tubes
- Thermal Stress
- Vacuum Integrity
- Plasma Sprayed Coatings

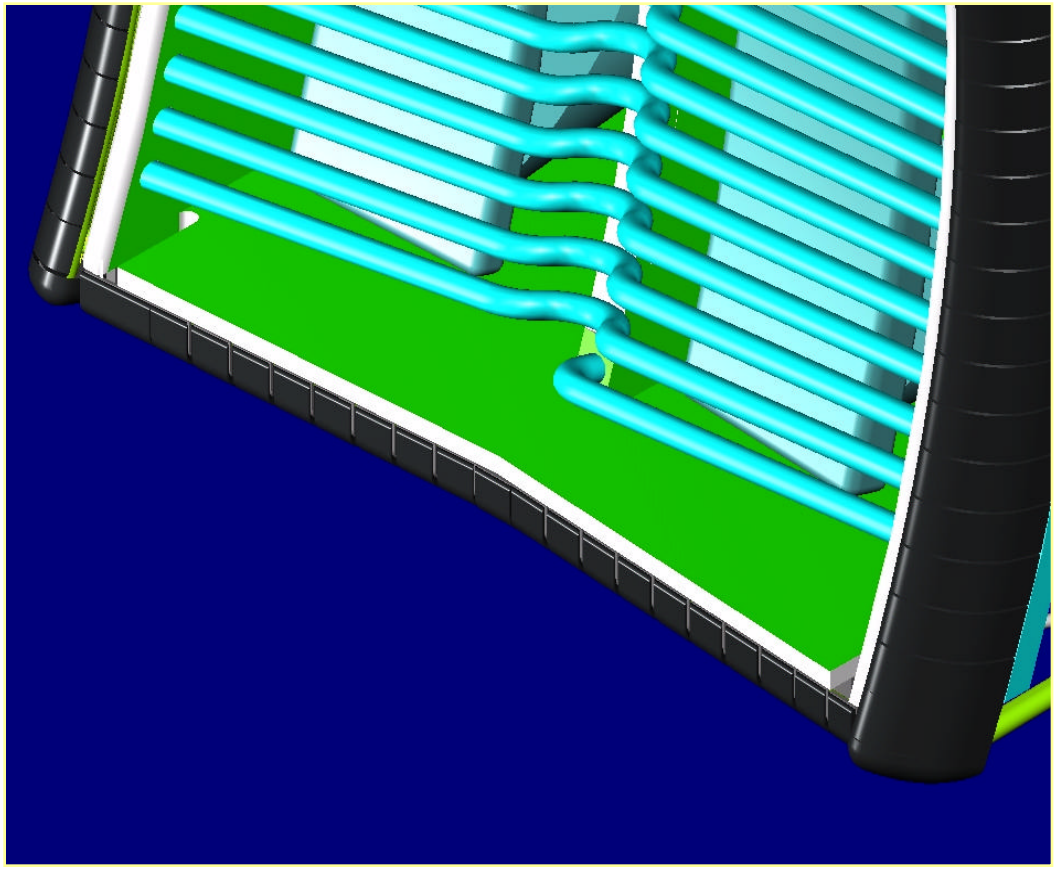

# Coupled Thermal and Structural Analysis

## Faraday Shield Analysis

- Thermal Loads Predicted by RF Engineers
- Thermal Profile Calculated Using Water Convection
- Stresses Calculated
- Configuration Modified as Required for Next Iteration

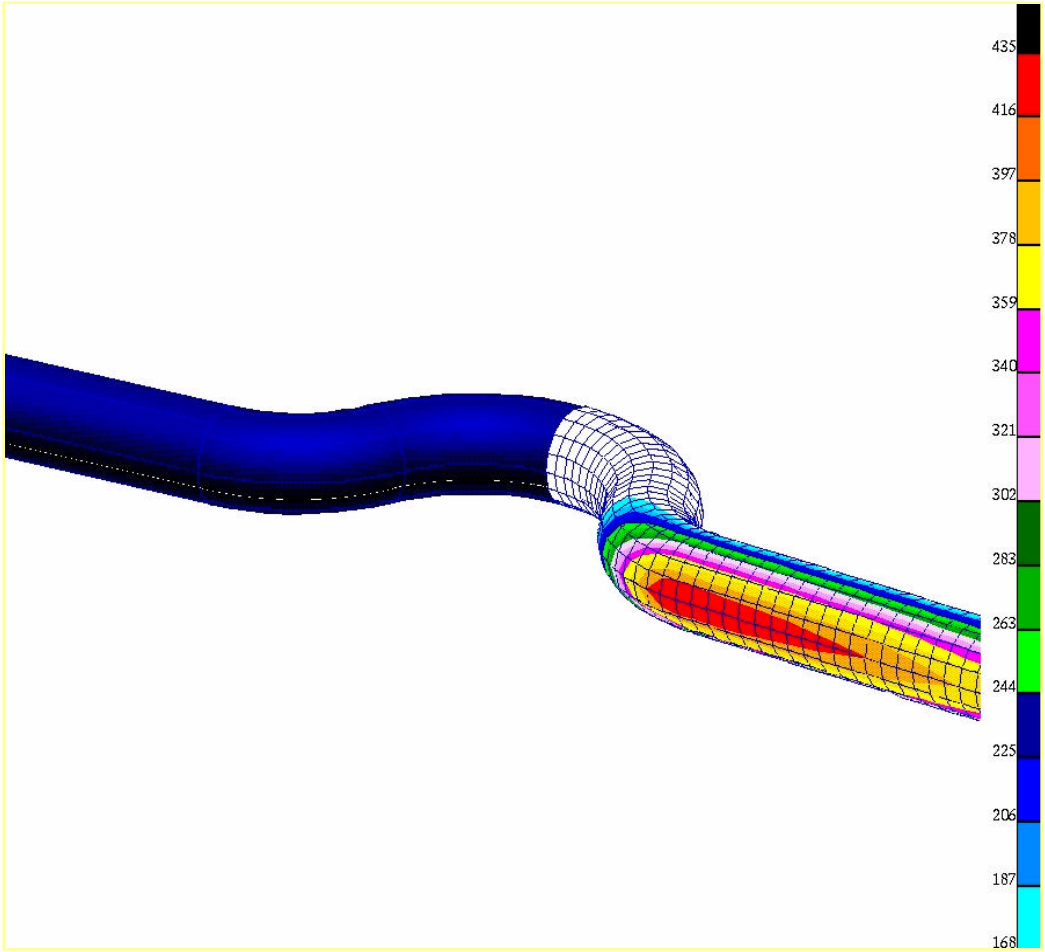

# Disruption effects on KSTAR Faraday Shield Tube

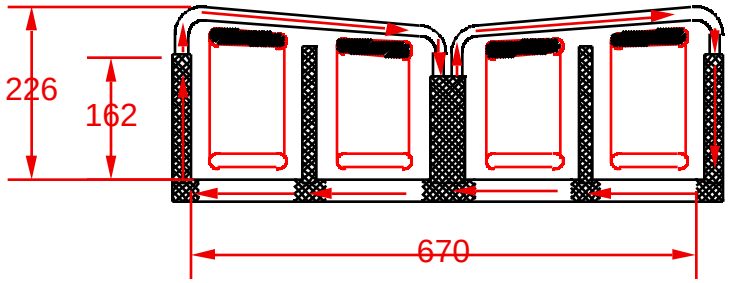


Faraday shield geometry

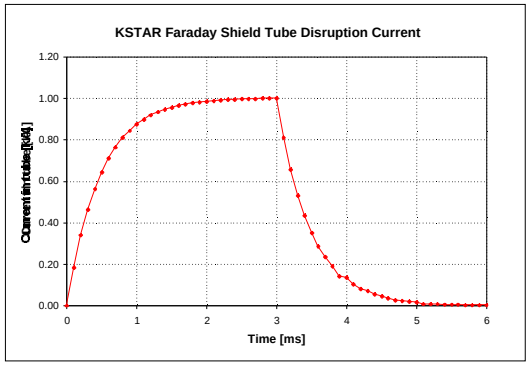


Current induced in tube

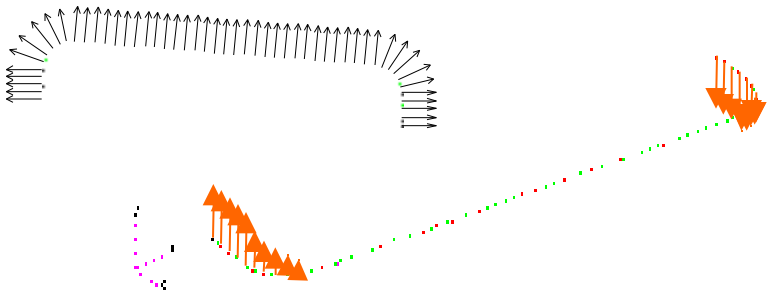

Forces on tube

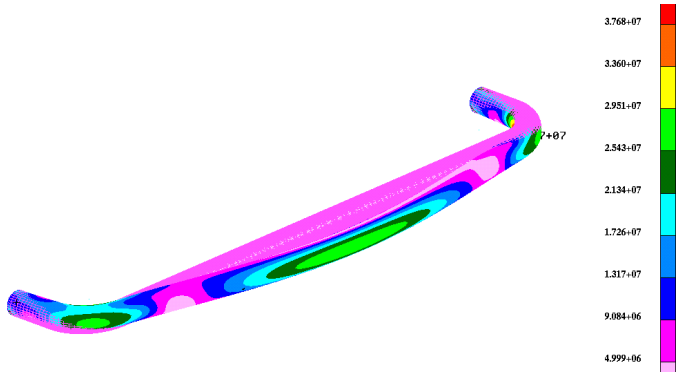


Stresses (static analysis)

# KSTAR disruption effects - dynamic

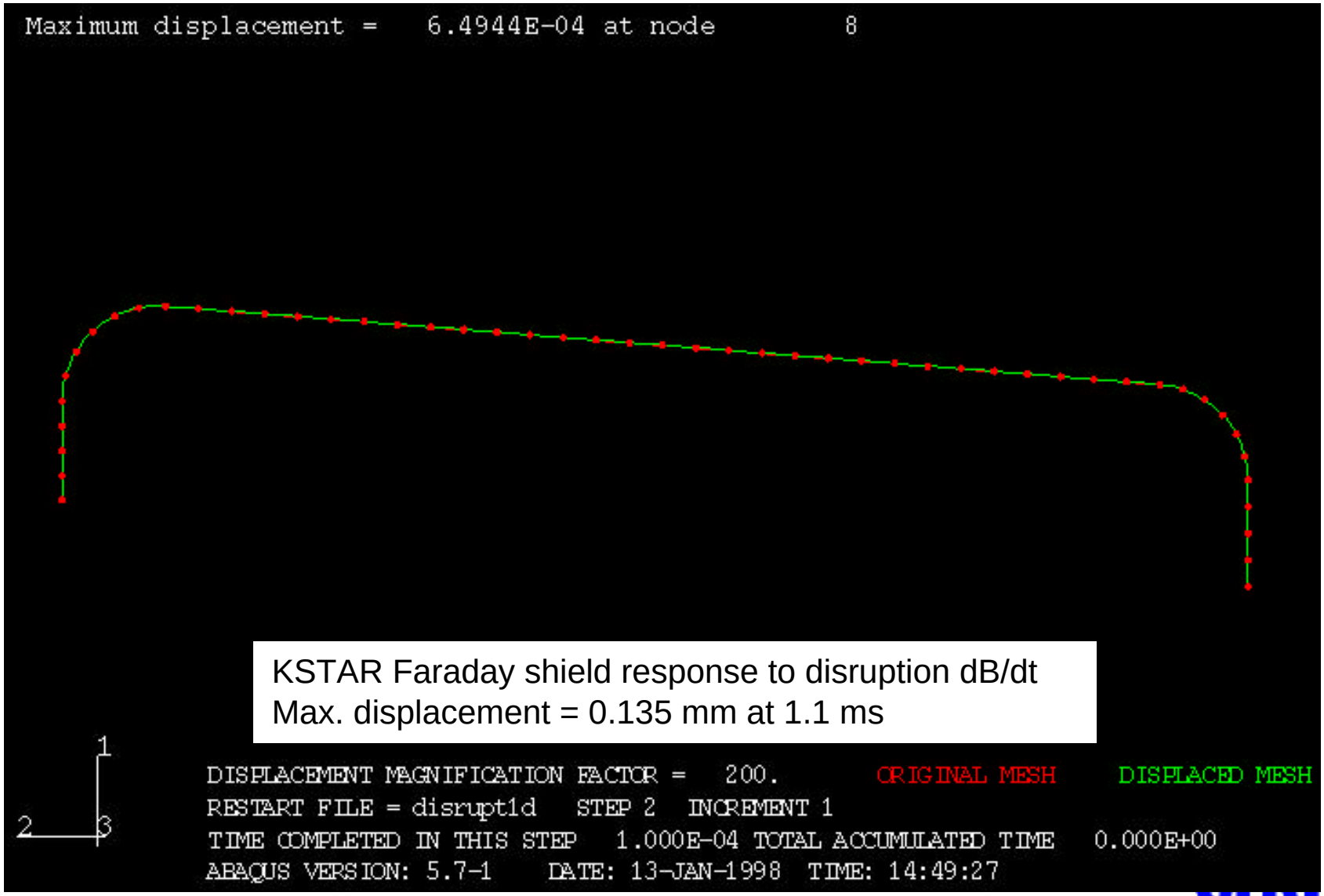


KSTAR Faraday shield response to disruption dB/dt
Max. displacement = 0.135 mm at 1.1 ms

# Structural Analysis - Disruptions

Disruption loads vary with device parameters

...***e.g. Faraday shield tubes***

| **Launcher** | **B0 (Tesla)** | **Ip (MA)** | **Max load on faraday shield tube (lbs/in)** |
|---|---|---|---|
| Tore Supra | 4.5 | 2 | 13 |
| DIII-D | 2.2 | 3 | 21 |
| KSTAR | 3.5 | 2 | 15 |
| ITER (FDR) | 5.7 | 21 | 1400 (10 ms Ip decay)<br>840 (50 ms Ip decay) |

# Disruption effects on ITER launcher

All components of assembly affected by disruptions

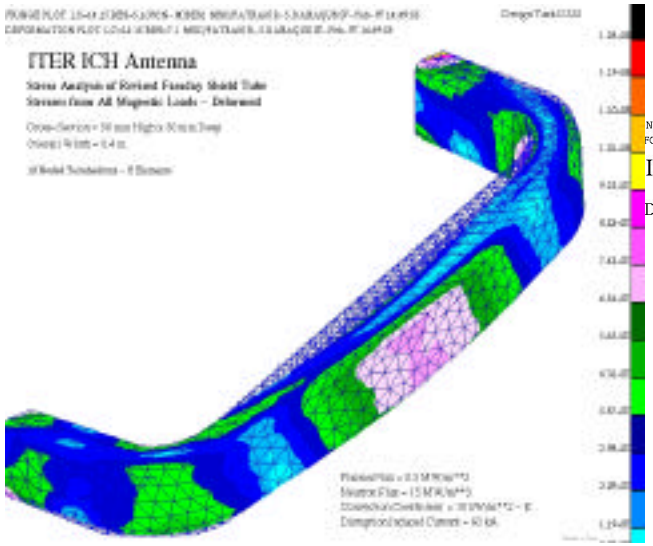


Faraday shield element

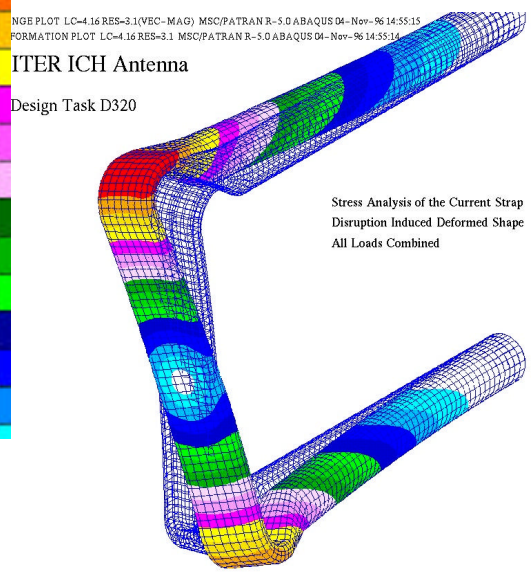


Current strap

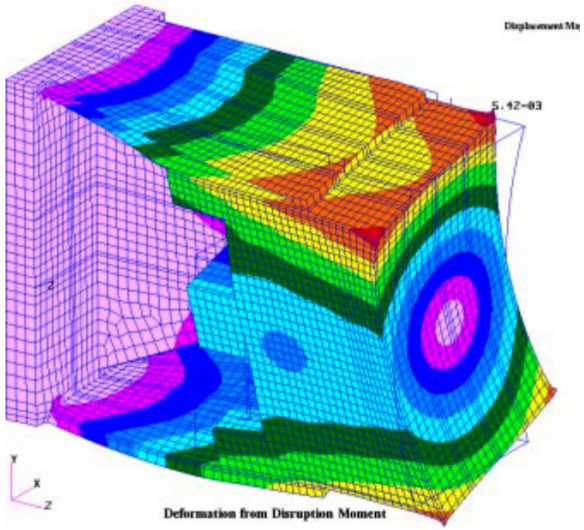


Box structure

# Thermal Analysis of ITER Faraday shield element

- Thermal Analysis Driven By Radiant, Neutron, and Gamma Heating

- High Temperature, High Pressure Water

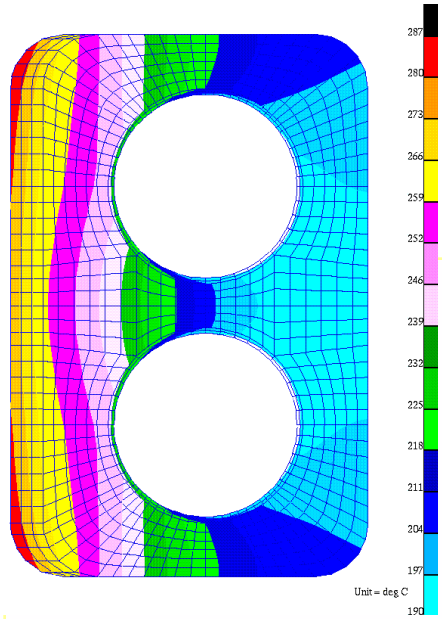


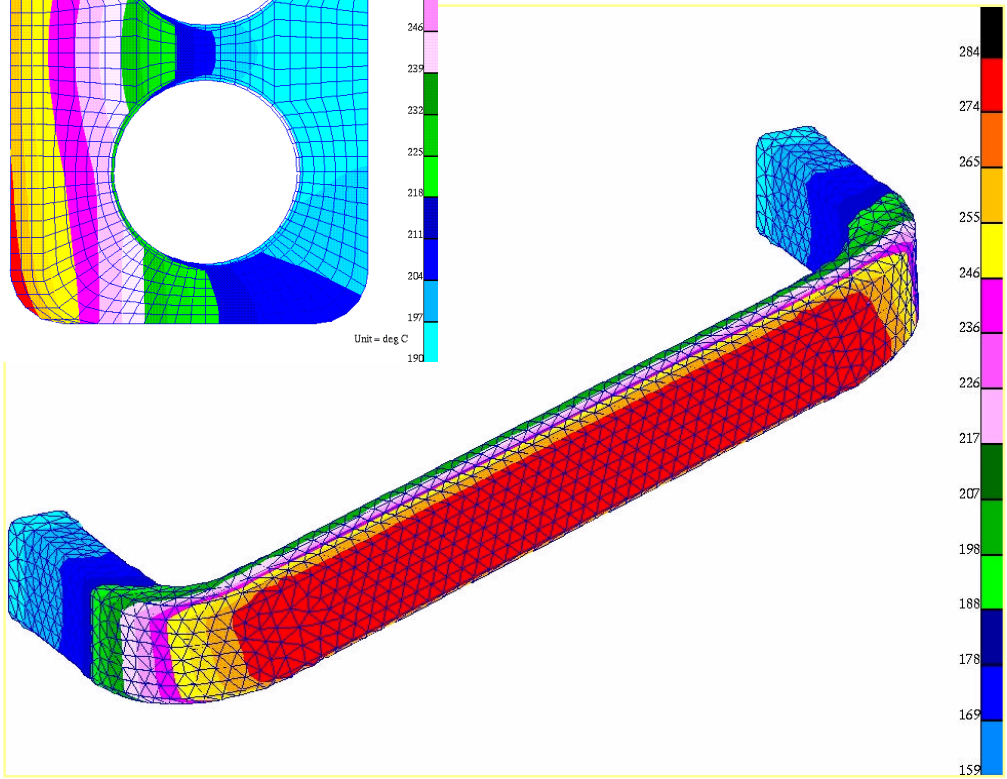

# Thermal / Structural analysis of ITER FS element

Thermal stresses combine with disruption stresses

91 Mpa

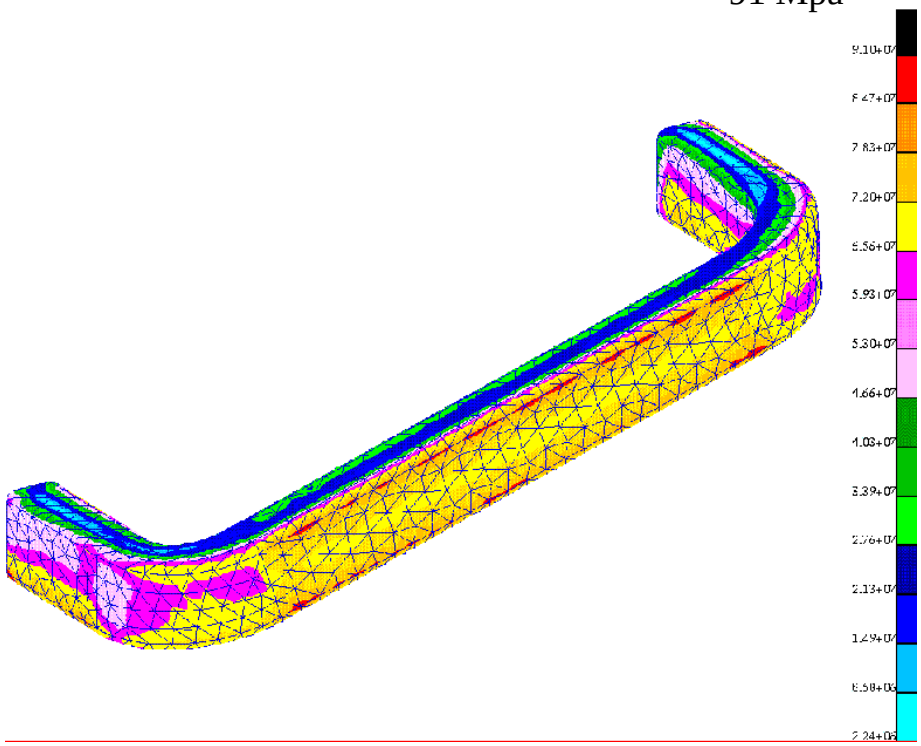

186 Mpa

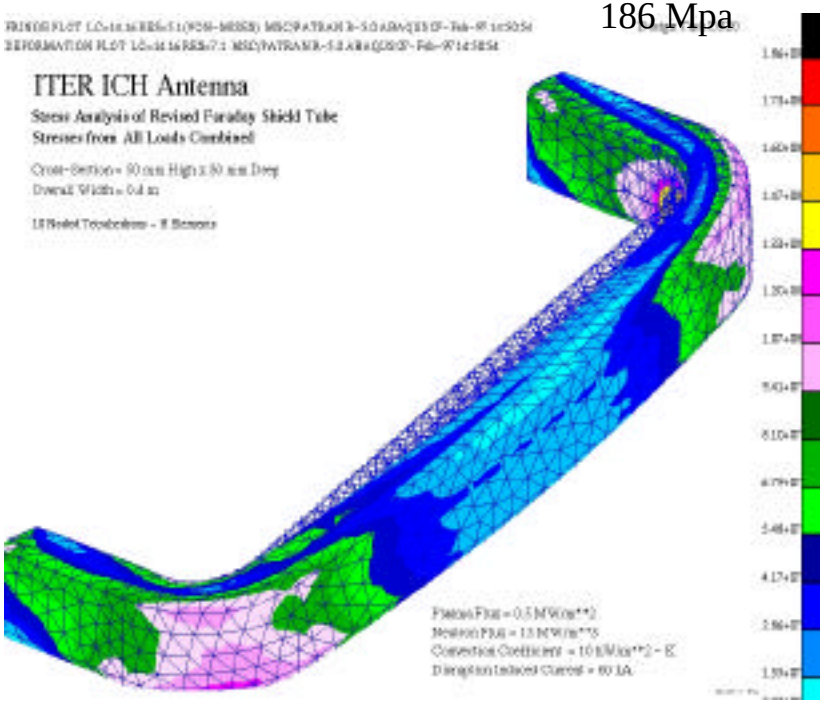

# Extensive CAD capabilities avoid manufacturing problems

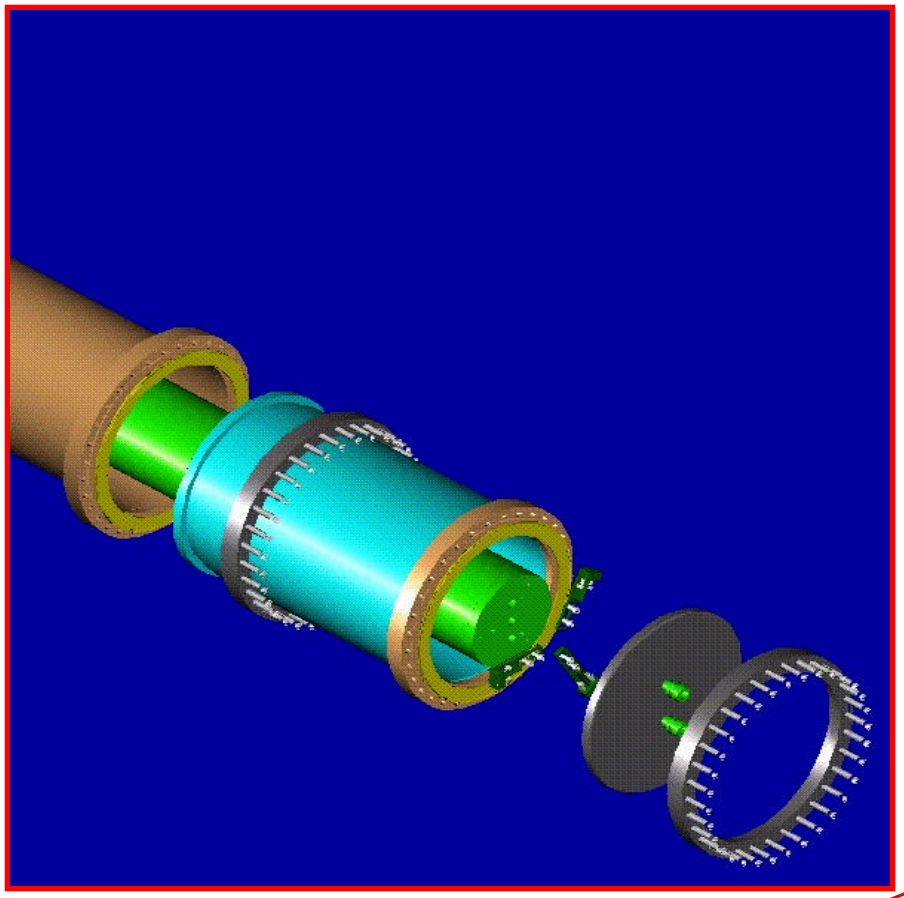

Rear view of stub during assembly

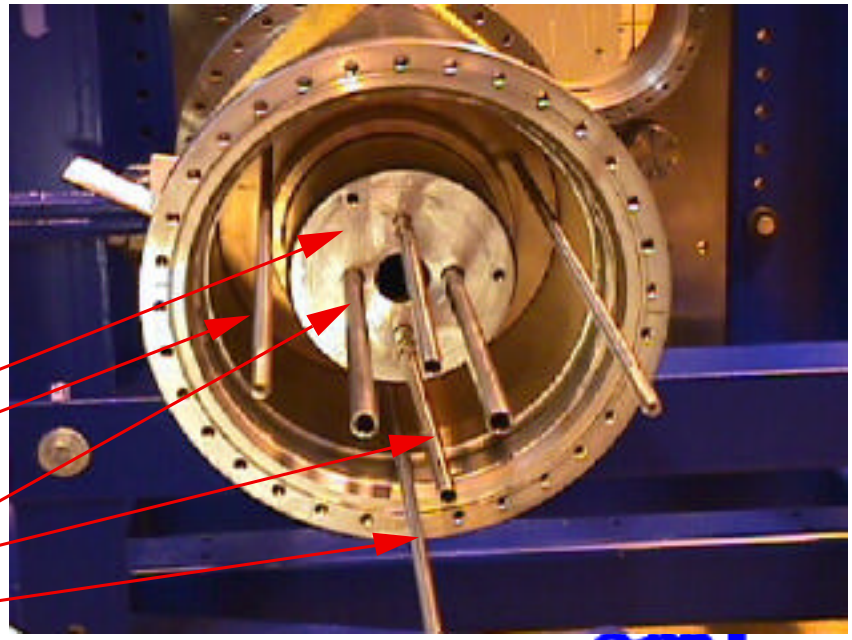

Center conductor

Sliding short

Water cooling tubes

Push rods for short

# We also do tuning and matching system layouts

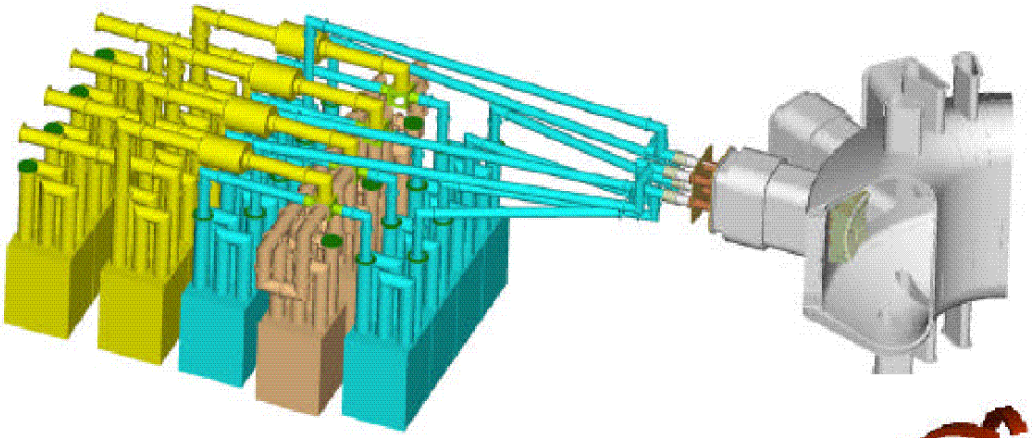

KSTAR

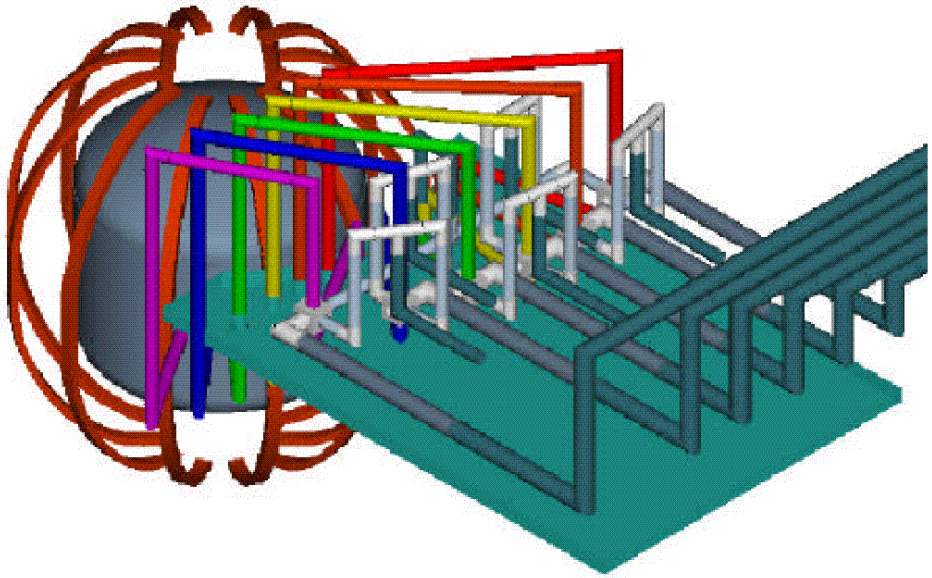

NSTX

# Designing for Tight Spaces

## DIII-D Antenna

- Designed for Steady State Operation
- All Components but Front Tubes (moly) Actively Cooled
- Current Carrying Components All-Welded, but Fit to Within 0.01 inch
- Complex Geometry All Fit With No Leaks or Failures in 3 Years Operation

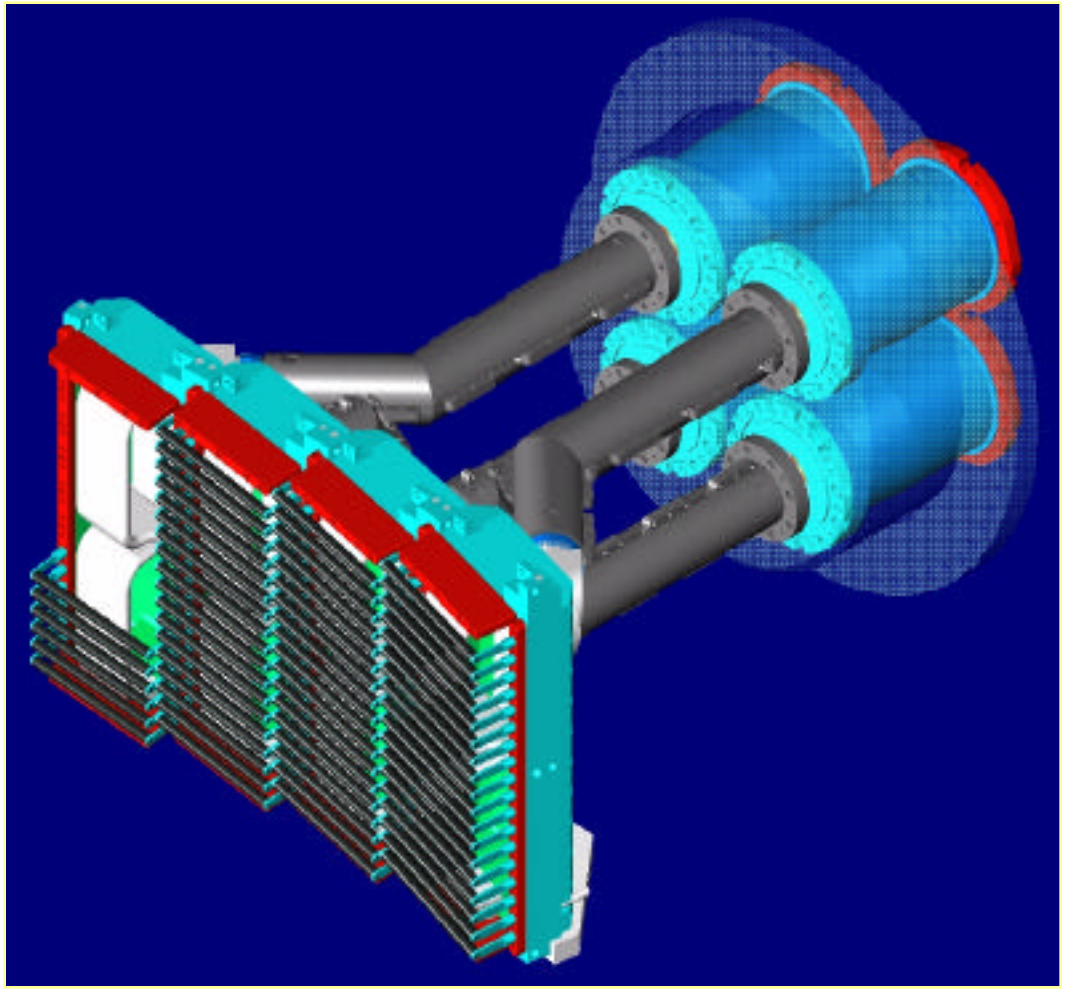

# NCSX Launcher position layout

RF launchers must find a home among TF coils, NBI, and saddle coils

***…..but they fit!***

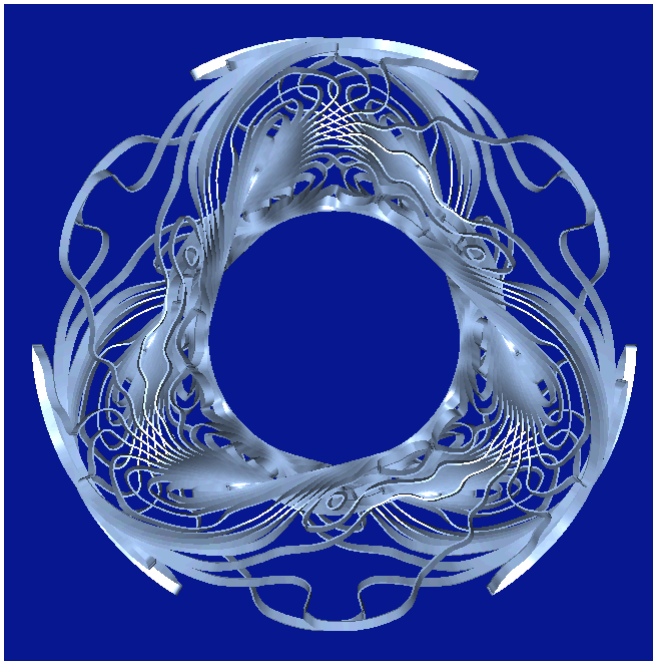

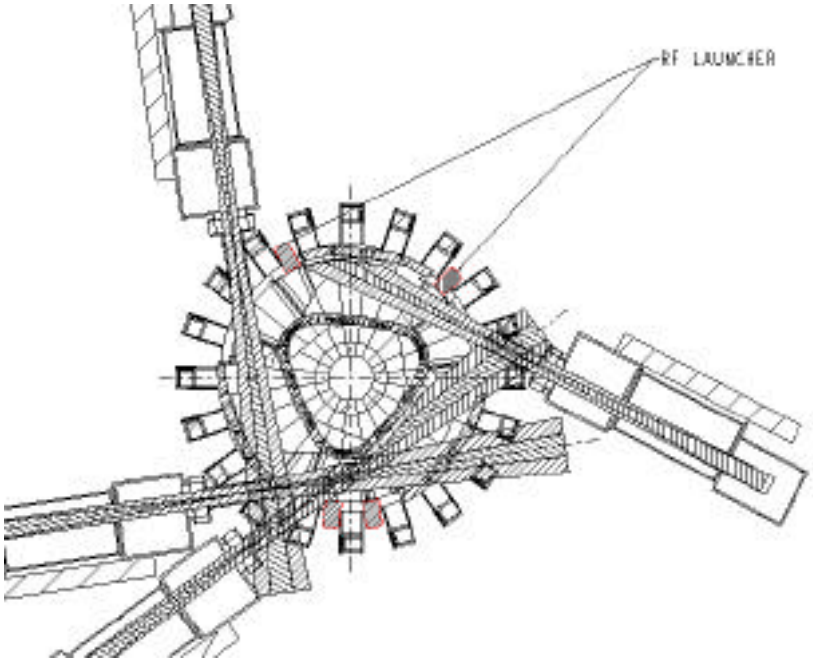

# Technology Development

## Tore Supra Bumper Limiters

- 1000 $^{W}/_{cm}2$ Leading Edge Flux
- Multi-Cycle Braze
  - High Temperature Joint Between Graphite and Moly
  - Lower Temperature Joint of Moly to Copper

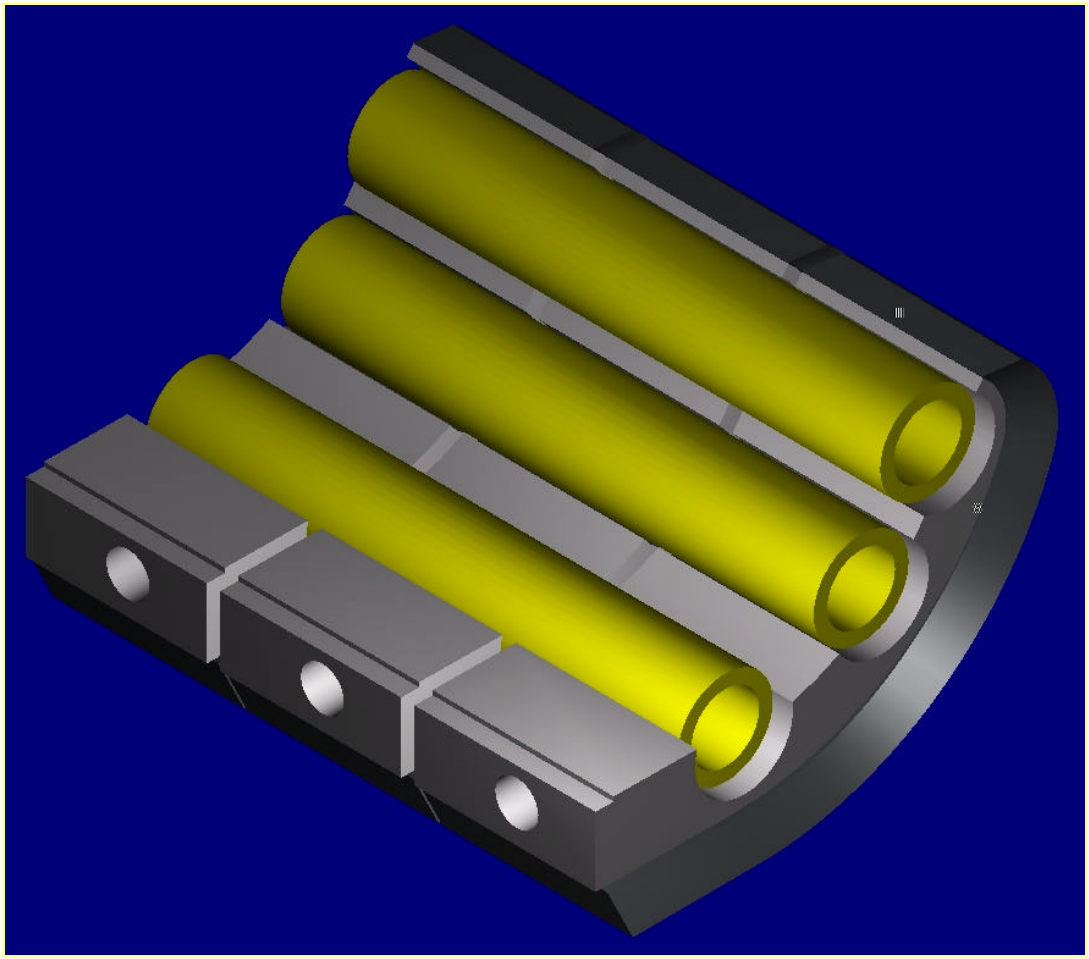

# Complex Geometries

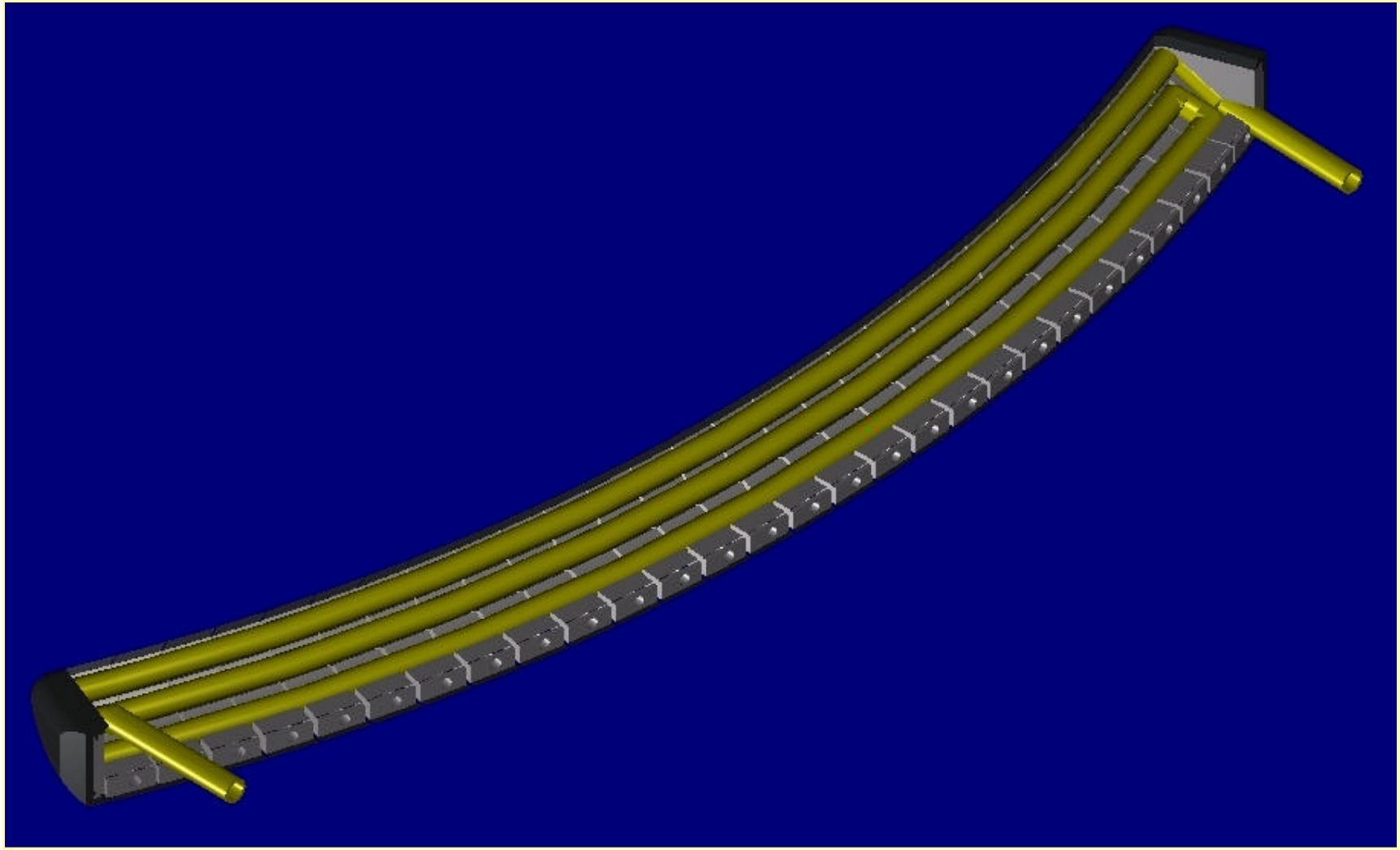

# Materials

- Wide experience with varieties of non-magnetic alloys
  - Stainless Steels
  - Nickel Alloys
  - Molybdenum
  - Glidcop
- Developing technology for titanium alloys
- Depth of Experience in Electro-Plating for Enhanced RF Surfaces
- Experienced in plasma spray deposition for protection of plasma-facing surfaces

# Summary Comments

- Broad range of technical expertise is available at one place
  - Engineering, Materials, Fabrication,
- Extensive experience at design and building of RF launchers
  - CAD modeling
  - Force calculations
  - Thermal and Stress analysis
  - Fabrication / Vendor oversight
- Active in design of RF hardware for advanced systems / reactors
  - ITER, FIRE, etc.