Abstract

Two new four-element fast wave current drive antennas have been installed on DIII-D. These antennas are designed for 10-s pulses at 2 MW each in the frequency range of 30 to 120 MHz. Each element comprises two poloidal segments fed in parallel in order to optimize plasma coupling at the upper end of the frequency range. The antennas are mounted on opposite sides of the vacuum vessel, in ports designated 0° and 180° after their toroidal angle.

Each antenna array is fed by a single transmitter. The power is first split two ways by means of a 3-dB hybrid coupler, then each of these lines feeds a resonant loop connecting a pair of array elements. The power transfer during asymmetric phasing is shunted between resonant loops by a decoupler. The resonant loops are fitted with line stretchers so that multiple frequencies of operation are possible without reconfiguring the transmission line.

Commissioning of these antennas has been underway since June, 1994. Several deficiencies in the transmission line system were uncovered during initial vacuum conditioning, including problems with the transmission line insulators and with the drive rods for the variable elements. The former was solved by replacing the original alumina insulators, and the latter has been avoided during operation to date by positioning the tuners to avoid high voltage appearing on the drive rods. A modified design for the drive rods will be implemented before RF operations resume operation in June, 1995.

New transmitters were procured from ABB for the new antennas and were installed in parallel with the antenna installation. The transmitter commissioning was hampered by a number of difficulties, including a failure of a high voltage transformer and three FPA tube failures. However, both transmitters were in operation at reduced power for the February run.

During initial vacuum conditioning of the antenna in the 180° port a fast digital oscilloscope was used to try to pinpoint the location of arcing by a time-of-flight technique and to develop an understanding of the typical arc signature in the system. This is viewed as the first step in the development of a possible ELM discrimination method for later implementation.

DIII-D Long-Pulse FWCD Antenna

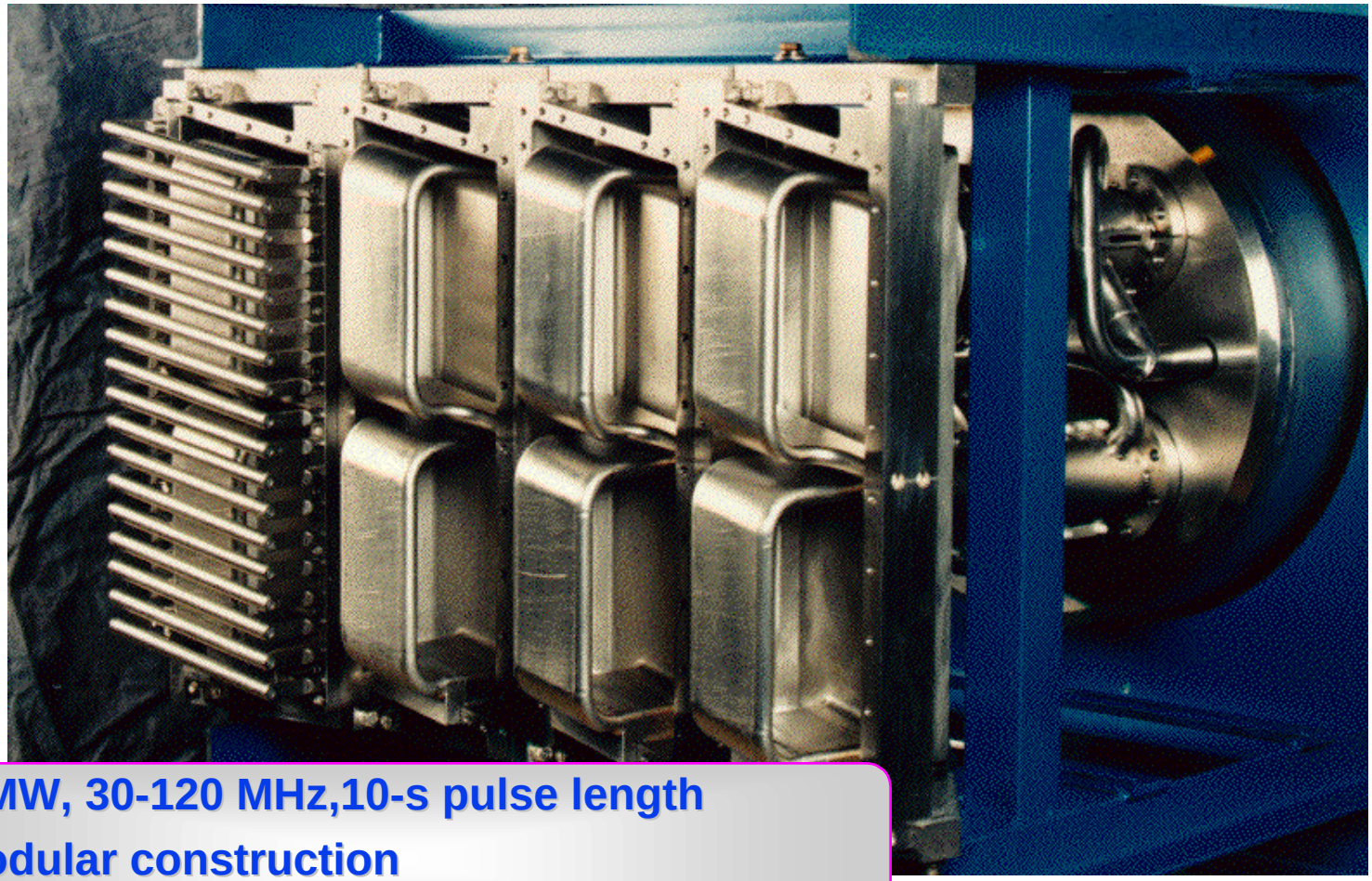

- 4 MW, 30-120 MHz,10-s pulse length
- Modular construction
- Single-tier, slanted Faraday shield with B4C

GENERAL ATOMICS

The 180° antenna installed in DIII-D

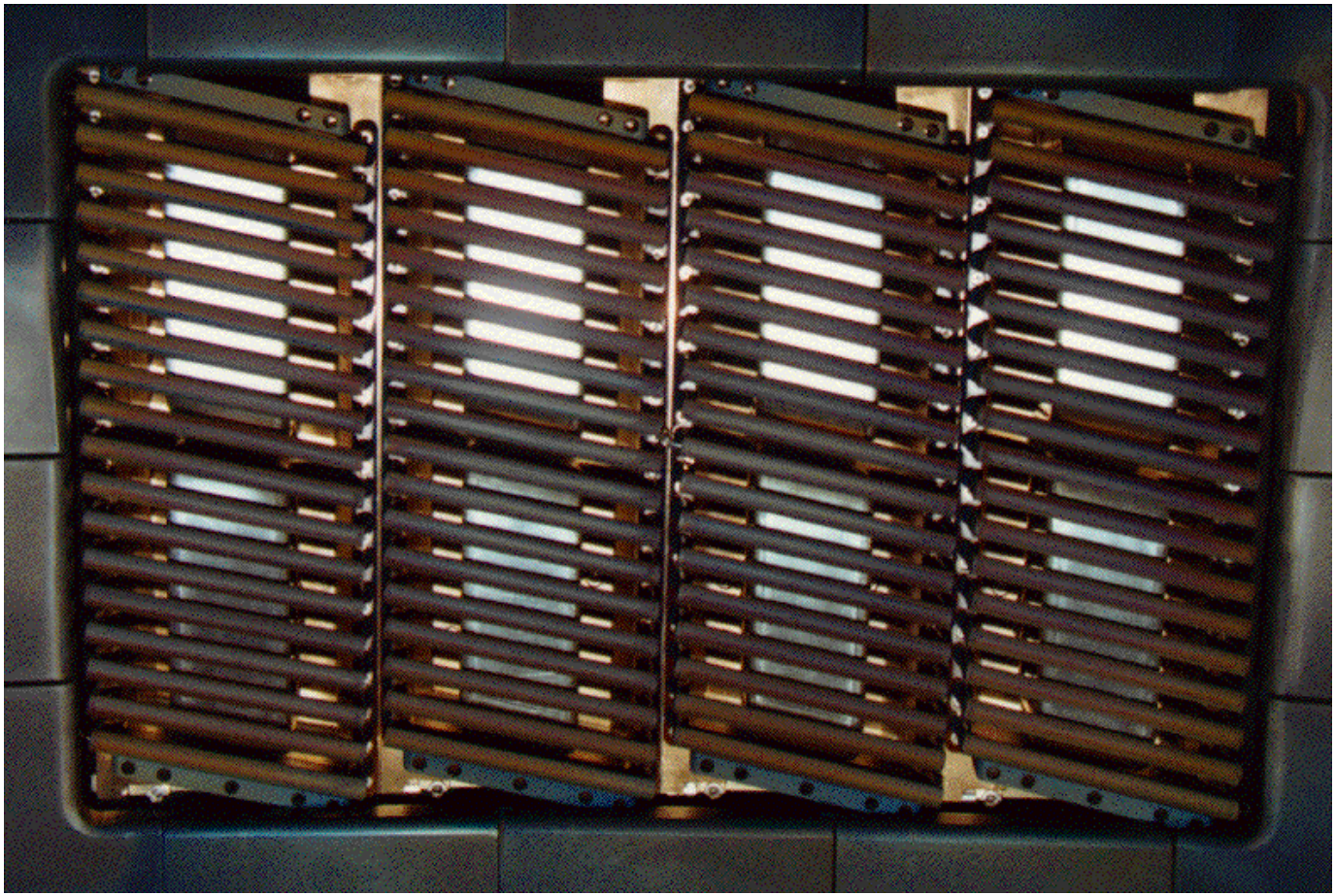

GENERAL ATOMICS

Highlights

- **Both antennas installed: February, 1994**
- **Vacuum conditioning started:**
  - **0° antenna** **June, 1994**
  - **180° antenna** **February, 1995**
- **Plasma operation started:**
  - **0° antenna** **July, 1994**
  - **180° antenna** **February, 1995**
- **Maximum power to date:**
  - **0° antenna** **1.5 MW(transmission line limited)**
  - **180° antenna** **1.7 MW(transmitter limited)**

GENERAL ATOMICS

All three antennas have been operated into the DIII-D plasma.

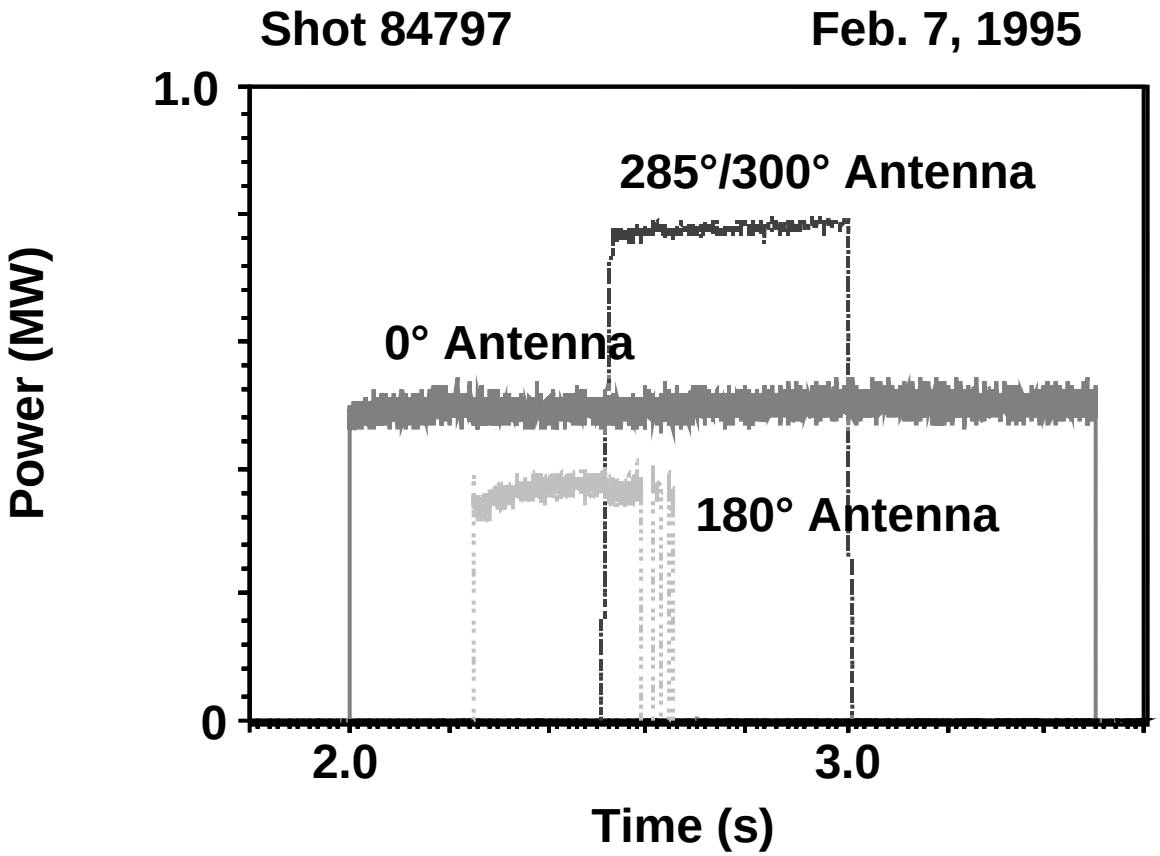

GENERAL ATOMICS

All RF surfaces are nickel plated to reduce conditioning times.

Cross section of antenna module

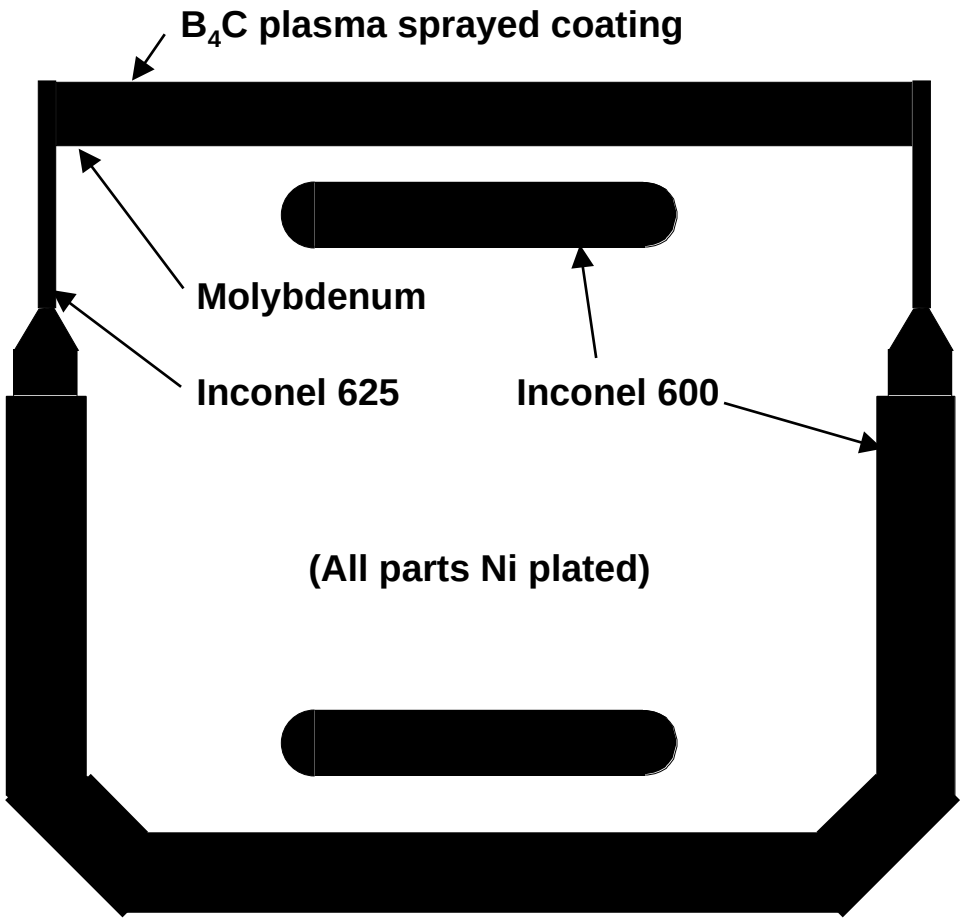

GENERAL ATOMICS

Circuit diagram for the long-pulse FWCD antennas

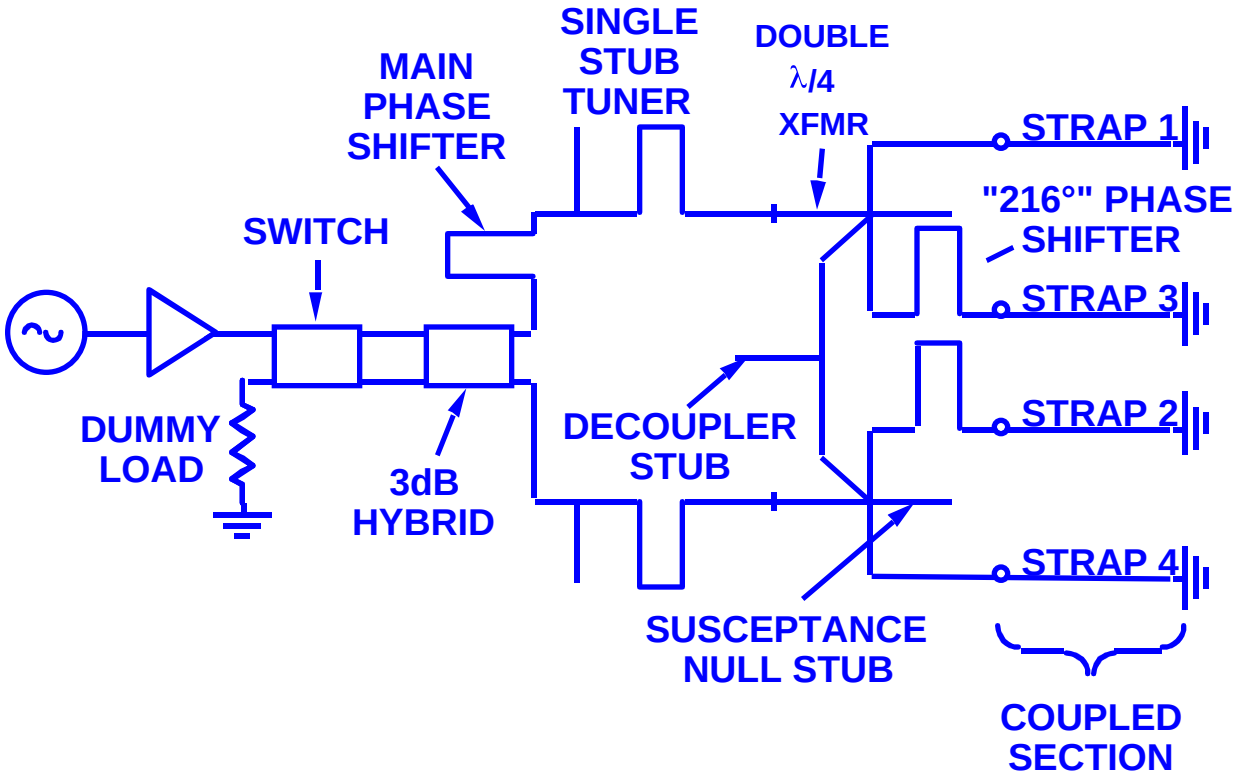

Arc diagnosis during vacuum conditioning

- Determining the location of arcs in the DIII-D circuit requires many diagnostics.
- For external arcs, directional couplers can determine the affected section of transmission line.
- Time-of-flight analysis can be used to narrow the search for fast arcs.
- Fast discrimination is necessary to separate arcs from ELMs.

Slow and fast arcs have been observed during vacuum conditioning.

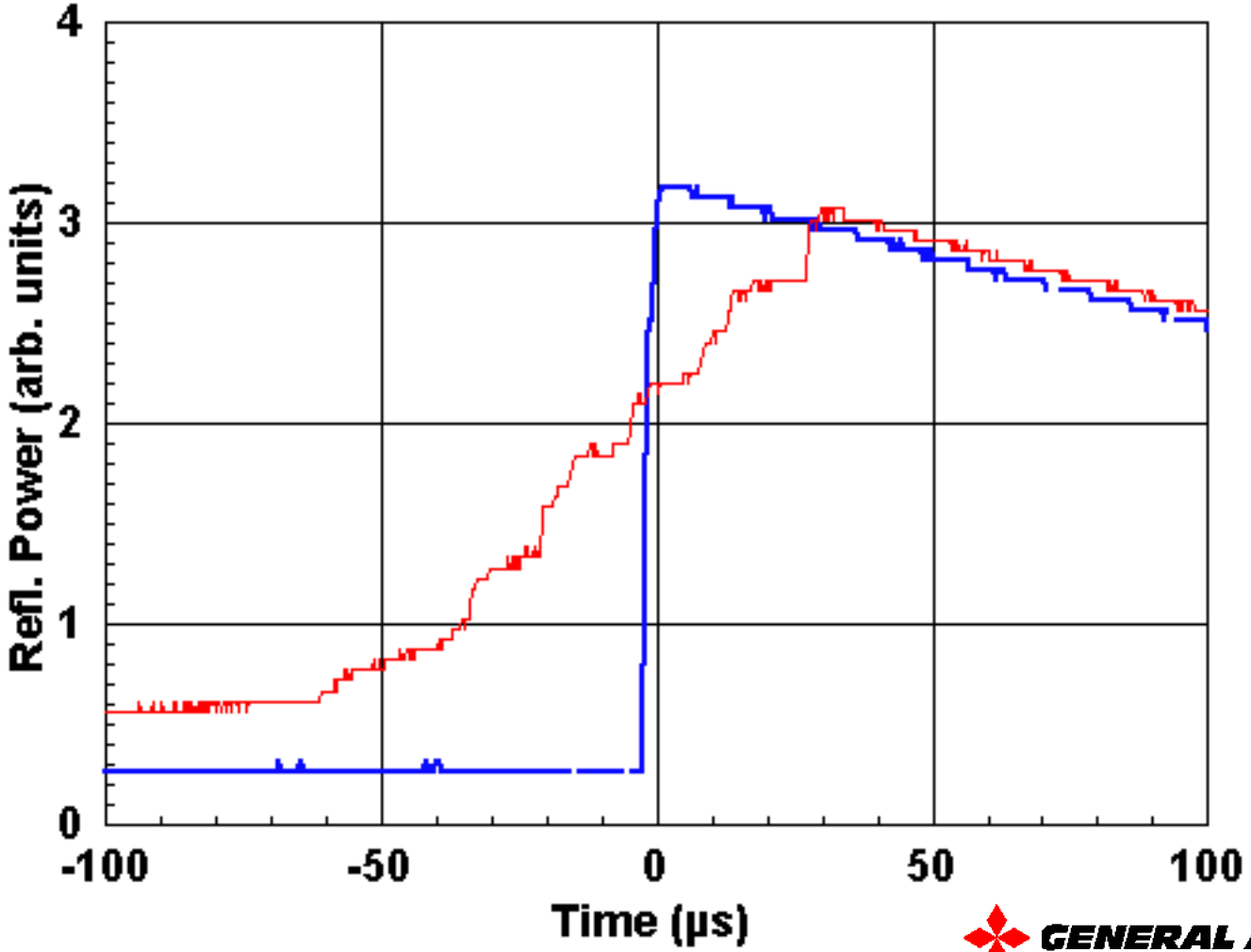

GENERAL ATOMICS

Summary

- Commissioning of the transmitters, transmission lines, and antennas is proceeding in parallel.
- Both new systems have been conditioned in vacuum to 20 kV so far, with 30 kV the design goal.
- So far the limiting elements have been transmitters and transmission lines. Higher power operation should be possible during the next runs.
- There is not yet enough data to compare nickel plating to copper in reducing conditioning times.

GENERAL ATOMICS