GP1.049

Design of a High Power Prototype for the New JET-EP ICRF Antenna

R. H. Goulding, F. W. Baity, G. H. Jones, B. E. Nelson, D. A. Rasmussen, D. W. Swain, *ORNL*
J.C. Hosea, G. D. Loesser, J. R. Wilson, *PPPL,* F. Durodié, *ERM/KMS*
P. U. Lamalle, *EFDA-JET CSU,* P. Tigwell, R. Walton, *UKAEA*

Abstract

A high power prototype (HPP) of a new ICRF antenna for JET ("JET-EP antenna") is being designed and constructed in a collaborative effort between ORNL, PPPL, and EFDA-JET. The JET-EP launcher is designed for 8 MW input power (9 MW/m^2) at 30-55 MHz. Current straps are arranged in a 4 poloidal by 2 toroidal array, minimizing voltage. A modified resonant double loop (RDL) matching circuit uses internal capacitors, and passively accommodates rapidly changing plasma loads. The HPP, consisting of one antenna quadrant, will be tested at ORNL in vacuum at 33kV pk, 920A rms capacitor voltage and current. Innovative features to be tested include the modified RDL circuit, flanges which allow capacitor replacement without antenna removal, a low characteristic impedance vacuum feed line, and integral matching transformer.

JET-EP Launcher

- **8 MW input power, 9 MW / m^2 power density**
- **4 poloidal $\times$ 2 toroidal strap array: use of four poloidal grounds minimizes strap voltages**
- **Internal matching capacitors provide 30 -55 MHz frequency range while limiting region in which high electric fields exist**
- **"Conjugate - tee" matching circuit configuration. Passively produces small change in input impedance for large variation in plasma load, provides ELM - resilient operation**
- **"Plug - in" capacitors allow removal from back of port in the case of failure, without the need for torus access or in - torus remote handling**

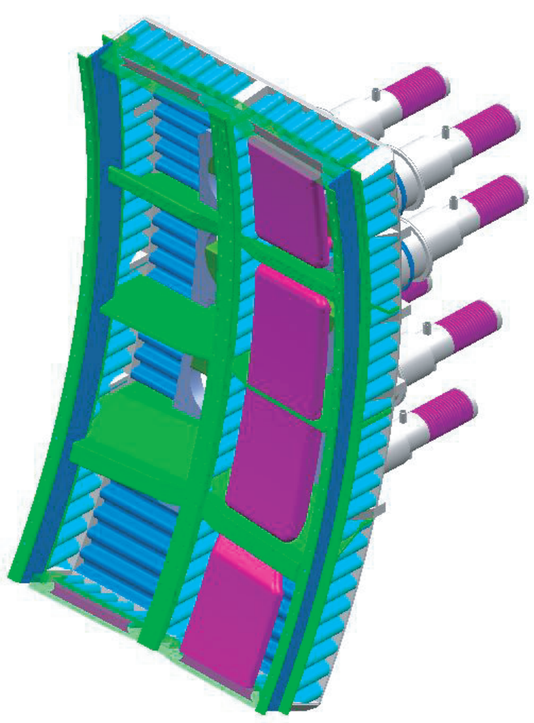

Antenna isometric view: Faraday shield and left-hand current straps not shown

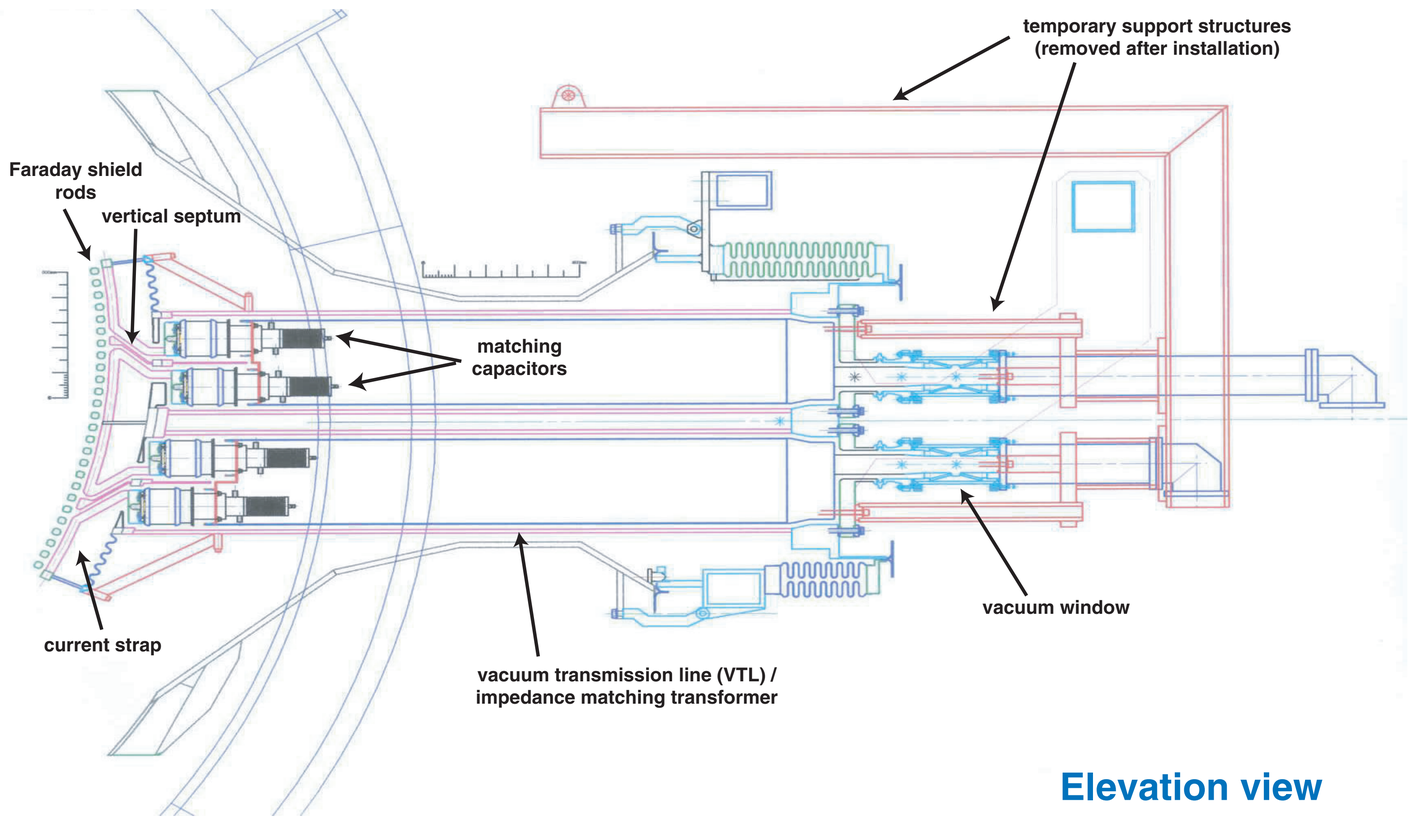

Elevation view

Conjugate - Tee Matching

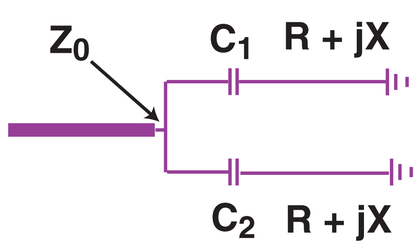

Branch impedances:

$$Z_1 = R + j\left(X - \frac{1}{\omega C_1}\right) = R + jX_1$$

$$Z_2 = R + j\left(X - \frac{1}{\omega C_2}\right) = R + jX_2$$

Input admittance at connection:

$$Y_{in} = 1/Z_1 + 1/Z_2$$

Requiring $Y_{in} = 1/Z_0$ **:**

$$X_1 = -X_2 = \sqrt{R(2Z_0 - R)}$$

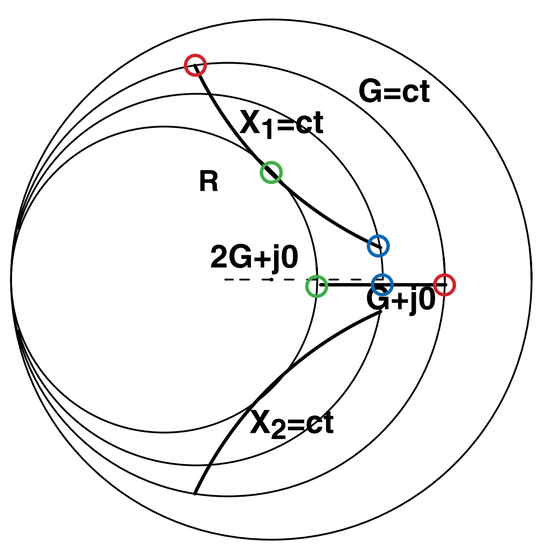

- **Assuming reactive loading constant, impedances of two lines are complex conjugate independent of resistive loading R**
- **Real part of admittance "folds over" as resistance increases, limiting change in |ρ|**

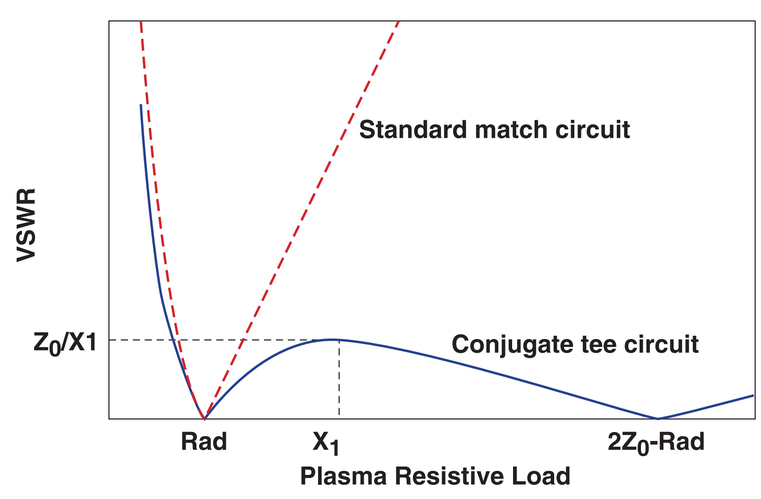

- **Maximum VSWR at R = |X_1| proportional to Z_0 : minimum match resistance should be chosen consistent with electric field limits and mechanical considerations**

ORNL 2001-1693C EFG

High Power Prototype

- One quadrant (upper left) of JET-EP ICRF antenna
- Designed to replicate electrical behavior of JET-EP antenna
- Designed to approximate thermal and mechanical behavior to the greatest extent possible
- Matching transformer, capacitors, and vacuum window identical to JET-EP designs

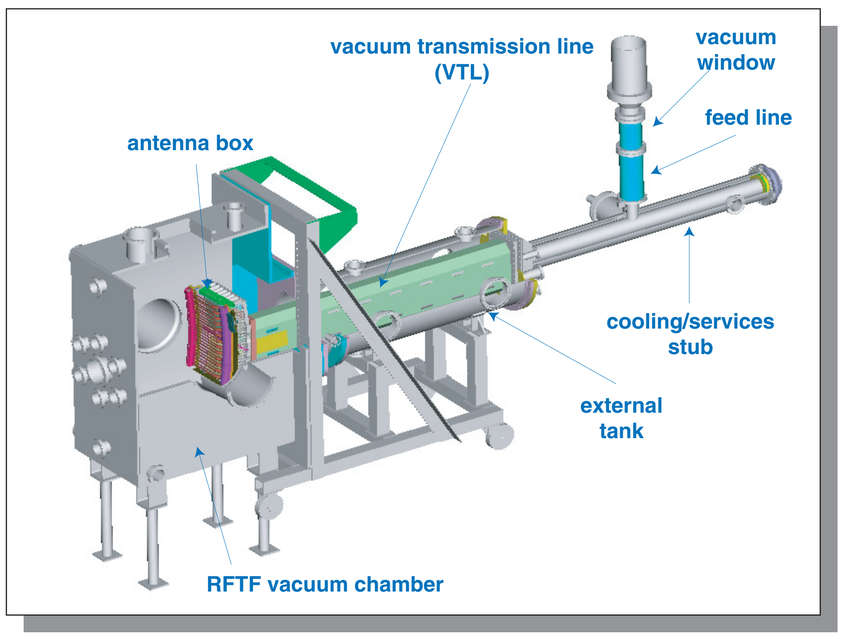

dimensions

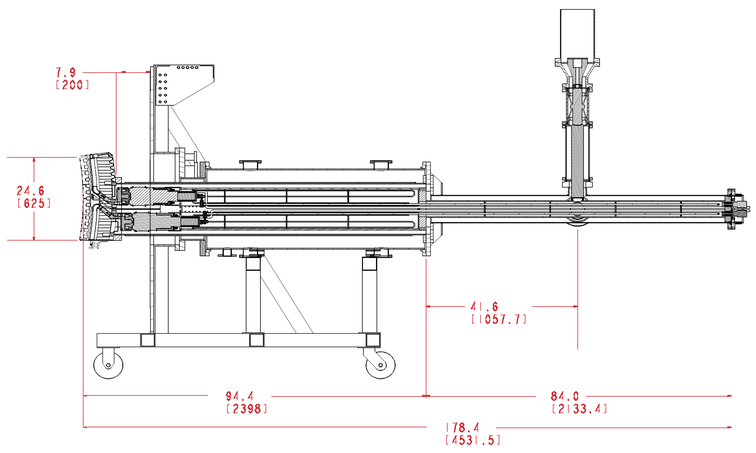

current strap configuration
(inter - strap septum not shown)

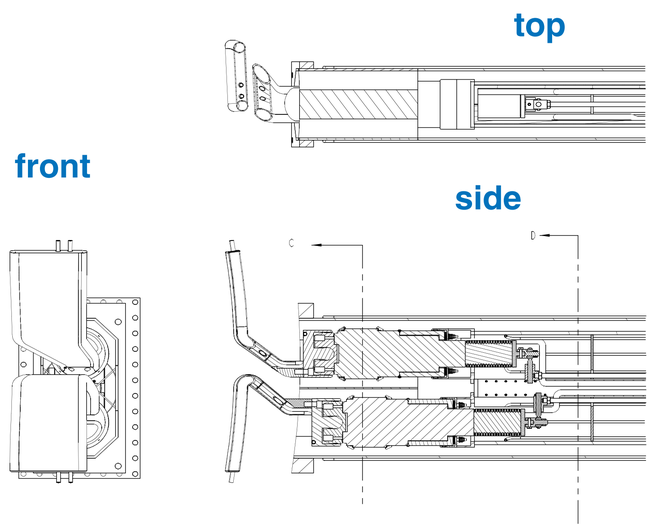

Why a High Power Prototype ?

- Test voltage limits in vacuum
- Test electrical behavior of matching circuit and transformer
- Verify expected thermal behavior of capacitor fixed end (not actively cooled)
- Investigate thermal stresses on current straps, capacitors, and VTL (possibly also Faraday shield)
- Test insertion and removal of VTL inner conductor / capacitor assembly
- Verify VTL mechanical design under gravitational and vacuum loads

Antenna box

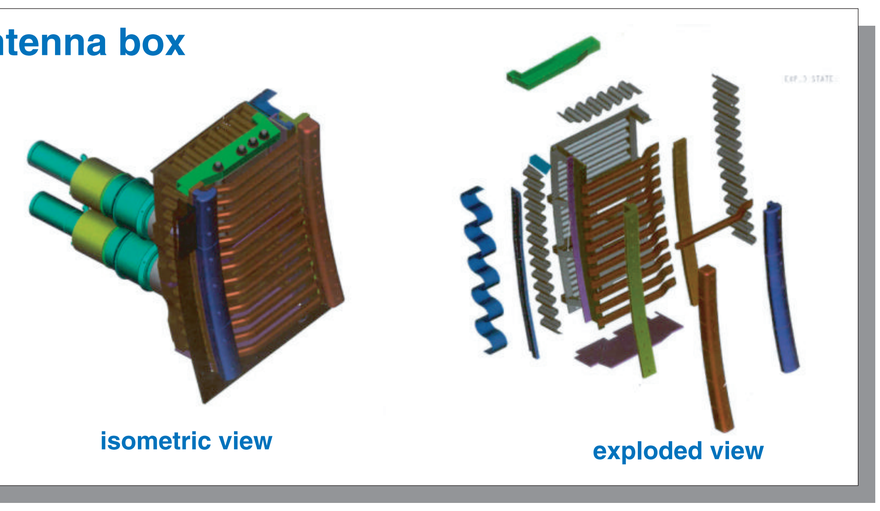

Plug-in capacitor attachment

- Multilam LA-CUT contacts designed for sliding and angular misalignment-accommodate 2.5 mm change in gap
- 5 kA rms current limit

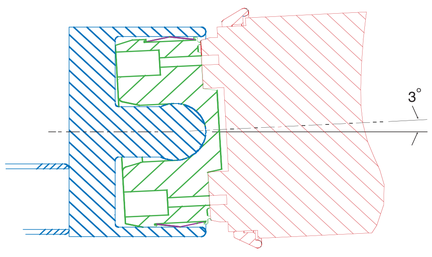

LA-CUT / 0,25 / 0
(new product)

key
capacitor
capacitor end flange
current strap flange
Multilam contacts

- Multilam application in ITER R&D stub shorting contacts

Current strap assembly steps

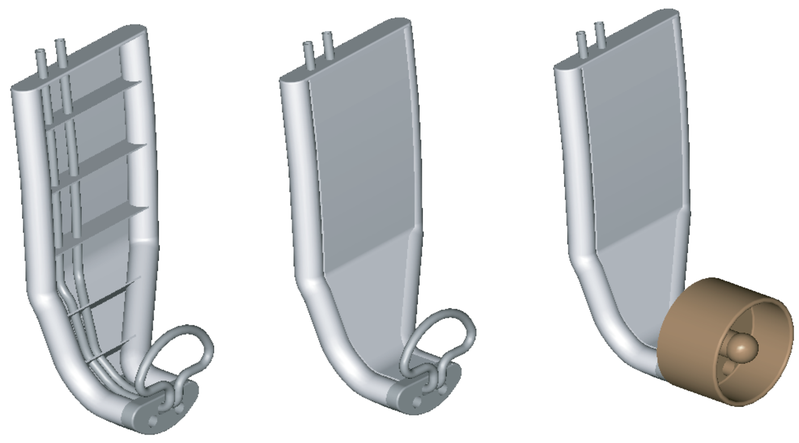

Impedance transformer cross-section length = 1.7 m

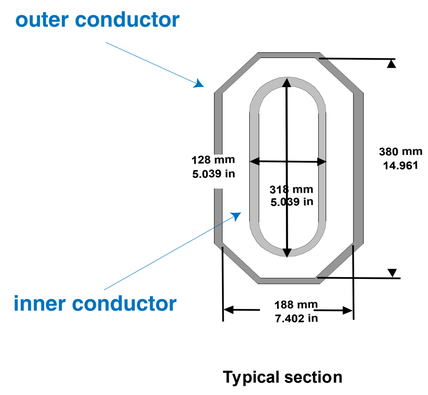

Comet CV3W-DB Capacitor

- Double bellows design operates with variable and fixed ends in vacuum as required for JET-EP antenna

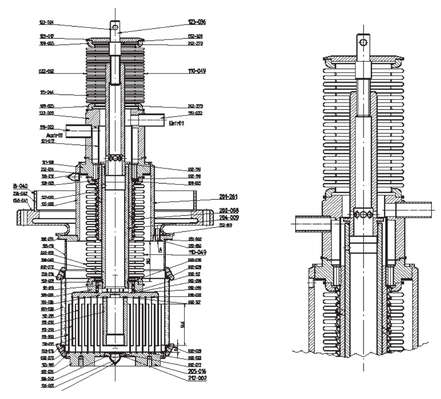

Instrumentation and Test Sequence

Instrumentation

- Voltage probes on each capacitor
- Directional coupler on the input coax
- Encoders for capacitor position
- Thermocouples for representative temperature measurements during bake-out and RF testing
- IR thermocouples for capacitor braze temperature
- Ionization gauge on end of VTL
- Flowmeters and ΔTs for calorimetry on water circuits
- IR camera monitoring Faraday shield
- Fiber-optic probes for arc detection and capacitor strain

Test Sequence

1. Capacitor high-pot testing prior to installation
2. Bench characterization of tuning settings and Q versus frequency from 30-55 MHz (with and without FS)
3. B-field mapping in front of Faraday shield at selected frequencies
4. Vacuum leak testing of full antenna assembly
5. Baking to 330°C in vacuum, followed by RF conditioning
6. Voltage handling tests at room temperature and short pulse lengths at selected frequencies
7. Long-pulse testing at operating temperature and voltage at selected frequencies (RF and thermal measurements)
8. Visual inspection of capacitors and finger contacts

Thermocouple Locations

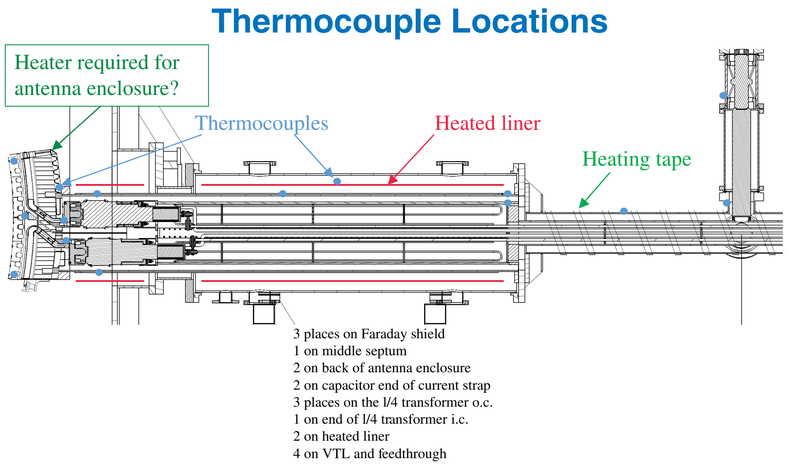

Present Schedule

Conceptual design review	Oct 12 01
Final design review	Feb 18 02
Fabrication complete	Aug 18 02
Assembly complete	Oct 02 02
Test period 1	Oct - Dec 02
Test period 2	Jan - Mar 02