Sodium Borohydride Based Power System Research

Bradley S. Richardson[1], Joseph F. Birdwell[2]
François G. Pin[1], John F. Jansen[1], and Randall F. Lind[1]

Sodium borohydride has a number of properties that makes it an excellent potential source of hydrogen. These properties include the fact that sodium borohydride reacts spontaneously with water to generate hydrogen. In addition, the rate of the reaction and the extent to which the reactants are converted to products can be increased significantly in the presence of catalysts.

Sodium borohydride-generated hydrogen can be readily coupled with a fuel cell or a hydrogen internal combustion engine. The approach addressed here involves hydrogen generated from sodium borohydride for use in a fuel cell. A hybrid approach with the fuel cell providing energy needs and peak power transients handled by an electrical storage element has been investigated. While our studies have focused on a system on the order of 500 W, this approach could be scaled up (to 10s of kilowatts) or down (to 10s of watts) as appropriate.

The figure below shows a block diagram for a power system based on this approach. The basic power system is indicated by the dashed red line.

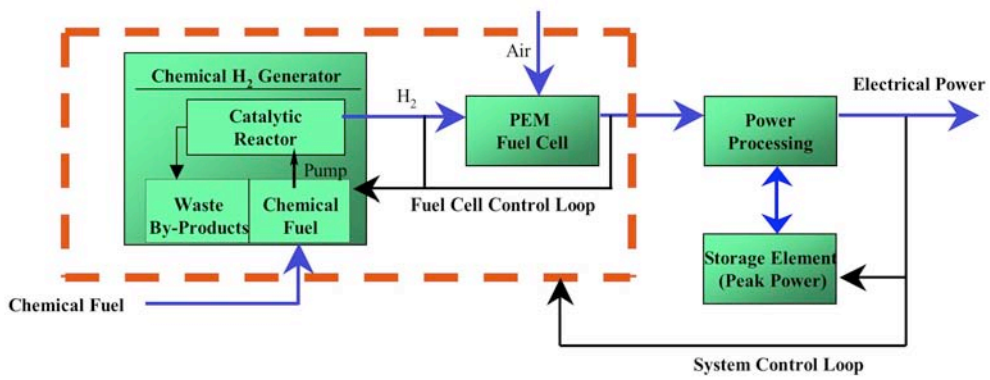

Power system block diagram. Power system is based on a fuel cell using chemically generated hydrogen to meet steady state loads and a storage element to meet peak loads.

Fixed-bed reactors can be used to provide a continuous, controllable reaction for the generation of hydrogen from sodium borohydride. The reactors consists of a hollow tube with top and bottom end caps, and screens to contain a catalyst material. The feed solution is pumped through the reactor. Upon contact with the catalyst, the hydrolysis reaction is initiated resulting in the generation of both the hydrogen gas and the reaction by-products. The

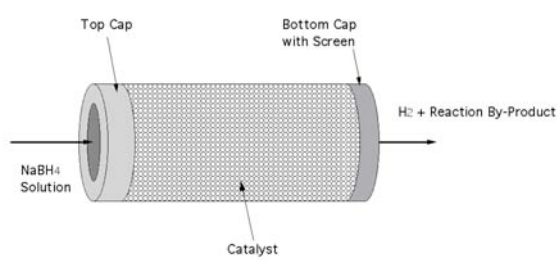

Typical Fixed Bed Reactor. This schematic shows the general design of all the ORNL reactors.

[1] Robotics and Energetic Systems Group, ESTD
[2] Process Engineering Research, NSTD

type and quantity of catalyst, the feed rate and the feed solution concentration are all key parameters in the reactor operation.

ORNL has designed and tested multiple fixed bed reactors, including a glass reactor to allow visualization of the reaction, stainless steel reactors and a horizontal reactor coiled into the lid of the by-product catch vessel.

ORNL Reactors. Glass reactor (top), stainless steel vertical reactor (lower left) and a horizontal reactor coiled into the lid of the by-product catch vessel (lower right).

A bench top hybrid system has been developed and tested in conjunction with an industrial partner, AeroVironment, Inc. The system configuration consists of four primary elements, a fuel cell, rechargeable batteries to handle peak loads, chemically generated hydrogen, and a system controller. The fuel cell is a commercially available PEM H-Power fuel cell that is nominally rated at 500 W of continuous power from 42 to 60 V. The transient handling system uses commercially available nickel-metal-hydride batteries that provided pulse power up to 1.5 kW at 42 V while being recharged from the fuel cell during periods of low demand.

This system has been used to demonstrate that chemically generated hydrogen fed to a fuel cell, integrated with batteries providing a hybrid power system can meet highly varying demands with loads up to four times the rated output. While this system has been successfully demonstrated for a specific capacity, it can be readily scaled to meet a wide range of system requirements.

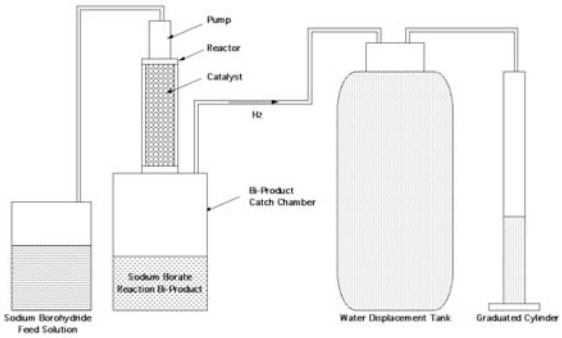

Test Setup. Reactor mounted on by-product catch vessel and test configuration for measuring the quantity of hydrogen produced using the water displacement method.

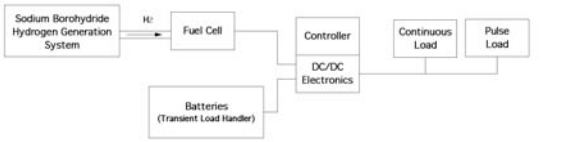

Bench-top hybrid power system. The system includes the fuel cell, hydrogen generation system, transient handler, controller, and light bank for load.

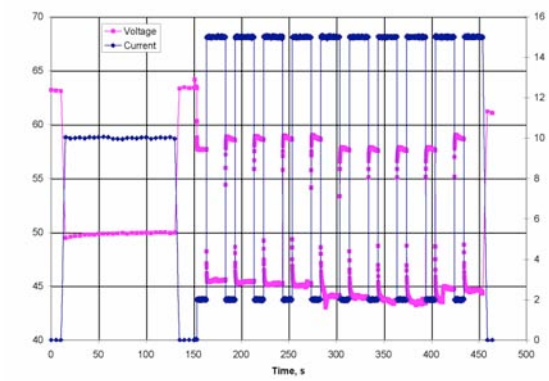

Fuel cell test data. Simulated load was varied between 100 W and 650 W. Nearly instantaneous transition between loads demonstrates excellent load following of the fuel cell.

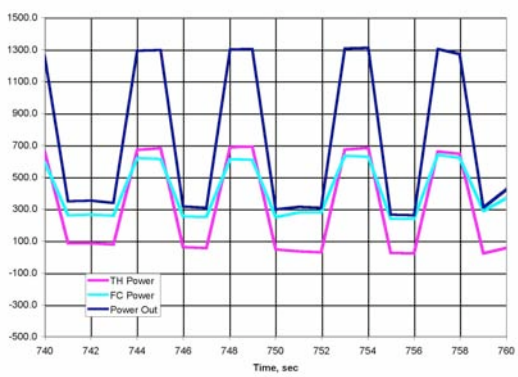

Hybrid power system test data. The fuel cell provides steady state power and the batteries provide power to meet pulses that exceed fuel cell capability. Power pulses of 1300 W are shown being met by both systems working together.

A paper on this system has been submitted to the *Journal of Power Sources* and an invention disclosure filed on various related aspects of the system.