Computer Science and Mathematics Division

Ultra-Weak Signal Sensing

Technology Impact

Optical sensing has provided important contributions to the evolution of modern technology in a variety of national security applications such as range finding, target designation, satellite tracking, and satellite communications. In many cases, when high resolution sensing is needed, an optical method must be chosen because neither radio nor ultrasonic waves can be focused as conveniently and adequately as light waves. One of the essential issues in optical sensing is the signal-to-noise ratio (SNR), which depends on (i) the intensity of the signal arriving at the detector, (ii) the detector sensitivity, and (iii) the noise level (sensing environment). We design an ultra-sensitive coherent detection system that could sense an extremely weak optical signal and achieve a high SNR level. By utilizing the amplification of light injection in a semiconductor laser, the proposed effort will enable a 1000-fold increase in sensitivity and attain an SNR level that would exceed by at least 10 dB the state-of-the-art in optical detection technology.

Advantages of the proposed technology include:

- ultrahigh sensitivity based on revolutionary techno-logy and algorithms
- high signal-to-noise ratio using heterodyne detection
- flexibility in terms of the broadest range of optical wavelengths
- scalability: use of an array of sensors to achieve better resolution
- handles time-dependent signals and enables frequency selection

Technical Concept

The detection principle of the proposed technology utilizes the amplification of light injection in a semiconductor laser. When a single-mode semiconductor laser with at the frequency ω is injected with a light at the frequency ω-Ω from another single-mode semiconductor laser, the optical spectrum of the injected laser has three frequency components: $A_0\exp(i\omega t)$, $A_f\exp[i(\omega+\Omega)t)]$, $A_r\exp[i(\omega-\Omega)t)]$. The regenerative signal $A_r\exp[i(\omega-\Omega)t)]$ at the frequency of the injection light is of particular interest since the amplitude A_r is inversely proportional to the frequency detuning, i.e., $A_r \propto 1/|\Omega|$ in certain conditions. At small frequency detunings ($\Omega << 1$), the regenerative signal A_r tremendously amplifies the injection signal.

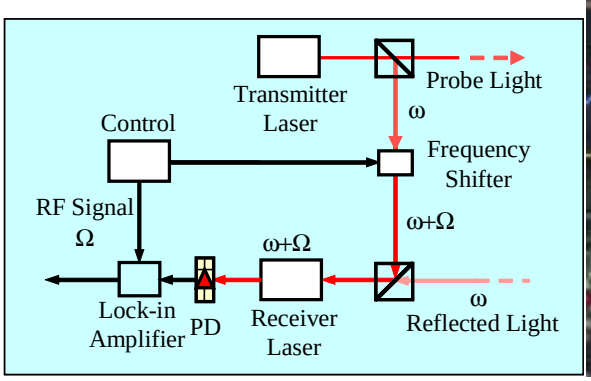

Fig. 1 Diagram of signal detection based on injection.

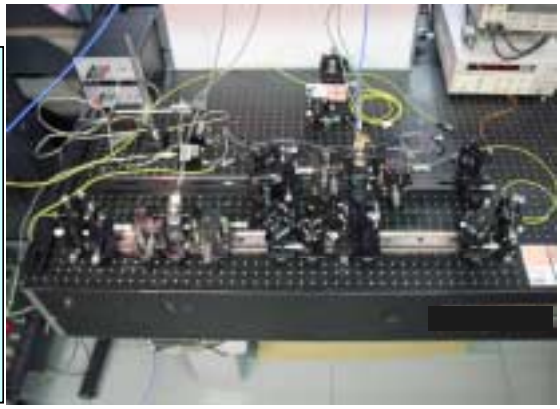

Fig. 2 Experimental setup of DFB laser injection and signal amplification.

We apply the above phenomenon to the optical sensing. The conceptual design is shown in Fig. 1. The light output from the transmitter laser is sent out as the probe beam to a remote target and the light reflected from the target will be injected into the receiver laser. Meanwhile, a portion of the transmitter laser output is shifted in frequency Ω and the shifted light is then injected into the receiver laser and locks the laser frequency to $\omega+\Omega$. When the frequency difference between the master and the receiver lasers is very small (this can easily be adjusted by controlling the frequency shifter) and the reflected light power is considerably less intense than the reference light, the receiver laser outputs both light at $\omega+\Omega$ and an amplified regenerative light signal at ω. The beat signal at the frequency Ω is detected with a lock-in amplifier and this signal gives information of interest regarding the reflected light. Due to the large amplification factor of the regenerative signal, an extremely high sensitivity can be realized. Recent experiments show that an injection light power as low as –110 dBm (i.e., 0.01 pW!) can be detected by this method. This sensitivity is 1000 times higher than any other detection method published to date.

Development Approach

Research on semiconductor laser injection has been carried out in the Center for Engineering Science Advanced Research (CESAR) at the Oak Ridge National Laboratory (ORNL) to study the fundamental properties of weak signal amplification. We have experimentally demonstrated the amplification characteristics of the regenerative signal. The sensitive dependence of the amplification coefficient on the frequency detuning has been experimentally verified and shows excellent agreement with the theoretical prediction.

Further investigation includes the following activities:

- Construct a transmitter/receiver laser pair with commercially available single-mode lasers.
- Carry out distance and Doppler velocity measurements.

ORNL Facilities

CESAR's Optical Systems laboratory has state-of-the-art equipment and facilities, including high-stability optical tables for various types of optical experiments, Ar^+ laser, titanium-sapphire pulsed femto-second laser, wavelength tunable semiconductor lasers, broad-area diode lasers and laser arrays, as well as high-precision laser controllers. Our laboratory is also quipped with various types of measurement instruments including optical spectrum analyzer, monochromator, high-frequency radio spectrum analyzer, digital oscilloscopes, power and energy meters. The existing measurement setup will be used to characterize DFB lasers used for this project and measure the spectral and temporal behavior.

Point of Contact:
Jacob Barhen
Director
Center for Engineering Science Advanced Research (CESAR)
Computer Science and Mathematics Division
Oak Ridge National Laboratory
P.O.Box 2008
Oak Ridge, TN 37831-6355
865-574-7131
barhenj@ornl.gov