REF: CORE

TGL98.V2 CHIP BLOCK DIAGRAM
I&C DIVISION - OAK RIDGE NATIONAL LABORATORY

Size	Document Number 1	Rev
Custom	TGL98.V2.SCHEMATICS DESIGNERS: W.L.BRYAN, D.JAGADISH	
Date: Monday, December 07, 1998	Sheet 1 of 1	

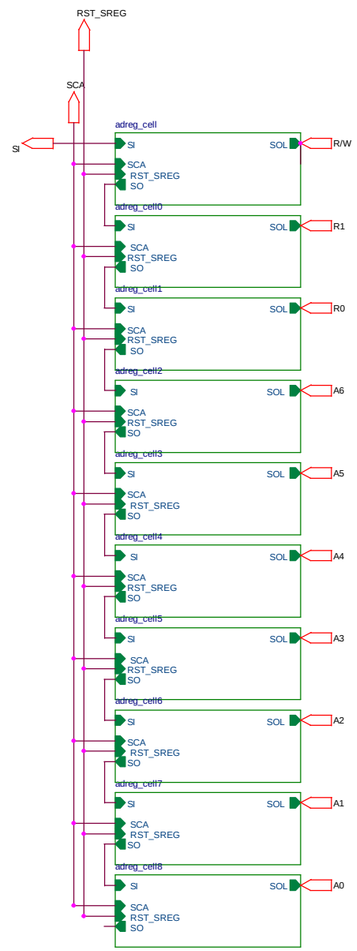

REF: ADREG

TGL98.V2 ADDRESS REGISTER I&C DIVISION - OAK RIDGE NATIONAL LABORATORY			
Size C	Document Number 24	TGL98.V2 SCHEMATICS DESIGNERS: W.L.BRYAN, U.JAGADISH	Rev
Date: Monday, December 07, 1998		Sheet 1 of 1	

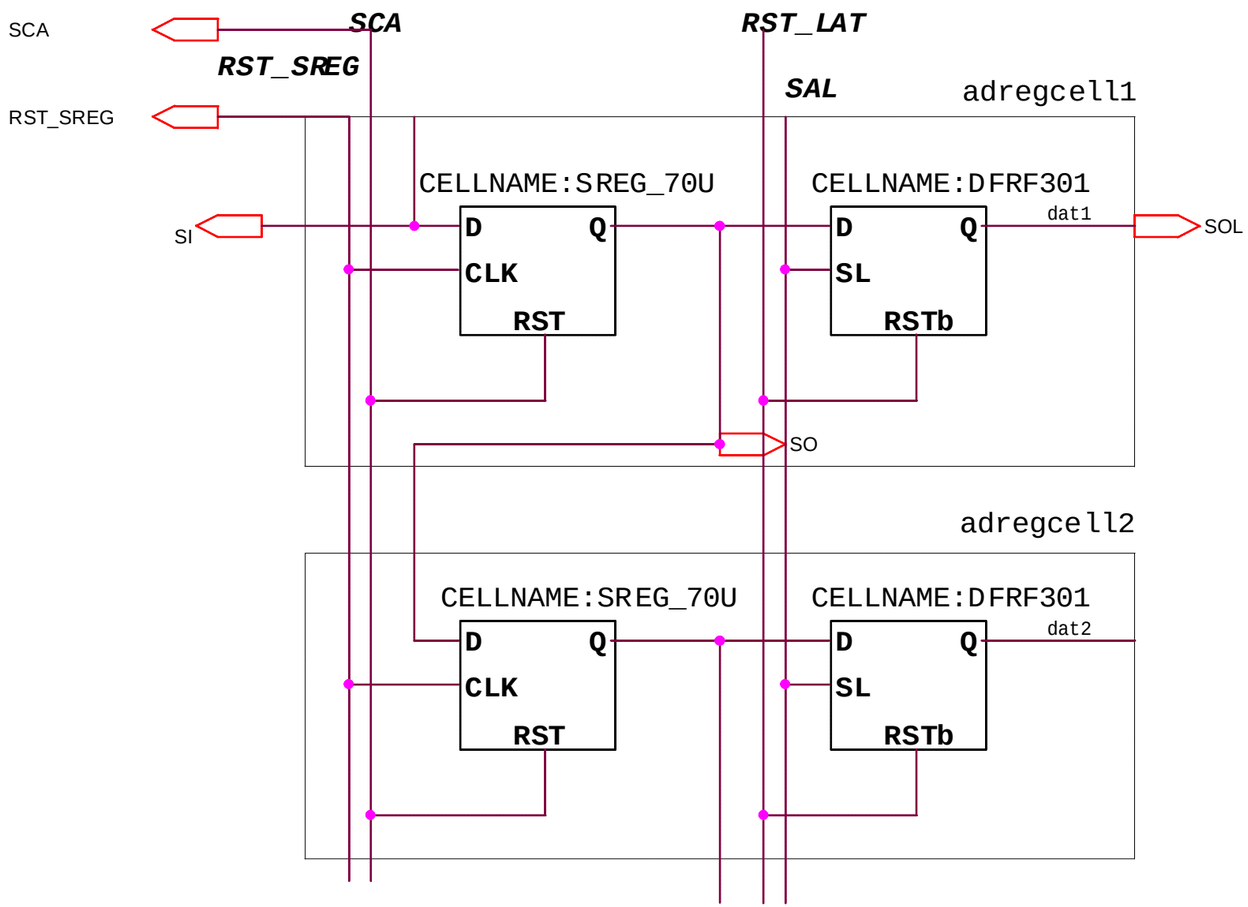

cell structure of tgl_adreg
CELLNAME:SREG_ADD

REF: ADREG_CELL

TGL98.V2 ADDRESS REGISTER CELL I&C DIVISION - OAK RIDGE NATIONAL LABORATORY			
Size A	Document Number 20	TGL98.V2 SCHEMATICS DESIGNERS: W.L.BRYAN, U.JAGADISH	Rev
Date: Monday, December 07, 1998		Sheet 1 of 1	

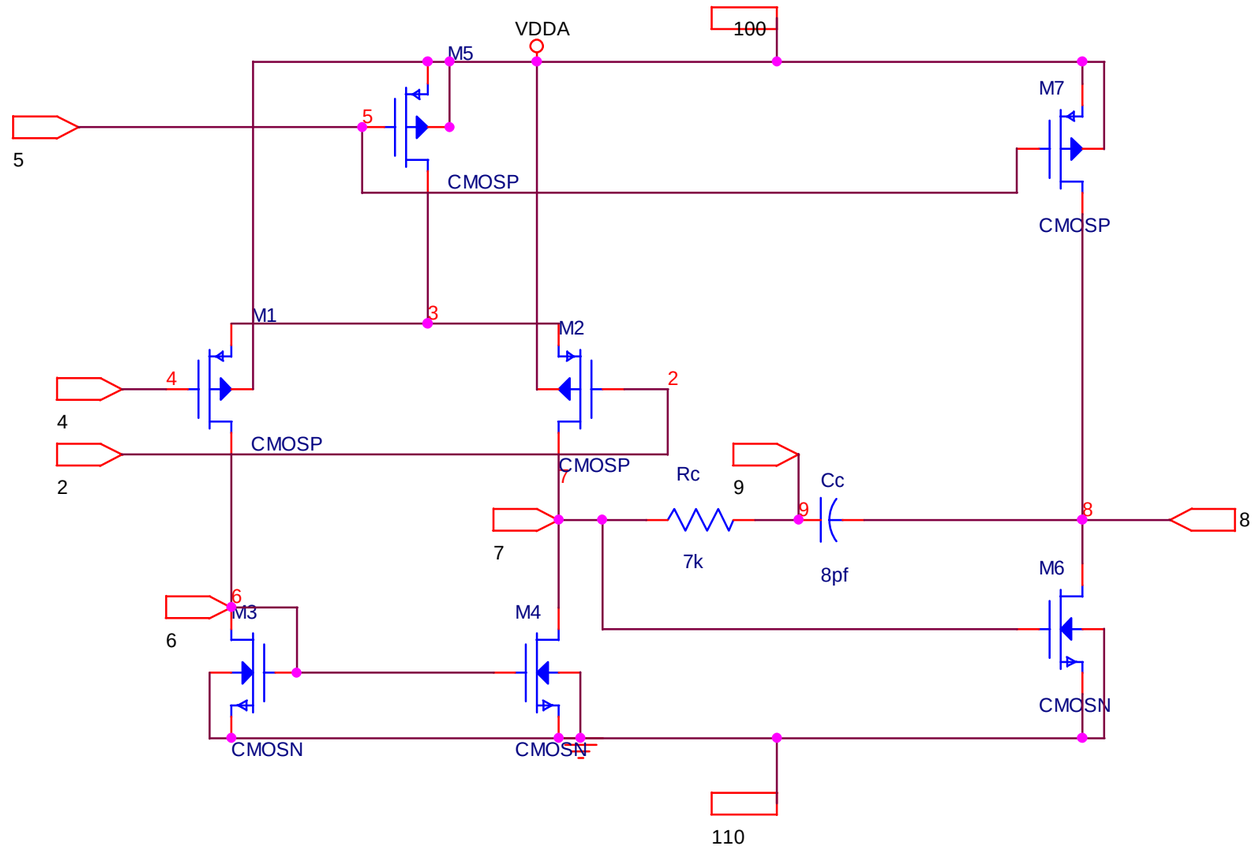

REF: AMP_DAC_P2_8PF

TGL98.V2 D/A CIRCUIT OPAMP I&C DIVISION - OAK RIDGE NATIONAL LABORATORY		
Size A	Document Number 29 TGL98.V2 SCHEMATICS DESIGNERS: M.N.ERICSON, S.FRANK, W.L.BRYAN, U.JAGADISH	Rev
Date: Tuesday, December 08, 1998	Sheet 1 of 1	

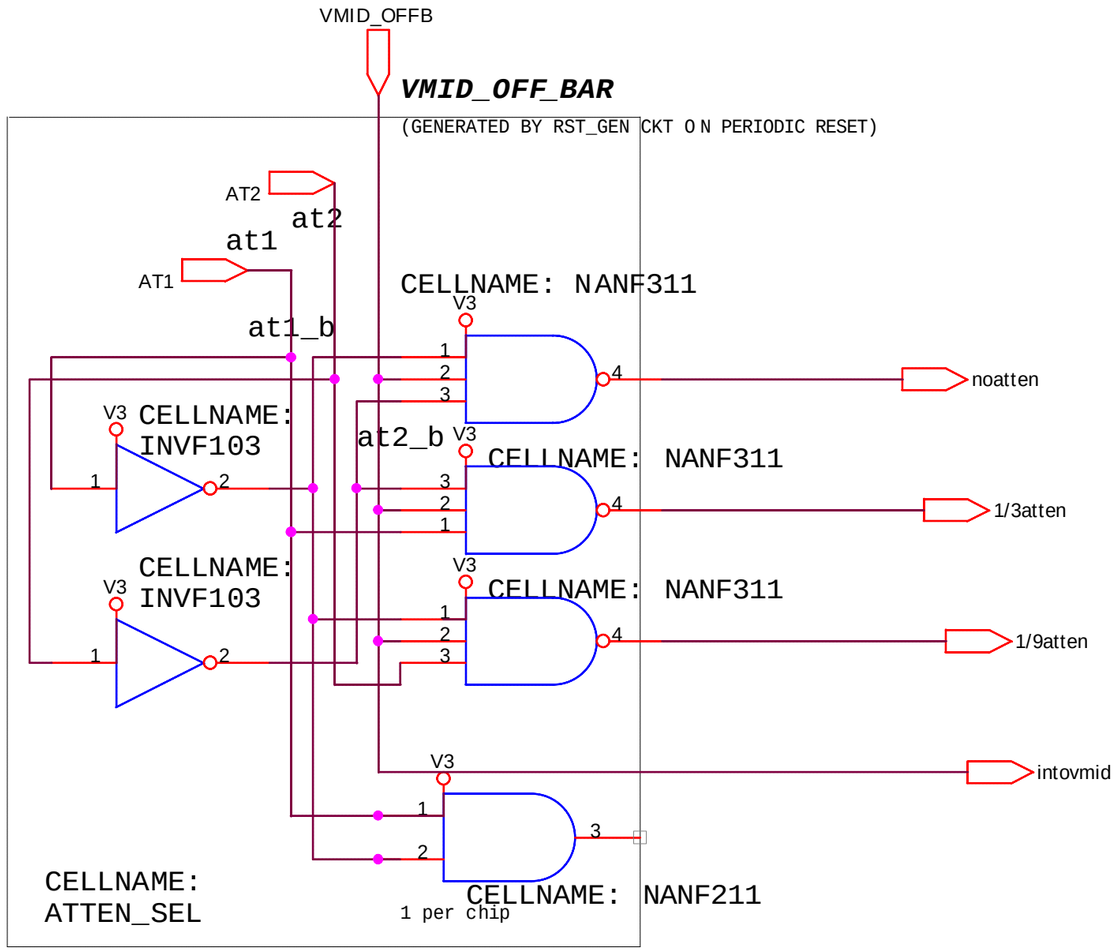

REF: ATTEN_SEL

TGL98.V2: C-R ATTENUATION SELECT LOGIC I&C DIVISION - OAK RIDGE NATIONAL LABORATORY			
Size A	Document Number 8	TGL98.V2 SCHEMATICS DESIGNERS: W.L.BRYAN, U.JAGADISH	Rev
Date: Monday, December 07, 1998		Sheet 1 of 1	

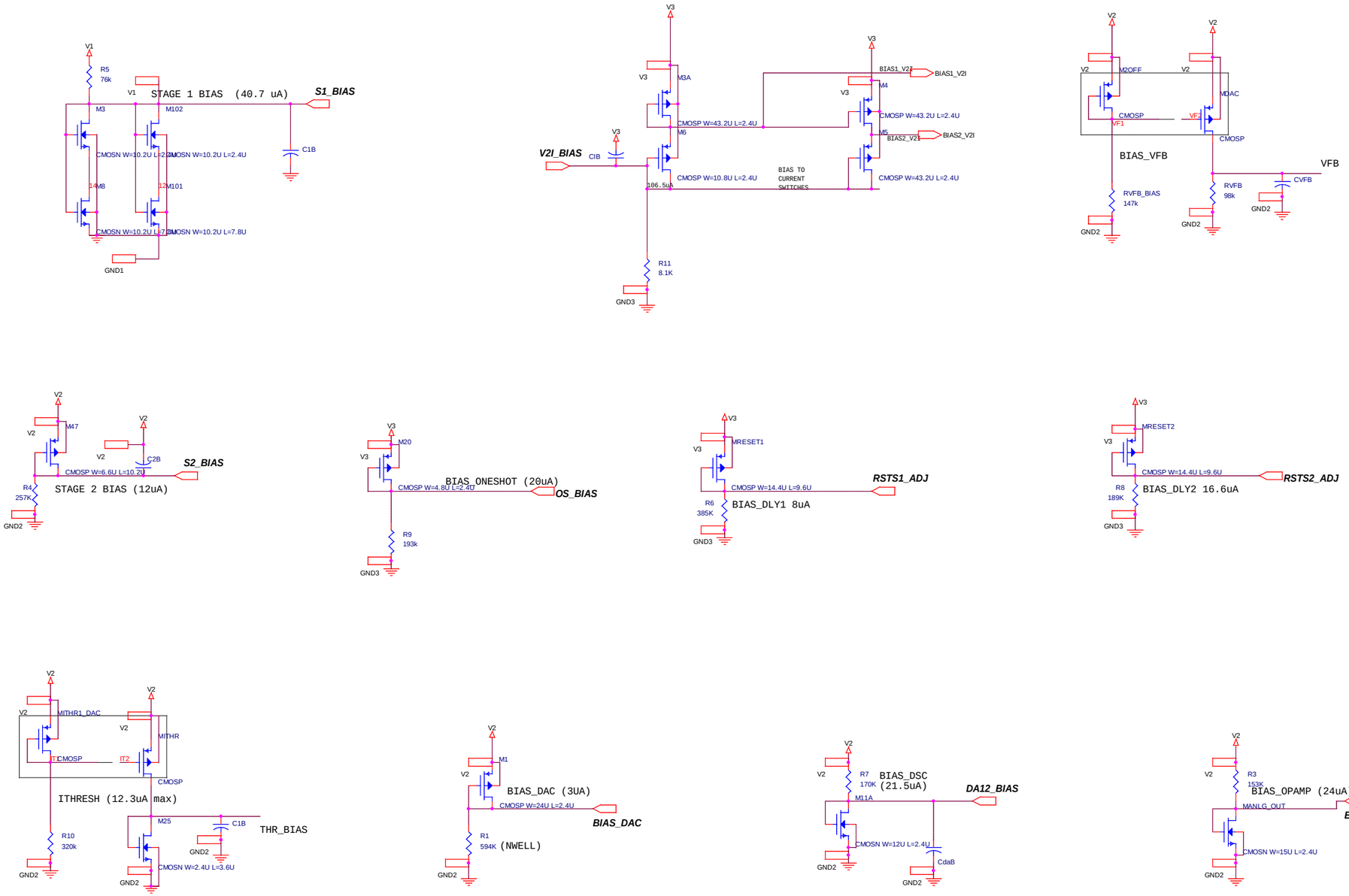

REF: BIAS_CKT

TGL98.V2 ON-CHIP BIAS GENERATOR I&C DIVISION - OAK RIDGE NATIONAL LABORATORY			
Size C	Document Number 10	TGL98.V2 SCHEMATICS DESIGNERS: W.L.BRYAN, U.JAGADISH	Rev
Date: Monday, December 07, 1998	Sheet 1 of 1		

CELL NAME: CAL

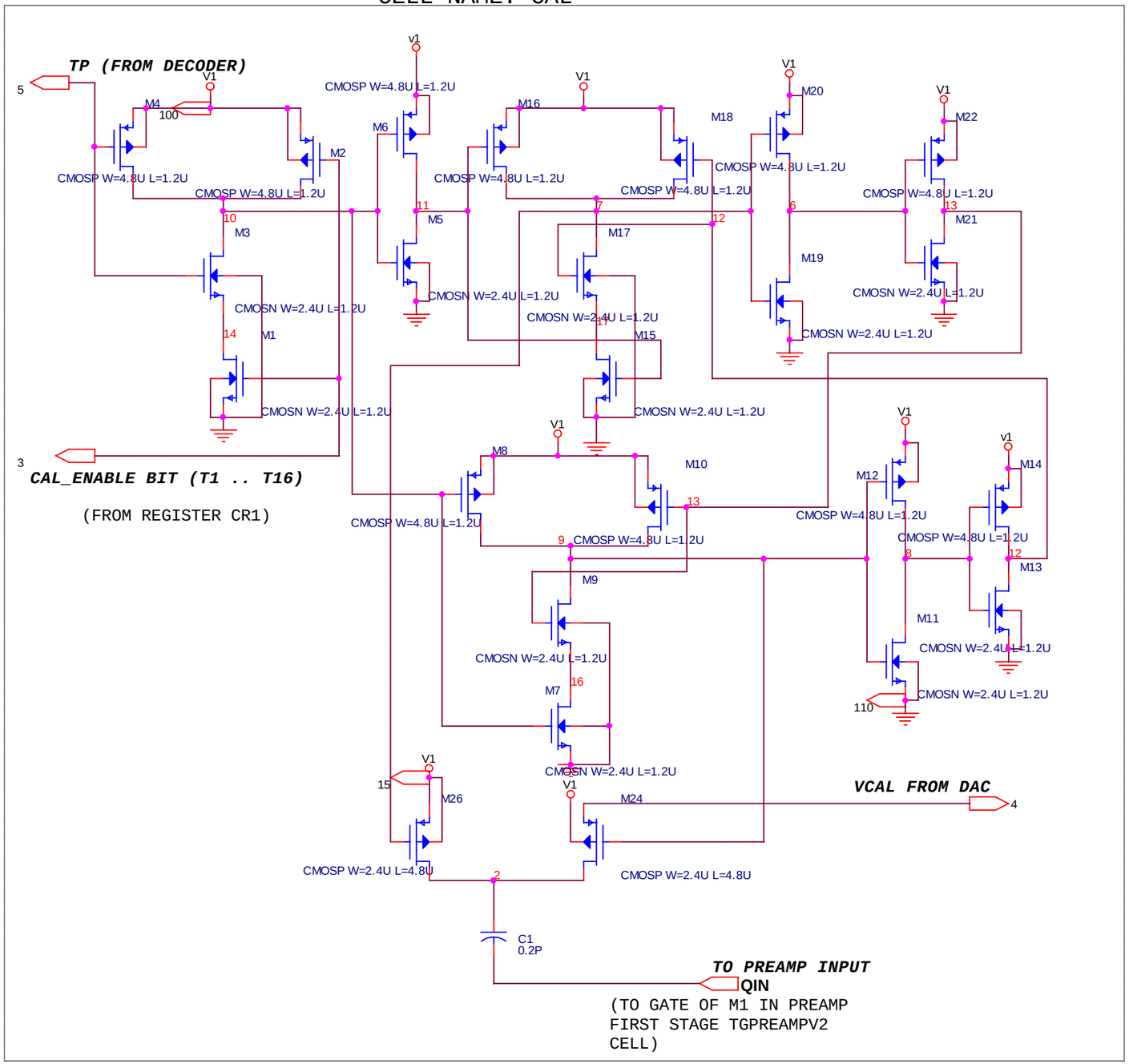

REF: CAL

TGL98.V2 TEST PULSE CALIBRATOR I&C DIVISION - OAK RIDGE NATIONAL LABORATORY		
Size B	Document Number 12 TGL98.V2 SCHEMATICS DESIGNERS: C.L.BRITTON, W.L.BRYAN, U.JAGADISH	Rev
Date: Monday, December 07, 1998	Sheet 1 of 1	

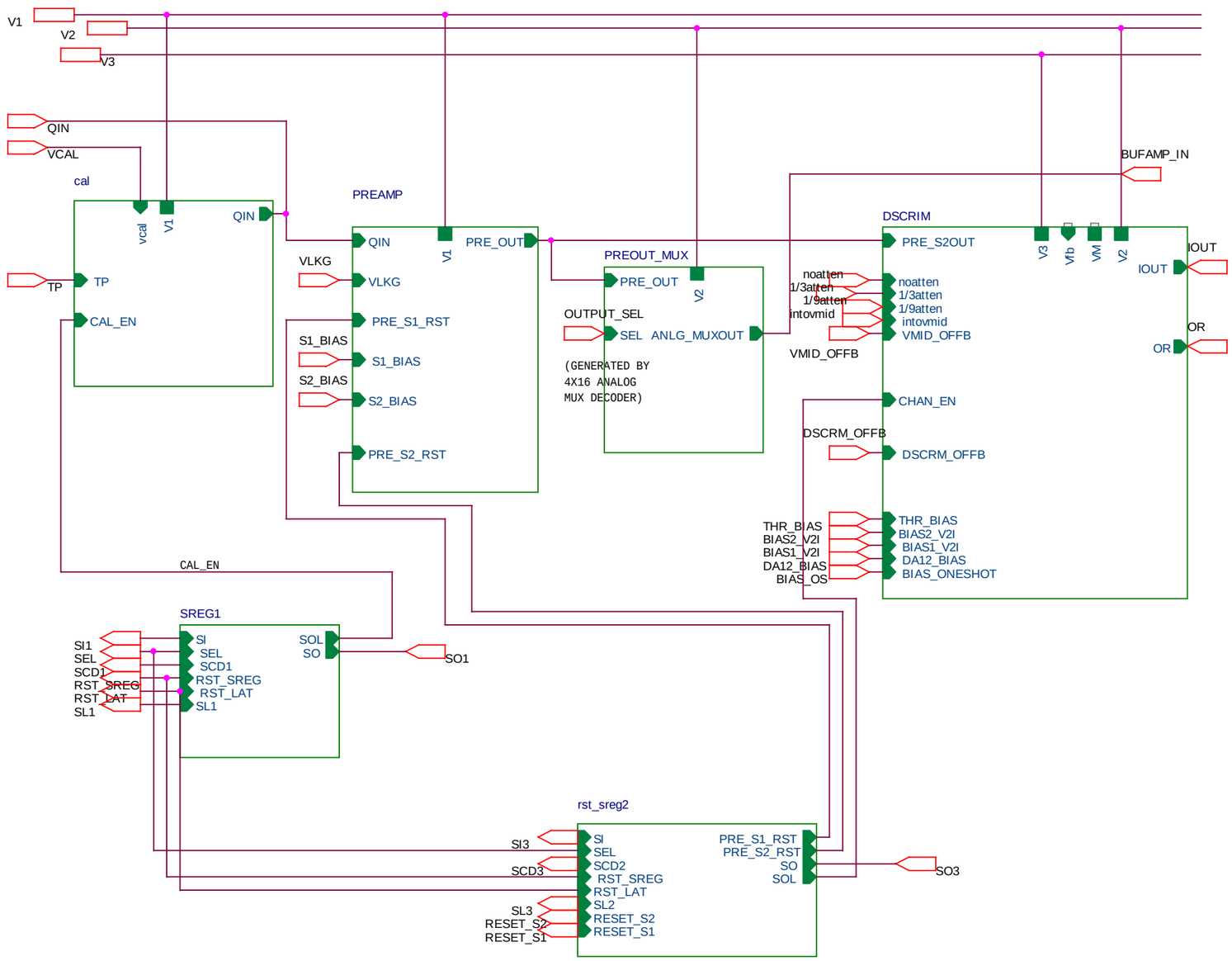

REF: CHANNEL

TGL98.V2 CHANNEL BLOCK DIAGRAM I&C DIVISION - OAK RIDGE NATIONAL LABORATORY		
Size B	Document Number 11 TGL98.V2 SCHEMATICS DESIGNERS: W.L.BRYAN, U.JAGADISH	Rev
Date: Monday, December 07, 1998	Sheet 1 of 1	

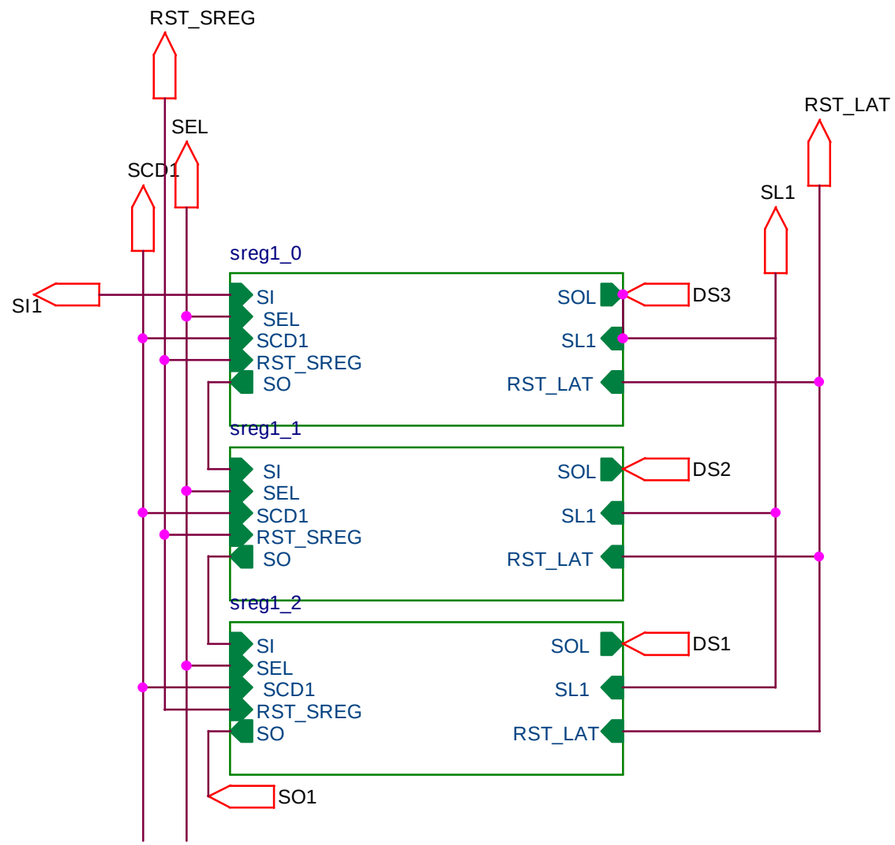

REF: CR1_PARTB

TGL98.V2 LEAKAGE SLOPE MUX BITS I&C DIVISION - OAK RIDGE NATIONAL LABORATORY			
Size A	Document Number 25	TGL98.V2 SCHEMATICS DESIGNERS: W.L.BRYAN, U.JAGADISH	Rev
Date: Monday, December 07, 1998		Sheet 1 of 1	

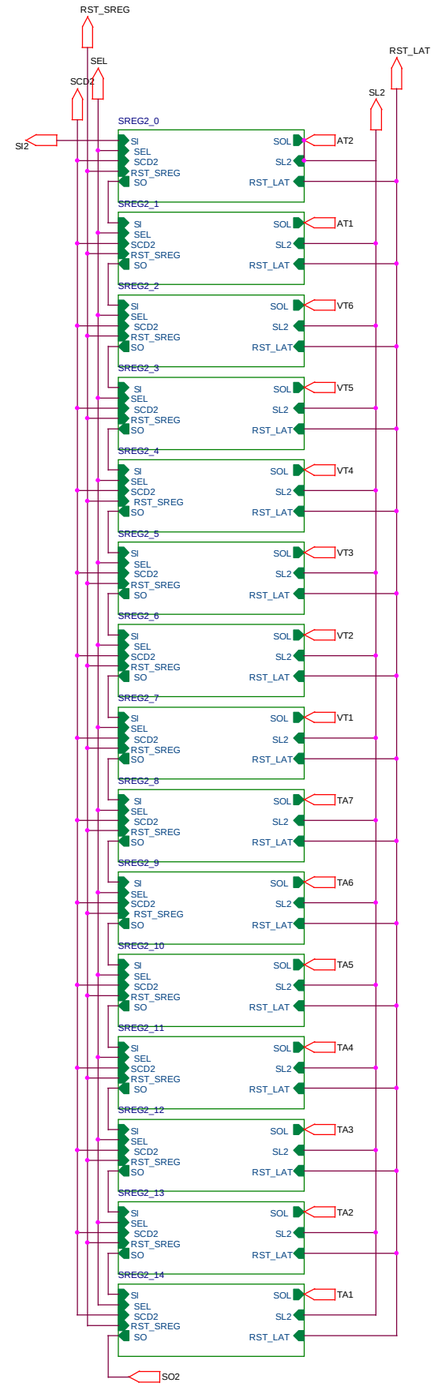

REF: CR2

TGL98.V2 CR2 REGISTER I&C DIVISION - OAK RIDGE NATIONAL LABORATORY			
Size C	Document Number 26	TGL98.V2 SCHEMATICS DESIGNERS: W.L.BRYAN, U.JAGADISH	Rev
Date: Monday , December 07, 1998		Sheet 1 of 1	

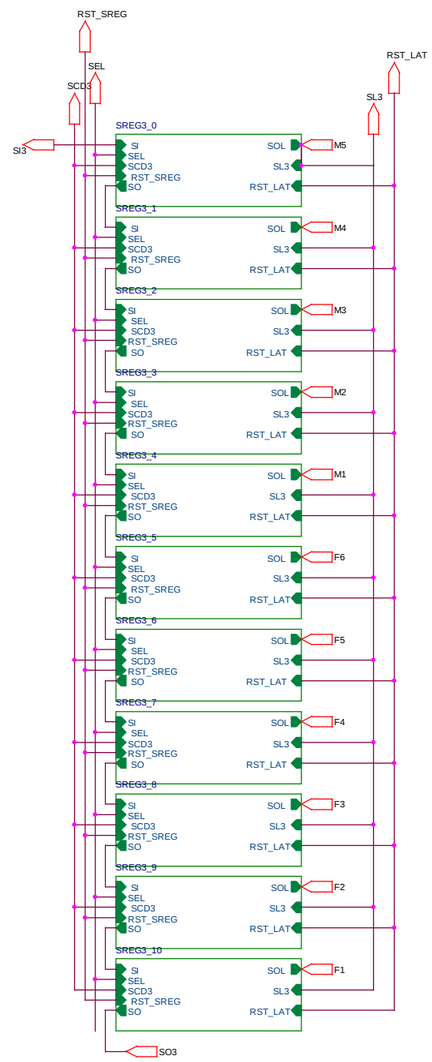

REF: CR3_PARTB

TGL98.V2 OUTPUT MUX AND FEEDBACK VOLTAGE SELECT BITS I&C DIVISION - OAK RIDGE NATIONAL LABORATORY			
Size C	Document Number 27	TGL98.V2 SCHEMATICS DESIGNERS: W.L.BRYAN, U.JAGADISH	Rev
Date: Monday, December 07, 1998		Sheet 1 of 1	

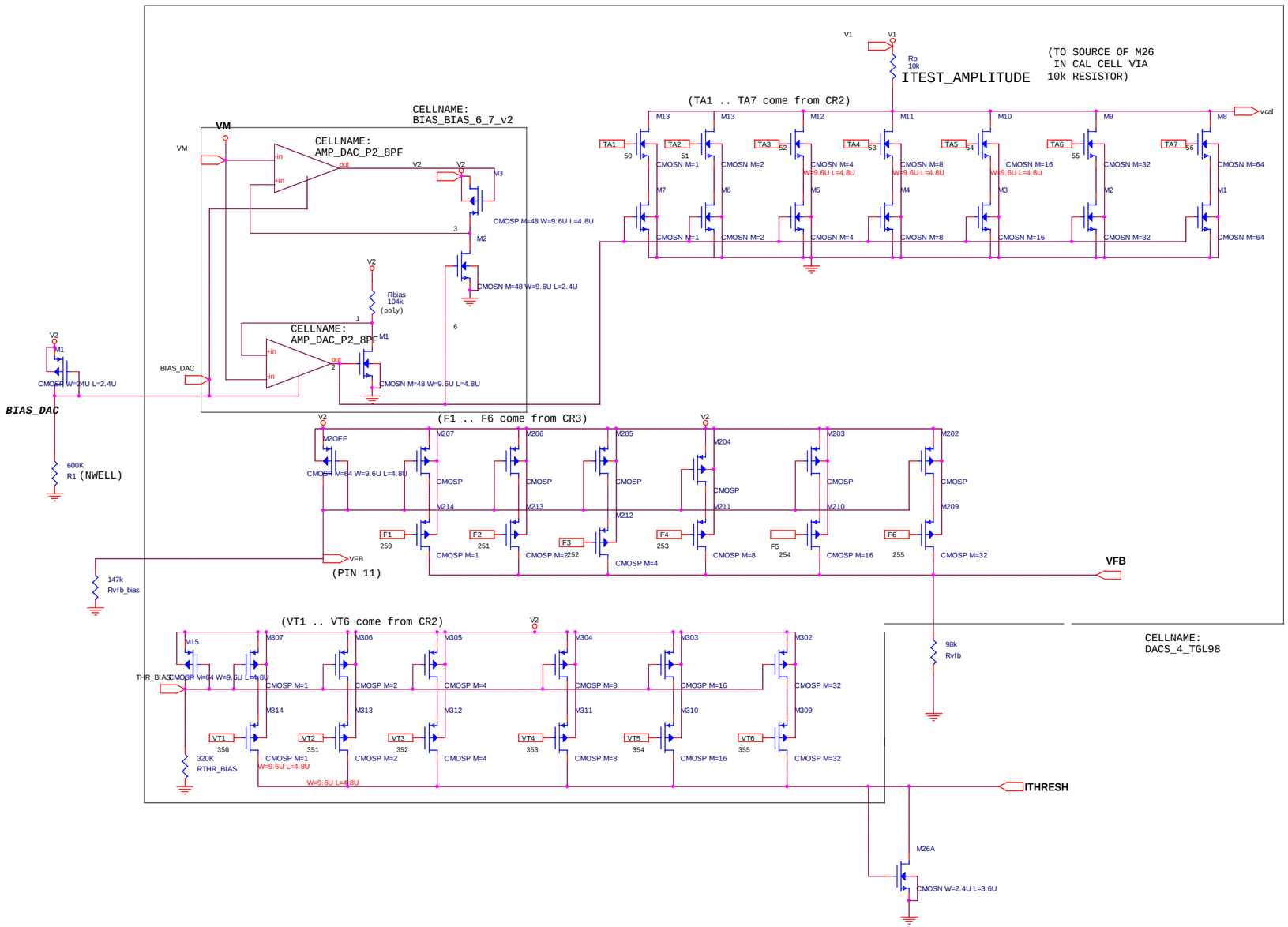

REF: DACS

TGL98.V2 D/A CONVERTER DIAGRAM
I&C DIVISION - OAK RIDGE NATIONAL LABORATORY

Size	Document Number	Rev
C	5 TGL98.V2 SCHEMATICS	

DESIGNERS: M.N.ERICSON, S.FRANK, W.L.BRYAN, U.JAGADISH

Date: Monday, December 07, 1998 Sheet 1 of 1

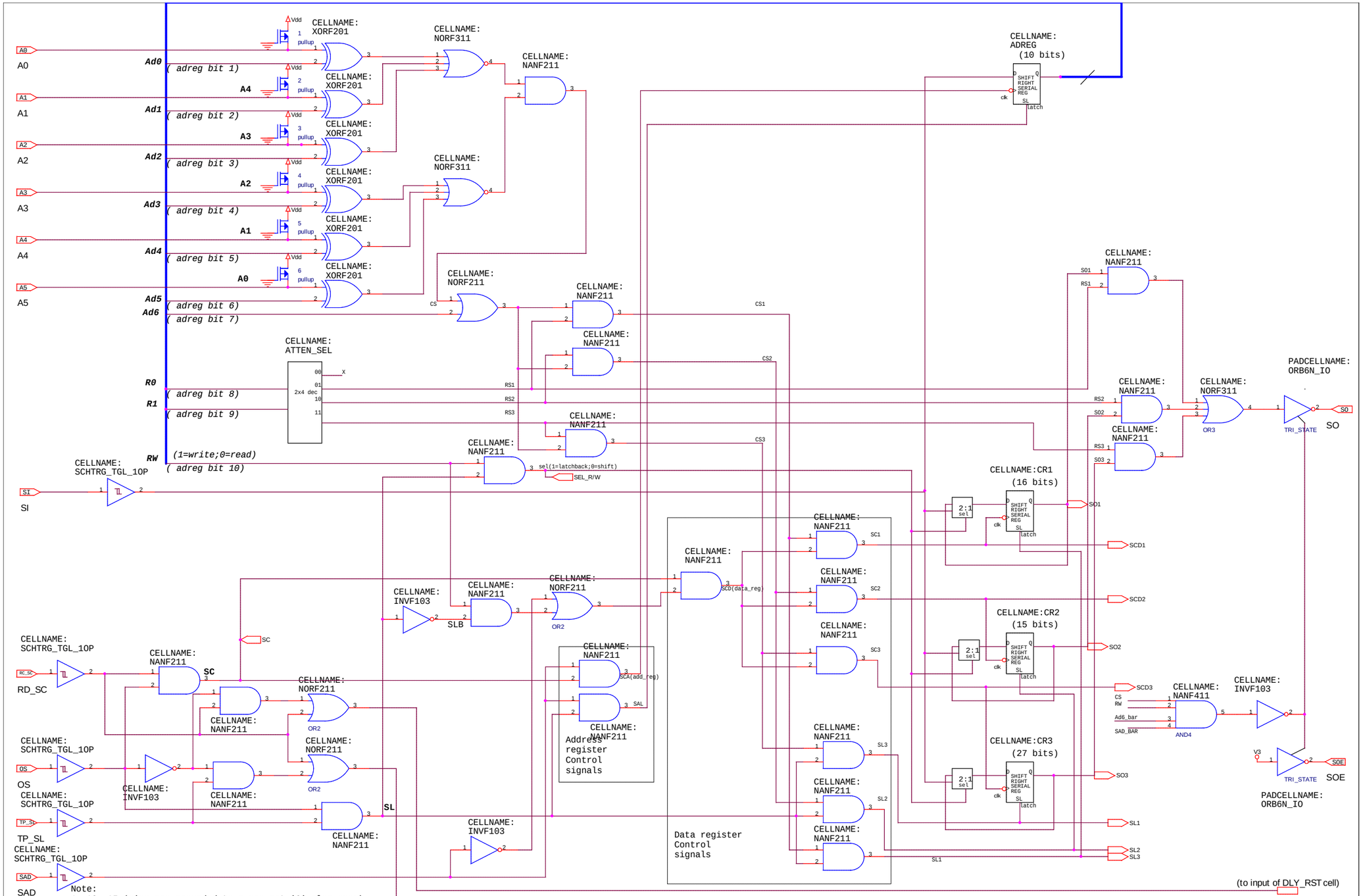

Note:
1. A0..A5 (pins are grounded to represent '0' else open)
2. SC,SL,SI,SO,SAD are pin signals through schmidt triggers
3. Ad0..Ad6,RW,R0,R1 are address register contents
4. All other signal names are internal controls
5. Registers are latched shift registers
6. SAD = '1' impiles address mode; else data mode
7. OS = '1' implies serial mode; else operating mode
8. RD_SC = Serial clock if OS = '1' ; else preamp stage1 reset
9. TP_SL = Serial Latch if OS = '1' ; else Test pulse signal
10. SOE = '0' for chip to receive data; '1' when chip transmits data

REF: DECODER

TGL98.V2 DECODER LOGIC
I&C DIVISION - OAK RIDGE NATIONAL LABORATORY

Size	Document Number	Rev
C	3 TGL98.V2 SCHEMATICS DESIGNERS: W.L.BRYAN, U.JAGADISH	

Date: Tuesday, December 08, 1998 Sheet 1 of 1

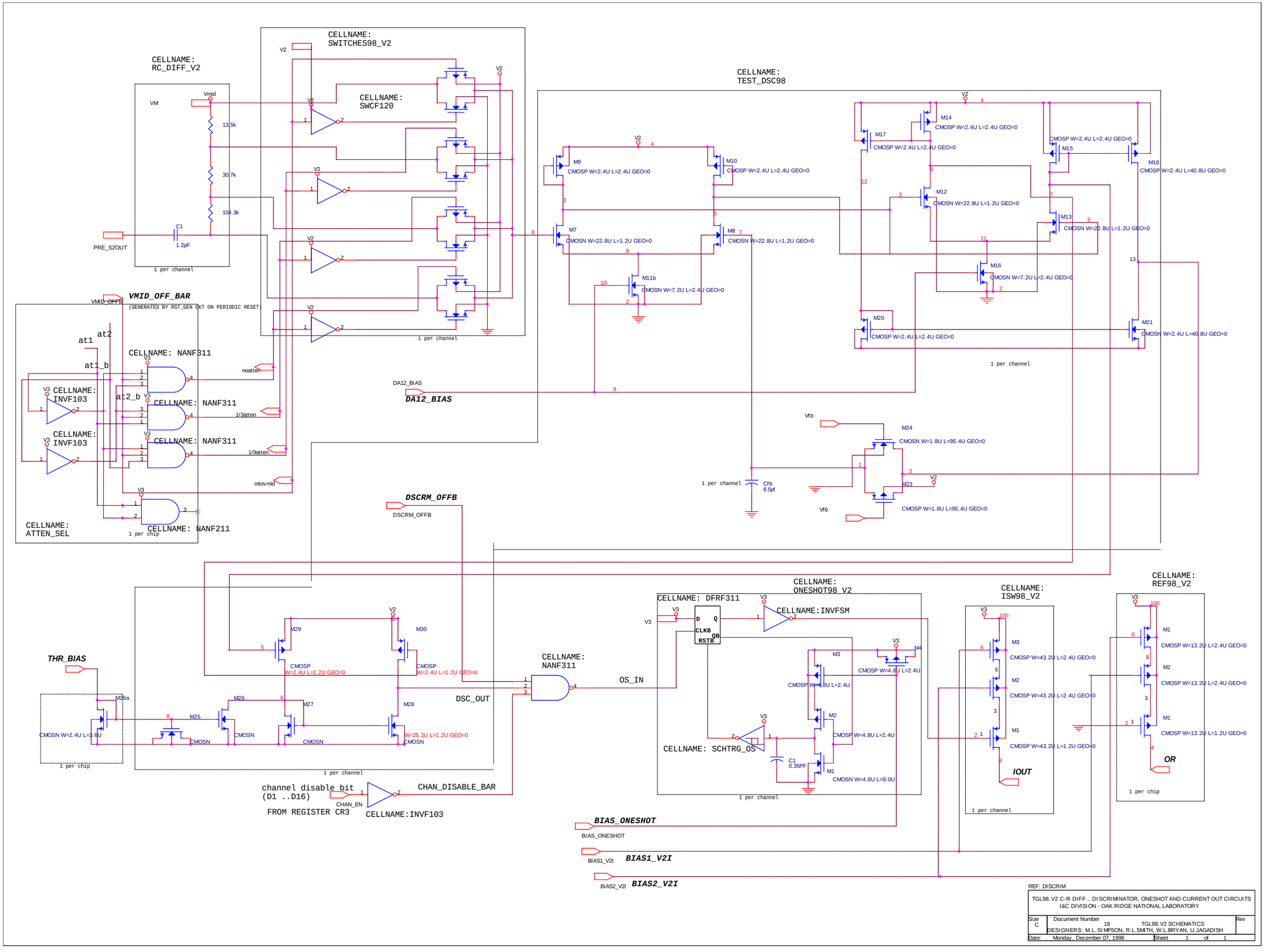
CELLNAME: RC_DIFF_V2
VM
Vmid
13.5k
30.7k
104.3k
C1
1.2pF
PRE_S2OUT
1 per channel
CELLNAME: SWITCHES98_V2
CELLNAME: SWCF120
V2
1 per channel
CELLNAME: TEST_DSC98
M9
CMOSP W=2.4U L=2.4U GEO=0
M10
CMOSP W=2.4U L=2.4U GEO=0
M7
CMOSN W=22.8U L=1.2U GEO=0
M8
CMOSN W=22.8U L=1.2U GEO=0
M11b
CMOSN W=7.2U L=2.4U GEO=0
M14
CMOSP W=2.4U L=2.4U GEO=0
M17
CMOSP W=2.4U L=2.4U GEO=0
M15
CMOSP W=2.4U L=2.4U GEO=0
M18
CMOSP W=2.4U L=40.8U GEO=0
M12
CMOSN W=22.8U L=1.2U GEO=0
M13
CMOSN W=22.8U L=1.2U GEO=0
M16
CMOSN W=7.2U L=2.4U GEO=0
M20
CMOSP W=2.4U L=2.4U GEO=0
M21
CMOSN W=2.4U L=40.8U GEO=0
1 per channel
VMID_OFFB
VMID_OFF_BAR
(GENERATED BY RST_GEN CKT ON PERIODIC RESET)
at1
at2
at1_b
at2_b
CELLNAME: NANF311
CELLNAME: INVF103
noatten
1/3atten
1/9atten
intovmid
CELLNAME: NANF211
CELLNAME: ATTEN_SEL
1 per chip
DA12_BIAS
DA12_BIAS
Vfb
M24
CMOSN W=1.8U L=95.4U GEO=0
M23
CMOSP W=1.8U L=95.4U GEO=0
1 per channel
Cfb
8.5pf
DSCRM_OFFB
DSCRM_OFFB
THR_BIAS
M26a
CMOSN W=2.4U L=3.6U
M25
M26
M27
M28
M29
M30
CMOSP W=2.4U L=1.2U GEO=0
CMOSP W=2.4U L=1.2U GEO=0
W=25.2U L=1.2U GEO=0
CMOSN
1 per chip
1 per channel
DSC_OUT
CELLNAME: NANF311
OS_IN
CELLNAME: ONESHOT98_V2
CELLNAME: DFRF311
D
Q
CLKB
QB
RSTB
CELLNAME:INVFSM
M3
M4
CMOSP W=4.8U L=2.4U
M2
CMOSP W=4.8U L=2.4U
M1
CMOSN W=4.8U L=9.0U
CELLNAME: SCHTRG_OS
C1
0.35PF
1 per channel
CELLNAME: ISW98_V2
M3
CMOSP W=43.2U L=2.4U GEO=0
M2
CMOSP W=43.2U L=2.4U GEO=0
M1
CMOSP W=43.2U L=1.2U GEO=0
IOUT
1 per channel
CELLNAME: REF98_V2
M1
CMOSP W=13.2U L=2.4U GEO=0
M2
CMOSP W=13.2U L=2.4U GEO=0
M1
CMOSP W=13.2U L=1.2U GEO=0
OR
1 per chip
channel disable bit
(D1 ..D16)
FROM REGISTER CR3
CHAN_EN
CELLNAME:INVF103
CHAN_DISABLE_BAR
BIAS_ONESHOT
BIAS_ONESHOT
BIAS1_V2I
BIAS1_V2I
BIAS2_V2I
BIAS2_V2I
REF: DISCRIM
TGL98.V2 C-R DIFF., DISCRIMINATOR, ONESHOT AND CURRENT OUT CIRCUITS
I&C DIVISION - OAK RIDGE NATIONAL LABORATORY
Size C
Document Number 18
TGL98.V2 SCHEMATICS
Rev
DESIGNERS: M.L. SIMPSON, R.L.SMITH, W.L.BRYAN, U.JAGADISH
Date: Monday, December 07, 1998
Sheet 1 of 1

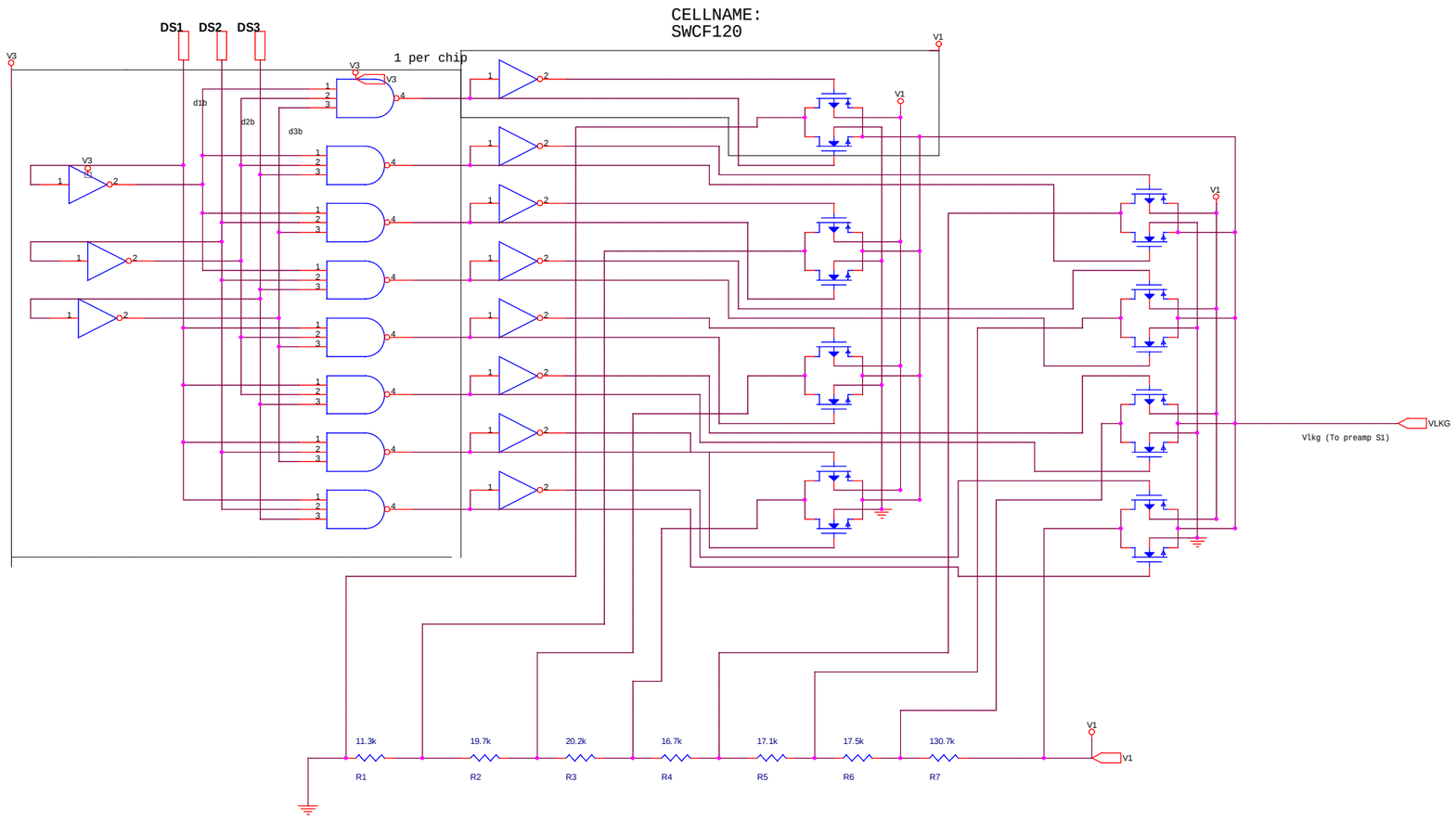

REF: LKG_GEN

TGL98.V2 VLKG SLOPE SELECT CIRCUIT I&C DIVISION - OAK RIDGE NATIONAL LABORATORY			
Size C	Document Number 9	TGL98.V2 SCHEMATICS DESIGNERS: W.L.BRYAN, U.JAGADISH	Rev
Date: Monday, December 07, 1998		Sheet 1 of 1	

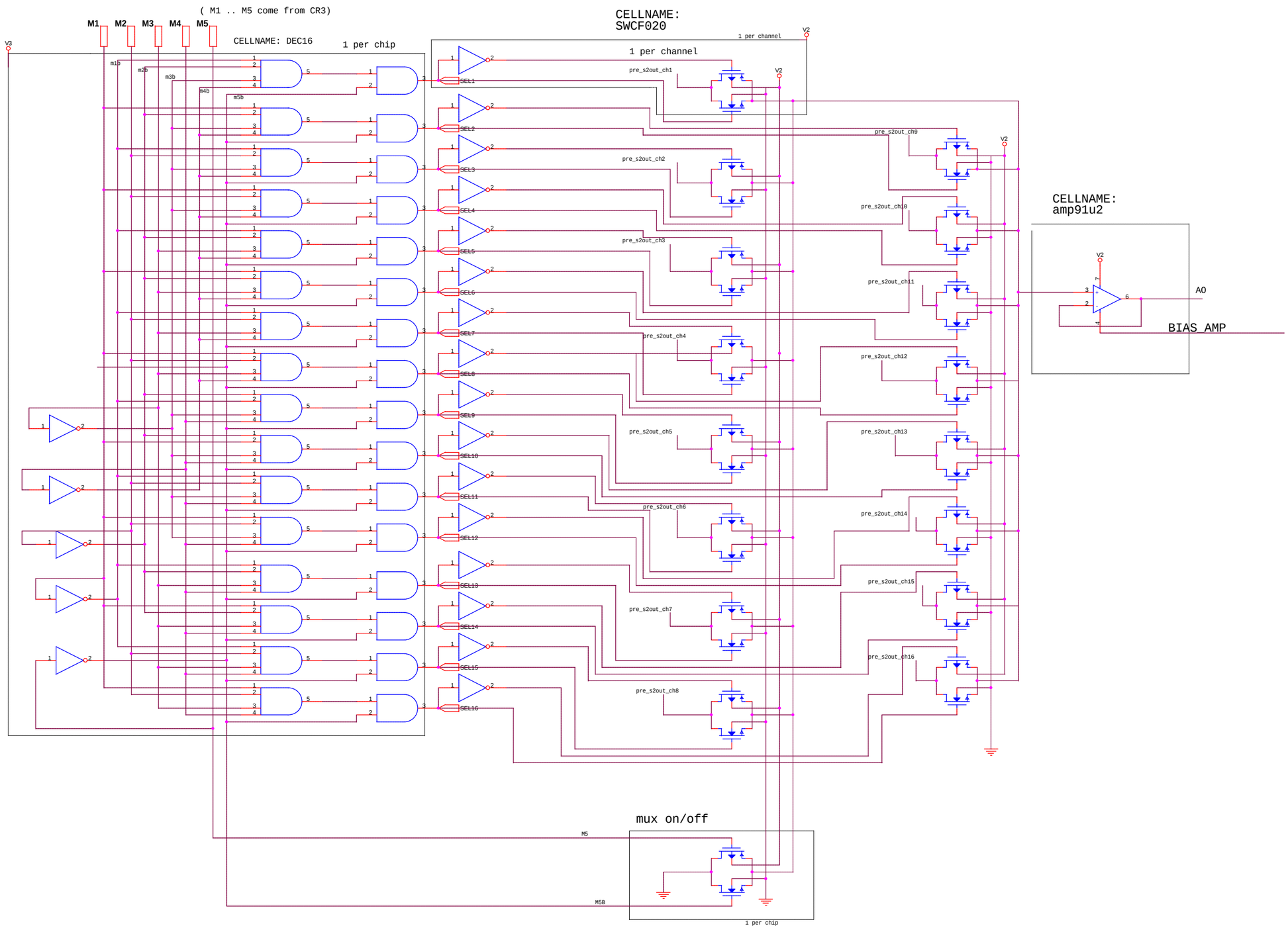

REF: OUTPUTSEL_DECODER

TGL98.V2 PREAMP OUTPUT SELECT MUX I&C DIVISION - OAK RIDGE NATIONAL LABORATORY			
Size C	Document Number 6	TGL98.V2 SCHEMATICS DESIGNERS: W.L.BRYAN, U.JAGADISH	Rev
Date: Monday, December 07, 1998		Sheet 1 of 1	

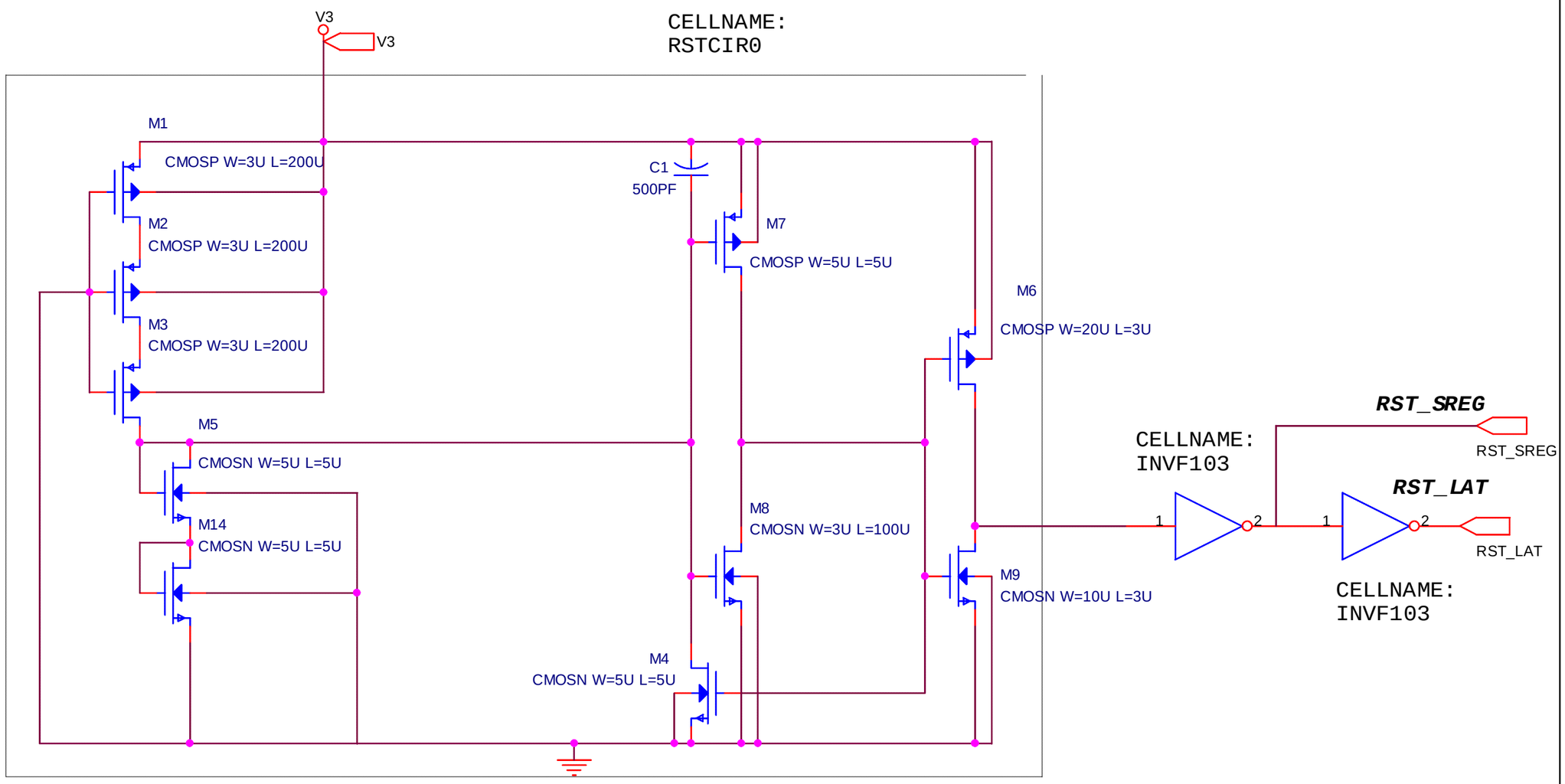

REF: POWON_RST

TGL98.V2 POWER ON RESET CIRCUITRY
I&C DIVISION - OAK RIDGE NATIONAL LABORATORY

Size	Document Number	Rev
A	2 TGL98.V2 SCHEMATICS DESIGNERS: J.ROCHELLE, L.G.CLONTS	

Date: Tuesday, December 08, 1998 Sheet 1 of 1

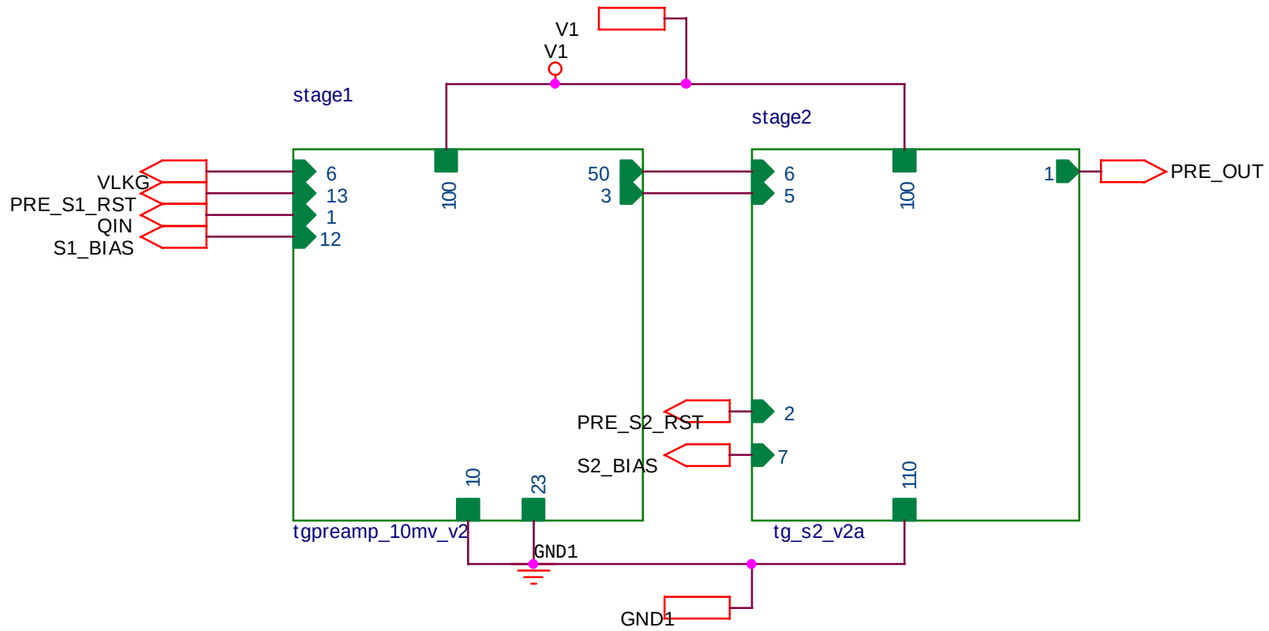

REF: PREAMP

TGL98.V2 PREAMP CIRCUIT I&C DIVISION - OAK RIDGE NATIONAL LABORATORY		
Size A	Document Number 13 TGL98.V2 SCHEMATICS DESIGNERS: C.L.BRITTON, W.L.BRYAN, U.JAGADISH	Rev
Date: Monday, December 07, 1998	Sheet 1 of 1	

CELLNAME:
SWCF020

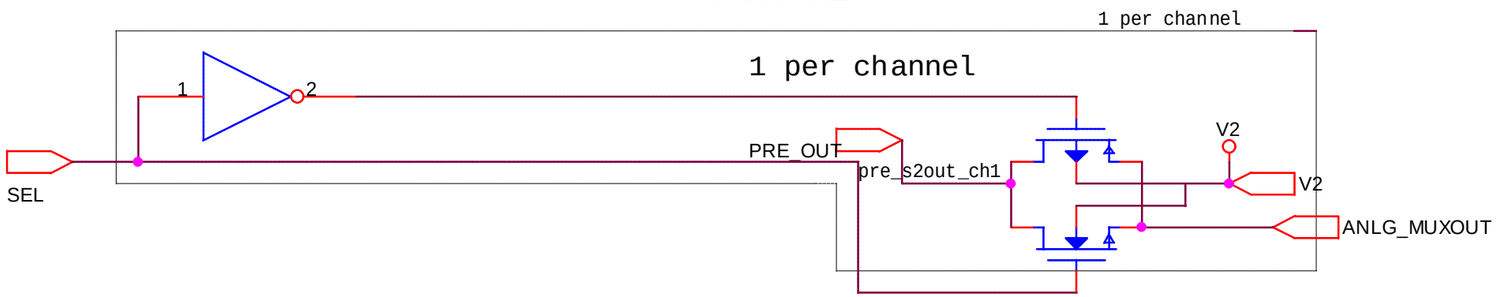

REF: PREOUT_MUX

TGL98.V2 PREAMP ANALOG MUX I&C DIVISION - OAK RIDGE NATIONAL LABORATORY			
Size A	Document Number 17	TGL98.V2 SCHEMATICS DESIGNERS: W.L.BRYAN, U.JAGADISH	Rev
Date: Monday, December 07, 1998		Sheet 1 of 1	

CELLNAME:
REF98_V2

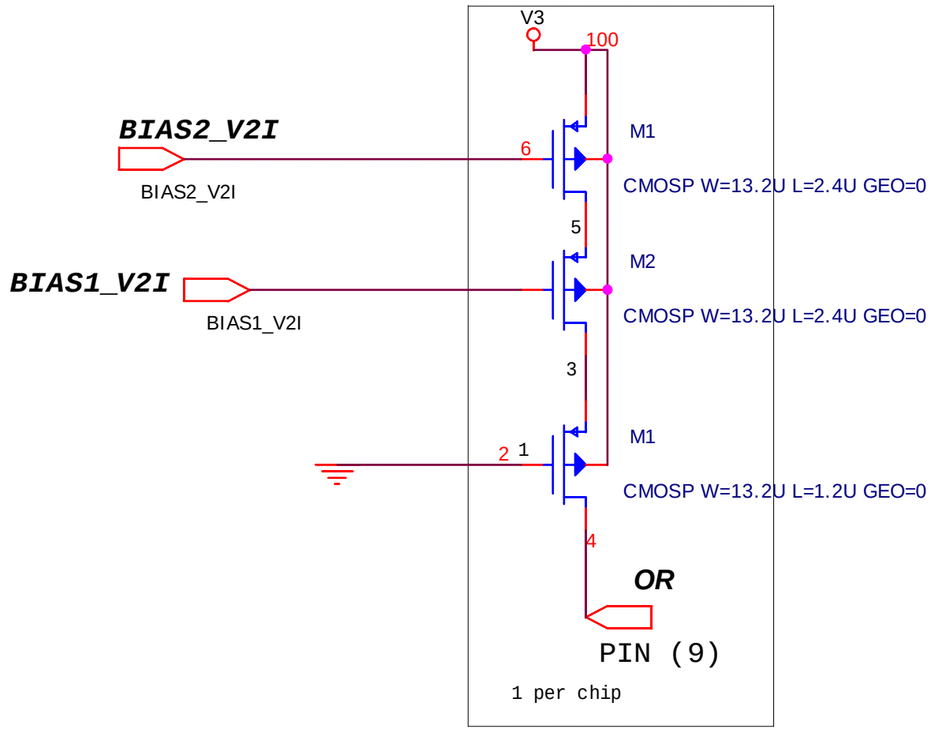

REF: REF_V2

TGL98.V2 REFERENCE CURRENT CELL I&C DIVISION - OAK RIDGE NATIONAL LABORATORY			
Size A	Document Number 7 TGL98.V2 SCHEMATICS DESIGNERS: M.L.SIMPSON, W.L.BRYAN, U.JAGADISH		Rev
Date: Monday, December 07, 1998		Sheet 1 of 1	

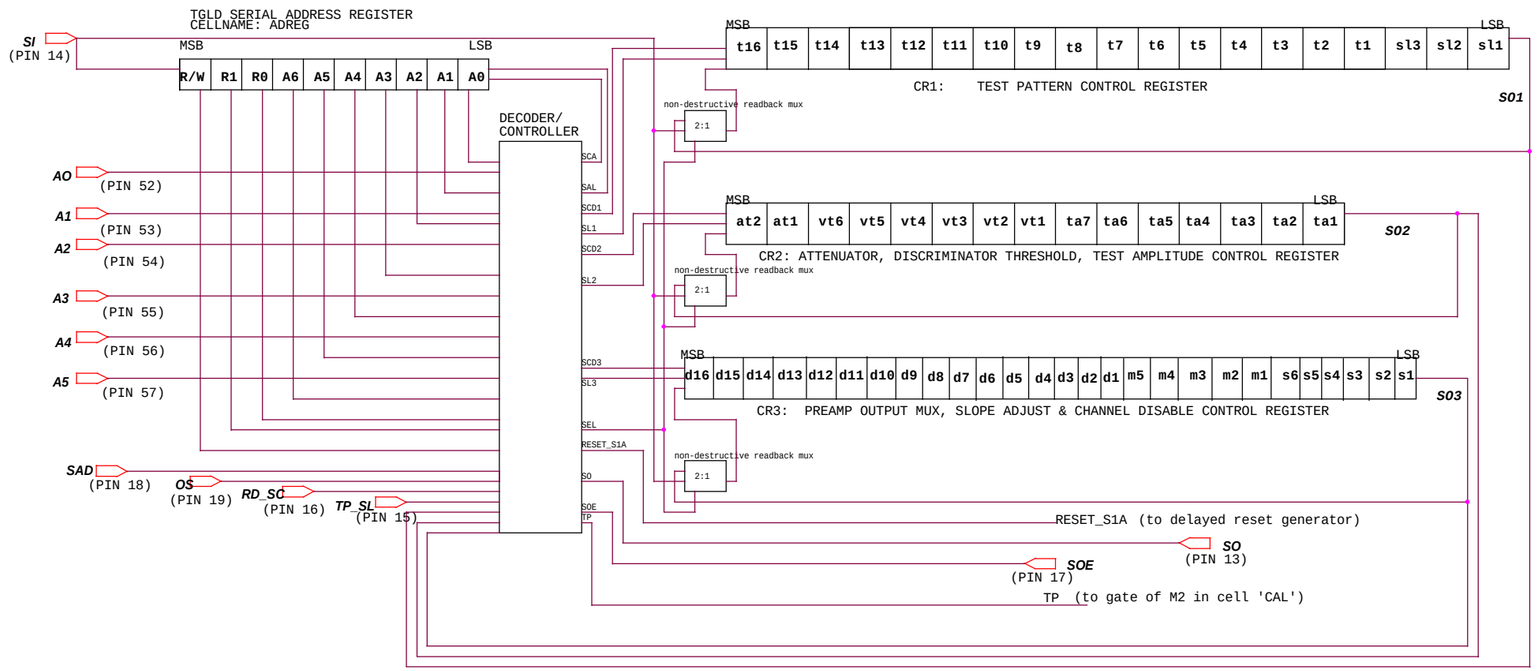

REF: REG_CONT

TGL98.V2 REGISTERS AND CONTROL CIRCUITRY I&C DIVISION - OAK RIDGE NATIONAL LABORATORY			
Size C	Document Number 19	TGL98.V2 SCHEMATICS DESIGNERS: J.ROCHELLE, L.G.CLONTS	Rev
Date: Monday, December 07, 1998		Sheet 1 of 1	

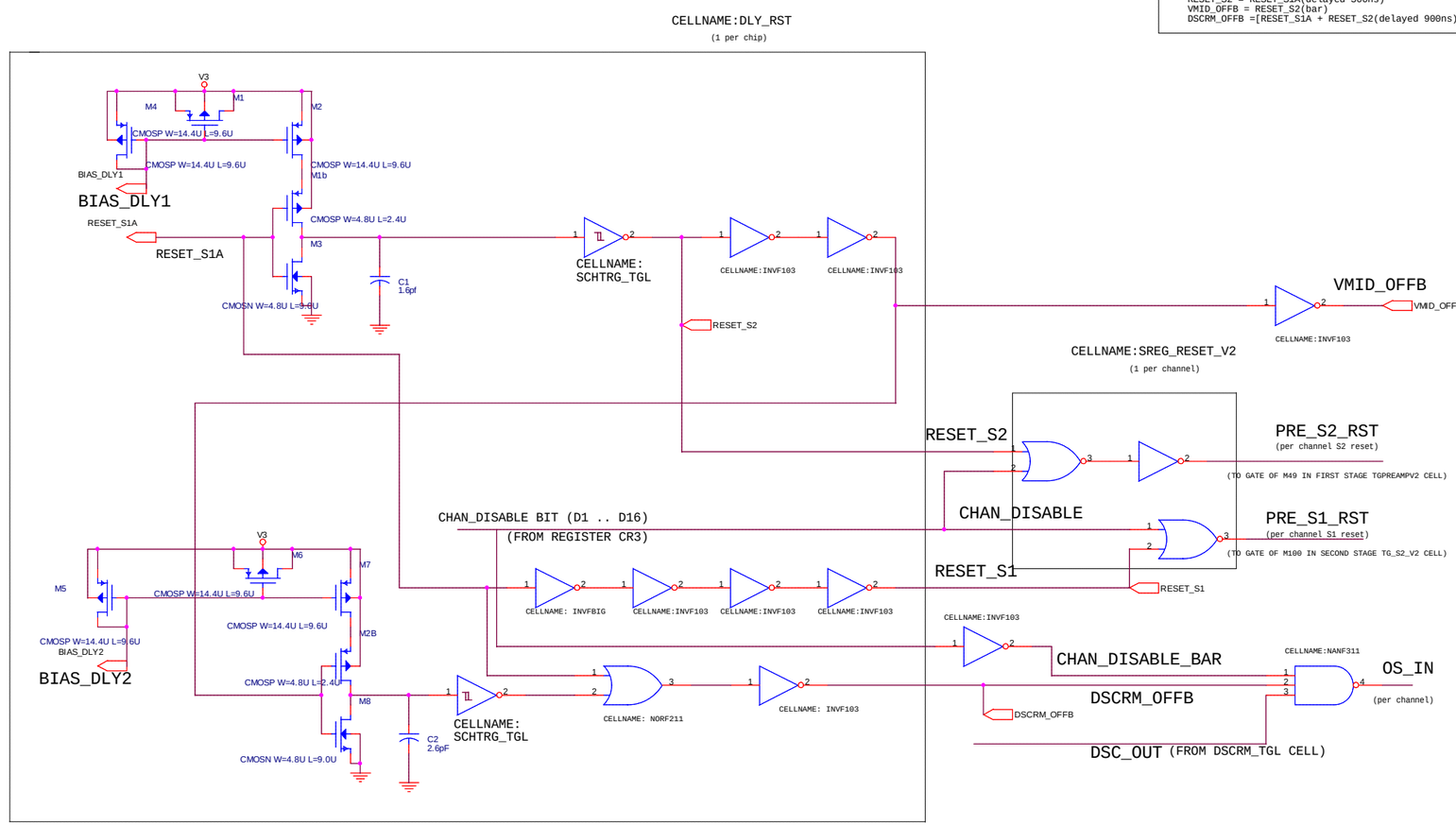

RESET SIGNALS TIMING DIAGRAM

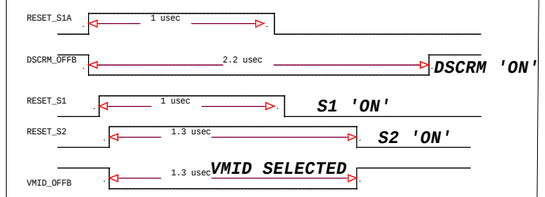


```
RESET_S1A = (RD_SC).OS(bar)+OS
RESET_S1 = RESET_S1A(delayed 4 gates)
RESET_S2 = RESET_S1A(delayed 300ns)
VMID_OFFB = RESET_S2(bar)
DSCRM_OFFB =[RESET_S1A + RESET_S2(delayed 900ns)](bar)
```

REF: RST_GEN

TGL98.V2 INTERNAL RESETS GENERATOR
I&C DIVISION - OAK RIDGE NATIONAL LABORATORY

Size	Document Number		Rev
C	4	TGL98.V2 SCHEMATICS DESIGNERS: W.L.BRYAN, U.JAGADISH	

Date: Monday, December 07, 1998 Sheet 1 of 1

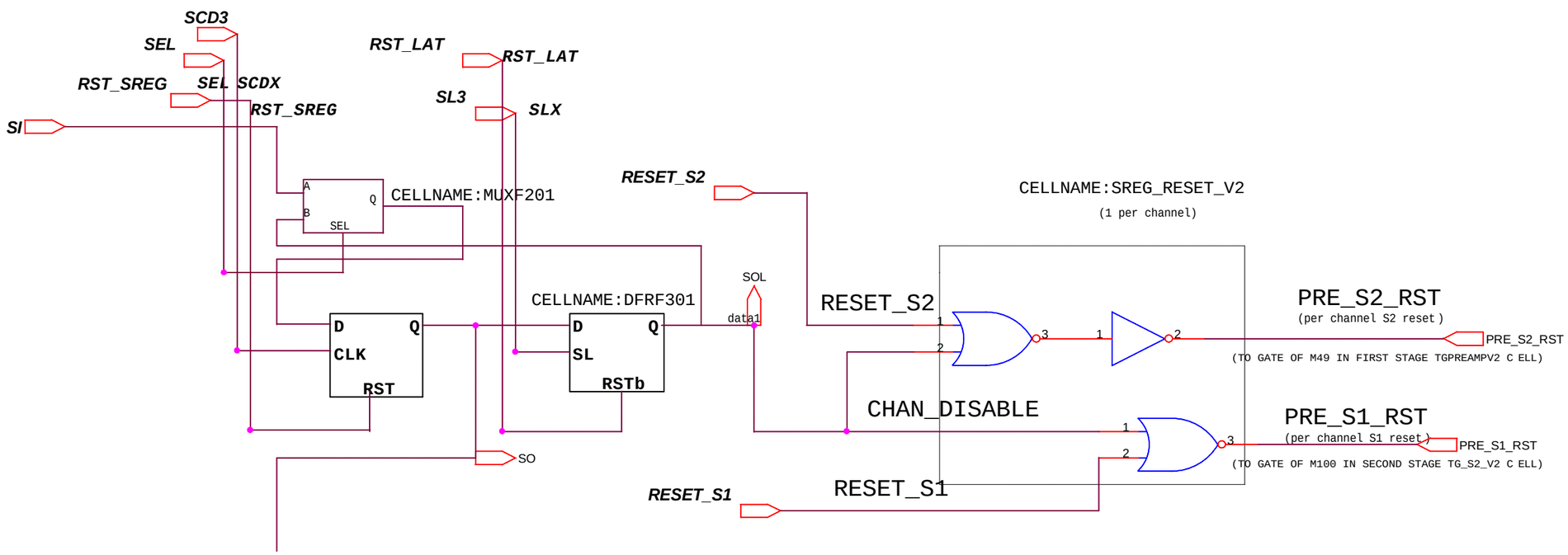

REF: RST_SREG2

TGL98.V2 PER CHANNEL ENABLE/DISABLE REGISTER (CR3)
I&C DIVISION - OAK RIDGE NATIONAL LABORATORY

Size	Document Number		Rev
B	16	TGL98.V2 SCHEMATICS DESIGNERS: W.L.BRYAN, U.JAGADISH	

Date: Monday, December 07, 1998 Sheet 1 of 1

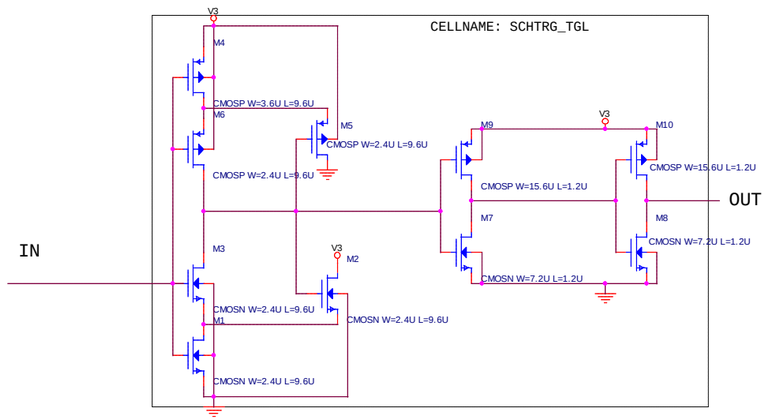

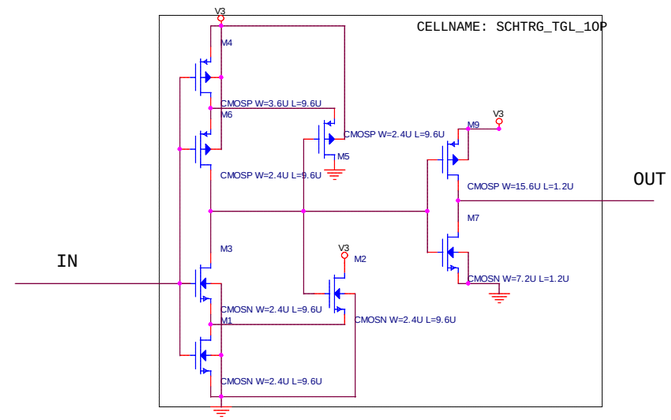

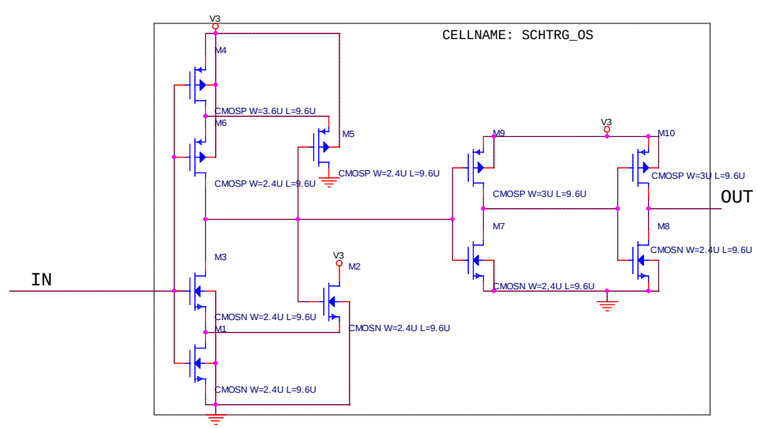

REF: SCHMIDT

TGL98.V2 SCHMIDT TRIGGER CIRCUIT USED
I&C DIVISION - OAK RIDGE NATIONAL LABORATORY

Size	Document Number		Rev
C	28	TGL98.V2 SCHEMATICS DESIGNERS: L.G.CLONTS, W.L.BRYAN, U.JAGADISH	

Date: Monday, December 07, 1998 Sheet 1 of 1

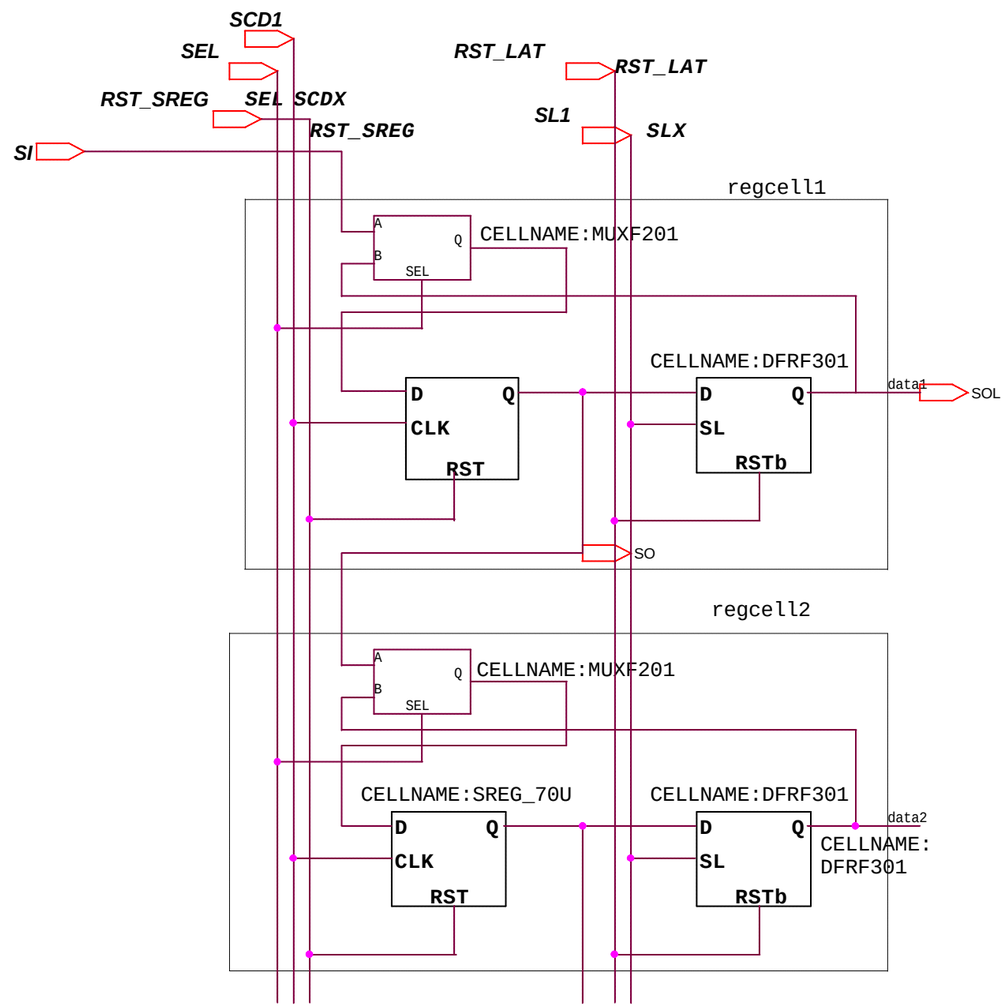

cell structure of CR1,CR2 & CR3 registers

CELLNAME:SREG_RDBK FOR CR1
CELLNAMES: SREG_70U;
DFRF301 FOR CR2 AND CR3

REF: SREG1

TGL98.V2 CR1 REGISTER CELL I&C DIVISION - OAK RIDGE NATIONAL LABORATORY			
Size B	Document Number 21	TGL98.V2 SCHEMATICS DESIGNERS: W.L.BRYAN, U.JAGADISH	Rev
Date: Monday, December 07, 1998		Sheet 1 of 1	

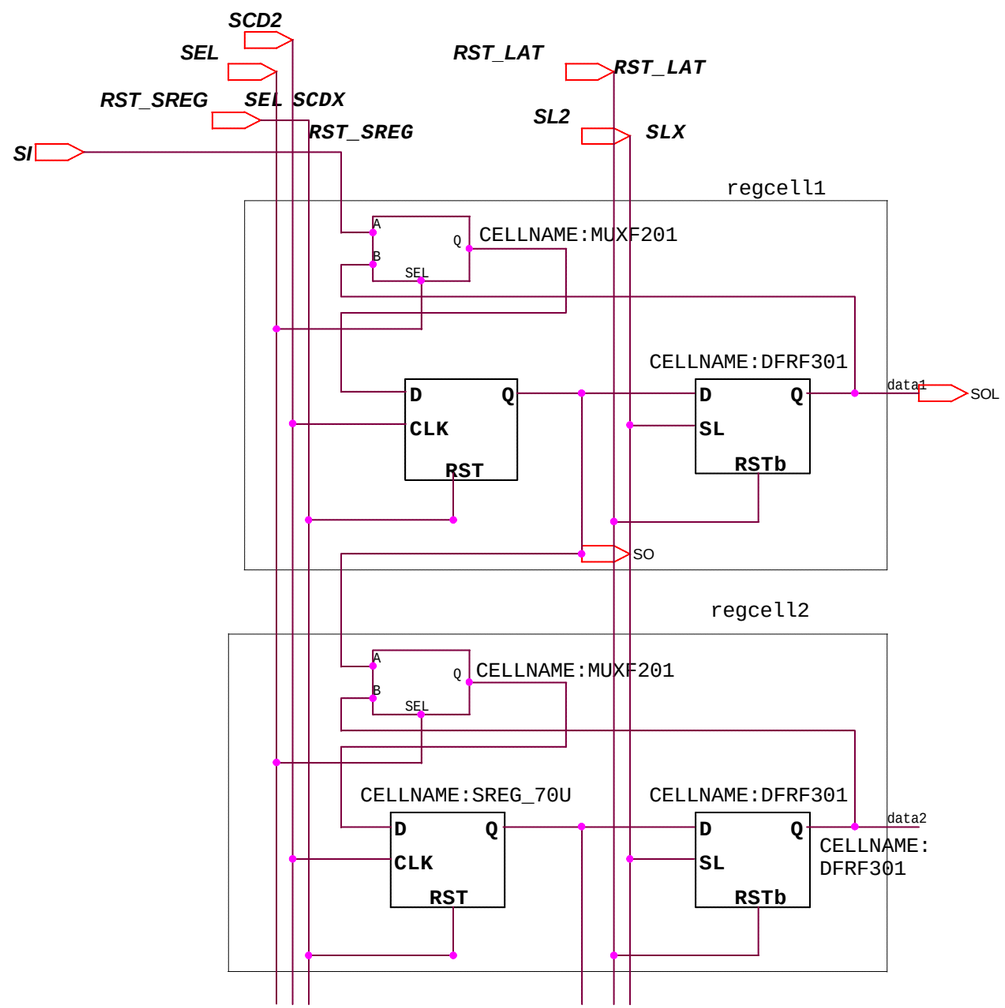

cell structure of CR1,CR2 & CR3 registers

CELLNAME:SREG_RDBK FOR CR1
CELLNAMES: SREG_70U;
DFRF301 FOR CR2 AND CR3

REF: SREG2

TGL98.V2 CR2 REGISTER CELL I&C DIVISION - OAK RIDGE NATIONAL LABORATORY		
Size B	Document Number 22	TGL98.V2 SCHEMATICS DESIGNERS: W.L.BRYAN, U.JAGADISH	Rev
Date: Monday, December 07, 1998	Sheet 1 of 1		

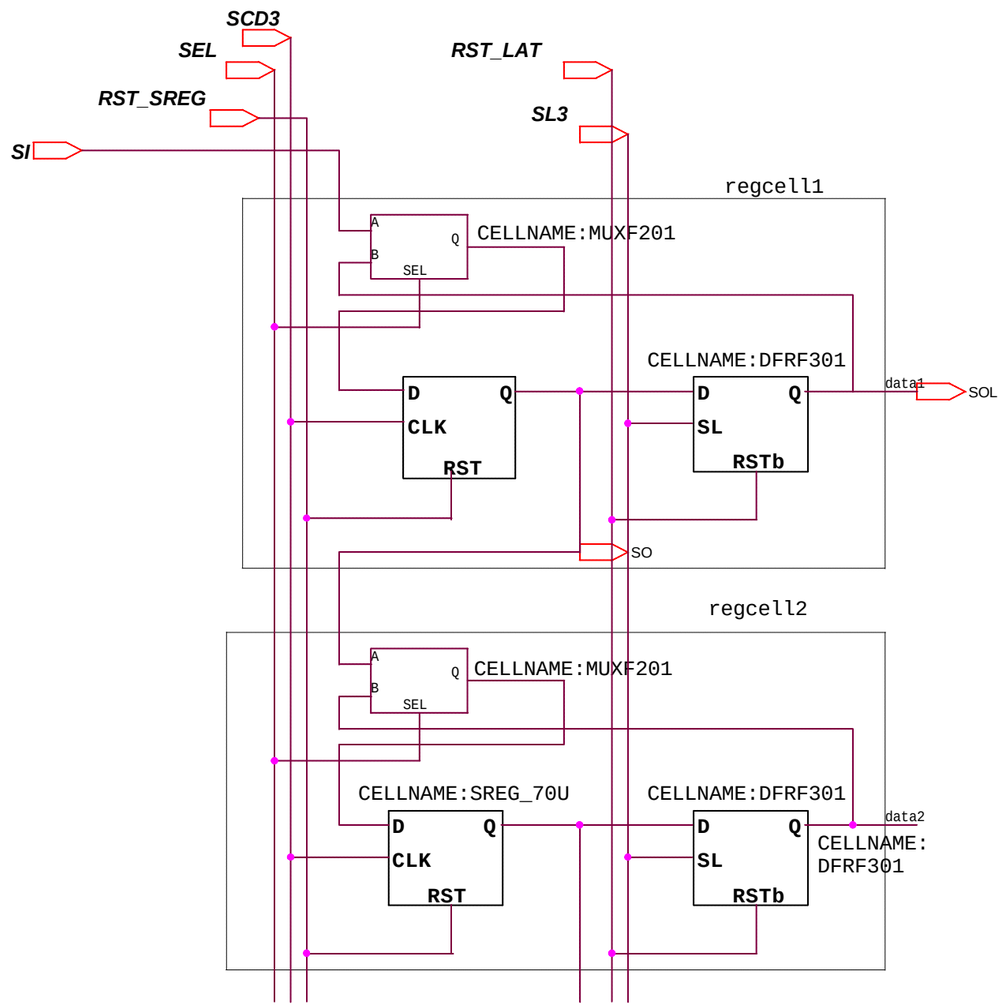

cell structure of CR1,CR2 & CR3 registers

CELLNAME:SREG_RDBK FOR CR1
CELLNAMES: SREG_70U;
DFRF301 FOR CR2 AND CR3

REF: SREG3

TGL98.V2 CR3 REGISTER CELL I&C DIVISION - OAK RIDGE NATIONAL LABORATORY			
Size B	Document Number 23	TGL98.V2 SCHEMATICS DESIGNERS: W.L.BRYAN, U.JAGADISH	Rev
Date: Monday, December 07, 1998		Sheet 1 of 1	

PREAMP FIRST STAGE
CELLNAME: TGPREAMP_10MV_V2

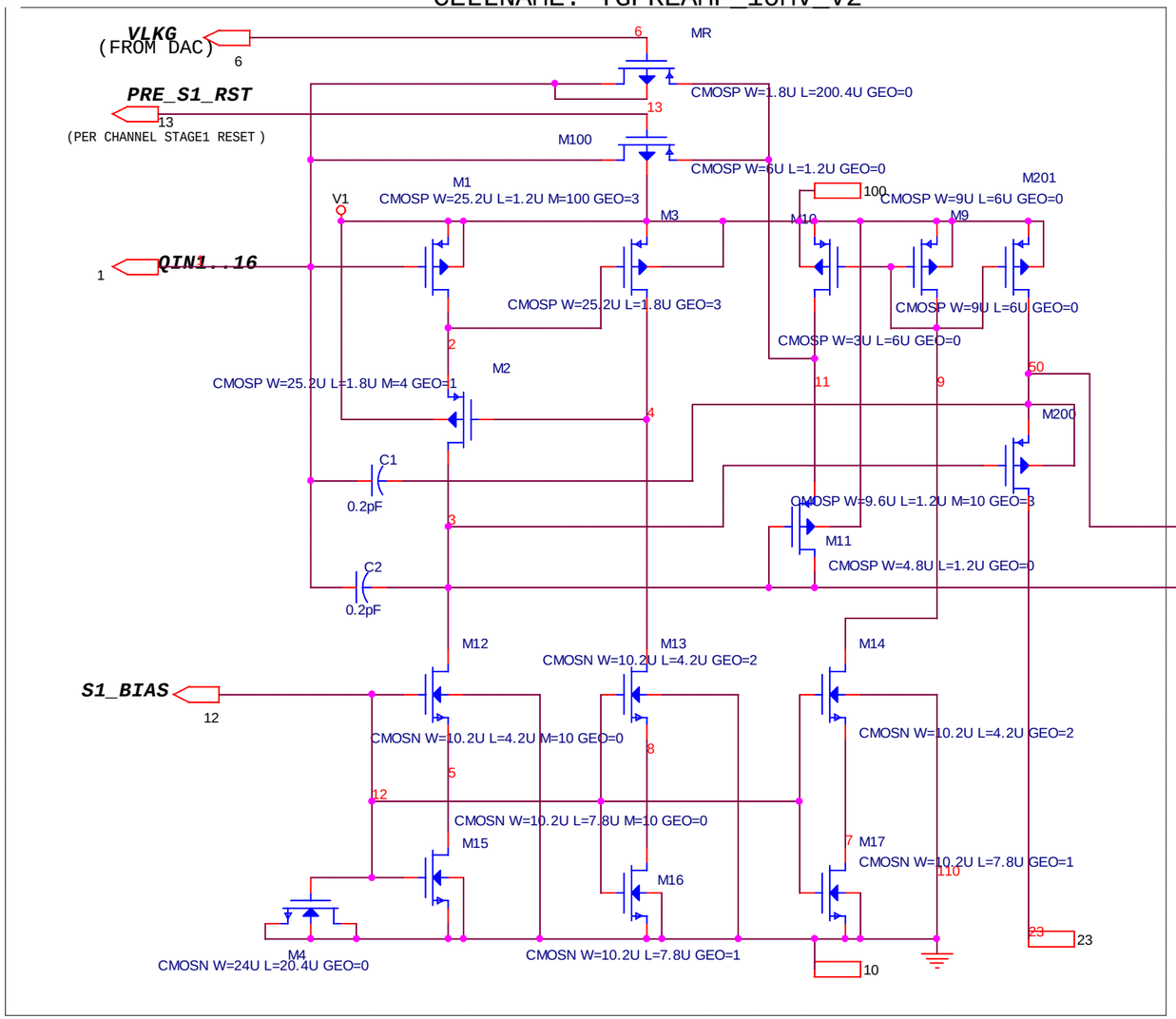

REF: STAGE1

TGL98.V2 PREAMP STAGE 1 I&C DIVISION - OAK RIDGE NATIONAL LABORATORY		
Size B	Document Number 14 TGL98.V2 SCHEMATICS DESIGNERS: C.L. BRITTON, W.L.BRYAN, U.JAGADISH	Rev
Date: Monday, December 07, 1998	Sheet 1 of 1	

PREAMP SECOND STAGE
CELLNAME: TG_S2_V2A

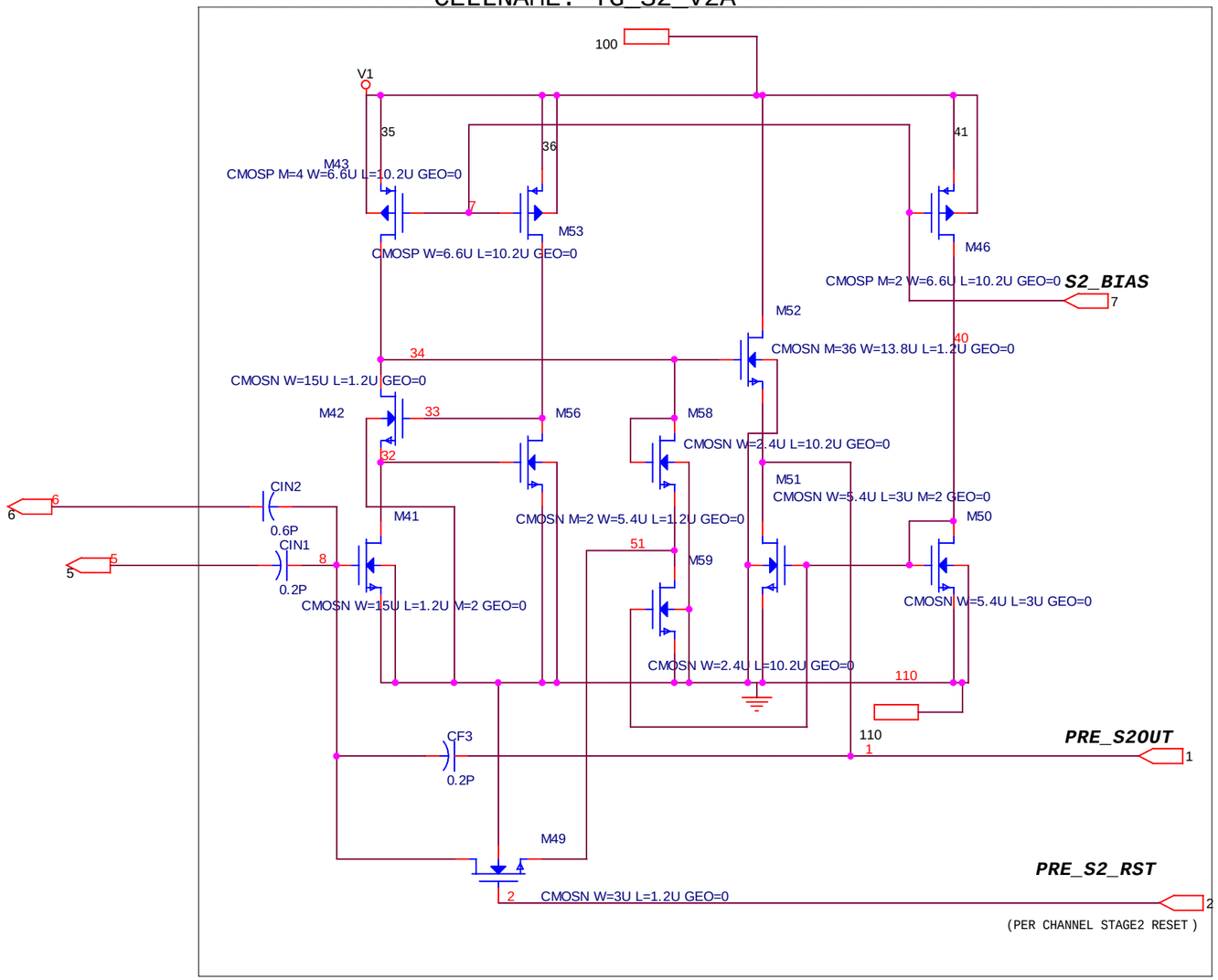

REF: STAGE2

TGL98.V2 PREAMP STAGE2 I&C DIVISION - OAK RIDGE NATIONAL LABORATORY			
Size B	Document Number 15	TGL98.V2 SCHEMATICS DESIGNERS: C.L.BRITTON, W.L.BRYAN, U.JAGADISH	Rev
Date: Monday, December 07, 1998		Sheet 1 of 1	