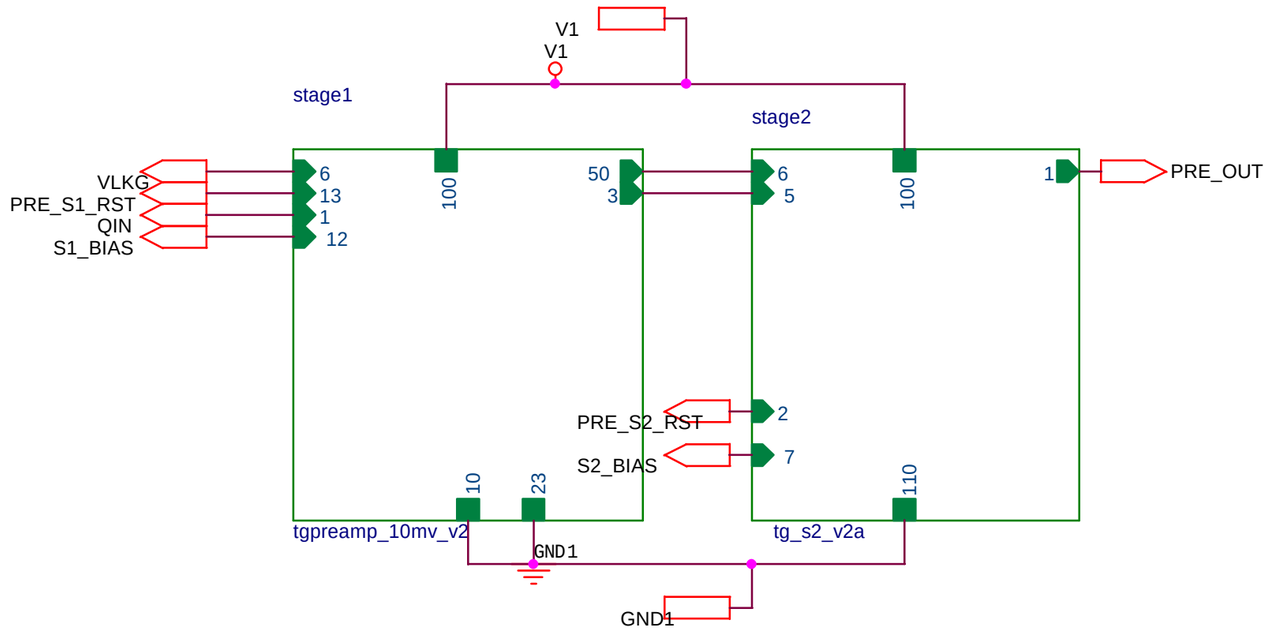

REF: PREAMP

TGL98.V2 PREAMP CIRCUIT I&C DIVISION - OAK RIDGE NATIONAL LABORATORY		
Size A	Document Number TGL98.V2 SCHEMATICS DESIGNERS: C.L.BRITTON, W.L.BRYAN, U.JAGADISH	Rev
Date: Monday, December 07, 1998	Sheet 1 of 1	

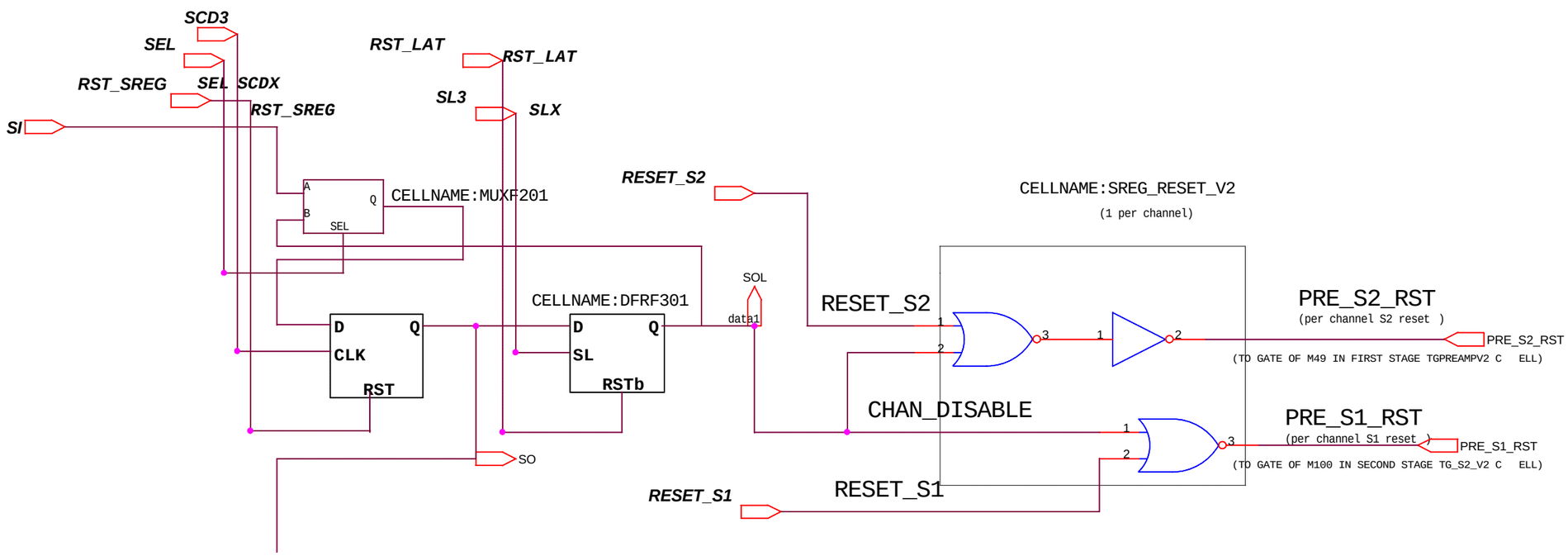

REF: RST_SREG2

TGL98.V2 CR2 REGISTERCHANNEL ENABLE/DISABLE REGISTER I&C DIVISION - OAK RIDGE NATIONAL LABORATORY		
Size B	Document Number TGL98.V2 SCHEMATICS DESIGNERS: W.L.BRYAN, U.JAGADISH	Rev
Date: Monday, December 07, 1998	Sheet 1 of 1	

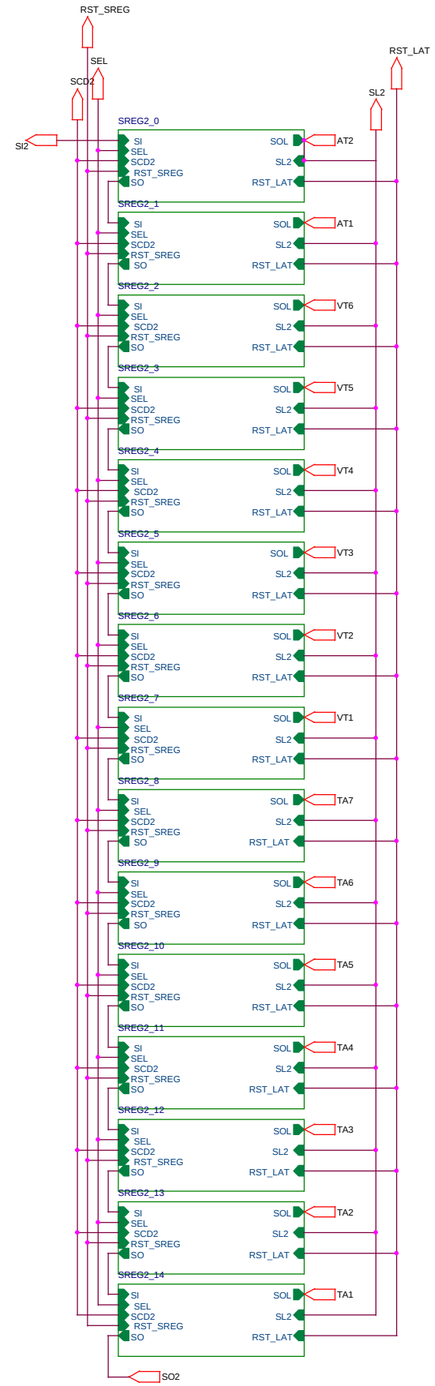

REF: CR2

TGL98.V2 CR2 REGISTER I&C DIVISION - OAK RIDGE NATIONAL LABORATORY		
Size C	Document Number TGL98.V2 SCHEMATICS DESIGNERS: W.L.BRYAN, U.JAGADISH	Rev
Date: Monday, December 07, 1998	Sheet 1 of 1	

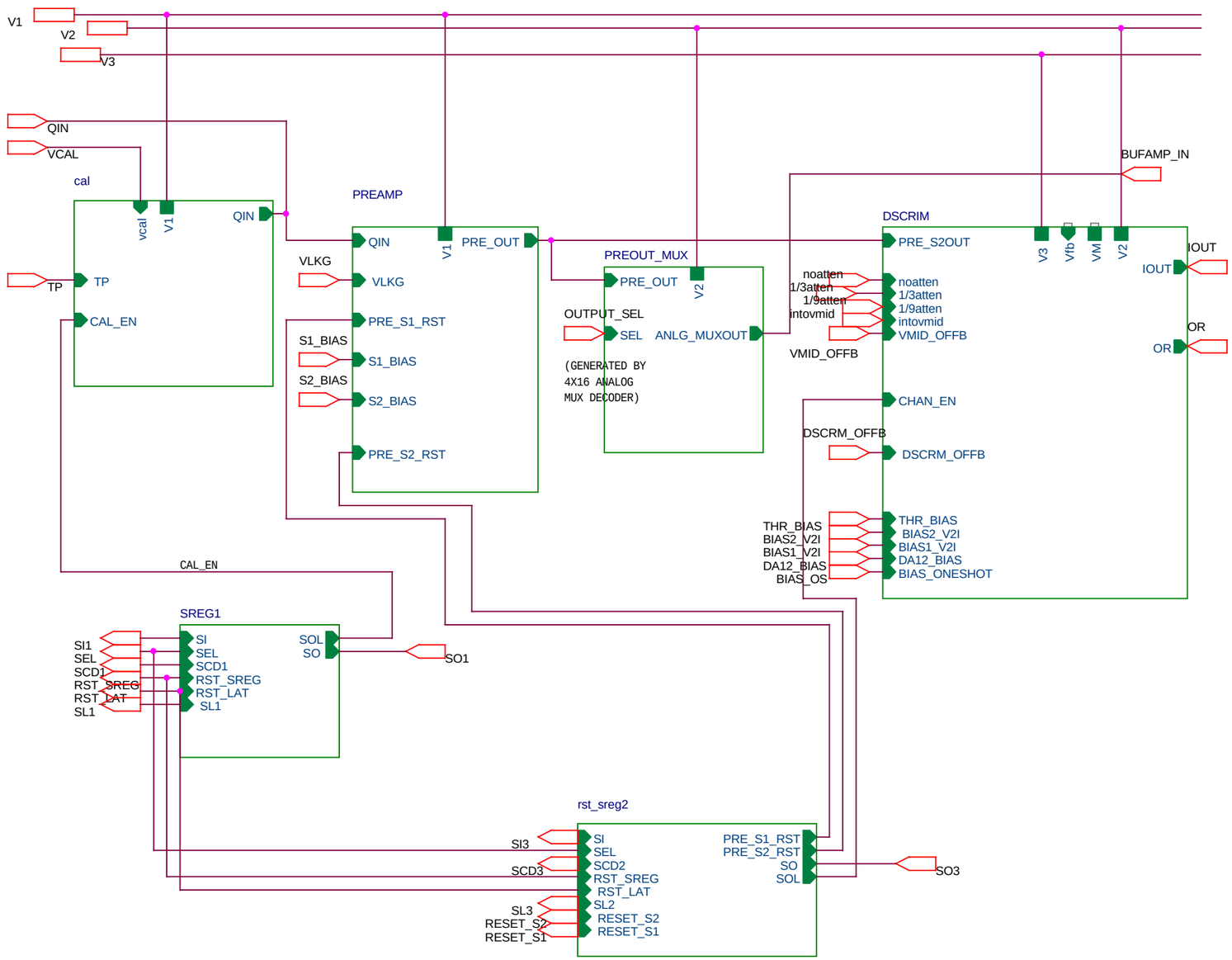

REF: CHANNEL

TGL98.V2 CHANNEL BLOCK DIAGRAM I&C DIVISION - OAK RIDGE NATIONAL LABORATORY		
Size B	Document Number TGL98.V2 SCHEMATICS DESIGNERS: W.L.BRYAN, U.JAGADISH	Rev
Date: Monday, December 07, 1998	Sheet 1 of 1	

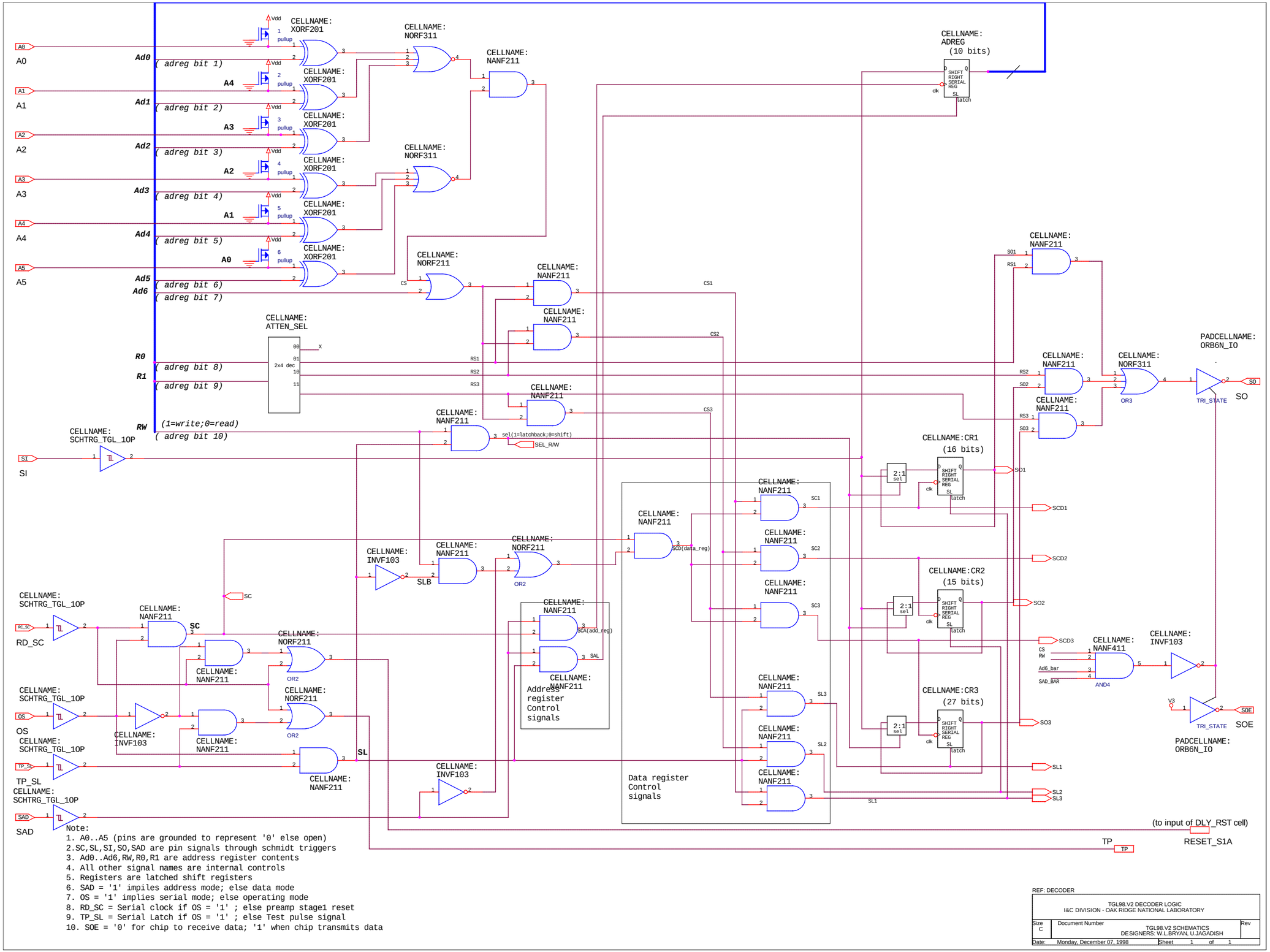

Note:
1. A0..A5 (pins are grounded to represent '0' else open)
2.SC,SL,SI,SO,SAD are pin signals through schmidt triggers
3. Ad0..Ad6,RW,R0,R1 are address register contents
4. All other signal names are internal controls
5. Registers are latched shift registers
6. SAD = '1' impiles address mode; else data mode
7. OS = '1' implies serial mode; else operating mode
8. RD_SC = Serial clock if OS = '1' ; else preamp stage1 reset
9. TP_SL = Serial Latch if OS = '1' ; else Test pulse signal
10. SOE = '0' for chip to receive data; '1' when chip transmits data

REF: DECODER

TGL98.V2 DECODER LOGIC
I&C DIVISION - OAK RIDGE NATIONAL LABORATORY

Size	Document Number	Rev
C	TGL98.V2 SCHEMATICS DESIGNERS: W.L.BRYAN, U.JAGADISH	

Date: Monday, December 07, 1998 Sheet 1 of 1

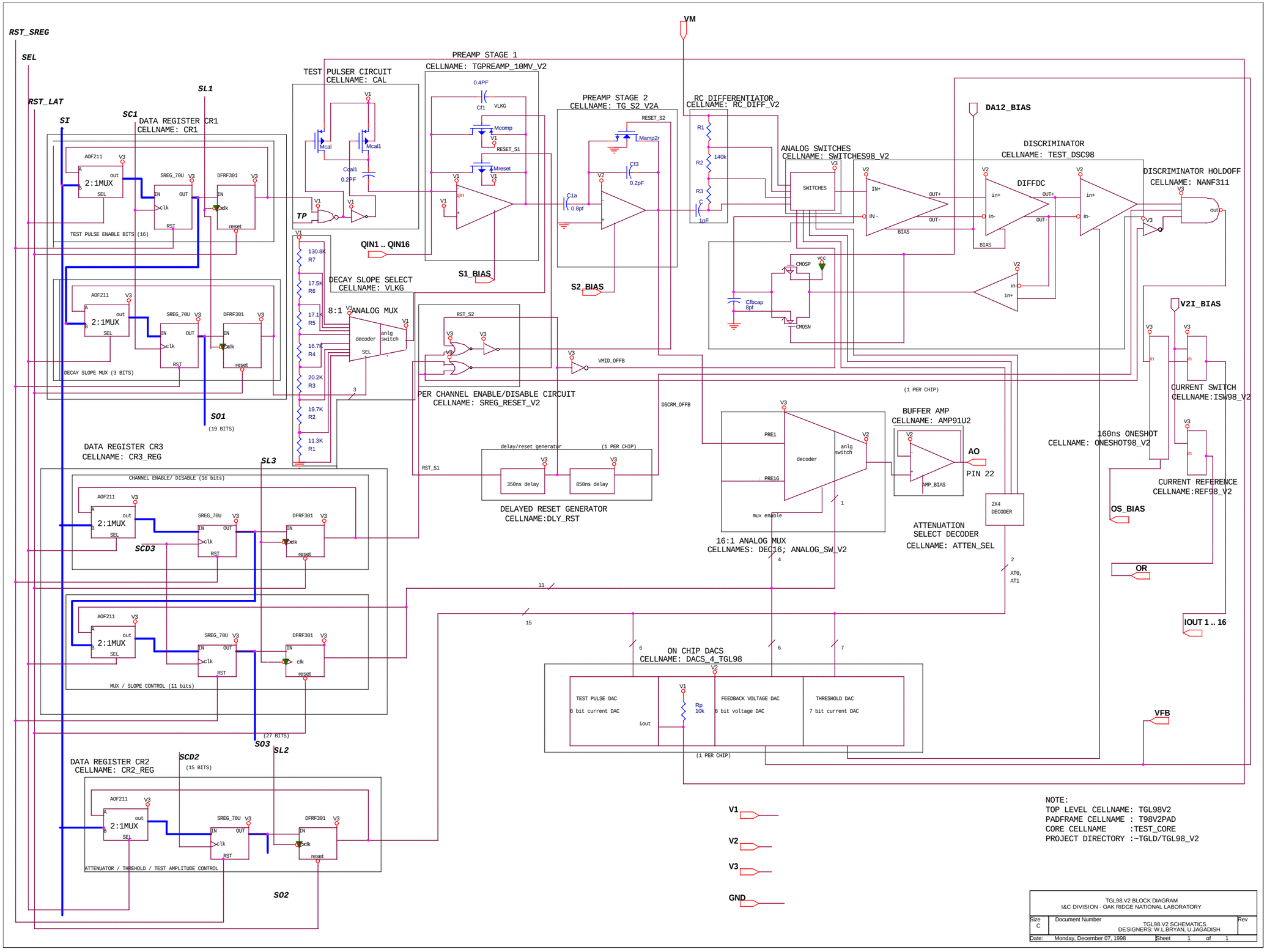
RST_SREG
SEL
RST_LAT
SI
SC1
SL1
DATA REGISTER CR1
CELLNAME: CR1
TEST PULSER CIRCUIT
CELLNAME: CAL
PREAMP STAGE 1
CELLNAME: TGPREAMP_10MV_V2
PREAMP STAGE 2
CELLNAME: TG_S2_V2A
RC DIFFERENTIATOR
CELLNAME: RC_DIFF_V2
VM
DA12_BIAS
ANALOG SWITCHES
CELLNAME: SWITCHES98_V2
DISCRIMINATOR
CELLNAME: TEST_DSC98
DIFFDC
DISCRIMINATOR HOLDOFF
CELLNAME: NANF311
TEST PULSE ENABLE BITS (16)
QIN1 .. QIN16
S1_BIAS
S2_BIAS
DECAY SLOPE SELECT
CELLNAME: VLKG
8:1 ANALOG MUX
DECAY SLOPE MUX (3 BITS)
V2I_BIAS
CURRENT SWITCH
CELLNAME:ISW98_V2
PER CHANNEL ENABLE/DISABLE CIRCUIT
CELLNAME: SREG_RESET_V2
(1 PER CHIP)
BUFFER AMP
CELLNAME: AMP91U2
AO
PIN 22
160ns ONESHOT
CELLNAME: ONESHOT98_V2
CURRENT REFERENCE
CELLNAME:REF98_V2
DATA REGISTER CR3
CELLNAME: CR3_REG
SL3
SO1
(19 BITS)
DELAYED RESET GENERATOR
CELLNAME:DLY_RST
16:1 ANALOG MUX
CELLNAMES: DEC16; ANALOG_SW_V2
ATTENUATION
SELECT DECODER
CELLNAME: ATTEN_SEL
2X4
DECODER
OS_BIAS
OR
IOUT 1 .. 16
ON CHIP DACS
CELLNAME: DACS_4_TGL98
TEST PULSE DAC
6 bit current DAC
FEEDBACK VOLTAGE DAC
6 bit voltage DAC
THRESHOLD DAC
7 bit current DAC
VFB
(27 BITS)
SO3
SL2
DATA REGISTER CR2
CELLNAME: CR2_REG
SCD2
(15 BITS)
ATTENUATOR / THREHOLD / TEST AMPLITUDE CONTROL
SO2
V1
V2
V3
GND
NOTE:
TOP LEVEL CELLNAME: TGL98V2
PADFRAME CELLNAME : T98V2PAD
CORE CELLNAME :TEST_CORE
PROJECT DIRECTORY :~TGLD/TGL98_V2
TGL98.V2 BLOCK DIAGRAM
I&C DIVISION - OAK RIDGE NATIONAL LABORATORY
Size C
Document Number
TGL98.V2 SCHEMATICS
DESIGNERS: W.L.BRYAN, U.JAGADISH
Rev
Date: Monday, December 07, 1998
Sheet 1 of 1

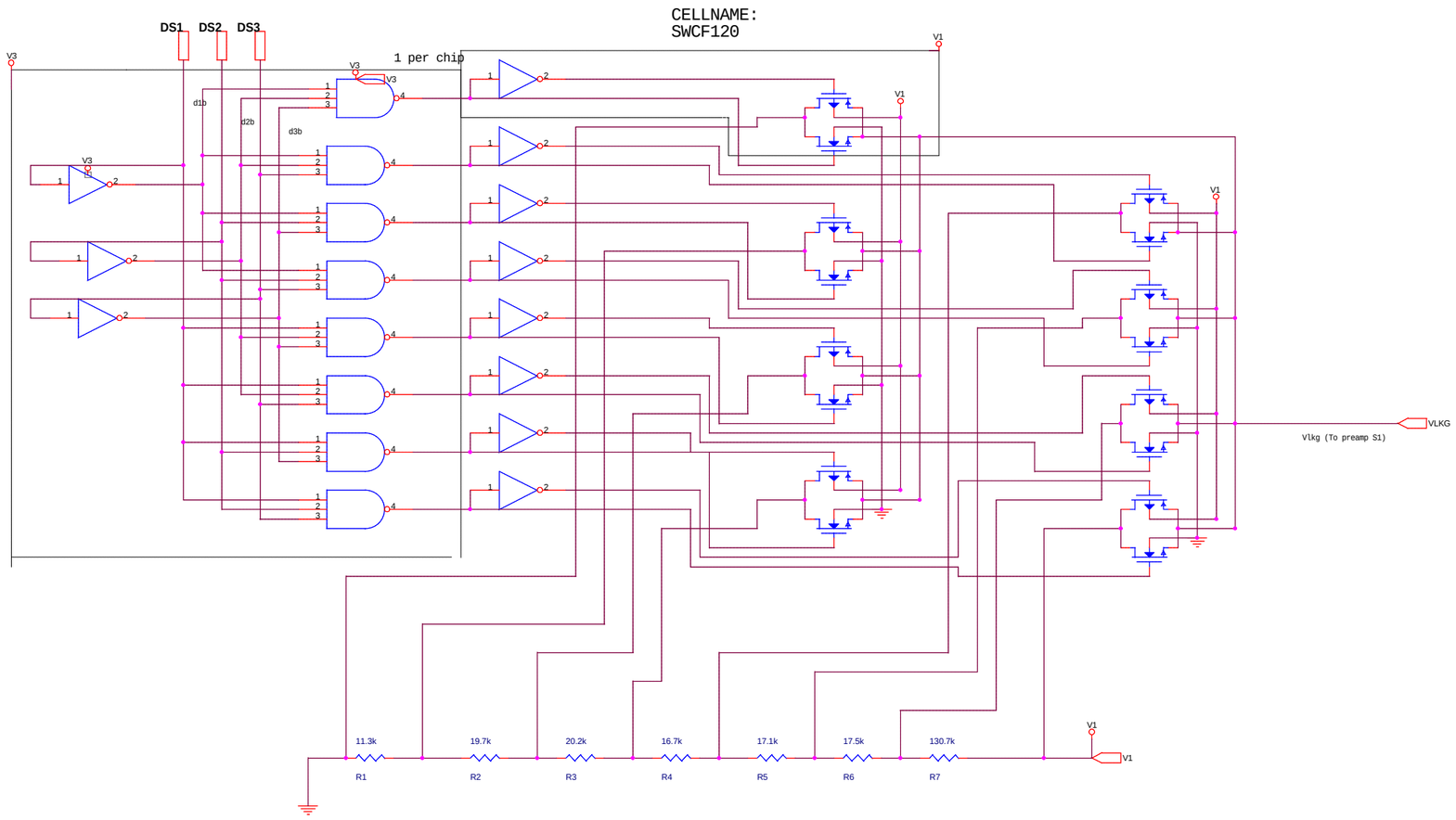

REF: LKG_GEN

TGL98.V2 VLKG SLOPE SELECT CIRCUIT I&C DIVISION - OAK RIDGE NATIONAL LABORATORY			
Size C	Document Number	TGL98.V2 SCHEMATICS DESIGNERS: W.L.BRYAN, U.JAGADISH	Rev
Date: Monday, December 07, 1998		Sheet 1 of 1	

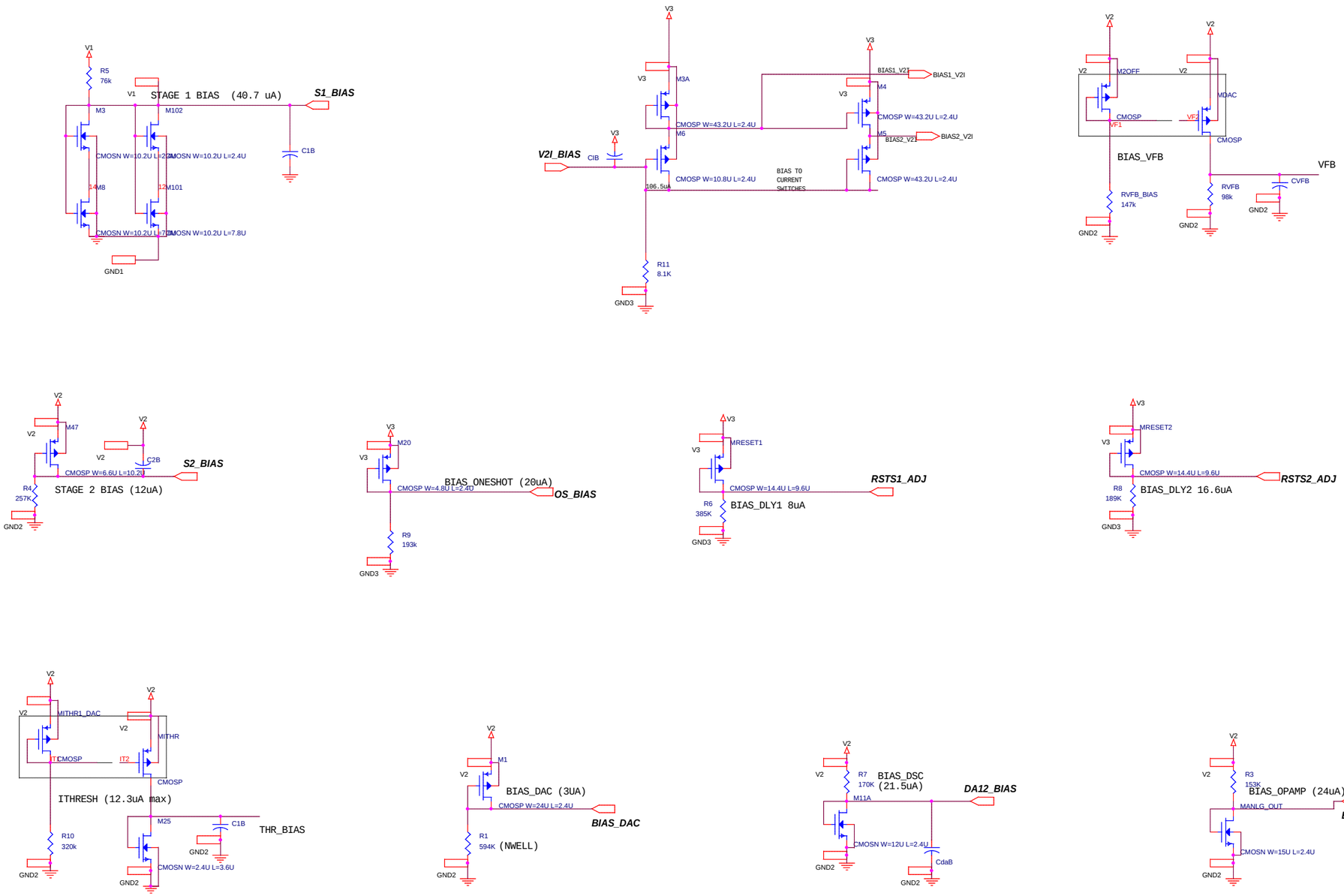

REF: BIAS_CKT

TGL98.V2 ON-CHIP BIAS GENERATOR I&C DIVISION - OAK RIDGE NATIONAL LABORATORY		
Size C	Document Number TGL98.V2 SCHEMATICS DESIGNERS: W.L.BRYAN, U.JAGADISH	Rev
Date: Monday, December 07, 1998	Sheet 1 of 1	

CELLNAME:
SWCF020

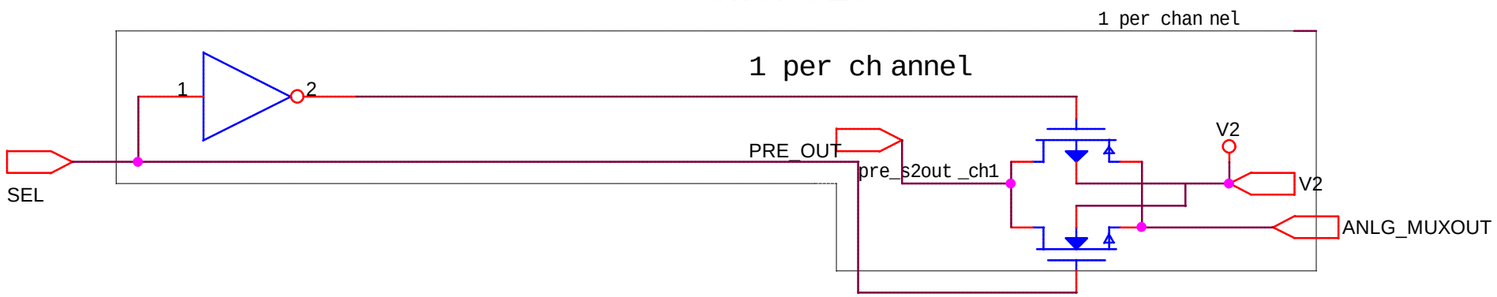

REF: PREOUT_MUX

TGL98.V2 PREAMP ANALOG MUX I&C DIVISION - OAK RIDGE NATIONAL LABORATORY			
Size A	Document Number	TGL98.V2 SCHEMATICS DESIGNERS: W.L.BRYAN, U.JAGADISH	Rev
Date: Monday, December 07, 1998		Sheet 1 of 1	

PREAMP FIRST STAGE
CELLNAME: TGPREAMP_10MV_V2

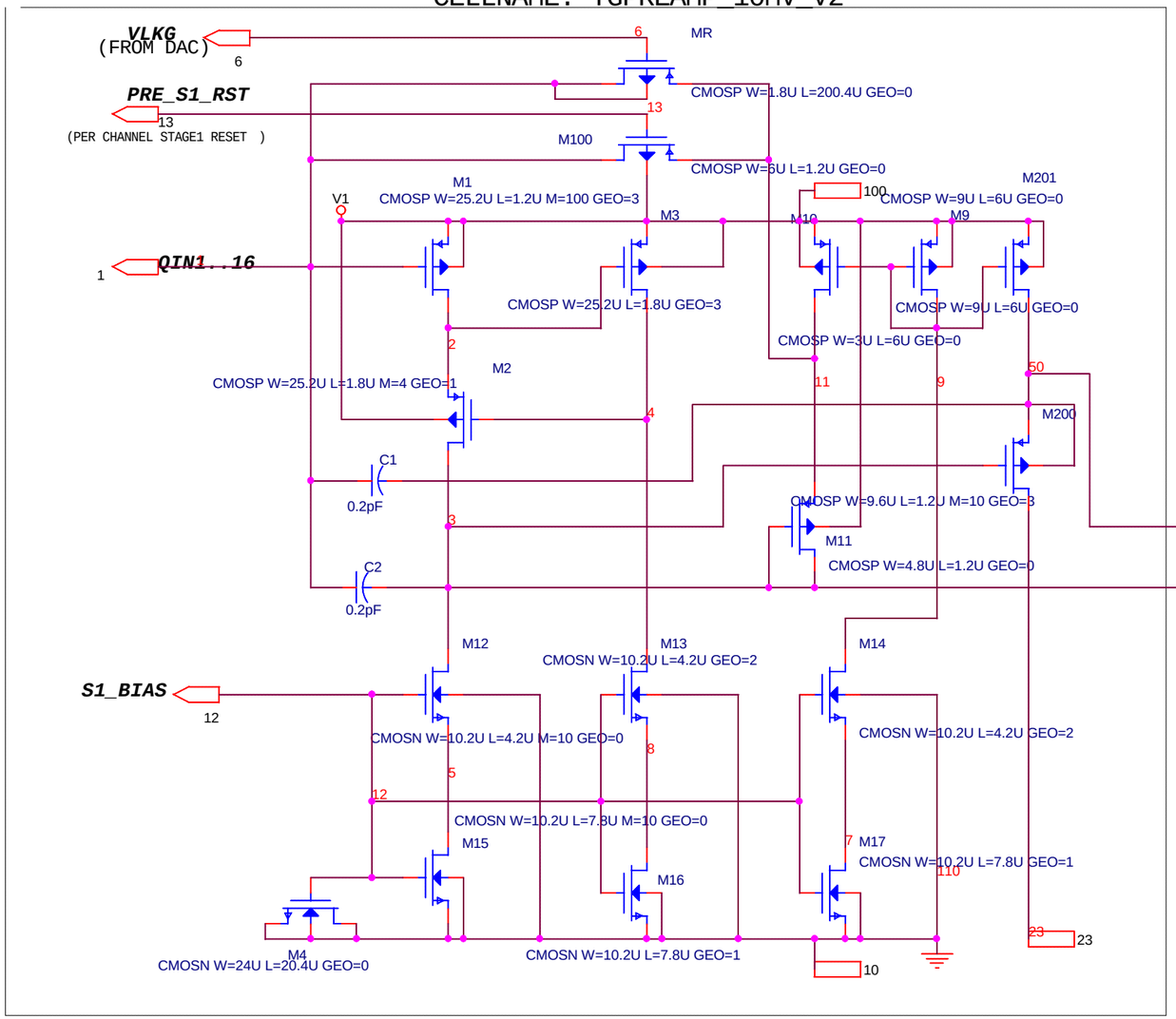

REF: STAGE1

TGL98.V2 PREAMP STAGE 1 I&C DIVISION - OAK RIDGE NATIONAL LABORATORY			
Size B	Document Number	TGL98.V2 SCHEMATICS DESIGNERS: W.L.BRYAN, U.JAGADISH	Rev
Date:	Monday, December 07, 1998	Sheet 1 of 1	

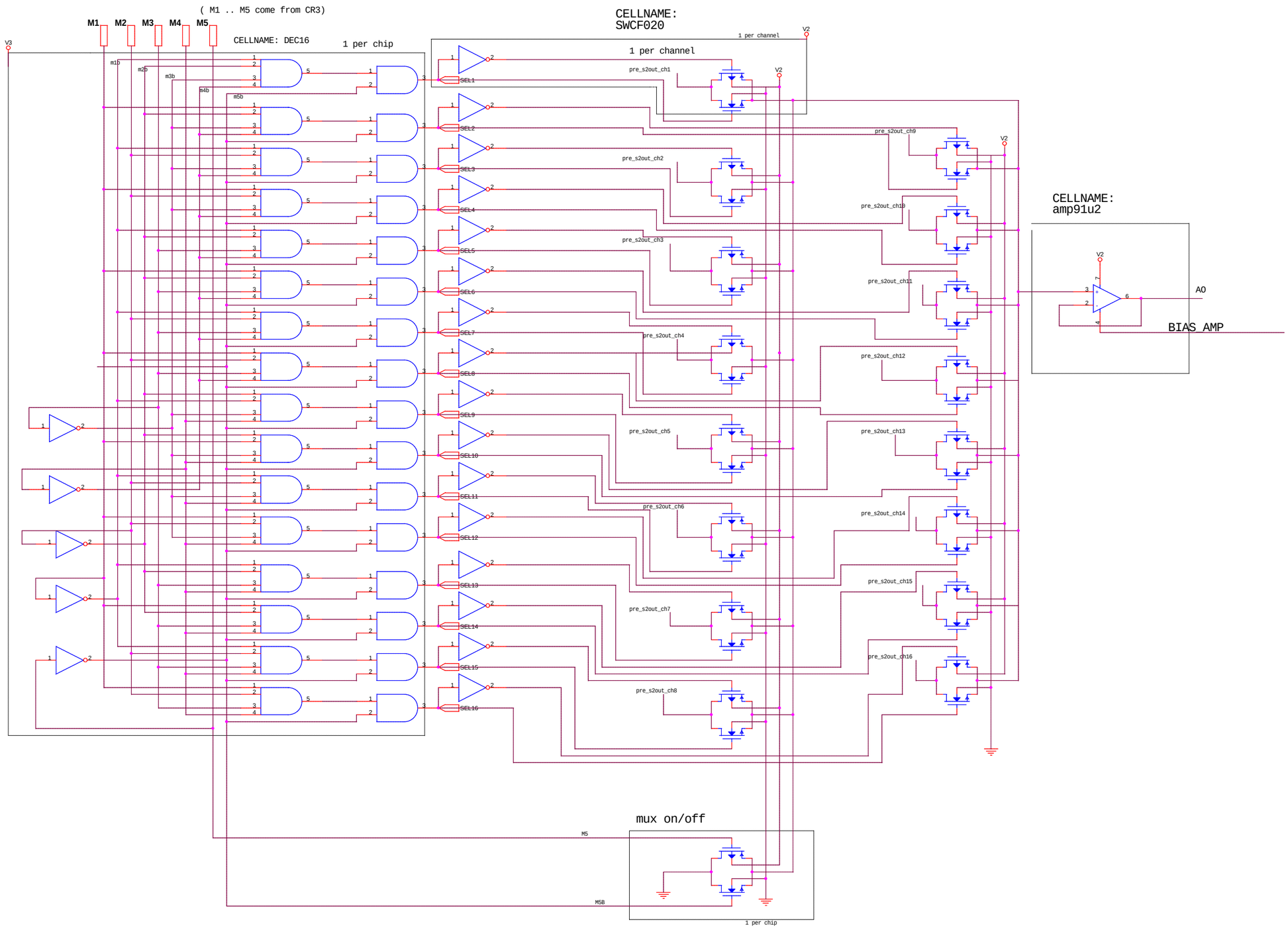

REF: OUTPUTSEL_DECODER

TGL98.V2 PREAMP OUTPUT SELECT MUX I&C DIVISION - OAK RIDGE NATIONAL LABORATORY		
Size C	Document Number TGL98.V2 SCHEMATICS DESIGNERS: W.L.BRYAN, U.JAGADISH	Rev
Date: Monday, December 07, 1998	Sheet 1 of 1	

PREAMP SECOND STAGE
CELLNAME: TG_S2_V2A

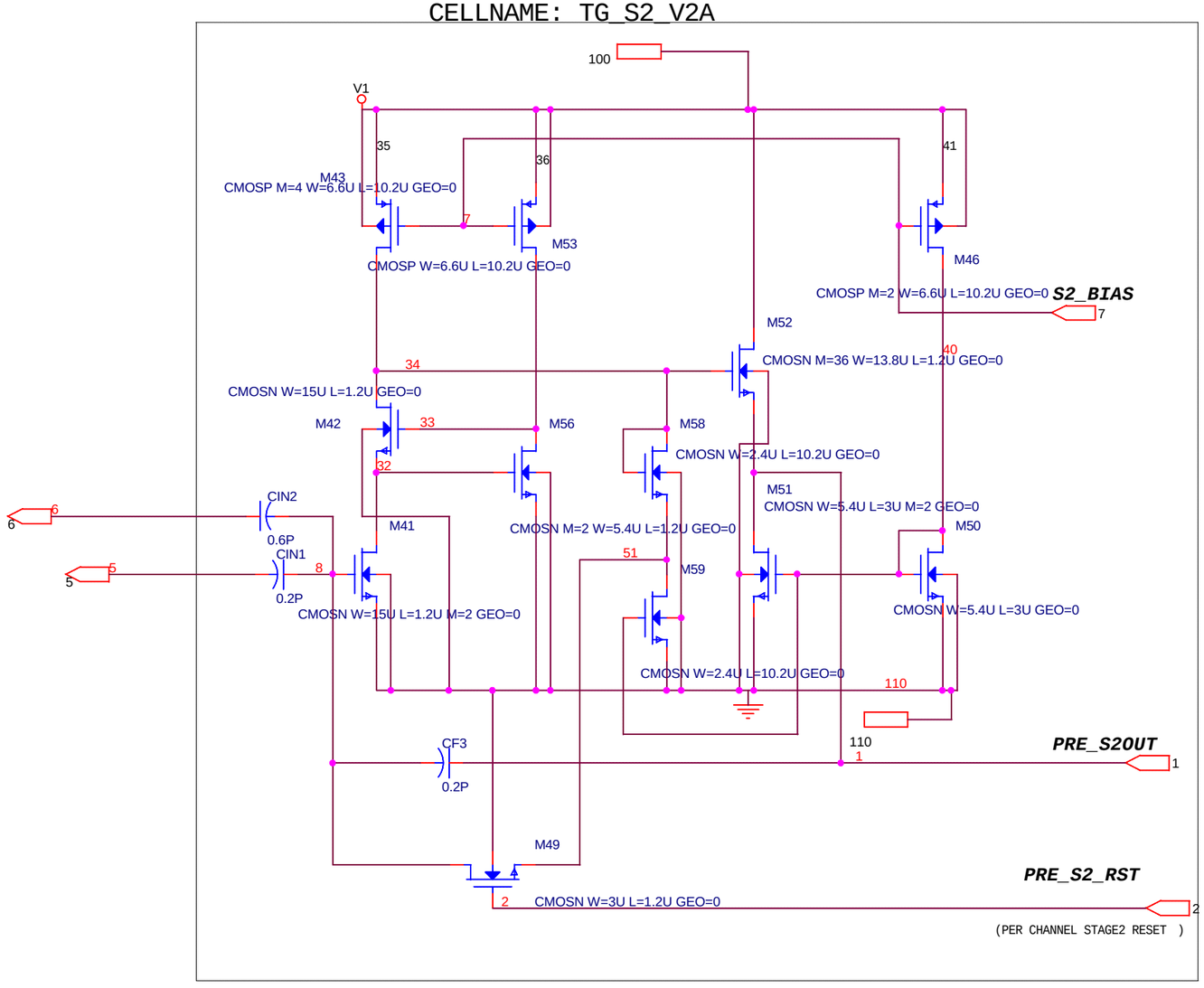

REF: STAGE2

TGL98.V2 PREAMP STAGE2 I&C DIVISION - OAK RIDGE NATIONAL LABORATORY		
Size B	Document Number TGL98.V2 SCHEMATICS DESIGNERS: W.L.BRYAN, U.JAGADISH	Rev
Date: Monday, December 07, 1998	Sheet 1 of 1	

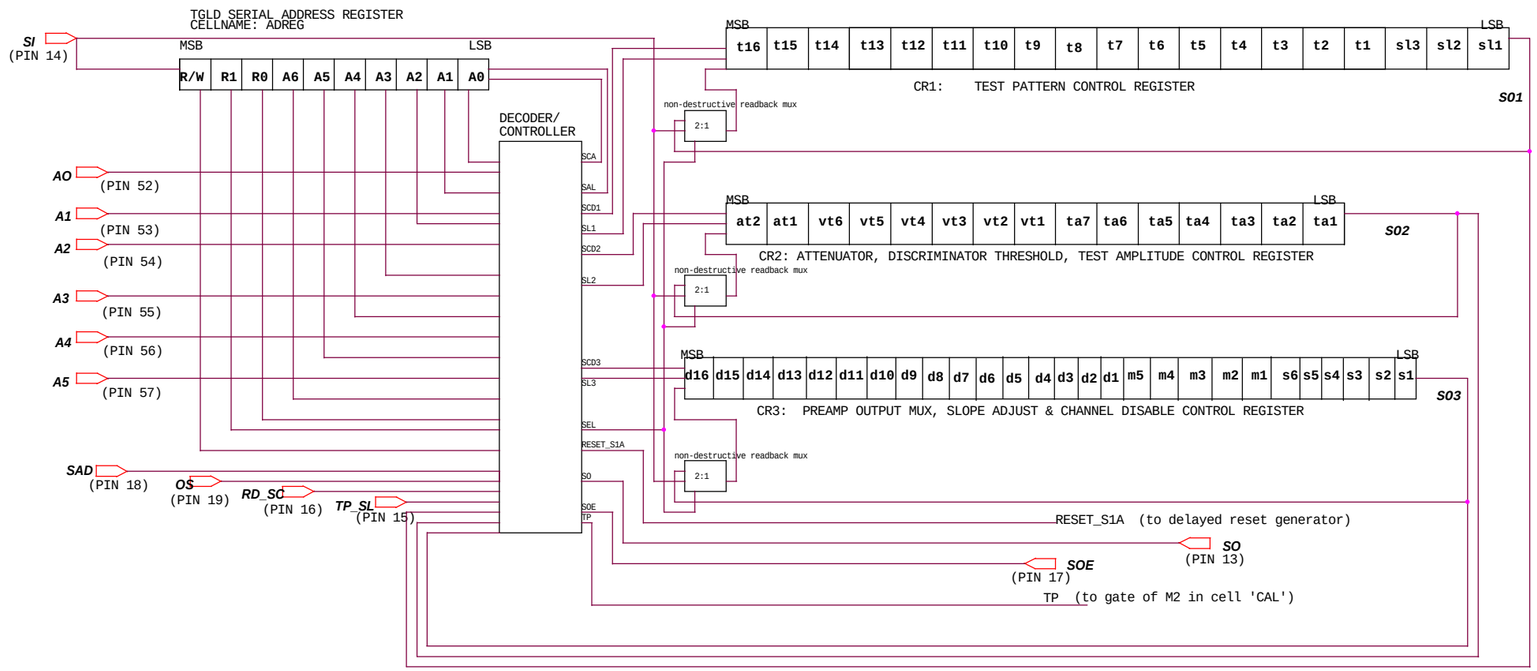

TGL98.V3 REGISTER SET AND CONTROL BLOCK DIAGRAM I&C DIVISION - OAK RIDGE NATIONAL LABORATORY			
Size C	Document Number 3	TGLD SCHEMATICS DESIGNERS: W.L.BRYAN , U.JAGADISH	Rev
Date: Monday, December 07, 1998		Sheet 1 of 1	

CELL NAME: CAL

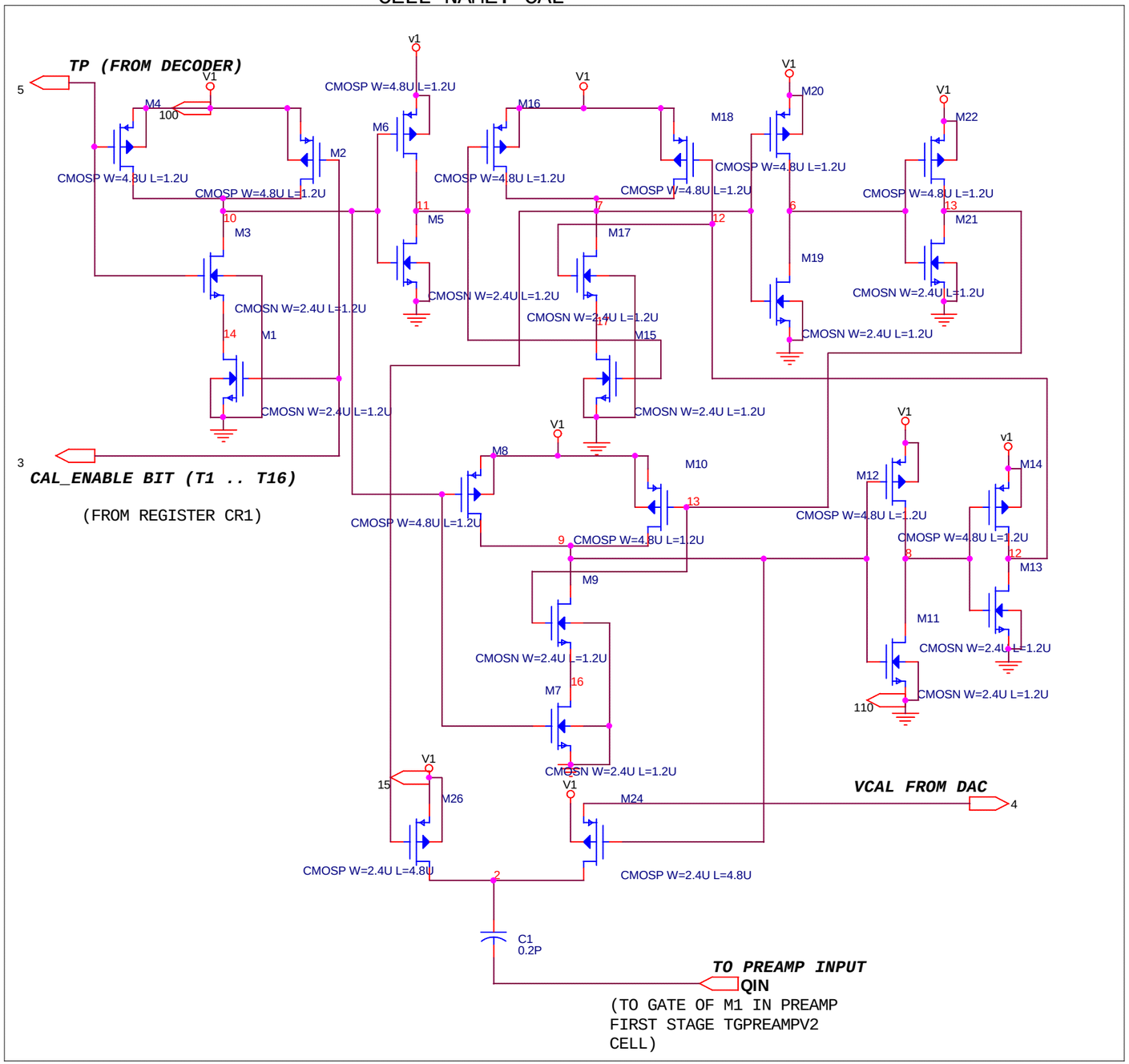

REF: CAL

TGL98.V2 TEST PULSE CALIBRATOR I&C DIVISION - OAK RIDGE NATIONAL LABORATORY		
Size B	Document Number TGL98.V2 SCHEMATICS DESIGNERS: W.L.BRYAN, U.JAGADISH	Rev
Date: Monday, December 07, 1998	Sheet 1 of 1	

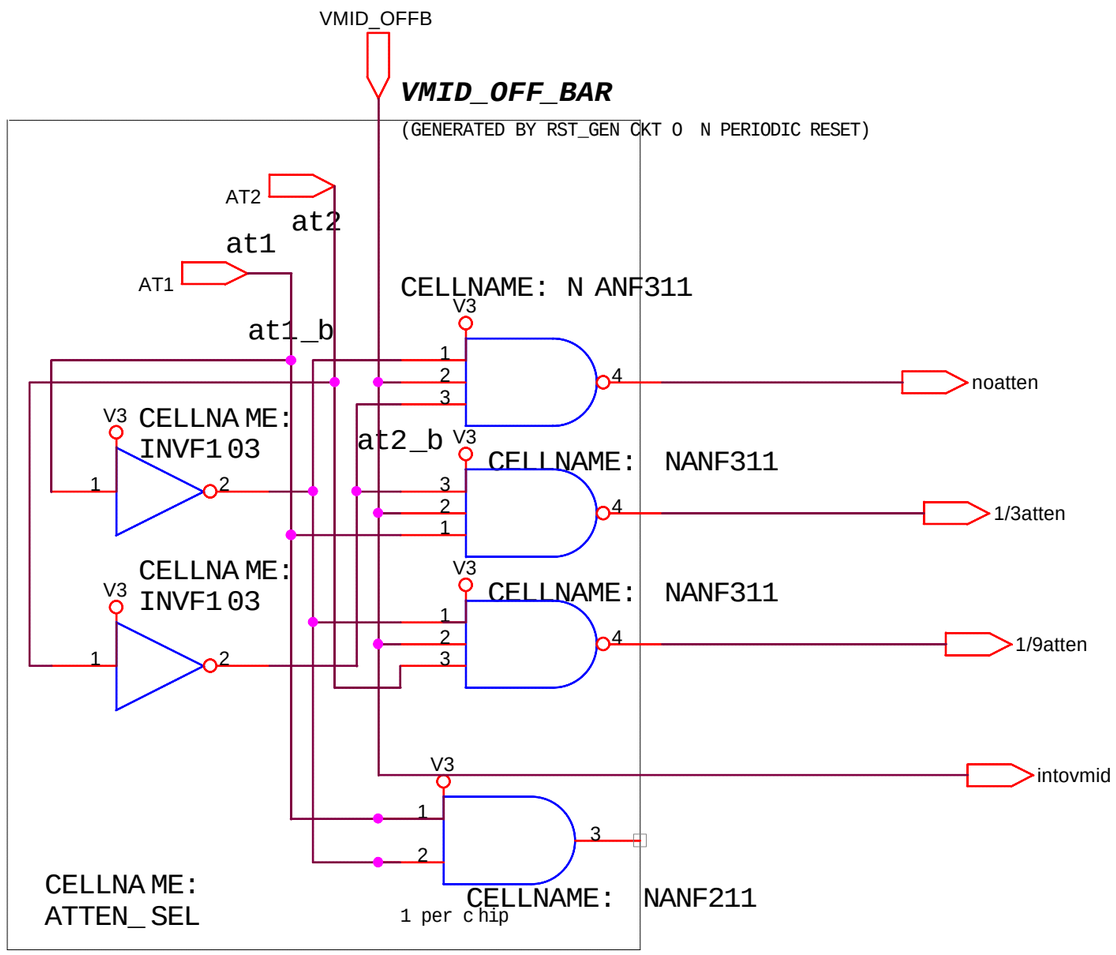

REF: ATTEN_SEL

TGL98.V2: C-R ATTENUATION SELECT LOGIC I&C DIVISION - OAK RIDGE NATIONAL LABORATORY			
Size A	Document Number TGL98.V2 SCHEMATICS DESIGNERS: W.L.BRYAN, U.JAGADISH		Rev
Date: Monday, December 07, 1998		Sheet 1 of 1	

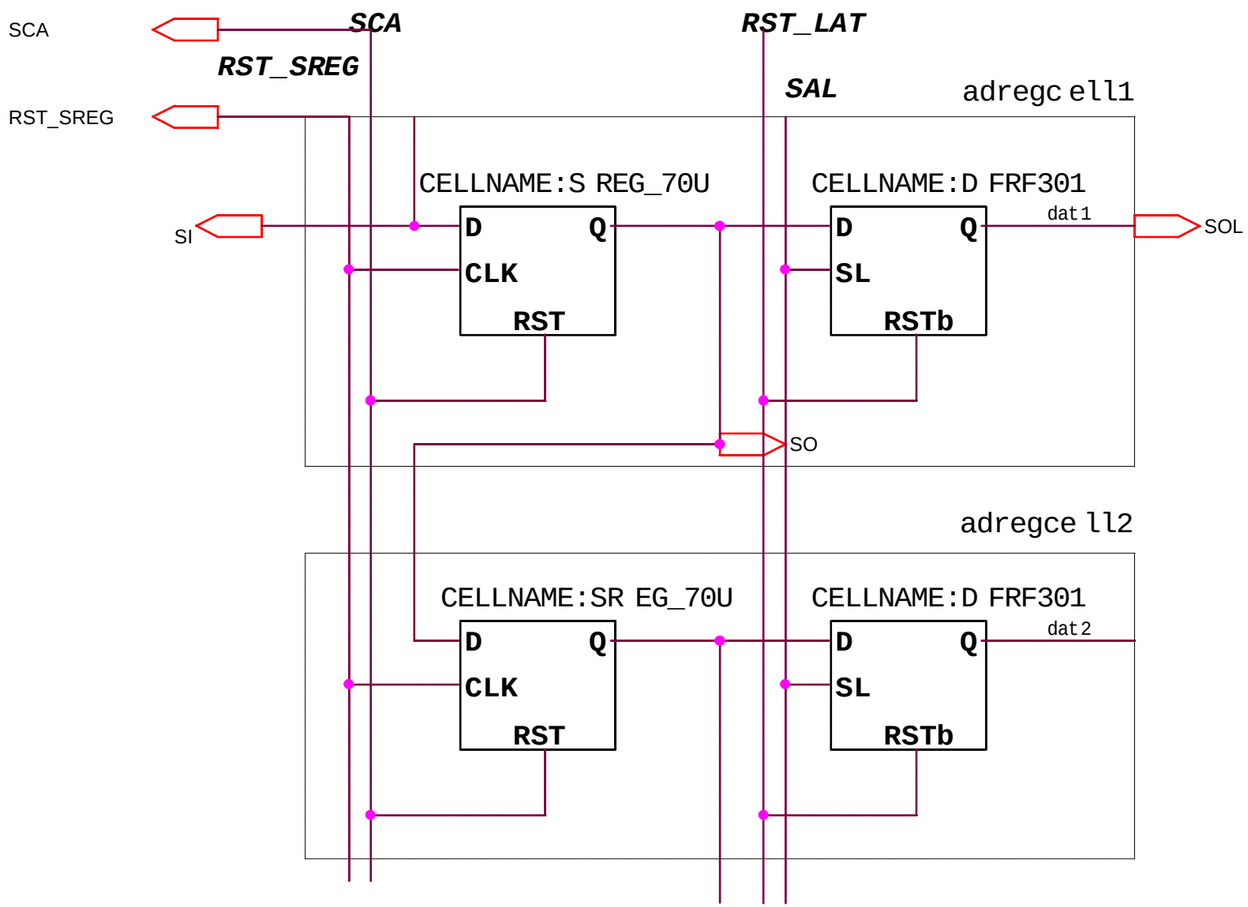

cell structure o f tgl_adreg
CELLNAME:S REG_ADD

TGL98.V2 REGISTER CELLS I&C DIVISION - OAK RIDGE NATIONAL LABORATORY			
Size A	Document Number 4	TGL98.V2 SCHEMATICS DESIGNERS: W.L.BRYAN, U.JAGADISH	Rev
Date: Monday, December 07, 1998		Sheet 1 of 1	

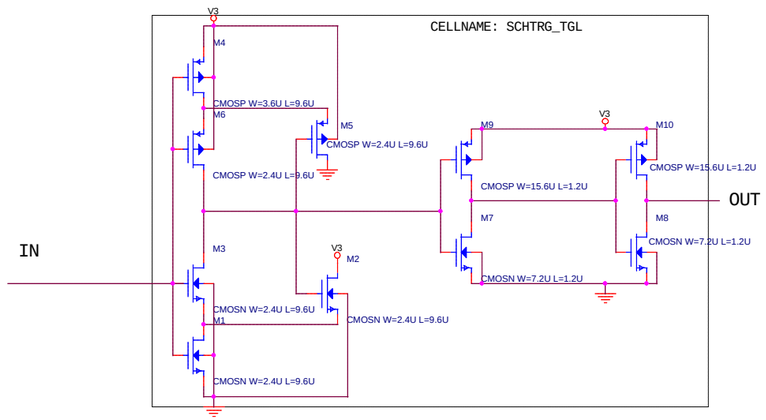

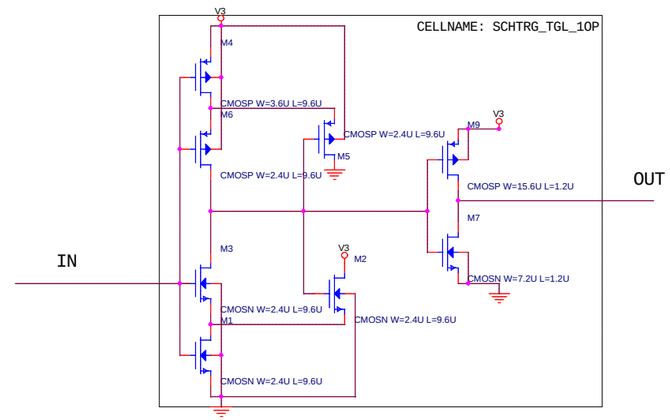

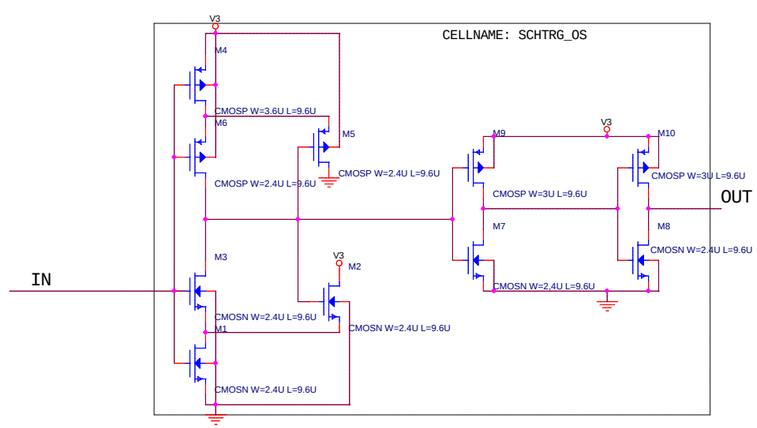

TGL98.V3 SCHMIDT TRIGGER CIRCUITS I&C DIVISION - OAK RIDGE NATIONAL LABORATORY			
Size C	Document Number 8	TGL98 SCHEMATICS DESIGNERS: L.G.CLONTS, W.L.BRYAN, U.JAGADISH	Rev
Date: Monday, December 07, 1998		Sheet 1 of 1	

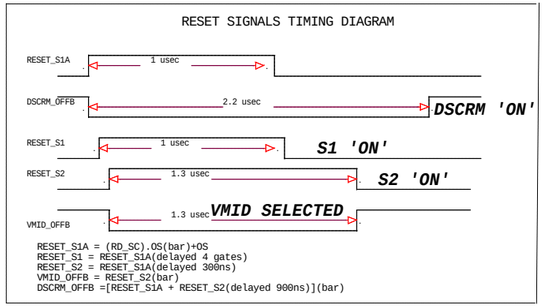

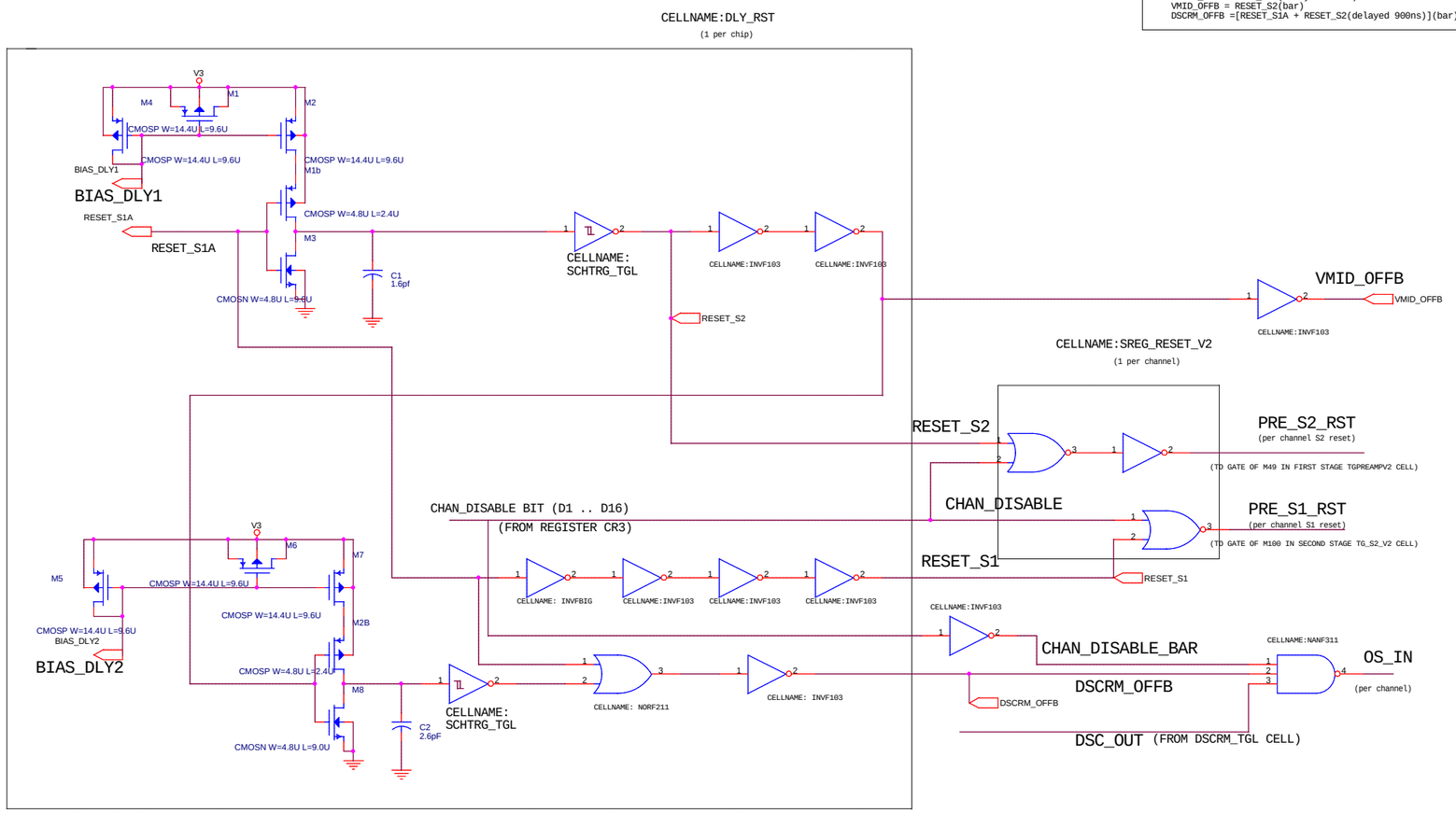

REF: RST_GEN

TGL98.V2 INTERNAL RESETS GENERATOR I&C DIVISION - OAK RIDGE NATIONAL LABORATORY		
Size C	Document Number TGL98.V2 SCHEMATICS DESIGNERS: W.L.BRYAN, U.JAGADISH	Rev
Date: Monday, December 07, 1998	Sheet 1 of 1	

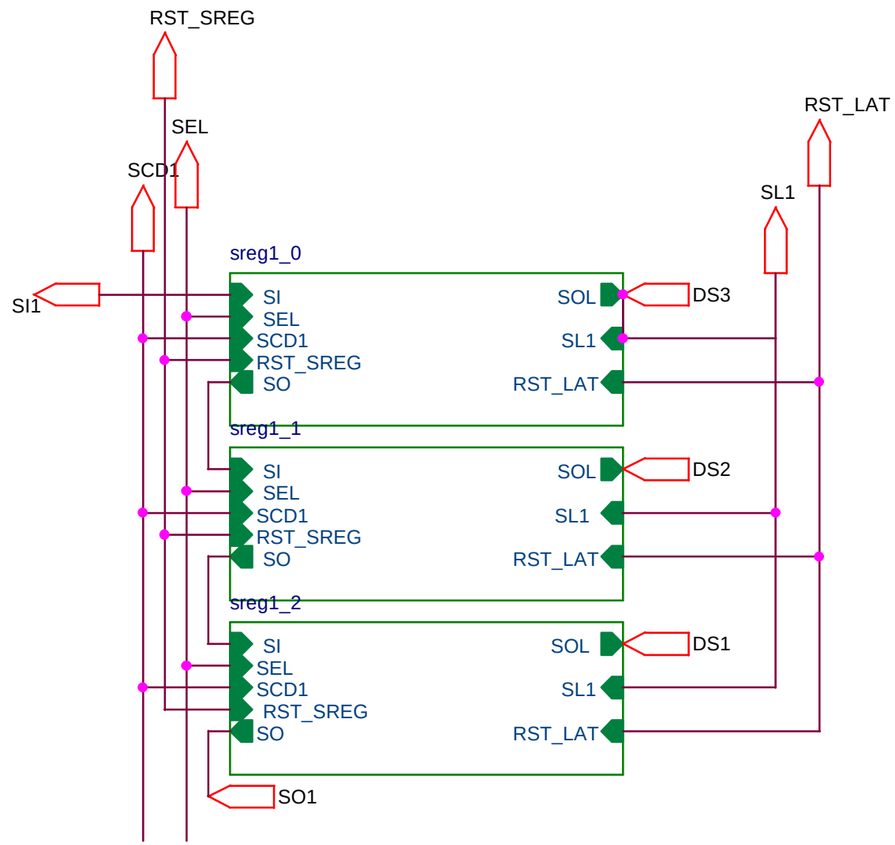

REF: CR1_PARTB

TGL98.V2 LEAKAGE SLOPE MUX BITS I&C DIVISION - OAK RIDGE NATIONAL LABORATORY			
Size A	Document Number TGL98.V2 SCHEMATICS DESIGNERS: W.L.BRYAN, U.JAGADISH		Rev
Date: Monday, December 07, 1998		Sheet 1 of 1	

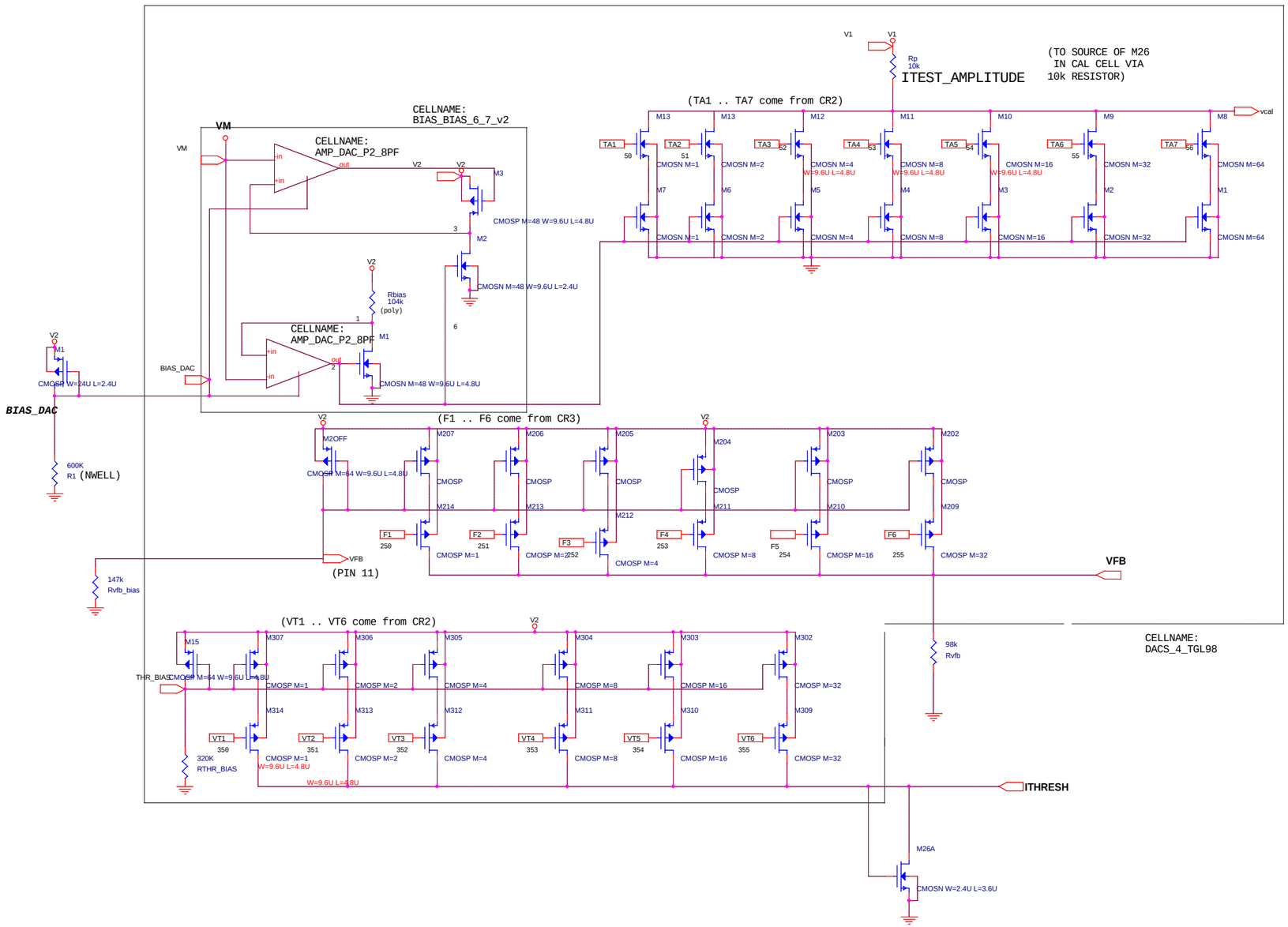

REF: DACS

TGL98.V2 D/A CONVERTER DIAGRAM I&C DIVISION - OAK RIDGE NATIONAL LABORATORY		
Size C	Document Number TGL98.V2 SCHEMATICS DESIGNERS: W.L.BRYAN, U.JAGADISH	Rev
Date: Monday, December 07, 1998	Sheet 1 of 1	

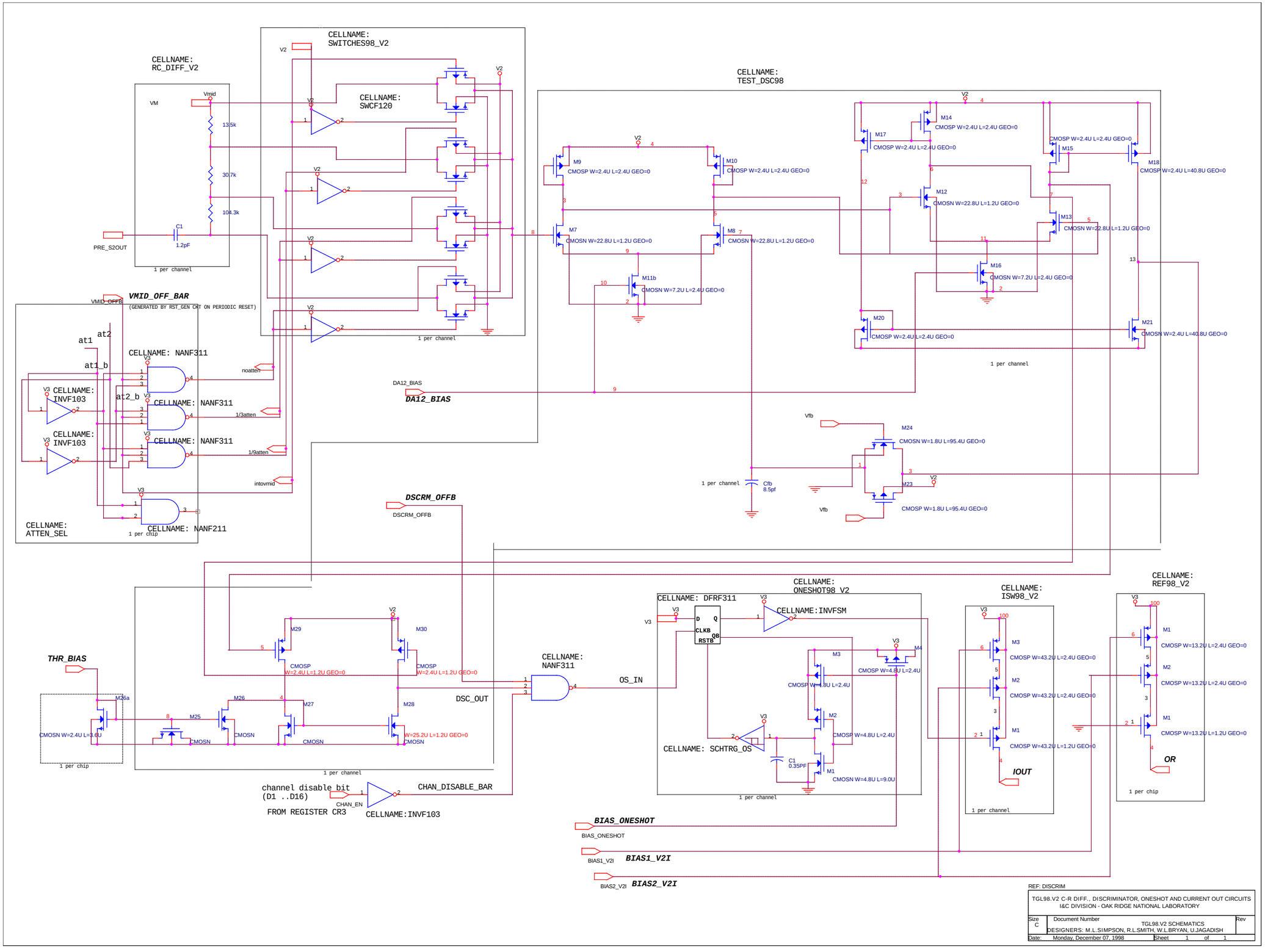
CELLNAME: RC_DIFF_V2
VM
Vmid
13.5k
30.7k
104.3k
C1
1.2pF
PRE_S2OUT
1 per channel
CELLNAME: SWITCHES98_V2
CELLNAME: SWCF120
V2
1 per channel
CELLNAME: TEST_DSC98
M9
CMOSP W=2.4U L=2.4U GEO=0
M10
CMOSP W=2.4U L=2.4U GEO=0
M7
CMOSN W=22.8U L=1.2U GEO=0
M8
CMOSN W=22.8U L=1.2U GEO=0
M11b
CMOSN W=7.2U L=2.4U GEO=0
M14
CMOSP W=2.4U L=2.4U GEO=0
M17
CMOSP W=2.4U L=2.4U GEO=0
M15
CMOSP W=2.4U L=2.4U GEO=0
M18
CMOSP W=2.4U L=40.8U GEO=0
M12
CMOSN W=22.8U L=1.2U GEO=0
M13
CMOSN W=22.8U L=1.2U GEO=0
M16
CMOSN W=7.2U L=2.4U GEO=0
M20
CMOSP W=2.4U L=2.4U GEO=0
M21
CMOSN W=2.4U L=40.8U GEO=0
1 per channel
VMID_OFFB
VMID_OFF_BAR
(GENERATED BY RST_GEN CRT ON PERIODIC RESET)
at1
at2
at1_b
at2_b
CELLNAME: NANF311
CELLNAME: INVF103
noatten
1/3atten
1/9atten
intovmid
CELLNAME: NANF211
CELLNAME: ATTEN_SEL
1 per chip
DA12_BIAS
DA12_BIAS
Vfb
M24
CMOSN W=1.8U L=95.4U GEO=0
M23
CMOSP W=1.8U L=95.4U GEO=0
1 per channel
Cfb
8.5pf
DSCRM_OFFB
DSCRM_OFFB
THR_BIAS
M26a
CMOSN W=2.4U L=3.6U
M25
M26
M27
M28
M29
M30
CMOSP W=2.4U L=1.2U GEO=0
CMOSP W=2.4U L=1.2U GEO=0
W=25.2U L=1.2U GEO=0
CMOSN
1 per chip
1 per channel
DSC_OUT
CELLNAME: NANF311
OS_IN
CELLNAME: DFRF311
D
Q
CLKB
QB
RSTB
CELLNAME: ONESHOT98_V2
CELLNAME:INVFSM
M3
M4
CMOSP W=4.8U L=2.4U
CMOSP W=4.8U L=2.4U
M2
CMOSP W=4.8U L=2.4U
M1
CMOSN W=4.8U L=9.0U
CELLNAME: SCHTRG_OS
C1
0.35PF
1 per channel
CELLNAME: ISW98_V2
M3
CMOSP W=43.2U L=2.4U GEO=0
M2
CMOSP W=43.2U L=2.4U GEO=0
M1
CMOSP W=43.2U L=1.2U GEO=0
IOUT
1 per channel
CELLNAME: REF98_V2
M1
CMOSP W=13.2U L=2.4U GEO=0
M2
CMOSP W=13.2U L=2.4U GEO=0
M1
CMOSP W=13.2U L=1.2U GEO=0
OR
1 per chip
channel disable bit
(D1 ..D16)
FROM REGISTER CR3
CHAN_EN
CHAN_DISABLE_BAR
CELLNAME:INVF103
BIAS_ONESHOT
BIAS_ONESHOT
BIAS1_V2I
BIAS1_V2I
BIAS2_V2I
BIAS2_V2I
REF: DISCRIM
TGL98.V2 C-R DIFF., DISCRIMINATOR, ONESHOT AND CURRENT OUT CIRCUITS
I&C DIVISION - OAK RIDGE NATIONAL LABORATORY
Size C
Document Number
TGL98.V2 SCHEMATICS
Rev
DESIGNERS: M.L.SIMPSON, R.L.SMITH, W.L.BRYAN, U.JAGADISH
Date: Monday, December 07, 1998
Sheet 1 of 1

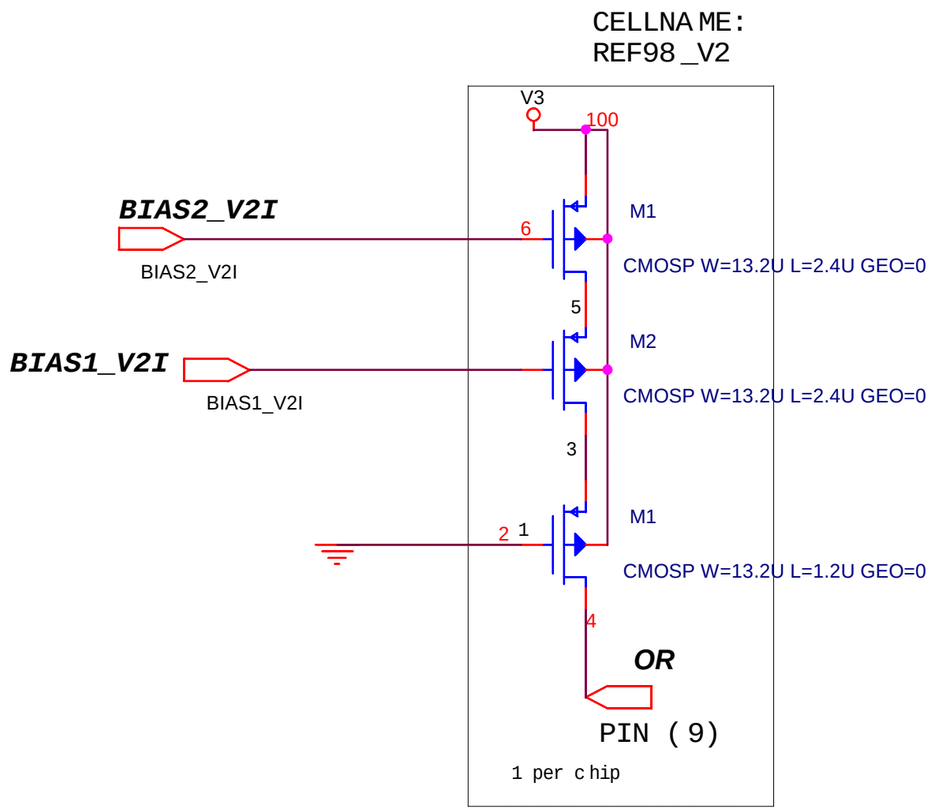

REF: REF_V2

TGL98.V2 REFERENCE CURRENT CELL I&C DIVISION - OAK RIDGE NATIONAL LABORATORY			
Size A	Document Number TGL98.V2 SCHEMATICS DESIGNERS: M.L.SIMPSON, W.L.BRYAN, U.JAGADISH		Rev
Date: Monday, December 07, 1998		Sheet 1 of 1	

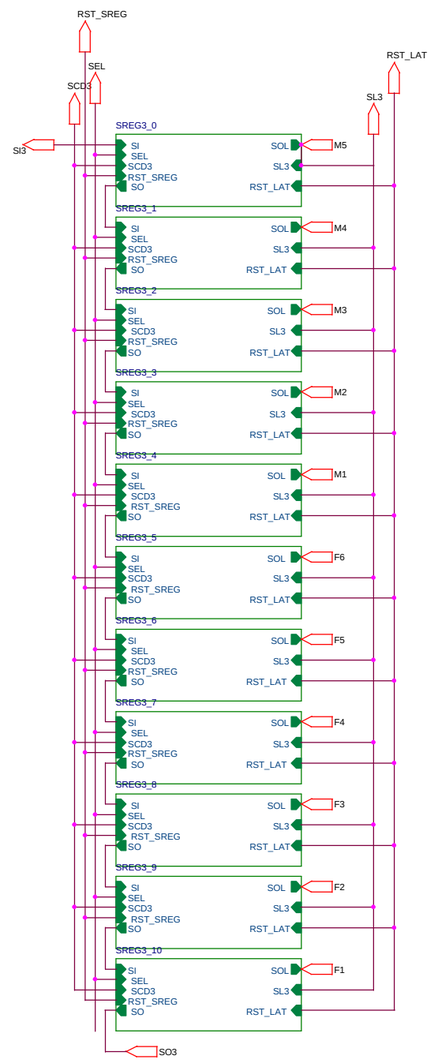

REF: CR3_PARTB

TGL98.V2 OUTPUT MUX AND FEEDBACK VOLTAGE SELECT BITS
I&C DIVISION - OAK RIDGE NATIONAL LABORATORY

Size	Document Number	Rev
C	TGL98.V2 SCHEMATICS DESIGNERS: W.L.BRYAN, U.JAGADISH	

Date: Monday, December 07, 1998 Sheet 1 of 1

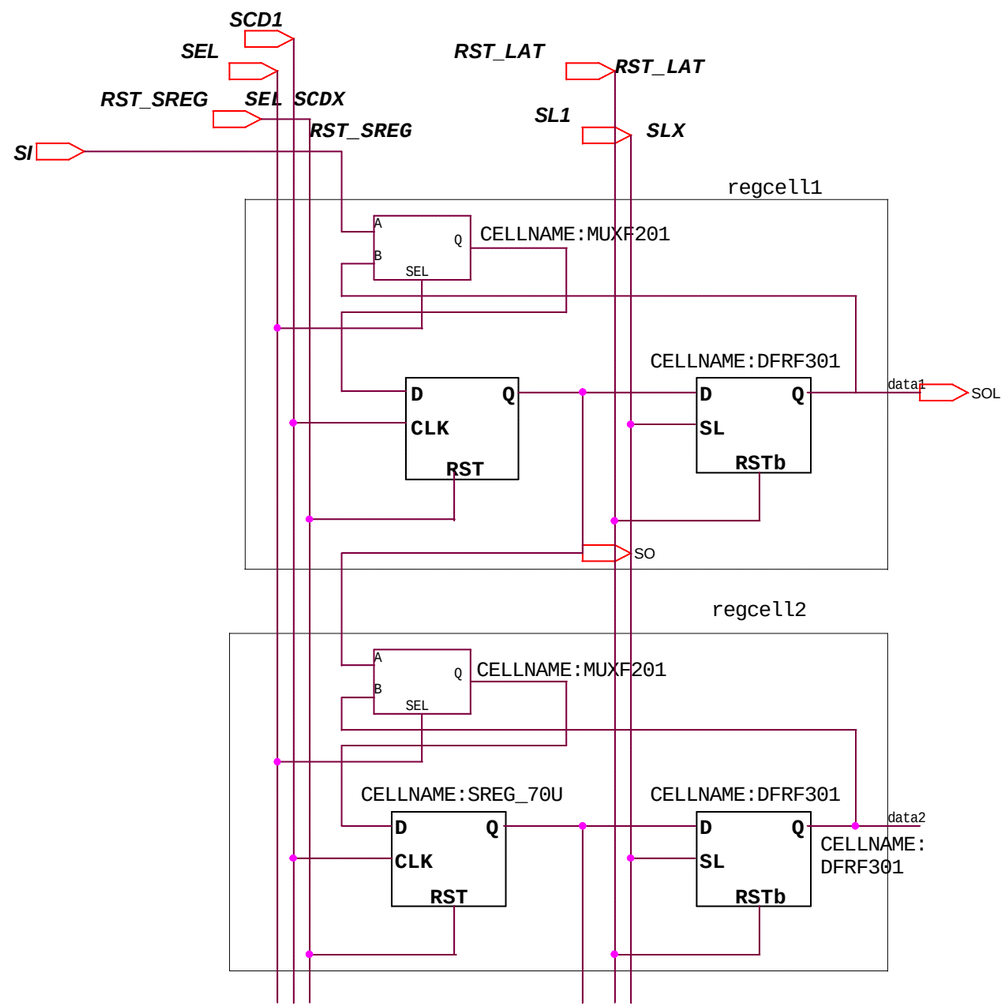

cell structure of CR1,CR2 & CR3 registers

CELLNAME:SREG_RDBK FOR CR1
CELLNAMES: SREG_70U;
DFRF301 FOR CR2 AND CR3

REF: SREG1

TGL98.V2 CR1 REGISTER CELL I&C DIVISION - OAK RIDGE NATIONAL LABORATORY			
Size B	Document Number TGL98.V2 SCHEMATICS DESIGNERS: W.L.BRYAN, U.JAGADISH		Rev
Date: Monday, December 07, 1998	Sheet 1 of 1		

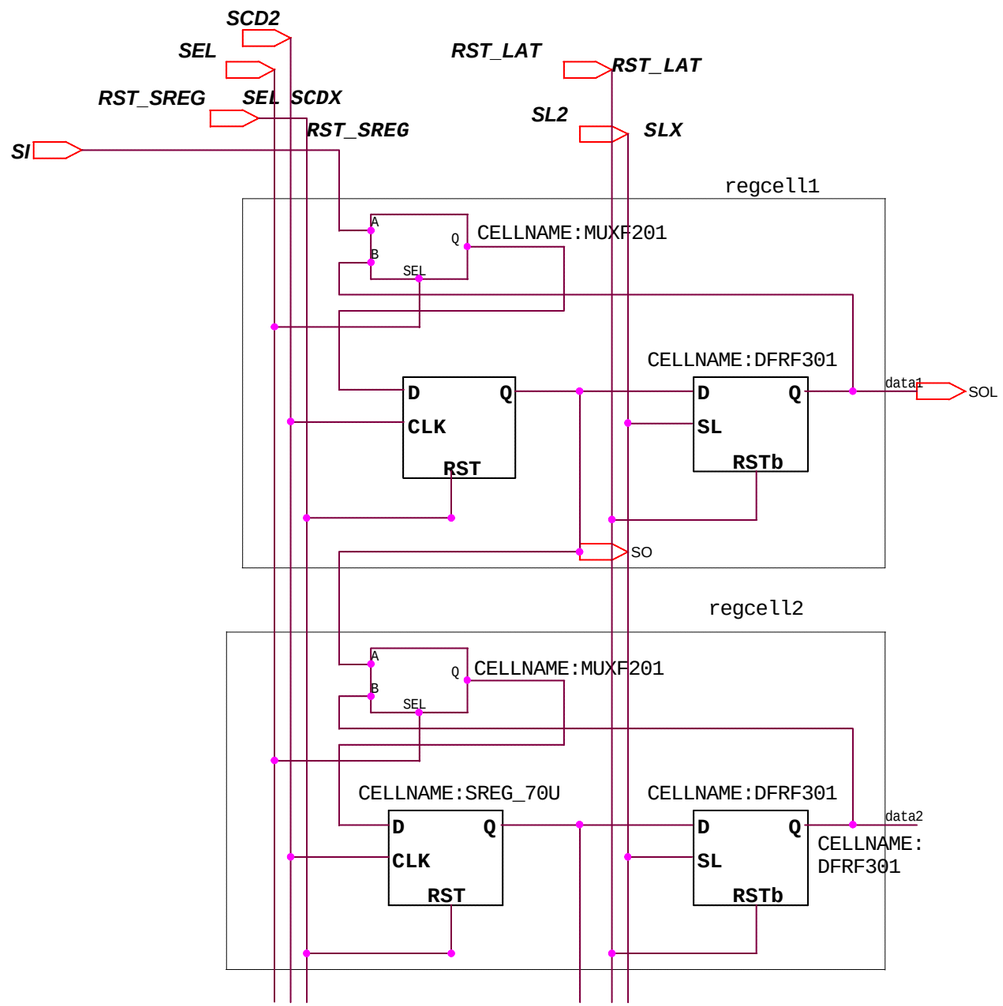

cell structure of CR1,CR2 & CR3 registers

CELLNAME:SREG_RDBK FOR CR1
CELLNAMES: SREG_70U;
DFRF301 FOR CR2 AND CR3

REF: SREG2

TGL98.V2 CR2 REGISTER CELL I&C DIVISION - OAK RIDGE NATIONAL LABORATORY			
Size B	Document Number	TGL98.V2 SCHEMATICS DESIGNERS: W.L.BRYAN, U.JAGADISH	Rev
Date: Monday, December 07, 1998		Sheet 1 of 1	

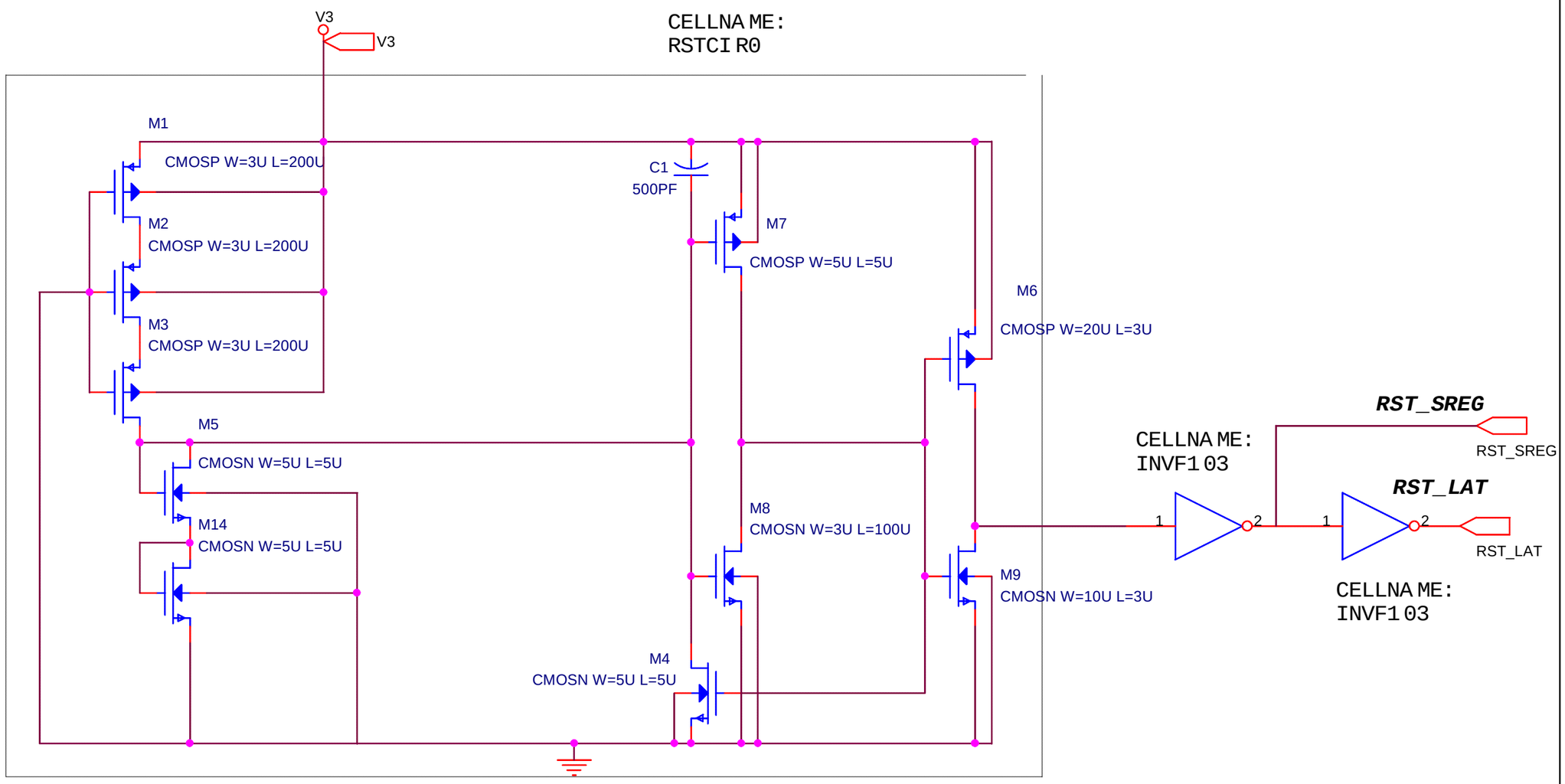

REF: POWON_RST

TGL98.V2 POWER ON RESET CIRCUITRY I&C DIVISION - OAK RIDGE NATIONAL LABORATORY		
Size A	Document Number TGL98.V2 SCHEMATICS DESIGNERS: J.ROCHELLE, L.G.CLONTS	Rev
Date: Monday, December 07, 1998	Sheet 1 of 1	

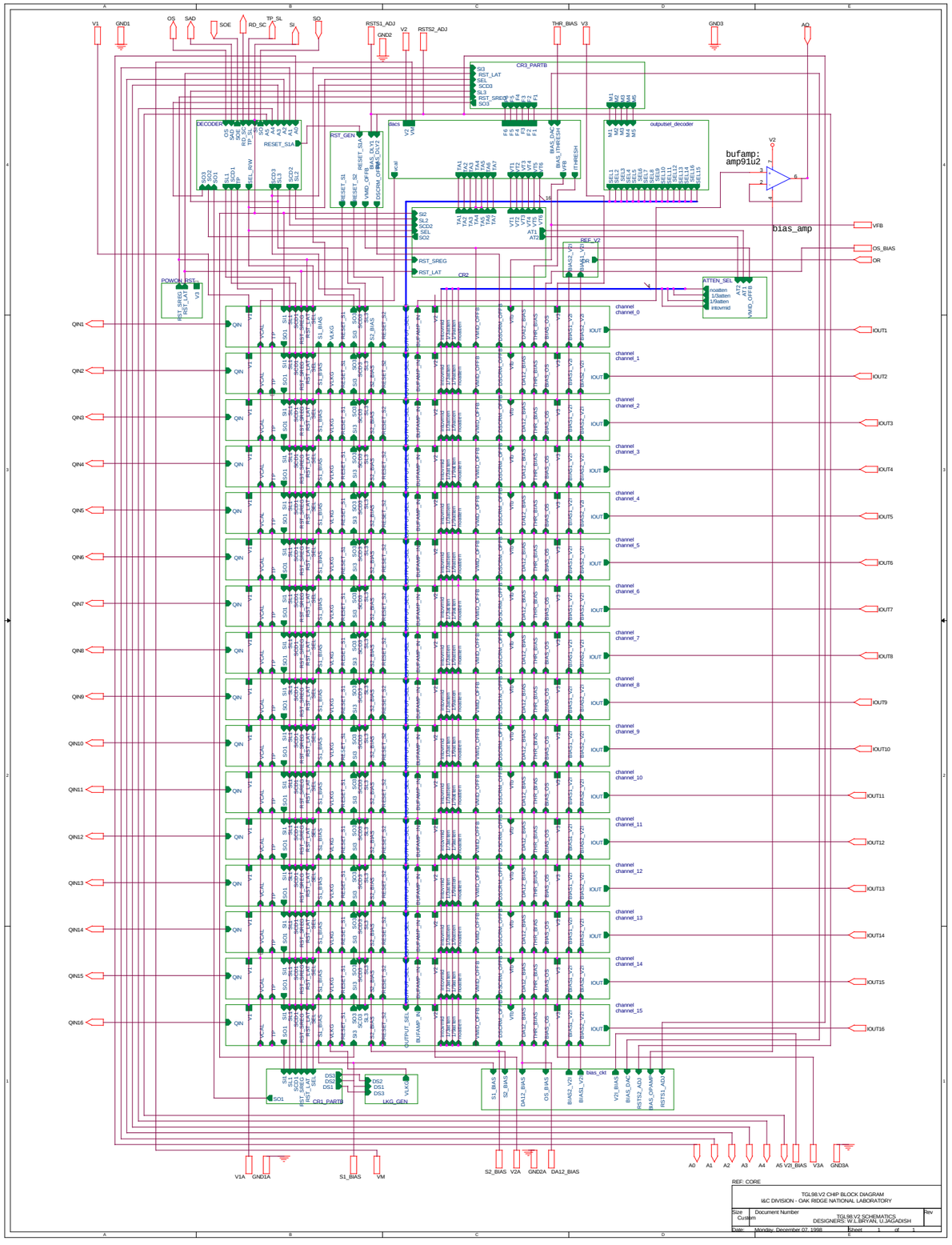

REF: CORE

TGL98.V2 CHIP BLOCK DIAGRAM
I&C DIVISION - OAK RIDGE NATIONAL LABORATORY

Size	Document Number	Rev
Custom	TGL98.V2 SCHEMATICS DESIGNERS: W.L.BRYAN, U.JAGADISH	
Date: Monday, December 07, 1998	Sheet 1 of 1	

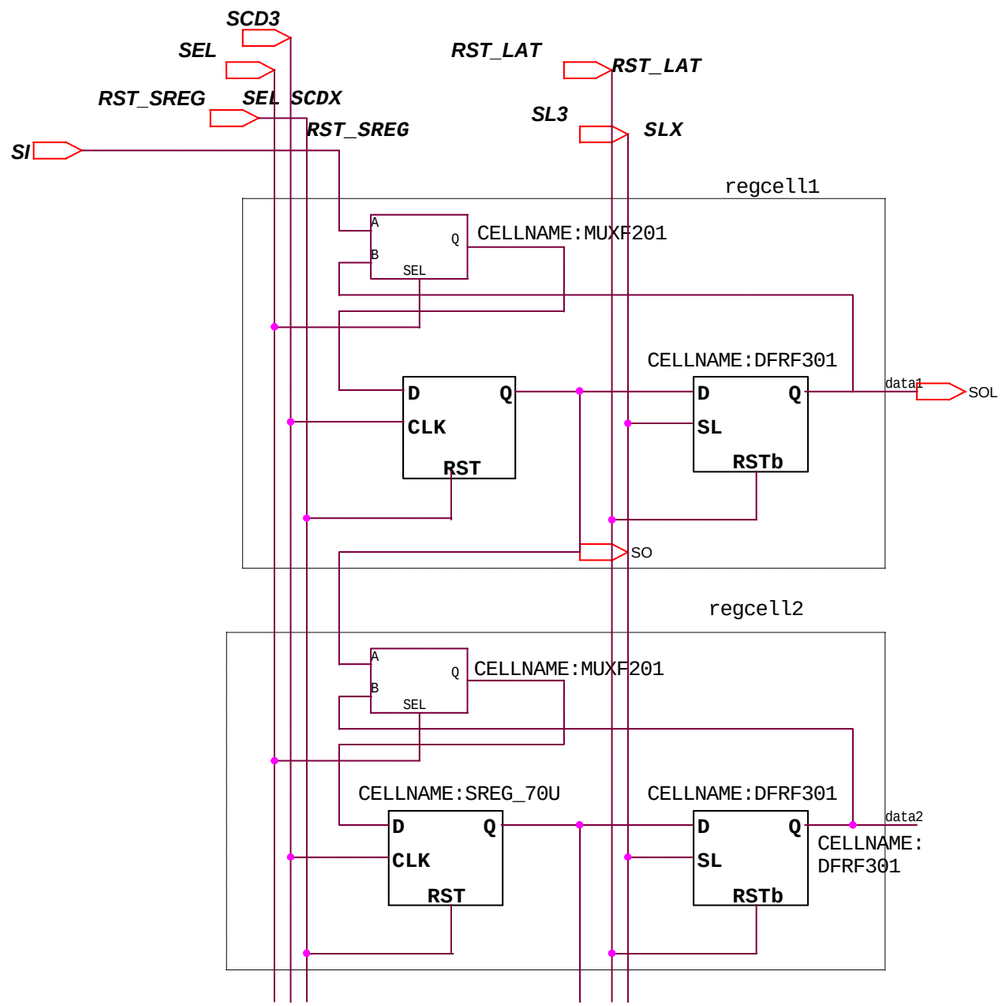

cell structure of CR1,CR2 & CR3 registers

CELLNAME:SREG_RDBK FOR CR1
CELLNAMES: SREG_70U;
DFRF301 FOR CR2 AND CR3

REF: SREG3

TGL98.V2 CR3 REGISTER CELL I&C DIVISION - OAK RIDGE NATIONAL LABORATORY		
Size B	Document Number TGL98.V2 SCHEMATICS DESIGNERS: W.L.BRYAN, U.JAGADISH	Rev
Date: Monday, December 07, 1998	Sheet 1 of 1	