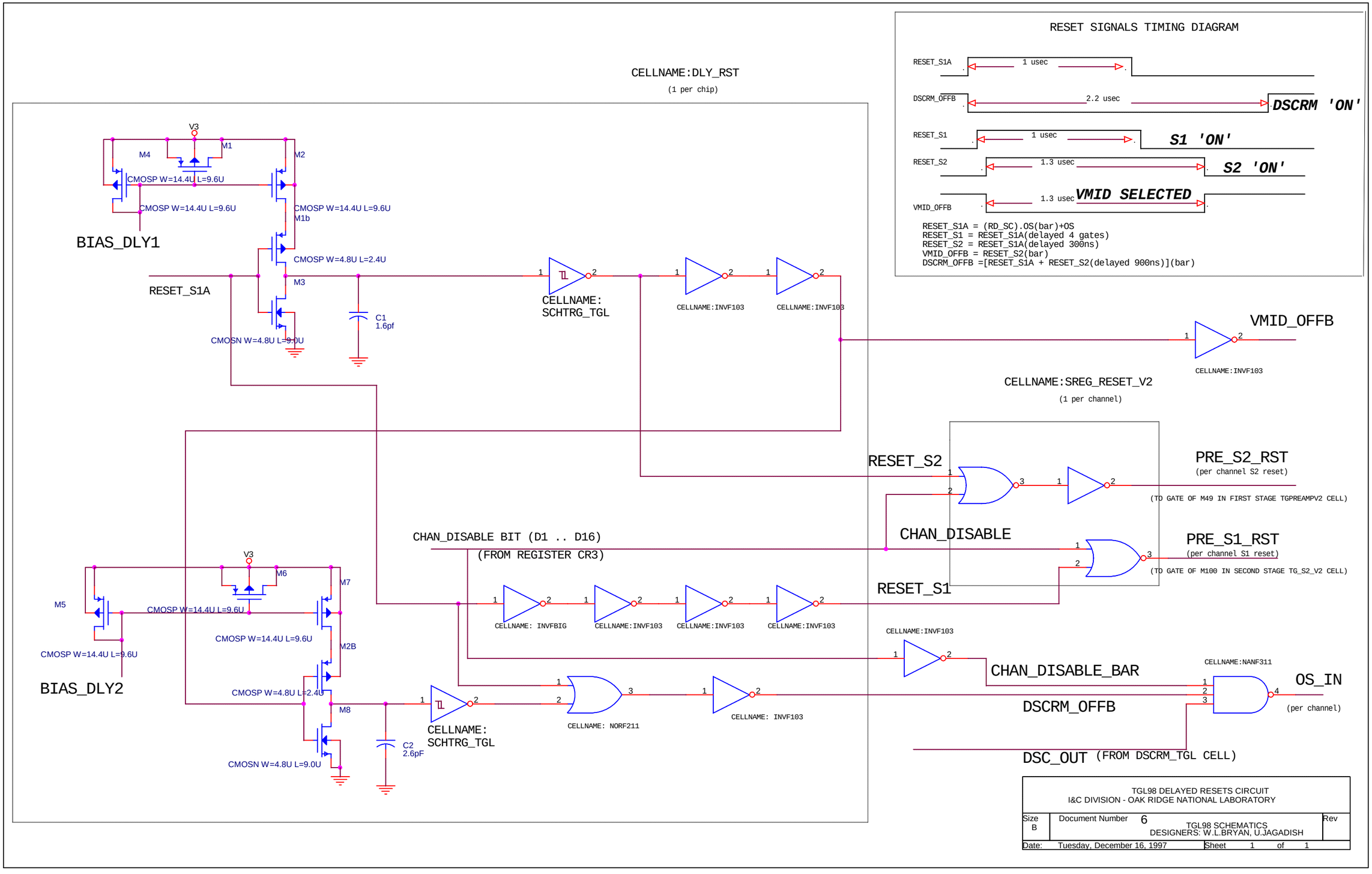

TGL98 DELAYED RESETS CIRCUIT
I&C DIVISION - OAK RIDGE NATIONAL LABORATORY

Size	Document Number		Rev
B	6	TGL98 SCHEMATICS DESIGNERS: W.L.BRYAN, U.JAGADISH	
Date: Tuesday, December 16, 1997		Sheet 1 of 1	