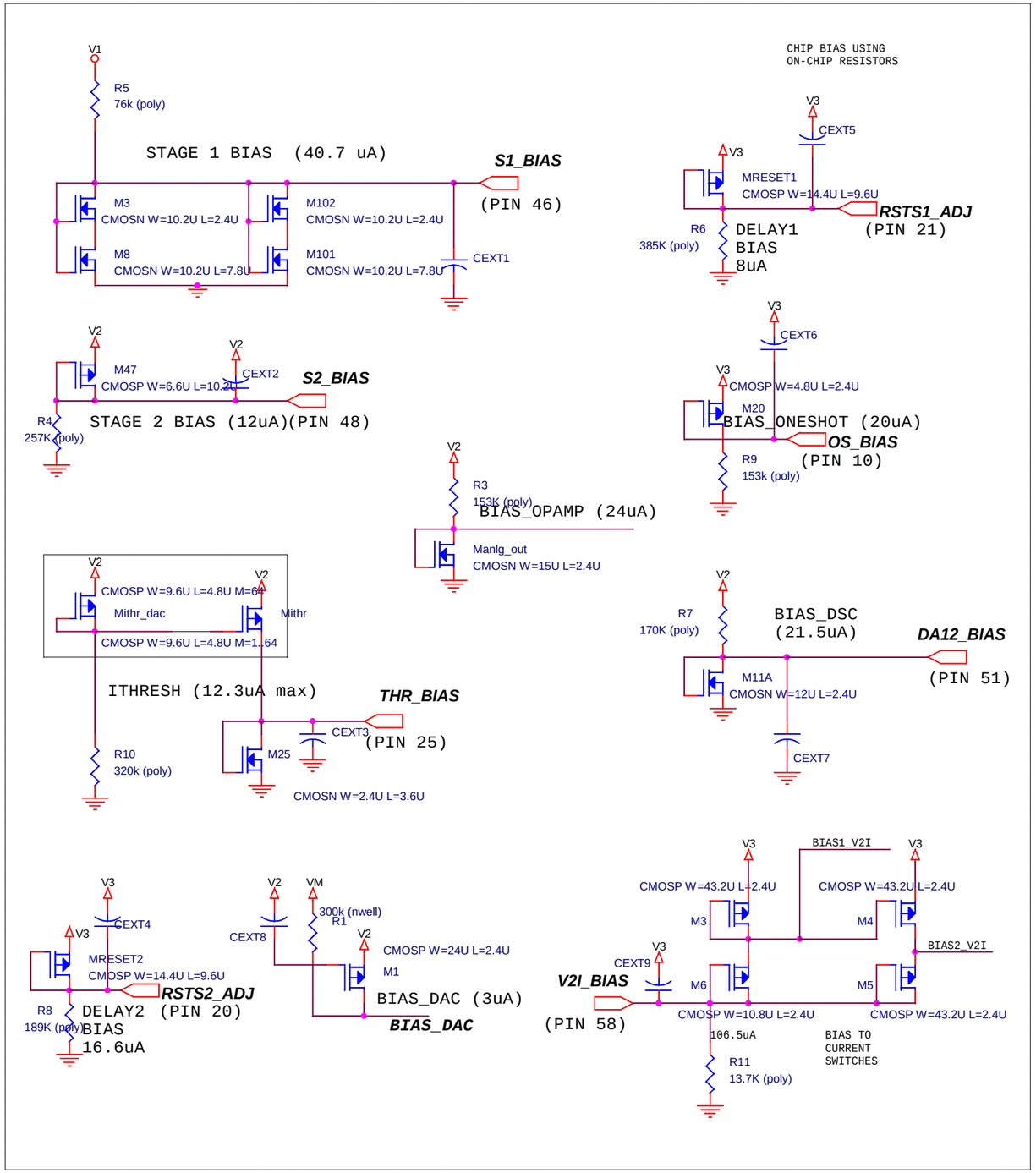

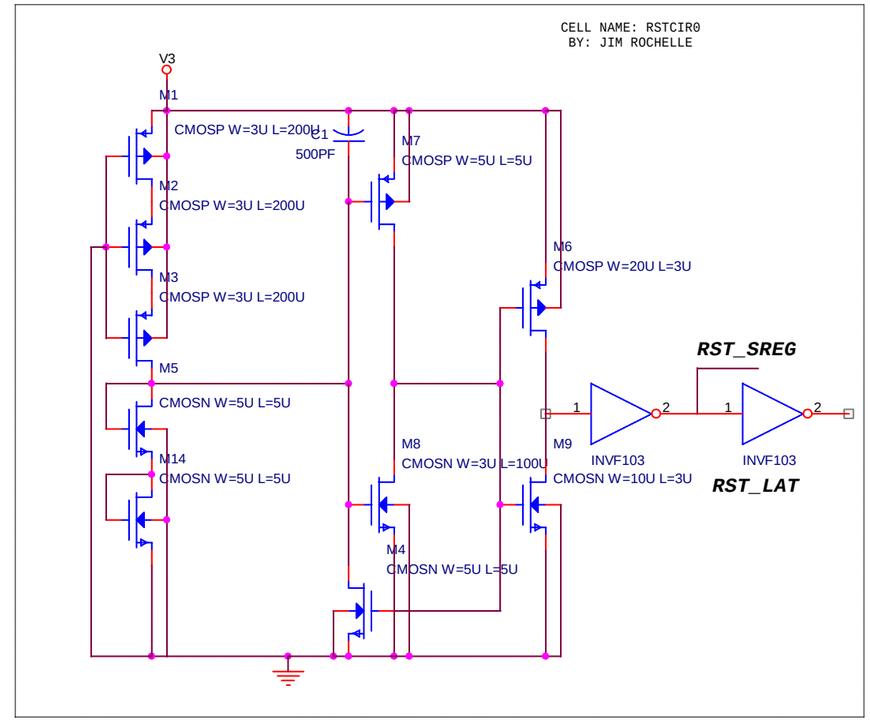

TGL98 CHIP BIAS AND POWER ON RESET CIRCUIT I&C DIVISION - OAK RIDGE NATIONAL LABORATORY			
Size B	Document Number 14	TGL98 SCHEMATICS DESIGNERS: W.L.BRYAN, U.JAGADISH	Rev
Date: Thursday, February 26, 1998		Sheet 1 of 1	