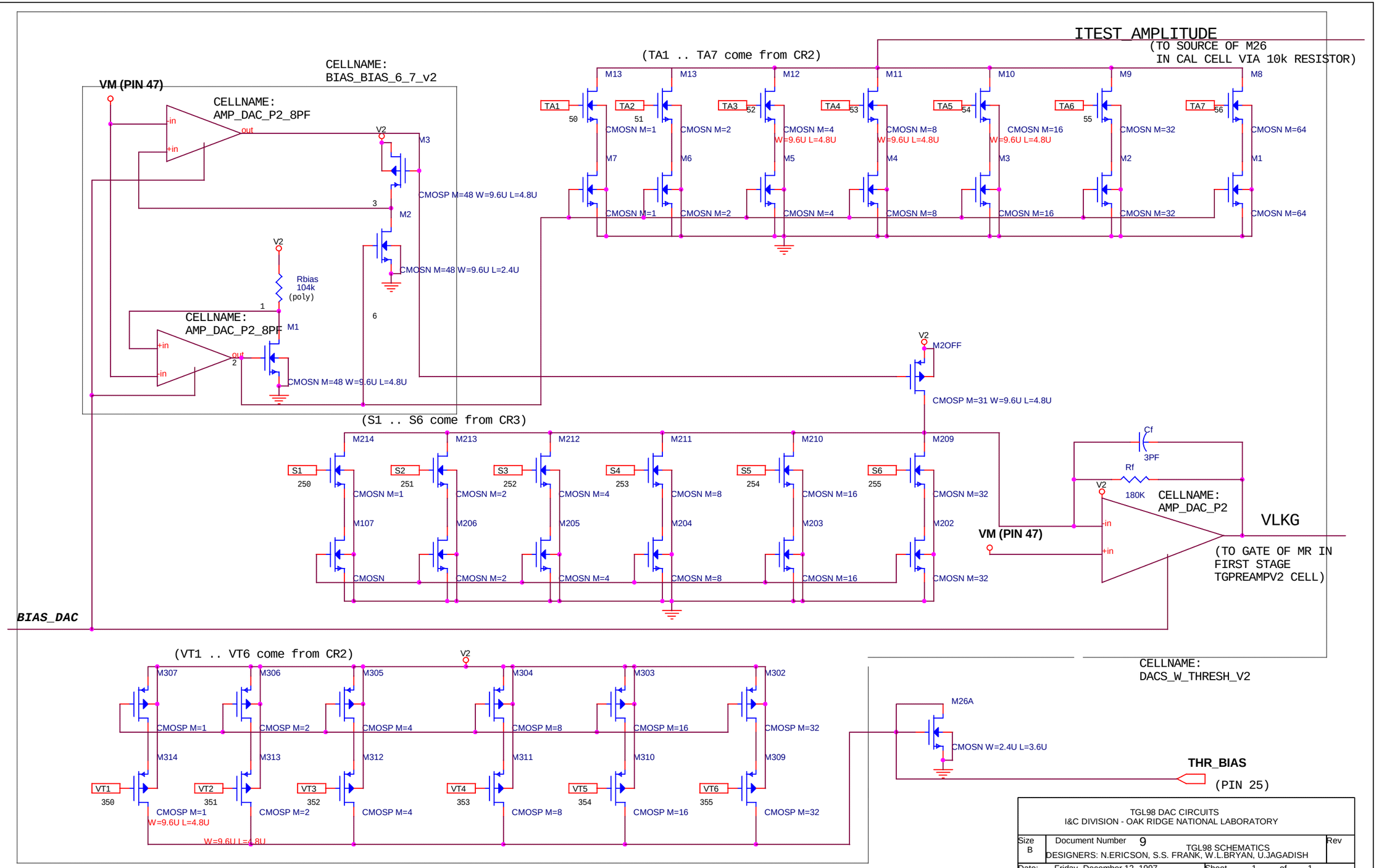

TGL98 DAC CIRCUITS I&C DIVISION - OAK RIDGE NATIONAL LABORATORY		
Size B	Document Number 9 TGL98 SCHEMATICS DESIGNERS: N.ERICSON, S.S. FRANK, W.L.BRYAN, U.JAGADISH	Rev
Date: Friday, December 12, 1997	Sheet 1 of 1	