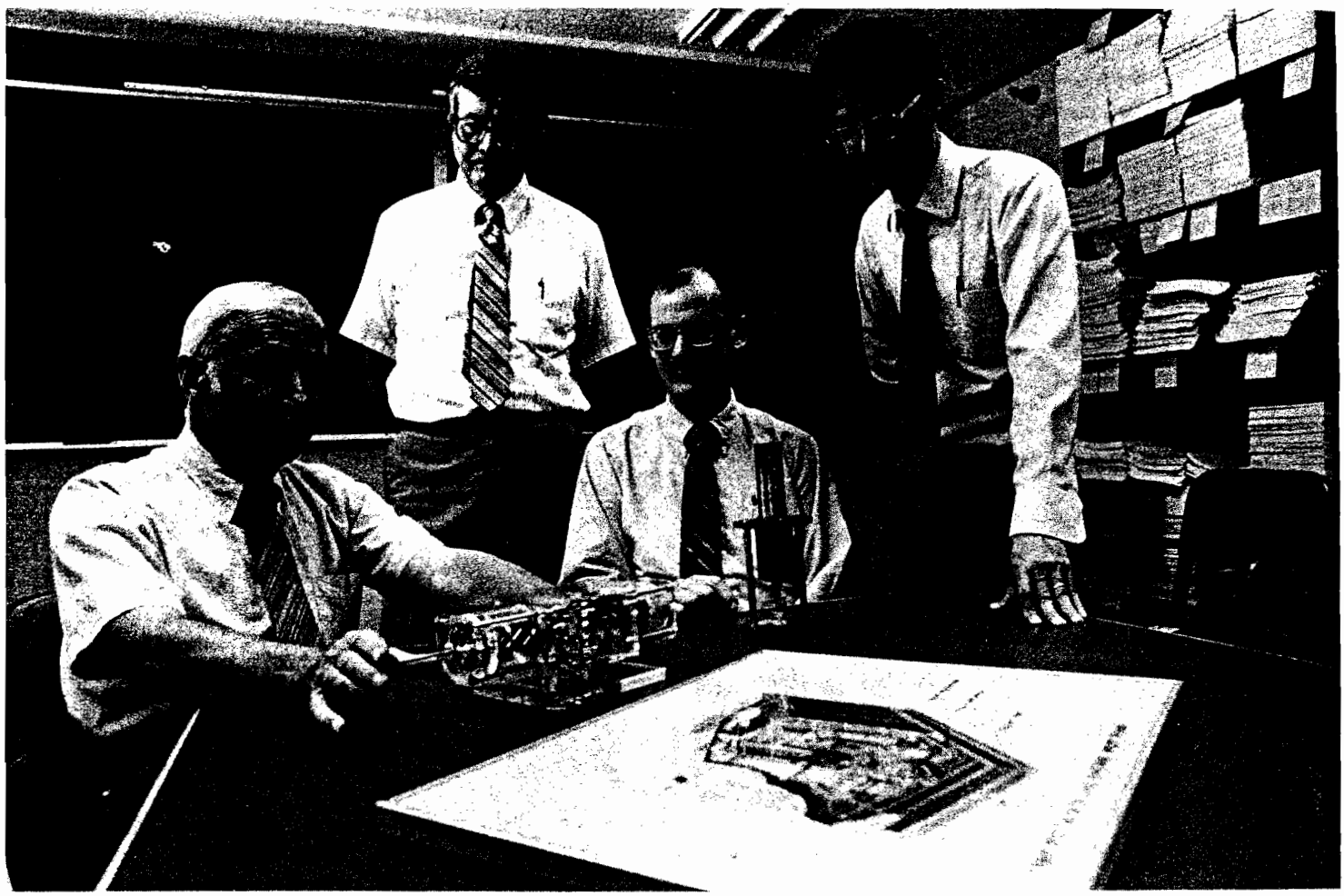

The Promise of Gas-Fired Heat Pumps for

By FREDERICK CRESWICK, ROBERT DEVAULT, FANG CHEN, and GEORGE PRIVON

The potential economic and energy-efficiency benefits of gas-fired heat pumps (GFHPs) for heating and cooling buildings are enormous. The experimental heat pump systems that have been developed under the Building Equipment Research Program at Oak Ridge National Laboratory can operate in the heating mode with a coefficient of performance (COP) approaching 2.0. That is, the heat delivered to the living space is twice the heating value of the natural gas. This COP is double the maximum possible efficiency of the most advanced gas furnace.

GFHPs developed for use in the United States also deliver cooling efficiently. In the cooling mode, they will probably use no more primary energy than the best electric air conditioners likely to be developed in the next decade. Primary energy is the fuel energy consumed—at coal-fired power plants and nuclear power stations, for example—to produce electricity.

At full penetration, we estimate that GFHPs could annually save 0.5 quad per year of primary energy now used in the United States for space conditioning in residential and commercial buildings. The corresponding economic benefit at current energy prices is over $6 billion per year. In addition, during the cooling season, GFHPs would benefit gas utilities, which have excess capacity in the summer, and electrical utilities, some of which have problems meeting peak demands for summer air conditioning.

In spite of these major potential benefits, very little internally

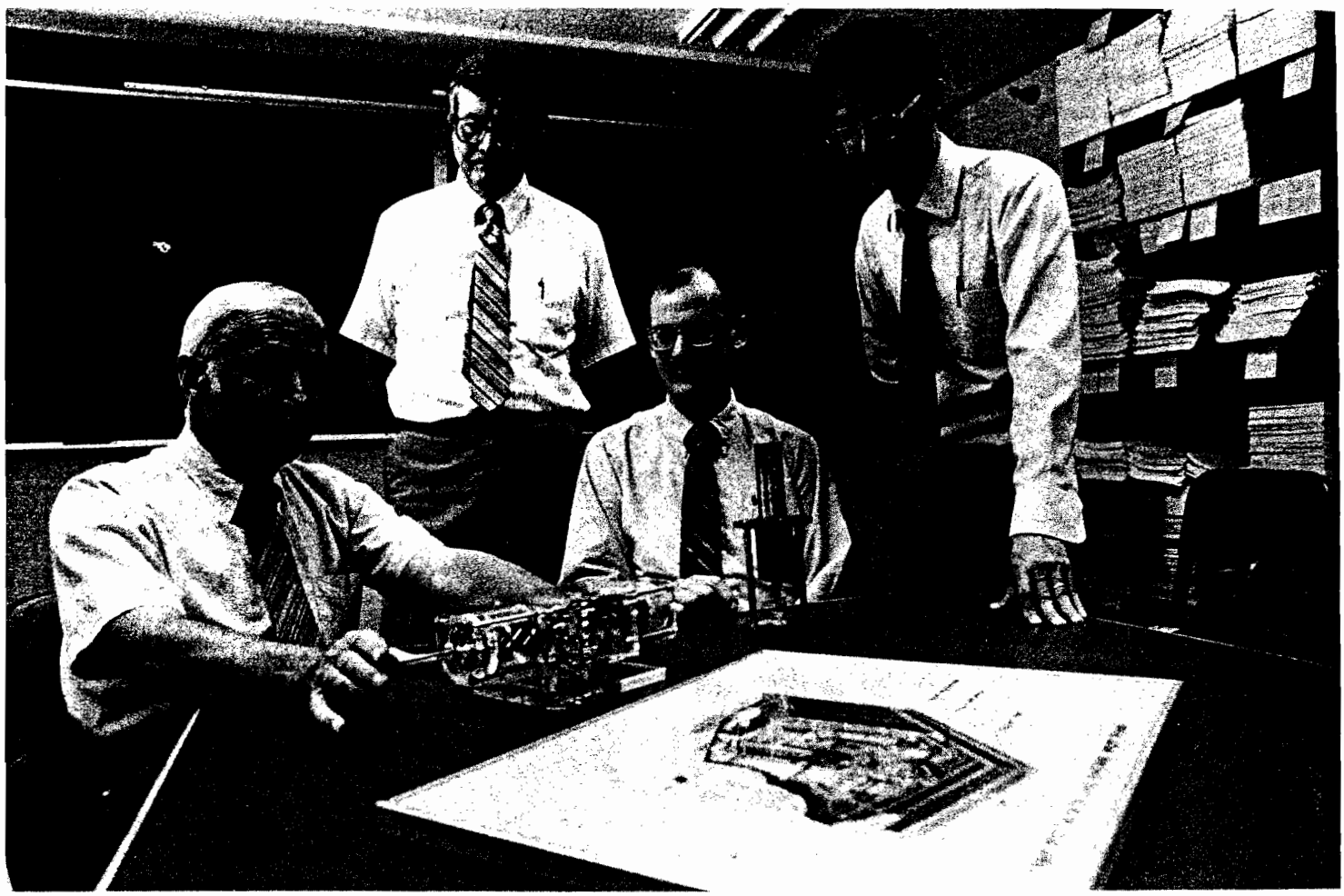

The Promise of Gas-Fired Heat Pumps for

By FREDERICK CRESWICK, ROBERT DEVAULT, FANG CHEN, and GEORGE PRIVON

The potential economic and energy-efficiency benefits of gas-fired heat pumps (GFHPs) for heating and cooling buildings are enormous. The experimental heat pump systems that have been developed under the Building Equipment Research Program at Oak Ridge National Laboratory can operate in the heating mode with a coefficient of performance (COP) approaching 2.0. That is, the heat delivered to the living space is twice the heating value of the natural gas. This COP is double the maximum possible efficiency of the most advanced gas furnace.

GFHPs developed for use in the United States also deliver cooling efficiently. In the cooling mode, they will probably use no more primary energy than the best electric air conditioners likely to be developed in the next decade. Primary energy is the fuel energy consumed—at coal-fired power plants and nuclear power stations, for example—to produce electricity.

At full penetration, we estimate that GFHPs could annually save 0.5 quad per year of primary energy now used in the United States for space conditioning in residential and commercial buildings. The corresponding economic benefit at current energy prices is over $6 billion per year. In addition, during the cooling season, GFHPs would benefit gas utilities, which have excess capacity in the summer, and electrical utilities, some of which have problems meeting peak demands for summer air conditioning.

In spite of these major potential benefits, very little internally

Frederick A. Creswick has 35 years' experience in research and development (R&D) work on a variety of thermal-mechanical systems. He has a B.S. degree from Wayne State University in Detroit and an M.S. degree in mechanical engineering from Ohio State University. He worked on developing automotive gas-turbine engines for seven years at General Motors Research Laboratories. During his 18 years at Battelle Memorial Institute–Columbus Laboratories, he was involved in research on gas and refrigerant compressors, including a free-piston engine-compressor for air-conditioning systems, Stirling engines, automotive engine fuel systems, and exhaust catalyst performance. Since coming to work at ORNL in 1977, Creswick has worked in various capacities on heat pump R&D. He is a registered professional engineer in Ohio. Since 1979 he has been alternate U.S. delegate to the International Energy Agency Executive Committee on Advanced Heat Pump Systems.

Robert C. DeVault is technical program manager for the Absorption Heat Pump Program at ORNL. He has a master's degree in engineering science from the University of Tennessee. He came to ORNL as a full-time consultant to the Energy Division in 1975 and became an ORNL employee in 1977 when he joined the Regional and Urban Studies Section of ORNL's Energy Division. In 1980 he transferred to the heat pump program of the Efficiency and Renewables Research Section of the Energy Division. In 1987 he received an Inventor Award from Martin Marietta Energy Systems, Inc., which cited him for "exceptional innovation and creativity that led to several inventions in advanced absorption heat pump technology with large potential benefits."

Fang Chen is a group leader in the Energy Division. He is responsible for heat pump projects involving Stirling-engine-driven and novel cycles for the Building Equipment Research Program. He has a B.S. degree in mechanical engineering from National Taiwan University and a Ph.D. degree in applied physics from Harvard University. Before joining the Laboratory staff, he worked for NUS Corporation in Rockville, Maryland, where he conducted studies in thermal environmental engineering. He also worked for the TRW Energy Systems Group in McLean, Virginia, in energy conversion and conservation.

George T. Privon is group leader in the Efficiency and Renewables Research Section of ORNL's Energy Division. A native of Chicago, he has an M.S. degree in mechanical engineering from the University of Kentucky. He began work at ORNL in May 1980 as a member of the heat pump group of the Energy Conservation Program. He holds a number of patents dealing with refrigerant compressor designs. Before coming to ORNL he held various positions of responsibility in research, design, and product development with the Carrier Corporation, Sundstrand Corporation, and Bristol Compressors.

Here, Privon, Creswick, DeVault, and Chen (from left) examine a plastic model showing the operation of a free-piston engine-compressor.

Buildings

funded research and development (R&D) on GFHPs had been conducted by U.S. equipment manufacturers when we began this program in 1978. Even today, almost all R&D on these devices is institutionally supported either by ORNL through the U.S. Department of Energy or by the Gas Research Institute. The reason: R&D on GFHPs is technically challenging, high risk, long term, and expensive. Because no demonstrated market exists, such R&D simply has not been an attractive investment for U.S. industry.

Fortunately, several different equipment concepts exist for GFHPs, although they fit into two basic categories: engine-driven and absorption systems. Early in the program, we decided after considering all the technical risks to undertake parallel approaches to achieving our goal: to advance the technology enough to demonstrate

ORNL has developed advanced absorption heat pump concepts that could outperform advanced gas-fired cycles being tested by subcontractors and has guided the design of industrially developed heat pumps driven by gas-fired Braun and Stirling engines. A goal of the work has been to develop economical gas-fired air-conditioning equipment for buildings to even out demand for electricity during the cooling season and increase the market for new reserves of natural gas.

its performance potential and to understand and quantify the remaining technical risks. Once our goal is achieved, private-sector organizations will have enough information to analyze the market potential of technologies developed in this program. We chose to pursue development of three existing technologies: the free-piston internal-combustion (Braun) engine compressor, the advanced absorption heat pump, and the Stirling engine compressor. Our work is sponsored by the Building Equipment Division of DOE's Office of Buildings and Community Systems.

Free-Piston IC Engine Compressor

One of the more obvious GFHP concepts uses a gas-fueled internal combustion (IC) engine to drive a heat pump. In this concept, the engine simply replaces the electric motor in a conventional electric heat pump. An important difference is that the energy in the engine exhaust and cooling water can be partly recovered, greatly increasing the heating efficiency of the engine-driven system.

The problem with the IC approach is that few, if any, small engines have the required durability for heat pump service. A heat pump can accumulate more than 3000 hours of operation in a year of service and ideally would have only one maintenance period in that time. By contrast, an automobile engine typically accumulates 2500 hours of operation in its entire lifetime and has many maintenance intervals. Besides durability, high efficiency and low manufacturing cost are important requirements for the IC concept.

Our approach to this challenge was to support the development of a free-piston engine-compressor unit at Tectonics Research, Inc., of Minneapolis. This device, known as a Braun engine (after its inventor, Anton Braun) had already been developed as an air compressor and had proven its durability in that application. Because of its simplicity, it has few components to wear out or to maintain. The question was, Can it operate satisfactorily as a heat pump compressor, which has a far greater range of operating conditions? To prevent leakage of the refrigerant

What Is a Heat Pump?

A heat pump is a conventional refrigeration system that takes up heat at a certain temperature and releases this heat at a higher temperature. It can use energy efficiently because the total energy output can exceed the energy used to drive the heat pump. Its life-cycle cost—the initial cost plus the cost of operating it over time—can be lower than that of a traditional furnace. It can be even more economical if it can cool a building by reversing its operation, taking up heat from the conditioned space and releasing it at a higher temperature to the outdoors.

Many different types of heat pumps exist, but they can generally be divided into those which are driven by electricity and those which are run by thermal energy. Electric heat pumps are commercially available today and have proven to be effective and popular in milder climates. Thermally activated heat pumps (TAHPs) are being developed and tested; none are in the U.S. market today. TAHPs fall into two generic classifications—those driven by an engine and those using chemical processes and heat to "pump" up the temperature of the heat-transfer medium. Both types are being studied at ORNL.

Both electric heat pumps and engine-driven TAHPs operate on the conventional vapor-compression refrigeration cycle, as do air conditioners and domestic refrigerator-freezers. These devices use a volatile refrigerant fluid such as Freon (Du Pont trade name). The cycle takes in heat from the environment or the cooled space by boiling the refrigerant at low pressure and temperature in a heat exchanger called the evaporator. The resulting refrigerant vapor is compressed to a high temperature and higher pressure and then releases its energy by condensing back to the liquid state in another heat exchanger called the condenser.

The compressor can be driven either by an electric motor or by a gas-fueled engine. The energy delivered is the sum of the purchased energy used to drive the compressor and the "free" energy taken in from the environment by the evaporator. Thus, in the heating mode, the beneficial output is greater than the purchased energy input, but no magic is performed because the total energy input and output balance.

The coefficient of performance (COP) is defined as the ratio of the heating or cooling energy delivered to the purchased energy input. Currently available efficient electric heat pumps operate with COPs of 2 to 3, depending upon weather conditions. Comparison of gas and electric heat pump COP is complicated because the gas system operates with primary energy on-site, whereas the electric system uses high-grade electric power that

in the heat pump, another requirement to make the IC concept work was to develop an effective reciprocating-shaft refrigerant seal.

The Braun engine-compressor-seal assembly has few major components (see Fig. 1). The piston motion is linear—back and forth in a straight line; here no rotating

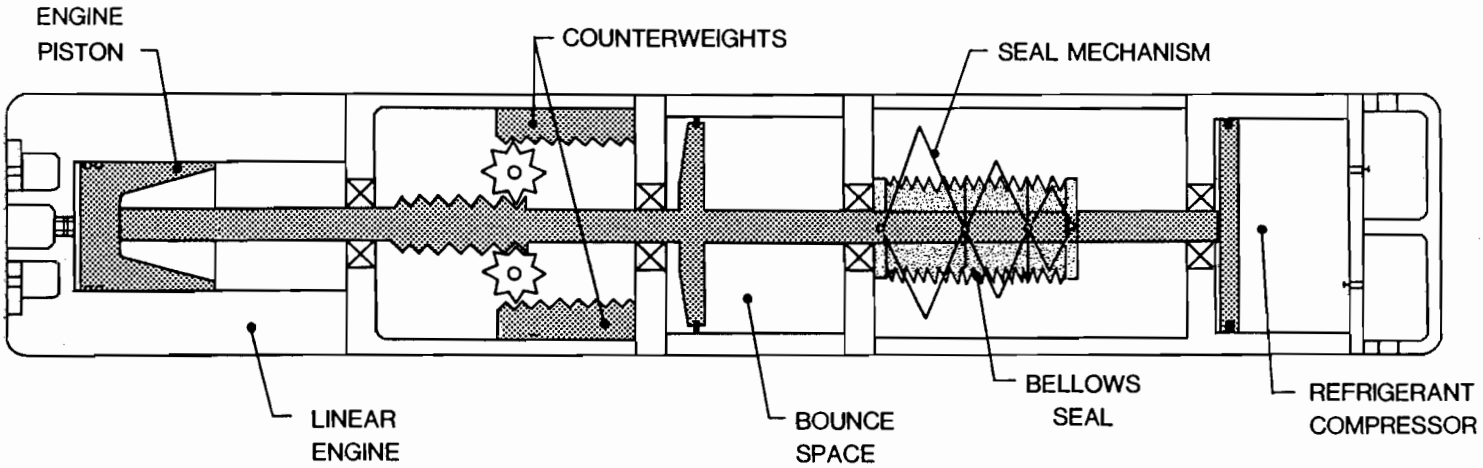

Fig. 1. This schematic shows a free-piston-engine-compressor-seal assembly for heat pump applications.

has been obtained by converting primary energy at the power plant at a representative efficiency of 30%. Also, both gas furnaces and gas heat pumps consume both fuel energy and electric power. No completely satisfactory means to compare the efficiency of devices using two kinds of power has been devised.

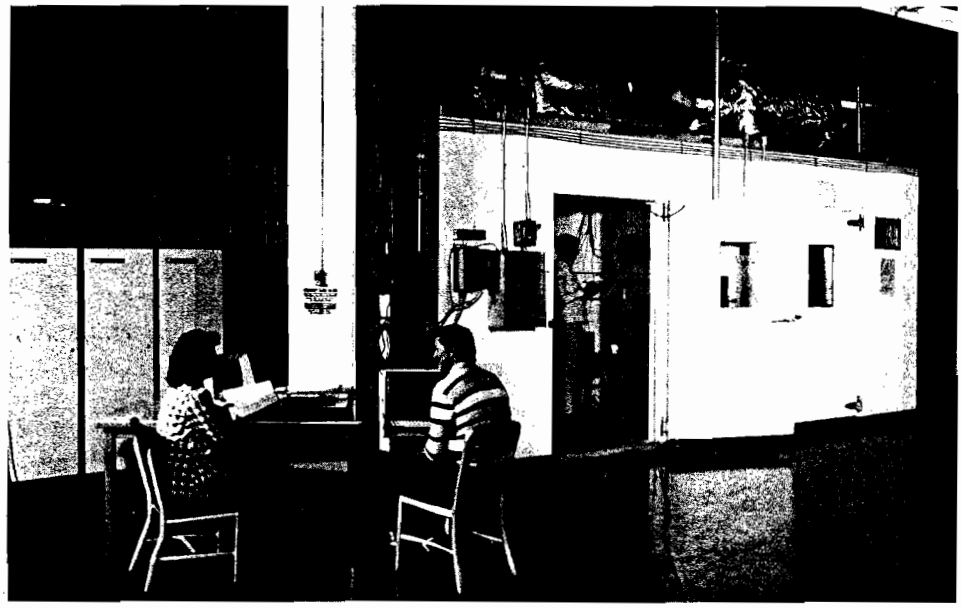

This environmental chamber has been used by ORNL for heat pump experiments. The temperature and humidity of the two chambers on the right are used to simulate indoor and outdoor air conditions. The racks on the left house the computer used to set and control test conditions, acquire data, and compute results.

Creswick, DeVault, Privon, and Chen (from left) review a printout from a data-acquisition system used for heat pump experiments. The output includes a tabulation of raw data and a complete set of computed performance parameters.

cranks or rocking connecting rods are present. The one-cylinder engine operates in a two-cycle mode (like some of the more durable lawn mowers) rather than in the conventional four-cycle automotive mode. Thus, the engine has no valves, valve-train gear, or distributor. However, like a conventional IC engine, it has a spark plug, battery, and generator. The lubricant to the engine piston is metered by drops, as in the rotary automotive engine, to ensure long piston-ring life and low exhaust emissions. Thus, no oil changes are necessary.

The engine assembly consists of two moving subassemblies, a piston and rod, and a balancing counterweight. The balance mechanism, between the engine and compressor, results in smooth vibration-free operation. This mechanism consists of a gear-driven rack that moves in an opposite direction to the pistons but at the same speed.

A bounce space and piston are in an adjacent position on the assembly and assist in operation and control of the engine. The bounce space acts as a gas spring that helps to control the motion of the piston assembly.

Once started, the engine operates at a natural resonant speed determined by the combined effects of the compressor load and the bounce-space pressures. The piston stroke length varies with load conditions. Thus, by controlling the bounce space pressures and fuel quantity, the stroke can be varied to respond to load change.

To prevent refrigerant leakage from the sliding rod that connects the engine and compressor pistons, a unique patented hermetic-seal assembly was developed at Tectonics. The assembly consists of metal bellows, a mechanism to limit bellows travel, and a means of controlling the pressure across the bellows. The seal is designed for low-cost manufacture and longevity. As of March 1987, a bellows subassembly on an accelerated life test had accumulated 2.5 billion cycles. At the nominal engine speed of 1000 cycles per minute and 4000 hours of system operation per year, this result is the equivalent of 10 years of operation.

Early tests of the engine equipped with a carburetor running on propane fuel confirmed that the system could operate over a broad range of heat pump operating conditions despite a moderate mismatch in engine-compressor size. The tests were conducted using a calorimeter, a standard device for compressor refrigerant testing. The carbureted fuel system, never viewed as a permanent feature, was discarded because of its poor efficiency.

A second engine incorporating a redesigned compressor section and a cylinder-injection natural-gas fuel system produced stable operation over the complete range of expected operating temperatures and engine efficiencies 15 to 25% higher than those of today's automotive engines.

Recently, a prototype unit was installed in a complete 15-ton packaged system and subjected to standard performance tests by a manufacturer of heating, ventilation, and air-conditioning equipment. The results verified the system's high performance. The unit produced 180,000 Btu/h (53 kW) of cooling at 95°F (35°C) ambient temperature at a COP of 1.1 to 1.2 and a heating capability of 300,000 Btu/h (88 kW) at 47°F (8°C) ambient temperature and a COP of 1.9 to 2.0. Note the COP values are in terms of primary energy; any comparison to electric system values must take into account the inefficiency of the power generation source and distribution system.

In the near future, two packaged units will be prepared for field performance evaluation in cooperation with two gas utility companies. ORNL is planning this project with Minnegasco Company of Minnesota and Northern Natural Gas Company of Nebraska.

Absorption Heat Pump Technology

An absorption heat pump (AHP) differs from a conventional electric heat pump or an engine-driven heat pump in the way the refrigerant is compressed. Instead of the usual piston or rotary compressor, the AHP absorbs the refrigerant vapor from the evaporator in a solution, pumps the solution to a higher pressure, and releases high-pressure refrigerant vapor by boiling the solution. Because the pump requires only a small amount of power, most of the energy input to an AHP is in the form of heat provided by a gas-fired burner.

Early in the program, ORNL supported the development of two experimental AHPs, one by Arkla Industries and the other by Allied Signal Corporation (the latter jointly with the Gas Research Institute). Both systems were based on a simple conventional thermodynamic cycle referred to in the industry as "single-effect." Both prototypes operated successfully and achieved their performance goals. However, the single-effect performance levels were too low to be economical—that is, the energy savings would not compensate users for the increased equipment cost for many years. Because of such a long payback, neither machine was further developed or manufactured.

In late 1981, ORNL reevaluated its absorption heat pump program goals and decided to focus on advanced absorption cycles that can produce higher efficiency while still using existing combinations of absorption fluids. Studies conducted

with the help of experts in this technology convinced us that substantially higher AHP efficiencies could be achieved through the use of advanced cycles that featured higher operating temperatures, greater solution concentration differences, and regenerative heat exchanges internal to the cycle.

Accordingly, ORNL issued a request for proposals in 1982 for the development of one or more advanced machines. Three organizations were awarded subcontracts: Carrier Corporation, a division of United Technologies Corp.; the Trane Company, a division of American Standard, Inc.; and Phillips Engineering Company.

The current work in the advanced absorption cycles program is divided into three phases: (1) the analytical evaluation of advanced cycles and selection of a preferred advanced cycle for further development (Phase I); (2) the development and testing of laboratory breadboard prototypes of the selected advanced cycles (Phase II); and (3) the development and testing of packaged proof-of-concept prototypes after successful completion of Phase II (Phase III).

The goal of the Phase I selection of a preferred advanced cycle was not necessarily to pick the highest-efficiency cycle, but to select cycles with a combination of features, such as high efficiency, low manufacturing cost, and high inherent reliability. Combining desirable features appeared to offer the most likely path to a manufactured product by the 1990s.

In Phase I analysis work, Phillips Engineering examined a variety of cycles. They evaluated each cycle's potential efficiency, heat-exchanger surface requirements, and ability to operate over a broad range of temperatures. Phillips selected the generator-absorber heat-exchange (GAX) cycle for residential uses because it has the best combination of high potential efficiency and low manufacturing cost. In the GAX cycle, the amount of external heat input required is reduced by an internal regenerative exchange of heat from the absorber to the vapor generator. Both ammonia-water and ammonia–lithium bromide–water were selected as candidate absorption fluid systems for this cycle.

The Trane Company and Carrier Corporation each evaluated advanced cycles for commercial applications. The Trane Company, which conducted a Phase I analysis similar to that of Phillips Engineering, also selected a GAX cycle but added other features and an additional internal heat exchange for higher efficiency. Economic analysis of the improved GAX cycle indicated that it will offer a payback of less than three years in commercial buildings and help gas and electric utilities balance their loads.

Carrier's study of advanced cycles resulted in selection of a dual-loop cycle based on the use of methylamine–lithium bromide–water in the lower (temperature) loop and lithium bromide–water in the upper loop. DOE has been granted six patents based on Carrier's Phase I work.

Each of these advanced cycles selected by Trane, Carrier, and Phillips offers potential for a rated heating COP in the range of 1.8 to 2.0 and cooling COP in the range of 0.8 to 1.2, significantly exceeding the original program goals.

In 1985, as part of Phase II, Phillips Engineering demonstrated their GAX-cycle laboratory breadboard (see Fig. 2) and achieved COPs of over 1.8 in heating at 47°F (8.3°C) and 0.8 in cooling at 95°F (35°C). An independent cost analysis of the Phillips Engineering prototype concept has projected a customer-installed cost equal to existing midline gas furnace–electric air-conditioner combinations or to electric heat pumps.

Trane expects to demonstrate proof of principle with a laboratory breadboard prototype model of a commercial-size unit in 1987. Carrier is scheduled to build and test two separate laboratory breadboard prototypes. The first prototype, a single-stage commercial-size AHP that can operate at below-freezing temperatures, is scheduled for operation in 1987. The second prototype using the dual-loop concept is scheduled for testing in 1988.

To support the system-development efforts in the ORNL AHP program, research is being performed on a variety of subjects including fluid properties, advanced instrumentation, heat and mass transfer, computer simulation models, and solution pump development.

In one supporting research project, ORNL's Analytical Chemistry Division developed a unique fiber-optic instrument to measure the concentration of absorption-fluid solutions such as ammonia-water. In 1986 DOE filed a patent on the device, which was developed by Horacio Perez-Blanco of the Energy Division and Leon Klatt, Debra Bostick, and J. E. Strain of the Analytical Chemistry Division. The fiber-optic instrument monitors the dynamic concentration of the refrigerant in the absorption fluid solution during operation of the heat pump by continuous measurement of the refractive index of the solution. The refractive index, which changes as fluid concentrations change, is determined by measuring light loss from an unclad segment of fiber-optic cable immersed in the fluid (see Fig. 3). Information obtained

by the ORNL fiber-optic instrument is being used to improve the design of new absorption systems and increase their operating efficiency.

Recently, in cooperation with Phillips Engineering Company, ORNL initiated experiments using a gear-type solution pump having gears fabricated of silicon carbide whisker-reinforced alumina composite ceramic, a material developed by ORNL's Metals and Ceramics Division. A simple, low-cost solution pump component that can operate in a corrosive nonlubricated environment is badly needed for residential-size absorption equipment.

Even though operating advanced-cycle-absorption prototypes have already exceeded the original program goals, work on more advanced cycles that will underpin the next generation of equipment has been continuing at ORNL. A triple-effect cycle conceived by Robert DeVault has a calculated performance potential 30 to 50% more efficient than the best existing double-effect absorption chillers.

Collectively, these developments promise to revolutionize AHP technology, and ORNL is pleased to have participated in fostering these important changes. Other U.S. developments supported by the Gas Research Institute promise substantial efficiency improvements, as do efforts under way in Europe and Japan. Although these developments could become technically and commercially successful, many challenges must be met before complete success can be claimed. Obstacles to be surmounted include solving potential corrosion problems brought about by new fluids or higher operating temperature and developing the thermal-design knowhow needed to fully exploit the efficiency potential of these advanced cycles.

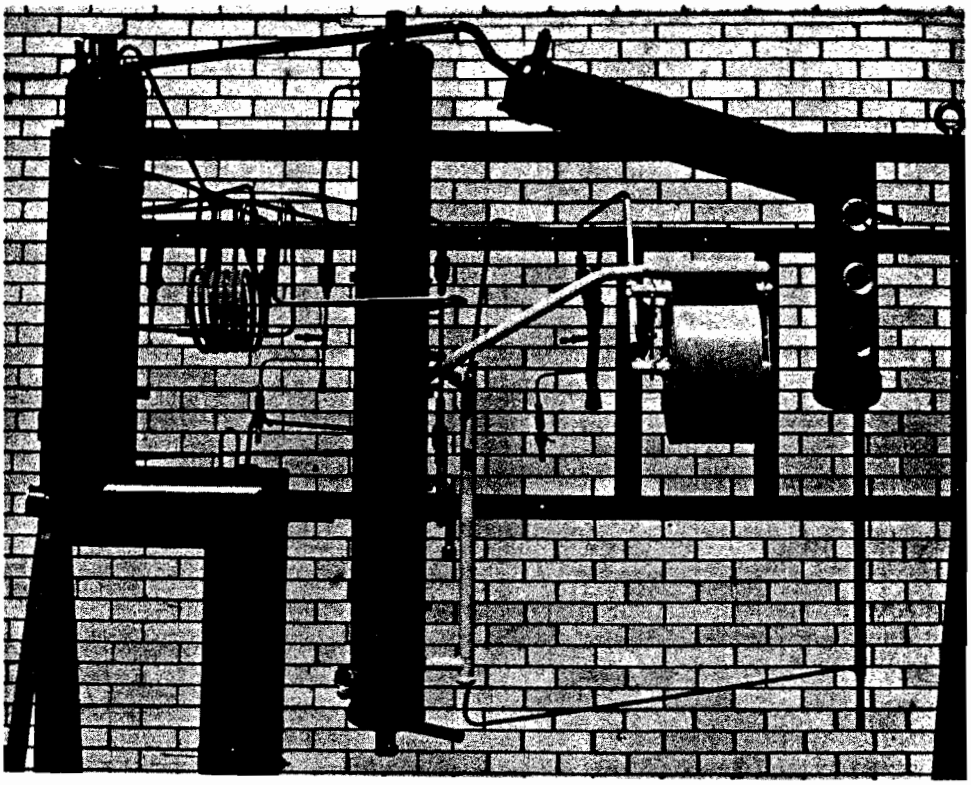

Fig. 2. This laboratory "breadboard" absorption heat pump system operates on a generator-absorber-heat-exchange (GAX) cycle.

Free-Piston Stirling-Engine-Driven Heat Pump

In principle, almost any kind of an engine can be used to drive a heat pump. In addition to the spark-ignited internal combustion engine already described, the Stirling engine is particularly well suited to this application. The basic Stirling engine concept was invented over 150 years ago; it was used commercially for small power plant applications in the 19th century before internal combustion engines were developed. In this century it has been used only experimentally for various applications, including automotive, rail, and marine propulsion and aerospace and military auxiliary power. In spite of its long history, its technology has to be considered immature in today's environment. Engine types such as gasoline, diesel, and gas turbines, which are widely used today, have been the subjects of considerably more R&D activity than the Stirling engine in the past 50 years.

The Stirling engine's principle of operation is not easily understood by most scientists and engineers. In its simplest embodiment, it consists of two pistons, one called a displacer and the other a power piston, working in a sealed system charged with a high-pressure gas such as hydrogen, helium, or air. The displacer shuttles the gas charge alternately through hot and cold heat exchangers, thus causing a cyclic pressure variation. The motion of the power piston is phased so that it moves outward when the gas pressure is high and inward when the gas pressure is low, resulting in work output. Heat is provided to the "hot" heat exchanger by an external

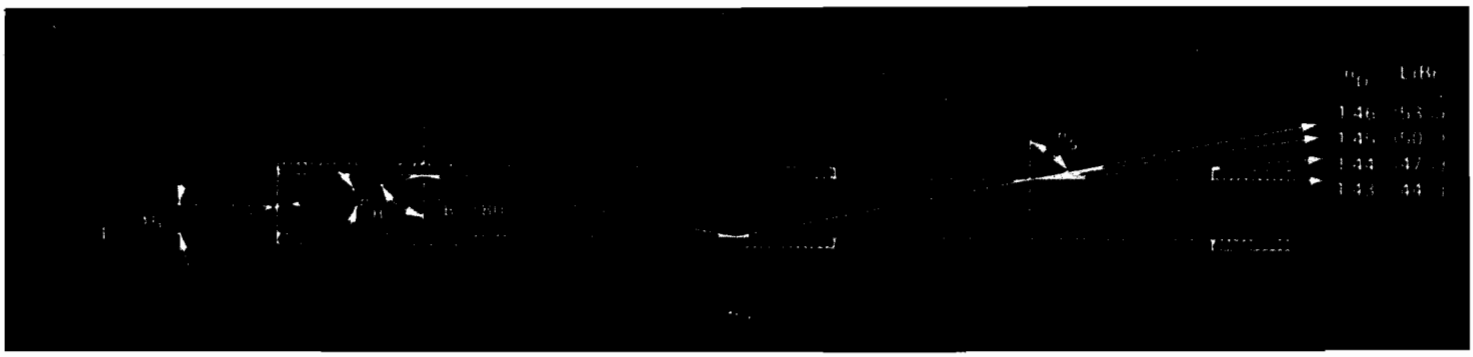

Fig. 3. This diagram shows the principle of operation of a fiber-optic instrument for measuring fluid concentration in an absorption heat pump. The ORNL instrument uses changes in light transmission to measure changes in fluid concentration. The index of refraction of the fluid influences the angle and therefore the amount of light leaking from the unclad section of the fiber.

combustor; a coolant is used for the "cold" heat exchanger. The engine has no valves and requires an ignition system only for starting.

Several types of Stirling engines exist, but the most common ones are kinematic and free-piston types (see Fig. 4). A kinematic Stirling engine uses a mechanical linkage to establish the motion of the displacer and power piston, maintaining a fixed phase angle between the two. The displacer and power piston in a free-piston engine, on the other hand, are not connected by a mechanical linkage. The motion of the displacer and power piston results from their masses and the pressure variations of the working gas. The output power is in the form of linear motion, which can be used directly to drive a vapor compressor. The engine and the compressor can be hermetically sealed to form a single Stirling-engine heat pump unit.

Although a Stirling engine heat pump (SEHP) might take many forms, the basic concept offers some important potential advantages in addition to high thermal efficiency. Perhaps most important is its exceptionally quiet and vibration-free operation. The continuous burning combustor can be designed to emit very clean exhaust. Ideally, no oil changes or tune-ups are required.

The free-piston configuration has these advantages over the kinematic type: fewer moving parts and bearing surfaces to wear out and the opportunity to hermetically seal both the engine and refrigerant sections of the device. The liability of the free-piston type is the requirement for close attention to "tuning" in the design of the system.

ORNL's involvement with the SEHP began early in our program when we assumed responsibility for a subcontract with the General Electric (GE) Company, which was already in progress with joint sponsorship by the Gas Research Institute. The GE configuration involved an inertial coupling between the engine and refrigerant compressor. Two generations of prototypes were developed; both ran convincingly but fell short of efficiency and capacity goals. After the second configuration, we concluded that it was uncertain whether the complicated dynamics of the inertia-coupled system could be dealt with in the time given. So we switched to an alternative configuration.

In cooperation with the Gas Research Institute, DOE and ORNL sponsored a free-piston, Stirling engine heat pump (FPSEHP) program at Mechanical Technology, Inc. (MTI), beginning in 1980. The system consists of an FPSE coupled to a resonant piston refrigerant compressor through a hydraulic transmission. Located above the engine diaphragm, the FPSE assembly consists of a recuperated natural gas combustor, a monolithic-finned heater head, a motor-driven displacer, and heat-exchanger components. The hydraulic transmission and compressor are located below the engine diaphragm.

The motor-driven displacer enables the displacer stroke to be controlled electrically, providing a convenient means for start-up and the primary control to match the engine output to the heat pump load. Separation between the engine working fluid and refrigerant (R-22) is achieved by using the flexible metal diaphragm between the FPSE and hydraulic transmission. Engine power is transferred to the compressor through the volumetric displacements of the diaphragms and corresponding displacement of the oil in the hydraulic transmission. The motion of the diaphragm is produced by the pressure wave developed in the engine.

The FPSEHP module has gone through two hardware design iterations and is in the proof-of-concept stage. It has met the proof-of-concept performance targets; for a module having a

cooling capacity of three tons (10.5 kW) at the outside air temperature of 95°F (35°C), it has achieved a cooling COP = 0.9 and a heating COP = 1.6 at standard test conditions in laboratory tests. To further validate the laboratory results, the heat pump module is being evaluated at the product test laboratory of Lennox Industries, a major heat pump manufacturer.

We believe the success of this unit has demonstrated that this tuned system can operate with satisfactory dynamics over a wide range of operating conditions. Also, durability tests have produced encouraging results; after more than 1100 hours of operation, a durability-test engine was disassembled, and its mechanical components showed insignificant wear. The engine was reassembled and is now undergoing an additional 10,000-hour life test.

Although the current FPSEHP laboratory module has met the performance goals, it still can be improved. Like many new technology developments, it is a rather complex piece of hardware. Design refinements and hardware iterations are needed to reduce a laboratory prototype into practical equipment.

The next phase of FPSEHP development, now under way, focuses on converting the laboratory module into an engineering prototype. MTI is refining the engineering design of an advanced version of the FPSEHP module to simplify the mechanical arrangement of the module. Simplification should reduce the manufacturing cost and increase the reliability of the heat pump module without reducing the good performance achieved by the earlier version. Once the design refinement is completed, a new generation of hardware will be built and thoroughly tested both in controlled laboratory and real-world environments.

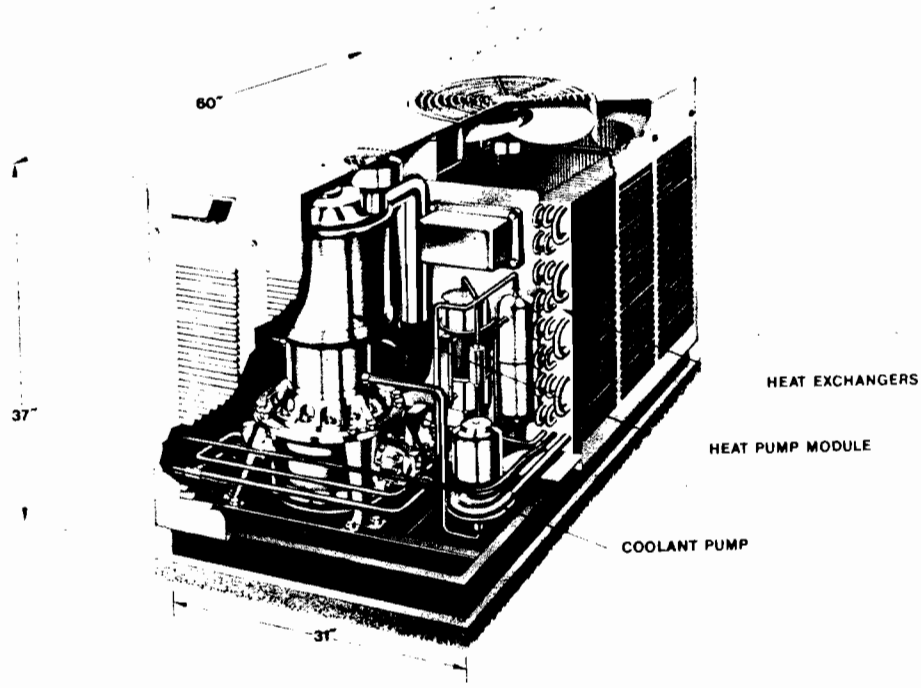

Fig. 4. Artist's rendition of a free-piston, Stirling engine heat pump.

The Promise

We think the prospects for eventual commercialization of gas-fired heat pumps are far brighter than they were in 1978 when we began our program. We have demonstrated in laboratory tests that our thermal performance goals can be met or exceeded with three different gas-fired heat pump concepts. In doing so, we have developed concepts and supporting technology to hurdle major technical obstacles and to make major advances in the technology. We cannot claim sole credit for these advances because we have had the advantage of significant cooperation from other organizations, especially the Gas Research Institute, and of general advances in related technologies external to heat pump development programs. However, we think we have made a significant difference.

The linear IC engine compressor development is now entering a transition phase in which ORNL will continue to fund work on improvement of seals, fuel systems, and controls while the developer negotiates an agreement with an organization interested in commercializing the device. Although the AHP developments are still in the early laboratory phase, product development could ensue quickly once thermal design and materials (corrosion) problems are solved. Because the SEHP concept needs to be simplified, it will probably take a little longer to reach the commercial stage.

The IC engine system is well suited to small- and medium-size commercial application. The AHP is potentially suited to both residential and commercial applications of all sizes and to industrial applications as well. The SEHP looks best in residential and light commercial applications. Quite possibly, one or more of these developments could be commercialized as early as the mid-1990s. ornl