ON THE VERTICAL INTEGRATION OF THERMALLY ACTIVATED HEAT PUMPS

F. C. Chen
Energy Division
Oak Ridge National Laboratory
Oak Ridge, Tennessee

ABSTRACT

Many thermally activated heat pump systems are being developed along technology lines, such as engine-driven and absorption heat pumps. Their thermal performances are temperature dependent. Based on the temperature-dependent behavior of heat pump cycle performance and the energy cascading idea, the concept of vertically integrating various thermally activated heat pump technologies to maximize resources utilization is explored. Based on a preliminary analysis, it is found that integrating a desiccant dehumidification subsystem to an engine-driven heat pump could improve its cooling performance by 36% and integrating an ejector to it could improve its cooling performance by 20%. The added advantage of an ejector-coupled engine-driven heat pump is its system simplicity, which should result in equipment cost savings.

ORNL-DWG 85-16597

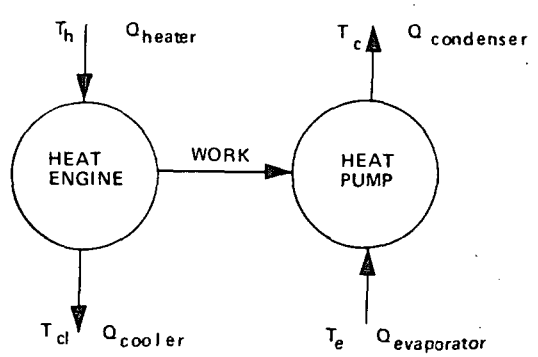

Fig. 1. Thermally activated heat pump cycle.

INTRODUCTION

A heat pump in its simple form pumps heat from a low-temperature source to a higher temperature one by means of mechanical energy. A heat pump can also be driven directly by thermal energy derived from primary fuel sources. Such a device may be called a thermally activated heat pump (TAHP). The thermodynamic principle of this type of equipment is the combination of a heat engine cycle and a heat pump cycle as shown in Fig. 1. The heat engine cycle of a thermally activated heat pump operates between a high-temperature source that is provided by the combustion of primary fuel and a heat rejection sink temperature provided by engine cooling. Power generated by the heat engine cycle provides the energy required to run the closely coupled heat pump cycle. In a cooling mode, the heat is pumped from a conditioned space and rejected to the ambient at a higher temperature. In a heating mode, the heat is extracted from the ambient and discharged to the conditioned space. In both modes of operation, the heat engine cycle provides the energy required to achieve the heat pumping action. Examples of thermally activated heat pumps include engine-driven heat pumps, absorption cycle, and ejector heat pumps.

In an electric motor-driven heat pump, heat is transported between two thermal reservoirs at different temperatures. In a thermally activated heat pump, however, heat is moved among four thermal reservoirs. Each of them could be at a different temperature. As compared to a simple heat pump cycle, a thermally activated one has two additional thermal reservoirs. They can be viewed as two degrees-of-freedom in the temperature scale, which can be utilized in the optimization of thermal resources for space conditioning.

The theoretical limit on efficiency of any thermodynamic cycle is a function of the heat source and sink temperatures only. In reality, the efficiency and performance of a thermodynamic cycle machine depends on not only the temperatures but also the particular cycle principle and working fluid it uses. Since the high temperature source of a thermally activated heat pump is provided by primary fuel combustion, the heat source temperature is not particularly a limiting factor to the heat pump performance. A proper choice of thermodynamic cycles and working fluids and combining them in a "vertical" cascading way on the temperature scale could lead to substantial improvements in the performance of TAHPs.

CURRENT RESEARCH

At present, most of the TAHPs are being developed along cycle technology lines. Two types of TAHP cycle technologies, the

absorption cycle and the engine-driven heat pump, are being pursued by several organizations.

Space conditioning equipment, e.g., chillers based on absorption cycle principle, were commercially available long before the advent of electric motor-driven vapor compression cooling equipment. Absorption cycle heat pumps are known to be efficient for utilizing relatively low temperature heat sources. In order to take advantage of the high heater temperature available in a TAHP, recent studies have been focused on an additional effect and/or stage to be added on top of the single-effect absorption cycle to form double-effect, double-stage and/or multi-working fluid cycle heat pumps. These advanced absorption heat pumps have a targeted coefficient of performance (COP) of cooling of 1.50 (ref. 1), which is more than double the performance of a single-effect system. The increase in thermal performance is at the expense of greater configuration complexity and unit cost. The projected unit cost of advanced absorption chillers is $500–$900 per cooling ton as compared with $330 for a single-effect counterpart (1). The heater temperature of these advanced absorption concepts is limited to approximately 250°C (450°F) due to the chemical behavior of available absorption working fluids.

Engine-driven heat pumps can usually take advantage of the available high heater temperature in TAHPs. Concepts being pursued include internal combustion (IC) and Stirling engine-driven vapor compression heat pumps. The heater (combustor) temperatures in these engines are usually above 550°C (1000°F). For a 30% efficient IC engine heat pump, the projected COP for cooling as estimated by the Gas Research Institute (GRI) (1) is 1.7 and the projected unit cost is $330 per cooling ton.

The double-effect and double-stage absorption heat pump is a form of vertical integration of TAHP which intends to utilize the thermal resources more effectively.

In engine-driven heat pumps, the vertical integration can be done at the engine cooler side together with the engine exhaust. Since the cooler temperature of an IC engine can be as high as 93°C (200°F), it can be utilized to run a heat pump bottoming cycle. One such possibility, which has appeared in the literature, is an IC engine-driven chiller with an absorption bottoming cycle. According to GRI estimates (1), a 150-ton (cooling) system could have a COP of 2.1 and a cost of $390 per cooling ton. However, such a system will involve several different fluids, including glycol-water for engine cooling, freon for the vapor compressor chiller, and water and lithium bromide for the absorption bottoming cycle. While such an integrated system improves thermal performance, it is more complicated and tends to be less reliable.

There are other possible vertically integrated TAHP options. Two of them are explored here. One is an engine-driven chiller with desiccant cooling and the other an engine-driven primary system combined with an ejector heat pump. These integrated concepts could be more cost-effective, because they are less complicated and more reliable, even though they may be less energy efficient than the integration of an absorption bottoming cycle.

ENGINE-DRIVEN HEAT PUMP WITH DESICCANT COOLING SYSTEM

Engine waste heat from an engine-driven heat pump (EDHP) can be used to heat the conditioned space during the heating season as shown in Fig. 2. This direct waste heat utilization is not applicable in the cooling season. One way to directly utilize waste-heat for increasing cooling season performance is to use a desiccant-based system as a bottoming cycle. In this hybrid system, the engine waste heat is used to reactivate the desiccant. A schematic of such a system is shown in Fig. 3.

The EDHP/desiccant system is especially suitable for cooling in a relatively high humidity environment. A new hybrid system product that combines a gas-regenerated desiccant dehumidifier

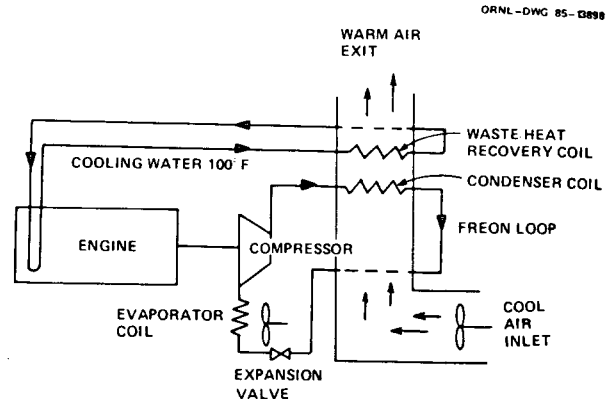

Fig. 2. Engine-driven heat pump with waste heat utilization in heating season.

with electric vapor compression sensible cooling has been introduced for supermarket space conditioning (2). A well-insulated house in the future will reduce both the heat loss and the moisture migration. In such a house, the latent-to-total cooling load can reach a value of 0.3 in summer season in many parts of the country (3). Desiccant dehumidification could be applicable to that residential application as well.

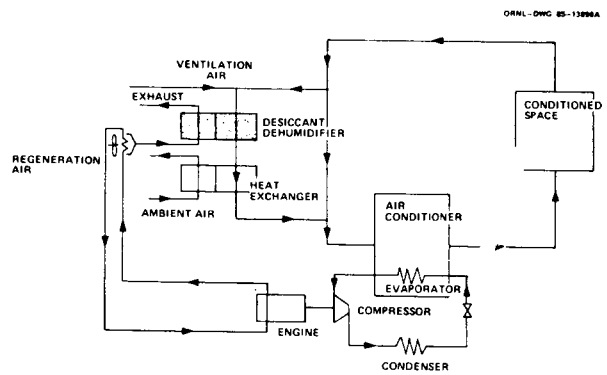

Fig. 3. Schematic of engine-driven heat pump with desiccant dehumidification.

From a sample calculation, it has been shown that an equivalent cooling COP of 1.43 can be achieved for an engine-driven heat pump with combined desiccant dehumidification. The cooling COP of a comparable system without desiccant dehumidification would be 1.05. A 36% improvement in cooling performance is due to the desiccant dehumidification. Assumptions used in the calculation include latent-to-total load ratio = 0.30, engine thermal efficiency = 0.30, and vapor-compression heat pump mechanical COP = 3.5.

The hybrid engine/desiccant system also offers other possible advantages including the improvement of the heat pump mechanical COP by 10% (due to the effect of an 8.3°C (15°F) higher evaporator temperature), and a size reduction of air ductwork (4).

In the sample calculation, the engine has sufficient waste heat to regenerate the desiccant. It may require additional heat in other operating conditions. An auxiliary gas burner may be needed to meet the regenerator heat demand. A more detailed analysis to study the performance and cost-effectiveness of a hybrid EDHP with a desiccant cooling system at varying operating conditions experienced in an entire cooling season is being pursued. Moreover, the effects of variations in comfort criteria, climate, and system

component characteristics will be evaluated. Optimal system configurations at various localities and climate zones may be derived.

EJECTOR-COUPLED ENGINE-DRIVEN HEAT PUMP SYSTEM

The hybrid engine/desiccant system will not improve the heating performance in the heating season other than the possible direct waste heat heating shown in Fig. 2. Engine waste heat can be used to run an ejector heat pump as a bottoming cycle as shown in Fig. 4. An ejector-coupled engine-driven heat pump could improve not only the cooling season but also the heating season performances.

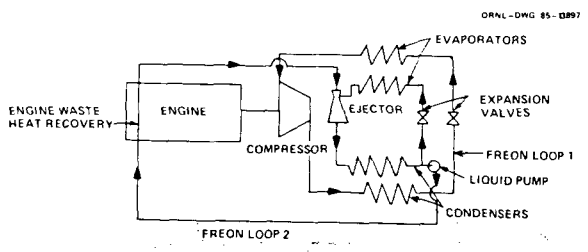

Fig. 4. Ejector-coupled engine-driven heat pump system (dual working fluid case).

In space conditioning applications, freon is used as the working fluid for the ejector heat pumps. If the refrigerants used in the ejector cycle and the vapor compression cycle are dissimilar, then a separate ejector heat pump loop is needed, as shown in Fig. 4. On the other hand, the working fluids in both loops can be the same, eliminating one set of evaporator, expansion valve, and condenser. The only additional hardware required would be a freon waste heat boiler, an ejector, and a liquid feed pump. This results in a simplified system, and a schematic of it is shown in Fig. 5. In this case, the waste-heat activated ejector is in parallel with the engine-driven vapor compressor to provide the heat pumping action. Using R-11 as the working fluid (5), engine thermal efficiency = 0.30, $T_{wasteheat}$ = 104°C (220°F), $T_{condenser}$ = 40°C (104°F), $T_{evaporator}$ = 4.4°C (40°F), and an ejector entrainment ratio = 0.70, a 20% increase in system cooling performance has been calculated.

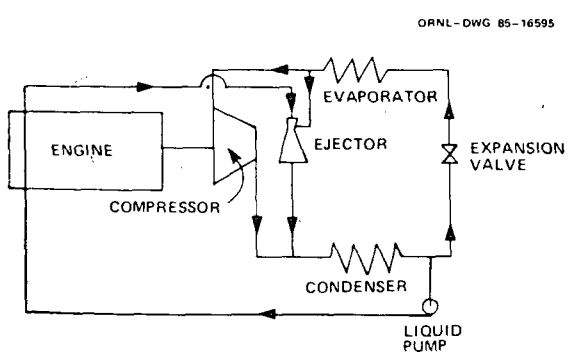

Fig. 5. Ejector-coupled EDHP system—single working fluid, parallel version.

Besides the parallel version shown in the previous figure, an ejector-coupled engine-driven heat pump system using a single working fluid can also be configured into a series version as shown in Fig. 6. The total pressure head required to achieve the heat pumping action is now the summation of the vapor compressor pressure head rise and the ejector pressure head rise. The compression ratios of the compressor and the ejector in this configuration are less than that of the parallel version while the mass flow through them will be increased. The reduction in compression ratios should improve the thermal efficiency of the compressor and the ejector and, thus, the system performance. The performance calculation of the compressor-ejector in series configuration requires numerical iteration, which is best done by computer simulation.

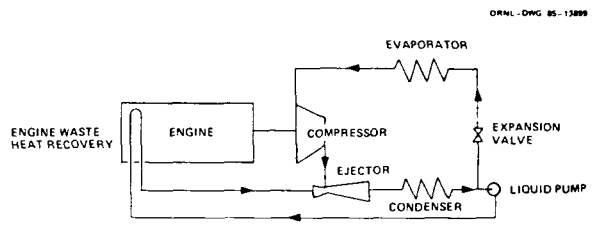

Fig. 6. Ejector-coupled EDHP system—single working, series version.

Computer modeling of ejector-coupled engine-driven heat pump concepts is being carried out. It is intended to assess the performance potential of these concepts as viable options for utilizing waste heat from engine-driven heat pumps for space conditioning applications.

CONCLUSIONS

Thermally activated heat pumps which use primary fuels to provide their heat source could effectively utilize the thermal resource by combining several different heat pump cycle technologies in a vertically cascading way for space conditioning. The use of the absorption heat pump as bottoming cycle seems to be more energy efficient. However, the use of desiccant and ejector as bottoming cycle options may be equally cost-effective. The on-going studies in these areas could provide needed data to better define the feasibility, performance potential, and research needs of these hybrid system concepts.

ACKNOWLEDGEMENTS

The author would like to thank R. W. Murphy, G. T. Privon, and J. W. Michel for their helpful comments and suggestions and P. J. Lewis for preparing the manuscript.

This work is a part of the Building Equipment Research Program performed at the Oak Ridge National Laboratory for the Office of Buildings and Community Systems, U.S. Department of Energy under contract DE-AC05-84OR21400 with Martin Marietta Energy Systems, Inc.

REFERENCES

1. Gas Research Institute, "Space Conditioning Program. Strategy and Approach," Chicago, 1985.
2. Gas Research Institute, *GRID*, Vol. 8, No. 3, Chicago, Fall 1985.
3. Fairey, P., et al., *Latent and Sensible Load Distributions in Energy Efficient and Passively Cooled Residence*, Draft Final Report, FSEC-CR-125-85, August 1985.
4. Cohen, B. M., et al., *Field Development of a Desiccant-Based Space-Conditioning System for Supermarket Applications, Final Report*, TE 4308-38-84, GRI 84/0111, June 1984.
5. Chen, F. C., and C. T. Hsu, "Performance of Ejector Heat Pumps," *Int. J. Energy Res.* (to be published).