IEA-A11-5

COMPARATIVE ASSESSMENT OF FREE PISTON AND KINEMATIC STIRLING ENGINE TECHNOLOGIES

Prepared for
U.S. Department of Energy
Operating Agent for the
International Energy Agency (IEA) Annex XI:
STIRLING ENGINE TECHNOLOGY FOR
APPLICATIONS IN BUILDINGS

Prepared by

Arthur D. Little, Inc.
Cambridge, MA 02140-2390

November 1988

under
Subcontract 86X-00205C
for
OAK RIDGE NATIONAL LABORATORY
Oak Ridge, Tennessee 37831
operated by
MARTIN MARIETTA ENERGY SYSTEMS, INC.
for the
U.S. DEPARTMENT OF ENERGY
under Contract DE-AC05-840R21400

IEA-A11-5

COMPARATIVE ASSESSMENT OF FREE PISTON AND KINEMATIC STIRLING ENGINE TECHNOLOGIES

Prepared for
U.S. Department of Energy
Operating Agent for the
International Energy Agency (IEA) Annex XI:

STIRLING ENGINE TECHNOLOGY FOR
APPLICATIONS IN BUILDINGS

Prepared by

Arthur D. Little, Inc.
Cambridge, MA 02140-2390

November 1988

under
Subcontract 86X-00205C

for

OAK RIDGE NATIONAL LABORATORY
Oak Ridge, Tennessee 37831

operated by

MARTIN MARIETTA ENERGY SYSTEMS, INC.

for the

U.S. DEPARTMENT OF ENERGY
Under Contract DE-AC05-840R21400

ADL Reference No. 55409

TABLE OF CONTENTS

	Page
1.0 INTRODUCTION	
1.1 Background	1
1.2 Study Objectives	1
1.3 Application Requirements	2
1.4 Approach	2
2.0 SYSTEM DESCRIPTION	
2.1 Background	6
2.2 Engine Configurations	6
2.3 Comparison of Key Design Features	9
3.0 ISSUES OVERVIEW	
3.1 Advantages of FPSE	12
3.2 Advantages of KSE	14
4.0 COMPARISON OF CURRENT SYSTEMS	
4.1 Efficiency	16
4.2 Life and Durability	18
4.3 System Size and Weight	23
4.4 Noise and Vibration	25
4.5 System Costs	25
5.0 UNLUBRICATED BEARINGS AND SEALS - IMPACT ON DESIGN CONFIGURATION	28
6.0 CONCLUSIONS AND RECOMMENDATIONS	
6.1 Factors Influencing Technology Selection	32
6.2 R&D Required to Resolve Issues	33
APPENDIX 1.0	
IMPACT OF SYSTEM DESIGN ON WEAR OF UNLUBRICATED SEALS	
APPENDIX 2.0	
IEA REFERENCES	

LIST OF FIGURES

Figure No.		Page No.
1.1	Performance Requirements	3
1.2	Participants - Stirling Engine Systems for Building Applications	5
2.1	FPSE System Schematic	7
2.2	KSE System Schematic	8
2.3	Options for Load Coupling to a FPSE	10
4.1	Technical Performance Comparison	17
4.2	Mechanical Loss Mechanism for a KSE	19
4.3	Comparison of Mechanical Loss Mechanisms for a KSE	20
4.4	Mechanical Loss Mechanisms - Comparison Between FPSE and KSE Options	21
4.5	Size Reduction of Mitsubishi 3 kW KSE	24
4.6	Stirling Engine System Cost Breakdown	26
5.1	Wear Rate and Power Dissipation for Several Stirling Engine Configurations.	29

1.0 INTRODUCTION

1.1 Background:

The International Energy Agency (IEA) has as its charter to foster international cooperation in the development of advanced energy technologies. This study is one of the outputs of Annex XI which deals with "Stirling Engine Technology for Applications in Buildings". The sponsors of the Annex are the United States, Japan, and Sweden. These countries have the major programs worldwide in Stirling engine technology, in general, and its application to heat pumps and cogeneration which are the specific focus of the Annex.

As stated in the Implementing Agreement the objectives of this Annex are "to gain through international cooperation a more complete strategic assessment of the technology of Stirling engine-driven heat pumps than can be obtained through present individual programs. A secondary objective is to identify specific topics for further cooperative research efforts."

One of the most important judgements made by developers of Stirling engine technology is whether to utilize Kinematic or Free Piston engine technology. Both technologies are being actively pursued in the United States - in some cases by the same firm for different applications. By contrast, most of the developments in Japan and Europe utilize KSE. Reasons for this include the larger experience base in KSE technology and the more complex thermodynamic/dynamic interactions in FPSE technology making development programs more risky. However, once successfully developed FPSE have several potential advantages over KSE technology including longer life and lower cost resulting from simpler construction, and avoidance of shaft seals.

Due to the potential importance of both FPSE and KSE technology in building applications, and the task of widespread understanding of basic technical differences between the two technologies, one of the agreed upon outputs of the Annex XI activity was the preparation of this "Comparative Assessment of Free Piston and Kinematic Stirling Engine Technologies".

1.2 Study Objectives:

This paper provides a comparative assessment of KSE and FPSE technologies based on recent experience which can be used as one of the inputs into the technology selection process. Specific objectives include to:

- Identify key differences between the technologies which can impact on life, efficiency, cost, and commercialization potential.

- Review and compare recent experience with both technologies in order to assess the extent to which performance potentials have been verified.

- Assess the impact of application requirements(life, efficiency, capacity, power output form, etc.) on technology selection.

- Define key technical/cost issues associated with both technologies requiring resolution in order to improve the technology selection process.

1.3 Application Requirements

The primary applications in buildings for Stirling engines will be as heat pump, air conditioning, and cogeneration system drives. As indicated by Figure 1.1, the technical and cost requirements placed on this class of application are very stringent - particularly as regards simultaneously achieving long, reliable, life and high efficiency levels. For example, a life of 25,000+ hours corresponds only to about 6 years of heat pump service and even less in many cogeneration applications. By contrast, automotive engines need last only about 3,500 hours. For this reason, much of the discussion centers on the issue of life/reliability since this critical performance parameter is of particular importance in the class of applications under consideration and one where design goals have not been verified by either engine configuration.

1.4 Approach

The major Stirling engine development programs worldwide for the applications of primary interest are indicated on Figure 1.2. As indicated;

- Most of the FPSE activity is in the United States as the result of programs sponsored by the DOE, GRI, and NASA. The companies involved are Mechanical Technologies Inc. and Sunpower with earlier work by General Electric terminated in 1984.

- The most advanced Stirling engine development for the applications of interest is that by Stirling Power Systems of Ann Arbor, MI using technology developed originally by United Stirling of Sweden. This KSE development has demonstrated over 19000 hours on a single machine in a 12kW cogeneration application and extensive life/reliability testing is currently underway in a commercial heat pump and cogeneration application.

- The Japanese are currently active in developing KSE technology for light commercial and residential applications as part of the MITI sponsored Moonlight Project. These programs involve some of the premier companies in Japan including Toshiba, Aisen Seiki, Mitsubishi Electric Co., and Tokyo Sanyo. These system level development programs, supported by more basic component level R&D programs at national laboratories, have made a major contribution to assessing the potential of KSE for building applications.

- Building applications are primarily for heat pumps and cogeneration.

- These applications impose severe technical and cost requirements on any engine drive to result in economical operation.

EFFICIENCY	-	30%
RELIABILITY	-	1 service call per year (residential)
LIFE*	-	25,000+ hours* (4 - 10 years depending on duty cycle)
COST	-	$300-$400 per kW (max.)

* Allows for replacement of parts during normal maintenance.

Figure 1.1 Performance Requirements

Additionally, Kawasaki Heavy Industries has undertaken the development of FPSE using a Duplex Stirling engine-cooling cycle configuration for heat pump and air conditioning applications. This work, based on technology developed by Sunpower Inc., is the only ongoing activity investigating this very important option (i.e. Stirling heat pump cycles) improving the potential for FPSE technology.

This report drew heavily on the information resulting from the activities referred to in Figure 1.2 as discussed by contractor reports, technical papers, and product literature. Of particular value was the information transfer resulting from the IEA Annex XI Workshops and associated site visits in Japan and Sweden. These forums allowed for in depth discussions of key technical and economic issues by major participants in Stirling engine technology development based on recent experience. A list of the reports resulting from this IEA activity is presented in Appendix 2.

COMPANY	TYPE	COUNTRY	CAPACITY (kW)	MEAN PRESSURE (PSI)	SPEED (RPM)	WEIGHT (kg)	STATUS/OBSERVATIONS
MTI	FPSE	U.S.	3	900	3600	85[1]	- Advanced Development
SUNPOWER	FPSE	U.S.	1-5	400	1800-7200	78	- Weight for 3 kW Army Engine Generator
SPS	KSE	U.S./ Sweden	7-12	1300[2]	1800	100	- Commercial Prototypes in Field Testing for Cogen
STM	KSE	U.S.	25	1550	1800	85[3]	- Experimental - Variable Swash Plate Design
Toshiba	KSE	Japan	3	850	1400	75	- Developmental
Mitsubishi	KSE	Japan	3	850	1200	130	- Developmental
Tokyo Sanyo	KSE	Japan	30	2100	1600	420	- Developmental
Aisen Seiki	KSE	Japan	30	1150	1000	220	- Developmental, Swash Plate
Kawasaki	FPSE	Japan	3	360	3600	-	- Based on Duplex Stirling cycle Configuration - Experimental
Sanden	KSE	Japan	2.5		2500	50	- Developmental, Swash Plate

1. Weight based on design studies for second generation equipment.
2. Under derated conditions.
3. Engine only - does not include heat pipe/combustion system.

Figure 1.2 Participants - Stirling Engine Systems for Building Applications

2.0 SYSTEM DESCRIPTION

2.1 Background:

A Stirling engine is a closed cycle regenerative system in which expansion takes place with a hot gas and compression with a cold gas such that there is net work produced. With the proper use of regenerators and piston motion phasing the resultant cycle can ideally have Carnot efficiency which has been a major incentive for the development of this technology over the last 50 years. The motion of the pistons to result in the working gas being in the proper location can be implemented with two basic system options:

- A Kinematic system whereby the piston motion is controlled by linkages similarly as with conventional internal combustion engines.
- A Free Piston system whereby the motion of the pistons is controlled by the spring mass dynamics dependent on piston masses, gas pressures, and geometry details.

The following sections briefly describe the current status of these two approaches to Stirling engine design and highlight the practical design issues associated with both approaches.

2.2 Engine Configurations:

Figure 2.1 shows one embodiment of a FPSE and Figure 2.2 of a KSE indicating critical system components. Subsystems common to both configurations include:

- Cylindrical pressure vessels containing a high pressure gas
- Displacer and power pistons
- Seals and bearings to prevent rubbing of the pistons on the cylinder walls and gas leakage by the pistons
- A high temperature combustion system with associated controls for emission reduction and power modulation.
- Heater head assembly to transfer energy at high temperatures into the working gas
- An air preheater assembly for improving the efficiency of the combustion/heat transfer system.
- Cooler assembly to extract heat from the gas during the compression process
- Regenerators to store heat from and transfer heat to the working gas during shuttle process between the hot and cold volumes of the engine.

The subsystems which most differentiate the two configurations is the means for extracting power from the thermodynamic cycle. This is shown as via a shaft seal to a kinematic crank drive for the KSE and as a hydraulic transmission for the FPSE. As indicated subsequently, other options are available.

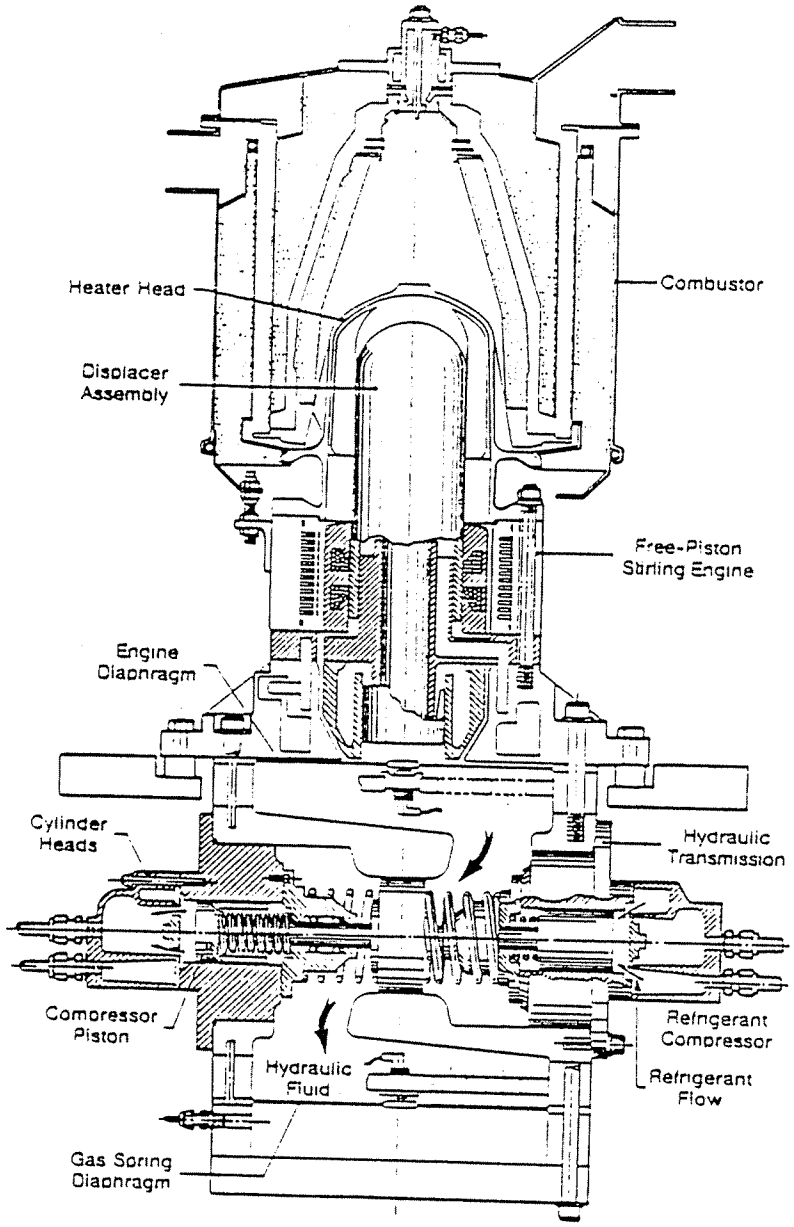

Figure 2.1 FPSE System Schematic (shown as the MTI hydraulically coupled system)

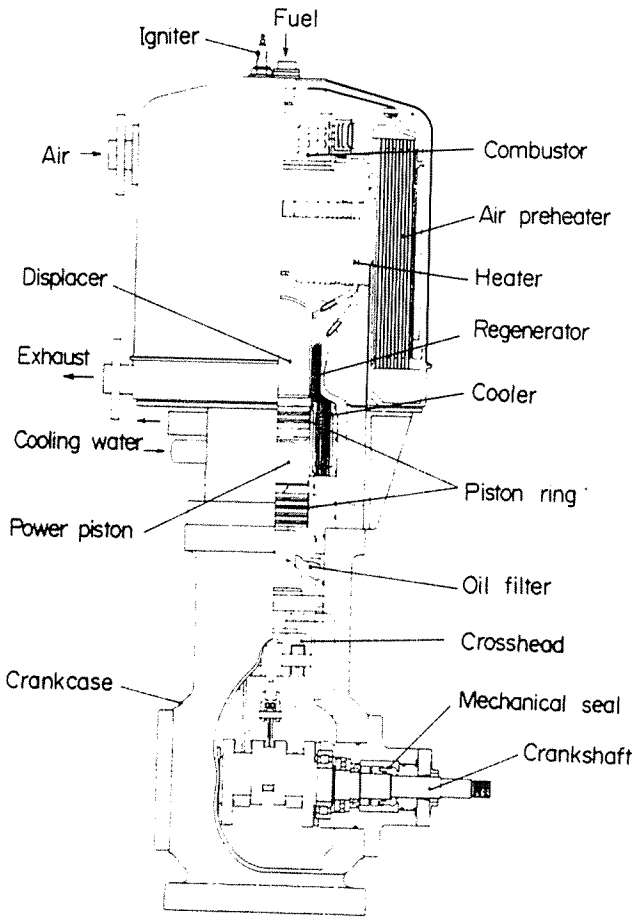

Figure 2.2 KSE System Schematic

2.3 Comparison of Key Design Features

The major subsystems contributing to system size, weight, and cost are the heat exchangers associated with the combustion/air preheater subsystem, heater head assembly, regenerators, and coolers. For example, these subsystems are estimated to comprise about 70 - 80% of the cost of a production engine. There is little, if any, difference in the design of these major subsystems determined by the choice of FPSE or KSE technology options. The major differences in the engine configuration are associated with bearings/seals, control options, and modes of coupling to the load. As discussed subsequently these issues have major impacts on the life and reliability potential of the engines and, therefore, their practical application to a wide range of heat pump and cogeneration applications. Briefly, the major differences are:

- Shaft Seal (in KSE)

Most kinematic engines require a shaft seal between the crankcase and the high pressure working gas, to both prevent working fluid leakage from the engine and leakage of oil from the engine crankcase into the engine working space. The elimination of the shaft seal with its associated life, reliability, efficiency, and cost implications was and remains the primary rationale for development of the FPSE alternative.

- Load Coupling (in FPSE)

One advantage of the KSE is that the output is available in the form of a rotating shaft which can be readily connected to conventional electro-mechanical equipment. In the FPSE there is no rotating shaft and other means must be found to extract power from the linear motion of the pistons preferably without breaking the hermetic seals. Options used to date considered for coupling the output of a FPSE to a useful load include linear alternators, diaphragms coupled to hydraulic drives, duplex Stirling configurations and inertial compressors (Figure 2.3).

Of these, the hydraulically coupled arrangement of Figure 2.1 has received the most emphasis due to its potential to couple directly to a vapor compression heat pump cycle. This and the other options tested to date have had significant cost, efficiency, and reliability impacts which are comparable to those of the shaft seal/kinematic linkages of KSE.

- Bearings and Seals:

The bearings and seals internal to the working gas of the engines must operate without lubrication. Both configurations can use contact bearings and seals with their associated friction and wear issues. FPSE can, however, utilize gas bearings to achieve long life which is one reason this technology is favored in space applications. As indicated subsequently, however, the costs associated with achieving

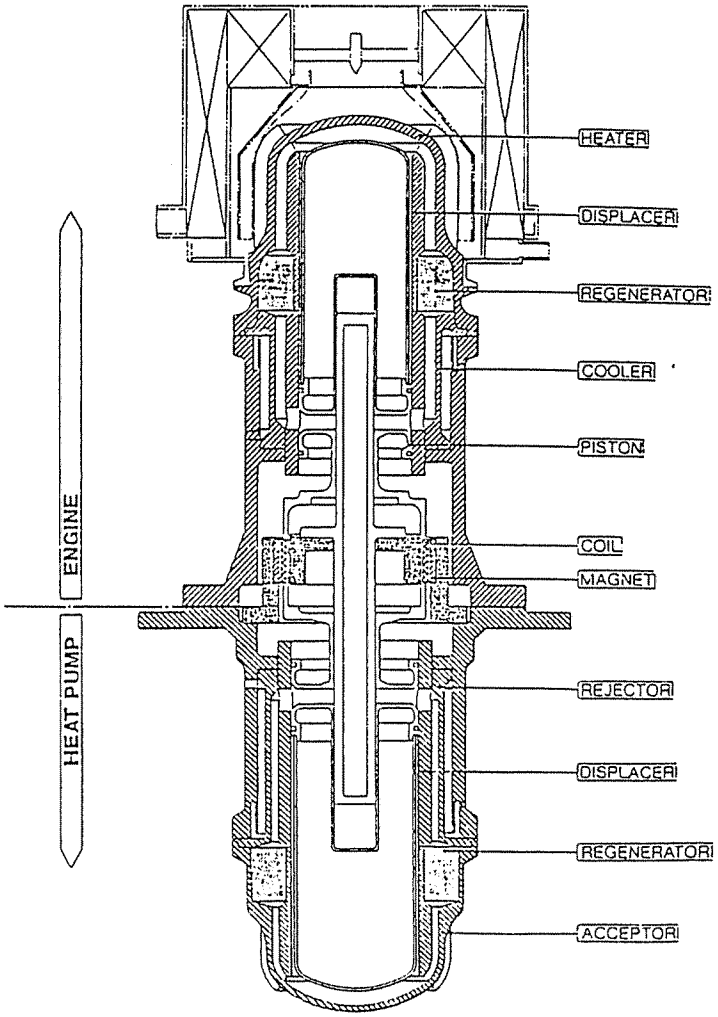

Free Piston duplex Stirling heat pump

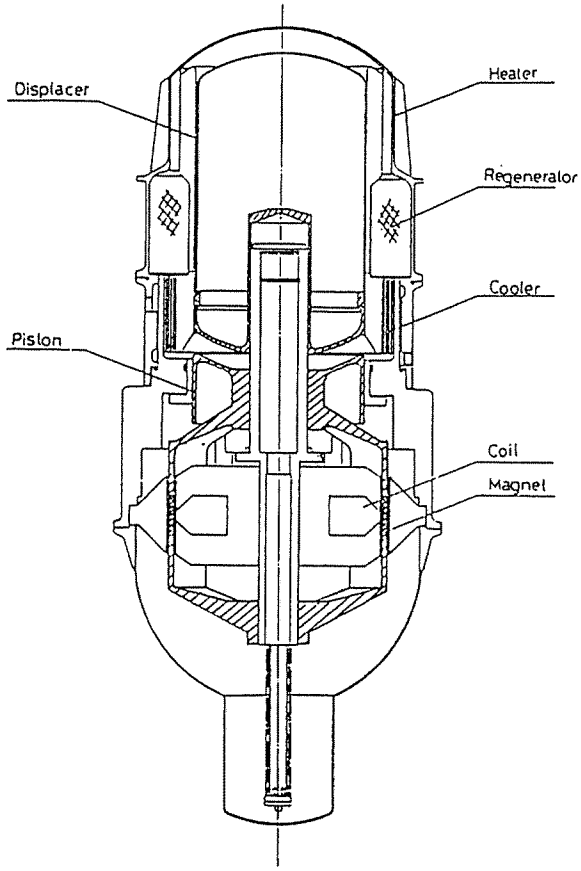

1 kW free piston Stirling engine alternator

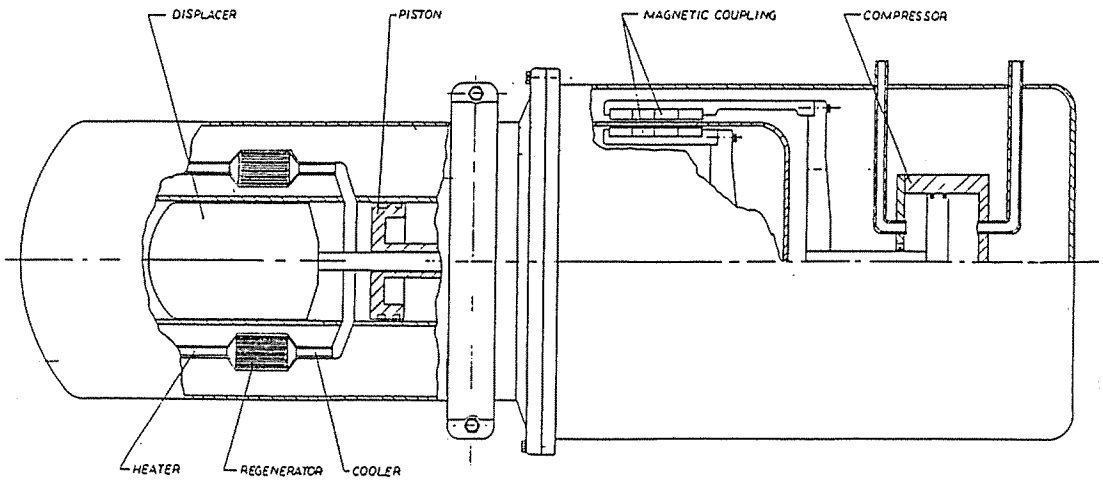

Schematic of Free-Piston Stirling Engine/Magnetic Coupling/Compressor

Figure 2.3 Options For Load Coupling
To A FPSE

the tight machining and assembly tolerances associated with gas bearings and clearance seals may preclude their use in engines used for building applications.

As shown in Figures 2.1 through 2.3, the internal bearings and seals do not appear important based on their impact on a system schematic. However, experience with long lived spaceborne cryogenic equipment and Stirling engine endurance testing indicate that they are a fundamental life/reliability issue with both FPSE and KSE systems.

Per the discussion above, both FPSE and KSE share most of the same subsystems impacting on their thermal performance characteristics. The major differences impacting on practical applications are associated with the means for power extraction and, possibly, the design options for internal bearings and seals which, in turn, strongly impact on life and reliability potential.

3.0 ISSUES OVERVIEW

Both FPSE and KSE technologies are being pursued by companies highly skilled in the design and construction of complex thermal-mechanical equipment. In fact, some companies (for example MTI and Sunpower) are involved in the development of both technologies albeit for different applications. The fact that both technologies are being pursued worldwide is indicative of the complexity of the technical issues involved in selecting one technology option over the other. The following sections briefly describe the advantages of both design approaches as described by their proponents.

3.1 Advantages of the FPSE

The FPSE has several potential major advantages as compared to the KSE option. The most important of these relate to a hermetic construction and simple geometry leading to long life and low cost. The key design features of the FPSE leading to these advantages are the elimination of the shaft seal required of KSE devices and the potential of a simple construction by eliminating the crankshaft and associated mechanisms.

a. Shaft Seal Elimination

One of the major incentives for developing the FPSE is to eliminate the shaft seal required by KSE configurations. So doing leads to several major advantages since it:

- Allows for a truly hermetic construction which reduces the possibility of working fluid leakage leading to system failure and/or the need for frequent replenishment of the gas supply.
- Eliminates one of the primary components in a KSE which limits life and is a source of system unreliability.
- Eliminates a high cost component required by the KSE due to the need for precision machining and assembly.
- Eliminates one of the sources of mechanical losses in the engine since low leakage shaft seals tend to have tight fits and high friction losses.

It should be noted that when decisions were being made in the late 1970's to pursue FPSE for heat pump drive applications, shaft seals on KSE had useful lives which were typically on the order of a few hundred hours. This compares with the need for system lives of over 25,000 hours. As indicated subsequently progress has been made in the design of shaft seals with useful lives approaching 10,000 hours having recently been demonstrated. Nevertheless, shaft seals are still a weak link in the design of KSE for the high durability applications under consideration.

b. Simple Construction

Ideally the construction of a FPSE can be relatively simple since there is no need for the above mentioned shaft seals and no crankcase and drive linkages are required leading to the potential for reduced size and improved reliability. However, to date the means used to couple FPSE motion to a useful load for heat pump applications have usually had complexity levels comparable to the shaft seals of KSE. The potential advantage of simple, efficient, low cost construction by virtue of eliminating shaft seals still remains to be verified. Ongoing work to take advantage of recent advances in lower cost, high intensity, magnetic materials (neodynium-iron-boron) to develop compact and efficient magnetic coupling and linear alternators for use with FPSE might, however, help achieve the potential for simple construction either via direct magnetic coupling configurations or compact linear alternator systems. Another option which could significantly simplify mechanical design could be the Duplex Stirling cycle. These options would all result in hermetic designs.

c. Long Life/High Reliability

The primary factor leading to a life/reliability advantage of FPSE as compared to the KSE has generally been perceived to be the above discussed elimination of the shaft seals. There are, however, several other factors which in the long run could prove equally as important for high durability applications; most importantly the unlubricated bearings and seals required to prevent leakage of working gas by the pistons and to prevent metal surfaces from rubbing leading rapidly to erosion and system failure. Since there can be no lubrication within the working volume the piston rings and internal bearings are made of a low friction materials - such as Rulon LD. The life of such unlubricated bearings has not been demonstrated beyond about 10,000 hours in KSE applications. Also, the products of wear (dust, etc.) can in themselves limit system life by plugging fine pored heat exchanger surfaces, most importantly the regenerator.

The FPSE configuration has potential advantages over its KSE counterpart relative to bearings and seals. The lack of mechanically induced side loads (in some configurations) allows the use of gas bearings whereby there are no rubbing surfaces and life is, in principle, infinite. The life potential of gas bearings in free piston device applications had been demonstrated by extended life testing of cryogenic refrigerators utilizing free piston configuration and more recently by testing of an MTI FPSE for NASA Lewis. A lingering issue relative to the use of gas bearings in commercial applications is the very tight machining tolerances required for their implementation with associated cost ramifications.

d. No Lubrication

The KSE requires lubrication in the crankcase which compromises engine life/reliability for two reasons. The aforementioned shaft seal must prevent the lubrication from migrating into the working volume of the

engine. Experience at NASA indicates that this very quickly leads to failure of the piston rings as the lubricant decomposes on the hot engine surfaces and forms abrasive compounds. Also, the need for lubrication represents a maintenance/reliability issue similarly as in a conventional I.C. engine. Proponents of KSE point out, however, that the oil in a KSE is not subject to the hot combustion gases as in a I.C. engine and that, therefore, the lubrication need only be replaced every 5000 hours or so (as compared to every 500 to 2000 hours in a I.C. engine).

3.2 Advantages of the KSE

The KSE has several practical advantages as compared to FPSE options. These advantages relate to the ability to better understand and model system performance characteristics leading to more consistent performance levels and the fact that the rotary shaft output allows using conventional end use equipment (heat pump compressors, generators, etc.) These two advantages are discussed below:

a. Performance Predictability:

The dynamic motion of the pistons in a KSE are determined by mechanical linkages. This greatly simplifies the modelling of system performance levels as compared to FPSE equipment which, in turn, facilitates the design of KSE and result in relatively good agreement between design predictions and measured performance.

By contrast, the performance of first generation FPSE system has often fallen far short of expectations due, in part, to the complex interactions of dynamic and thermodynamic processes. This is of serious practical concern and can have a significant impact on the cost and duration of the development process.

However, recent experience with FPSE systems by both Sunpower and MTI have indicated performance potential (efficiency) approaching that of KSE. The improved understanding and growing experience with FPSE should reduce perceived advantages of KSE associated with performance predictability and development risk.

b. Coupling Systems

The output of KSE is a rotary shaft which can be coupled to conventional end use equipment, as is the case with common internal combustion engines.

This represents a major advantage as compared to FPSE where the end use equipment must be specially designed. As a result, KSE can use mass produced refrigerant compressors in heat pump applications and conventional electric generators in cogeneration applications with obvious favorable cost ramifications.

By contrast, FPSE systems developed to date must develop highly specialized compressor arrangements (for example, hydraulically

actuated) and linear alternators to perform a useful function. This has negative cost implications on two counts:

- It increases the technology development cost since special end use equipment must be developed along with the engine system.
- It increases system production cost since special production of end use equipment is required which has particularly strong impacts at lower production quantities associated with the market introduction phase.

As indicated above, the primary motivation for pursuing the FPSE technology was and remains the elimination of the shaft seal and its associated mechanical transmission. An additional benefit was perceived to be the potential to use gas bearings and clearance seals thereby eliminating mechanical wear resulting in the potential for very long life and high reliability. The next section examines the practical importance of these benefits based on recent experience with both technologies in the U.S., Sweden, and Japan.

4.0 COMPARISON OF CURRENT SYSTEMS

Figure 4.1 compares key technical performance characteristics of FPSE and KSE based on experience with both engine configurations over the last 10 years. Observations on these comparisons include:

4.1 Efficiency:

As indicated, KSE resulting from the U.S. automotive engine program have verified efficiency levels of 34% including the effects of combustion system losses. Smaller KSE engines have also demonstrated the potential for high efficiency levels(20% to 30%). The high efficiency engines all operate at rather high heater head temperatures and employ state of the art heater head air preheater and regenerator, heat exchanger designs. Lower cost versions of these engines designed for near term commercialization usually compromise somewhat on efficiency, by reducing temperature levels, the performance of heat exchangers, pressure levels, and speed.

FPSE have recently demonstrated efficiency levels comparable to these achieved with KSE with the MTI unit having operated with an indicated efficiency of almost 30%. Most FPSE have tended to operate at somewhat lower efficiency levels than their kinematic counterparts. This reflects several factors including the relatively limited effort devoted to FPSE development as compared to KSE, the added complexities introduced be the free movement of the pistons complicating the design process, and, in some cases, additional losses associated with gas springs, power coupling, and gas seal leakage.

Performance analyses of both FPSE and KSE suggests that they should when properly designed, be comparable in their efficiency potential based on the thermodynamic cycles executed. There are, however, different loss mechanisms associated with the two technologies which could impact on net efficiency levels based on power delivered to a useful load. Several major differences in the technologies include:

Mechanical/Shaft Seal Losses In KSE:

One reason for selecting FPSE for residential sized heat pump drives in the late 1980's was the perception that the mechanical losses associated with the shaft seals and associated mechanical linkages of small KSE would severely impact on the shaft efficiency - particularly in the smaller units (3 kW) required for residential applications.

The basis for this perception is indicated by Figure 4.2 which identifies a multiplicity of mechanically induced loss mechanisms associated with the rod seals, lubrication system, and kinematic drive. Figure 4.3 indicates that all these mechanisms contribute substantially to the mechanical losses. Results of testing and analyses using current shaft seal and crankcase designs suggests, however, that this concern may now not be a major factor. For example, the mechanical losses with the SPS units and several of those developed in Japan even at 3 kW output are in the 15 - 20% range, i.e.

ENGINE CONFIGURATION

Performance Parameters	FPSE	KSE	Observations
Efficiency	- 18-30%	- 22 - 34%	- No major difference in well developed systems
	- Significant power coupling and gas spring losses		
Size/Weight	- Most units to date have been bulky due to coupling mechanisms and need for dynamic balancing	- Automotive program emphasized size and weight	- Probably no major difference in well developed systems in 3-10kW size range
	- Linear alternator designs should improve this parameter	- Swash plate designs can further reduce size/weight	
Vibration & Noise	- Inherently unbalanced requiring special design features	- Dynamically balanced using conventional techniques	- Both options have low noise
Emissions	No Basic Difference Between configurations		

Figure 4.1 Technical Performance Comparison

overall mechanical transmission efficiencies of 80 to 85%. Approximately 10 - 20% of the losses are associated with piston rings - a loss mechanism which will also be present in most FPSE designs.

Gas Spring Losses In FPSE:

The dynamic motion of the pistons in a FPSE is controlled, in large part, by gas springs. These springs have significant losses associated with thermal hysteresis and gas leakage by the gas spring seals.

The losses associated with gas springs are difficult to analyze and measure since they are influenced by many variables including spring geometry, seal design,and frequency. Both analyses and the results of recent experiments at the component level indicate that gas spring losses can represent 3% to 10% of system output. These losses can, therefore, be comparable to the shaft seal losses of KSE. The use of mechanical springs is now being developed for small units (<200 watts) by one manufacturer (Sunpower) to reduce losses and simplify design.

Coupling Losses In FPSE:

One of the outstanding design issues associated with FPSE is identifying a low cost,efficient, and reliable approach for coupling the free piston motion to a useful external load. The approaches receiving the most attention currently are those using hydraulic transmissions (MTI), magnetic couplings and linear alternators (Sunpower and MTI) with recent improvements.

The hydraulic transmission losses have been reduced to the 12 - 20% range depending on system load. Magnetic couplings show promise of reducing losses to about 10% while limited experience with linear alternators has shown potential for achieving efficiency levels of 85 - 90% (10 - 15% losses). As a practical matter, therefore, to date the losses associated with coupling the output of FPSE to a useful load have been comparable to or larger than those associated with KSE.

A summary of mechanical loss mechanisms is provided by Figure 4.4. As indicated above, the loss mechanisms associated with the FPSE are more complex than with KSE and can lead to somewhat lower efficiencies for the FPSE alternative. However, the differences in efficiency potential appear to be modest and would not, in themselves, be a compelling reason to select one technology over another assuming an acceptable method of coupling Free piston motion to a useful load is developed.

4.2 Life And Durability:

There is relatively limited data available on this important issue since the programs to date have tended to emphasize attaining high performance levels as measured by efficiency and power characteristics. Also, the large automotive Stirling engine development program which has dominated funding in Stirling engine technology over the

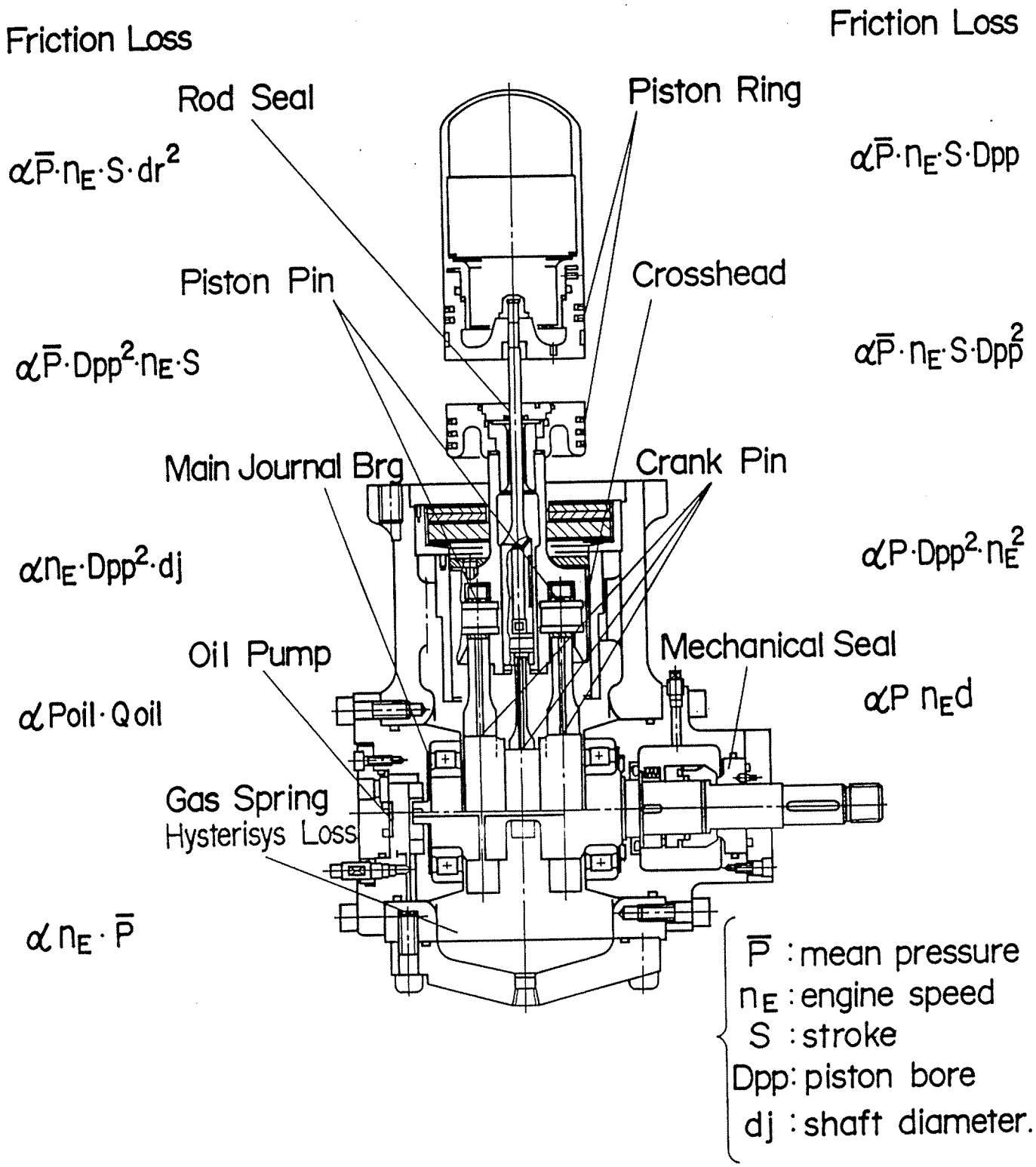

Figure 4.2 Mechanical Loss Mechanism for a KSE

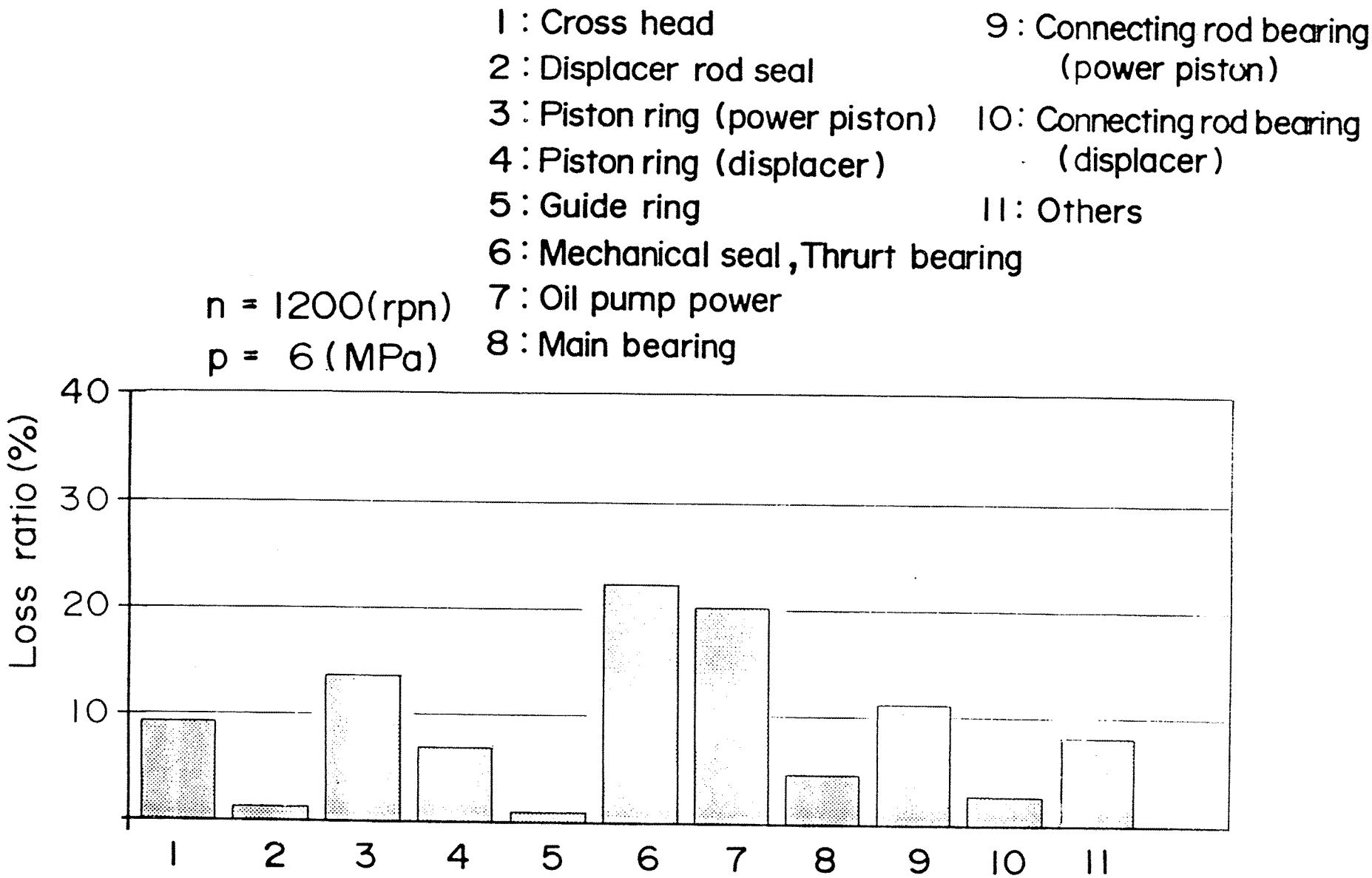

Figure 4.3 Comparison of Mechanical Loss Mechanisms for a KSE

	KSE	FPSE	
Shaft Seal/Kinematic Linkages	12 - 20%	N.A.	
Piston Rings	2 - 4%	2 - 4%*	
Gas Spring	N.A.	3 - 10%	
Coupling	N.A.	10 - 20%	(hydraulic)
		(7 - 15%)	(magnetic - linear alternator)
	15 - 23	15 - 33 (12 - 28)	

* Assuming contacting seals - Losses associated with gas bearing/seals would be comparable due to gas leakage, by the piston-cylinder wall gap.

Figure 4.4 Mechanical Loss Mechanisms - Comparison Between FPSE and KSE Options

decade did not stress long life since such engines only have to operate about 3000 - 3500 hours during the life of most cars. General comments on experience with life/reliability of Stirling engines are:

- The single acting Stirling engines being developed by SPS V-160 have demonstrated the longest life and best reliability to date of any of the KSE systems. For example, the unit being operated by the sewage plant in Linkoping, Sweden has run for over 19000 hours, albeit with a shaft seal and piston ring replacement at approximately 9000 hour intervals. This life potential is being verified by testing on 10 engines by SPS in the U.S. as part of a GRI funded program.

- The only life testing performed on FPSE systems has been done by MTI as part of a program with NASA. These tests were done for a period of 9000 hours during which no wear or other failure mechanisms were observed on the mechanical components. This system used gas bearings and seals which eliminates mechanical contact between moving parts. Similarly, potential for long life using gas bearings and clearance seals has been demonstrated on free piston cryocoolers developed by Arthur D. Little, Inc. for spaceborne applications.

- No life testing has been undertaken with FPSE using contact bearing and seals. This represents a major gap in the data base complicating the task of assessing the potential of this configuration option to achieve the life/reliability targets.

- Hughes Aircraft Company has been developing Vuillevmier (VM) Cryocooler technology for spaceborne applications for over 10 (ten) years utilizing helium as the working gas. This related experience also indicates the internal unlubricated bearings as being a major life limiting factor. Extensive testing does show, however, the potential for useful lifetimes in excess of 25,000 hours on piston rings - albeit using low speed, low pressure, equipment.

There are several factors which limit the life/reliability of both FPSE and KSE including high temperature thermal cycling of hot end components, working gas containment through static seals, and ancillary components associated with the combustion and control systems. Several developers indicate these factors are currently the primary cause for unscheduled shutdowns. The most fundamental limit on life is, however, probably associated with the unlubricated bearings and seals contained in the working space of the engines. For this reason, this subject is discussed in more detail in section 5.0 with emphasis on possible differences between FPSE and KSE technology.

As indicated in section 3.0, one of the rationales for selecting FPSE technology for long life heat pump applications was the potential to use gas bearings and clearance seals, and thereby eliminating the above problem associated with unlubricated seals. This is the design strategy pursued by MTI in their Stirling heat pump development

program. The ability to use such gas bearings would provide FPSE with an inherent advantage in achieving the long life and reliability required for most building applications. Recent cost estimates of such bearing systems as part of DOE/GRI funded heat pump programs indicate, however, they mitht not be consistent with commercial practice due to the need for high precision machining required to achieve the narrow (< .001") radial gaps between pistons and cylinder housings. The narrow gaps are, in turn, required to result in acceptable leakage and pumping losses in the bearings and by the cylinders.

Manufacturing mating parts with clearances in the order of .0002 to .0005 inches can be performed at acceptable costs if the parts are relatively simple, e.g., the piston and cylinder of a hydraulic valve or a hydraulic valve lifter. However, when mating parts must have close clearances on several diameters, as is the case with some parets in current FPSE designs, very close tolerances (in some cases measured in millionth of inches) must be held on concentricity and, in some cases on fits as well as on dimensions. This is not accomplished as easily as for simple piston/diameter fits, and results in substantial increases in manufacturing costs. As a consequence, this technical advantage may not be of practical interest in building applications

4.3 <u>System Size And Weight</u>:

Early in the development process for FPSE it was expected that FPSE would have size and weight advantages over KSE. The primary reason for this perception was that FPSE eliminated the need for shaft seals and crankcases with their associated mechanical components. However, in a well designed system the crankcase is not a dominant contributor to system size and weight in most KSE systems, at power levels above 3 kW. This is suggested by the steady progress made in reducing the size and weight of a 3 kW industrial size KSE by Mitsubishi (per Figure 4.5) which resulted in an engine system weight of only 130 kg. The major components contributing to the size and weight of both FPSE an KSE are the heat exchangers associated with the air preheaters, heater head assemblies,coolers, and regenerators. These components are common to both types of engines and no significant difference would be expected.

The FPSE built to date have tended to have lower power to weight ratios than KSE counterparts. This reflects several features of these specific engines including some combination of:

i Relatively massive means for coupling the free piston motion to an external load (hydraulic transmissions, inertial compressors, etc.).

ii The need for gas spring and bounce spaces within the engine to control piston motion, thereby increasing the pressurized volumes.

It appears, therefore, that the weight/size penalty associated with many current FPSE units reflect specific features of those designs.

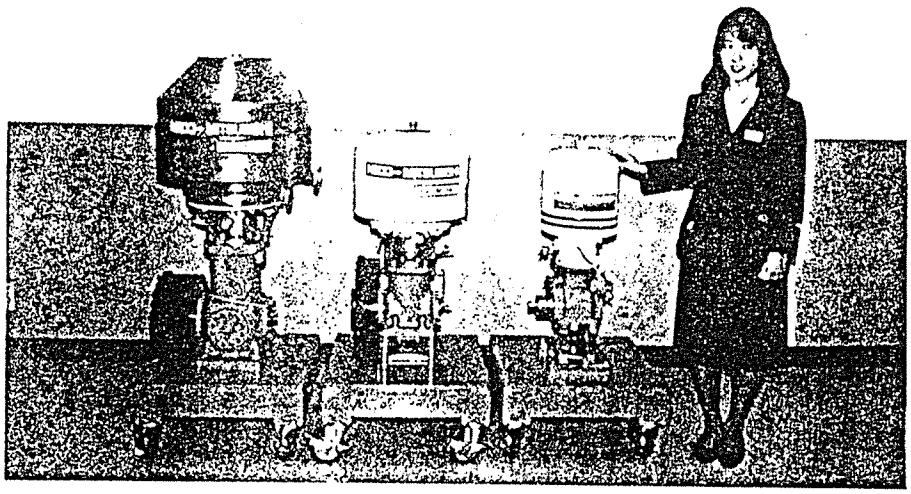

Figure 4.5 Size Reduction of Mitsubishi

3 kW KSE

For example, coupling via a linear alternator using new, high flux density magnetic materials, would reduce the size/weight associated with coupling mechanisms over prior practice. Given the major impact of common heat exchange related components on system weight and size, there is probably not a compelling difference in the two engine configurations assuming engines at the same level of development.

4.4 Noise And Vibration:

The lack of valves, pulsating combustion processes, and smooth mechanical motion results in uniformly low noise levels in most Stirling engine systems as compared to I.C. engine system alternatives. The primary sources of noise tend to be associated with the high intensity combustion systems which are common to both types of engines. The combination of low noise levels and common noise sources will result in this issue not being an important factor in differentiating the two engine types.

KSE can be mechanically balanced and little vibration is associated with their operation. This has been verified on both smaller engines for heat pump drives (both in Japan and Sweden) and the larger automotive engines. By contrast, FPSE are inherently unbalanced due to the reciprocating motion of a single power piston. This results in high vibration levels which must be dealt with to result in practical systems. Two approaches which have been used to date are:

- Use of either internal or externally mounted counterweights to balance the dynamic motion of the power piston.

- Essentially dividing the engine into two sections mounted "back to back" so that the piston motions are opposite to one another resulting in a balanced system.

Both approaches entail weight, cost, and size penalties which must be factored into the evaluation process. The second approach i.e. a split, mechanically balanced system might be too complicated to be practical for use in smaller capacities in the 1 to 10 kW range typical of residential and light commercial applications. It is, however, the preferred approach for space power systems where low weight and vibration free operation is essential.

4.5 System Costs:

Figure 4.6 summarizes the distribution of system costs as estimated by the referenced sources. Although there is no commercial practice with which to calibrate these estimates, they provide useful insights since they were, in some cases, prepared by firms specializing in estimating manufacturing costs of engine systems for the automotive industry. Observations on the cost breakdown include:

- Approximately 70% of the system costs are associated with the combustion and heat exchanger subsystems i.e. heater heads,

A.	Thermal Subsystems	Approximate % of Total Cost
	HEATER (15 - 20) PREHEATER (10 - 15) COMBUSTOR (7 - 12) COOLER (4 - 8) REGENERATOR (3 - 6) Insulation etc. (3 - 6)	40 - 70 %
B.	Mechanical Components	12 - 30%
C.	Controls*	12 - 22 %
D.	Other	5 - 10 %

* Substantial portion of controls is often for combustion system.

Figure 4.6 Stirling Engine System Cost Breakdown

regenerators, air preheaters and coolers. These subsystems are common to both FPSE and KSE and their cost should not be significantly impacted by system configuration.

- About 15% of system costs is associated with control subsystems and system packaging. Since many control functions are common to both engine configurations the variations in these factors between engine types are probably modest.

- With a KSE only about 15% of the cost is associated with the shaft seals and kinematic drive system. The FPSE, however, has a similar if not higher proportion associated with the specialized coupling subsystems (hydraulic transmissions,linear alternators, etc) required to transfer power from the free piston motion to a useful load. The early expectations that elimination of the shaft seals,etc., required by KSE represents a major cost advantage for FPSE is probably not valid.

The cost estimates are primarily for larger production quantities once a market is established. However, cost structures during the market development phase when sales volumes are low (several hundred or thousand per year) are also critical. The KSE has advantages in lower production quantities since the rotating shaft output can be connected to commercially available heat pump, air conditioning, and electric generating equipment. By contrast, FPSE will require the development and manufacture of specialized end use equipment in the form of such subsystems as unique refrigerant compressors, linear alternators, and magnetic couplings. These Stirling engine unique end use equipment components will introduce additional R&D, capital equipment, and manufacturing cost components to the overall system cost structure.

5.0 UNLUBRICATED BEARINGS AND SEALS- IMPACT ON DESIGN CONFIGURATION

Both FPSE and KSE share the need for unlubricated bearings and seals within the engine working volume. FPSE technology has the potential advantage of being able to utilize gas bearings and clearance seals resulting in unlimited life potential for these components. However, recent cost analyses in support of the GRI/DOE heat pump program suggests that the machining and assembly tolerances required for such configurations might not be consistent with the stringent cost constraints of building applications. Consequently, both configurations may have to deal with the life and reliability issues associated with contact bearings and seals. This, in turn, raises the key issue as to whether there is a fundamental life/reliability advantage of one configuration over the other in regard to this critical aspect of system design. Appendix 1 reviews some of the key issues associated with the wear rates of unlubricated piston rings as applied to Stirling engine systems. The information for this appendix was drawn from several sources including long term work at Hughes Aircraft on spaceborne cryocoolers, ring wear experiments at Philips in Holland, results of piston ring assessments as part of the automotive program, manufacturers data, and recent results from the extensive component testing program in support of the Japanese system development effort.

Results of example analyses done as part or preparing Annex 1 are summarized in Figure 5.1. The analyses of Appendix I were undertaken for both power and displacer piston rings assuming no mechanically induced side forces. This is the case for KSE since side forces are taken up by the crosshead subsystem. Side forces, if any, on FPSE systems will depend on the means of load coupling. They should, however, be negligible or low in a well designed system.

Absent mechanically induced side forces, the primary forces on the unlubricated piston rings of Stirling engines are those required to provide a positive outward pressure so that leakage due to ΔP across the rings is reduced to an acceptable level.

To cover a range of possibilities corresponding roughly to current practice, ring wear characteristics were estimated for three cases:

Case 1: Lightly Loaded Rings - corresponding to those on displacer pistons of either KSE or FPSE where the ΔP is only that across the heat exchanger bundle.

Case 2: Moderately Loaded Rings - corresponding to the power pistons in either single acting KSE or FPSE where the rear of the piston is at approximately mean cycle pressure.

Case 3: Highly Loaded Rings - corresponding to the case with power pistons in double acting KSE.

In all cases, three mean pressure levels were considered, 2000 psi, 1000 psi, and 500 psi, to examine the impact of power density on life potential.

Case	P_m(psi)	P_b(psi)	$P_{s,m}$(psi)	P_sV (psi-ft/min)	$k(\frac{in}{hr}\frac{1}{psi\text{-}ft/min})$	hrs / mm	P (W)
1	500	--	13	1900	4 (10^{-10})	52,000	10
1	1000	--	25	3750	4 (10^{-10})	26,000	19
1	2000	--	50	7500	4.3 (10^{-10})	12,000	38
2	500	65	85	12,500	4 (10^{-10})	7900	64
2	500	65	85	12,500	6.1 (10^{-10})	5200	64
2	500	65	85	12,500	20 (10^{-10})	1600	64
2	1000	130	170	-25,000	4 (10^{-10})	3900	125
2	1000	130	170	25,000	20 (10^{-10})	800	125
2	2000	260	330	50,000	4 (10^{-10})	2000	250
2	2000	260	330	50,000	20 (10^{-10})	400	250
3	500	130	170	25,000	4 (10^{-10})	3900	125
3	500	130	170	25,000	20 (10^{-10})	800	125
3	1000	260	330	50,000	4 (10^{-10})	2000	250
3	1000	260	330	50,000	20 (10^{-10})	400	250
3	2000	520	660	100,000	4 (10^{-10})	1000	500
3	2000	520	660	100,000	20 (10^{-10})	200	500

Figure 5.1 Wear Rate and Power Dissipation for Several Stirling Engine Configurations

These analyses were undertaken to display the impacts of engine design and operating parameters on ring wear trends and ,therefore, life and reliability potential. It should be emphasized that estimates of ring wear have high levels of uncertainty due to details of ring design, uncertainties in wear factors, and complex ring loadings due to the reciprocating motion and fluctuating pressure levels. The figures presented are, therefore, intended only to provide a "sense of numbers" and to show broadly based trends. With this caveat, Figure 5.1 indicates:

- The life of lightly loaded piston rings, such as those on displacer pistons, show good promise of achieving the life requirements of building applications. This would be the case for both FPSE and single acting KSE.

- For high pressure machines the life of the rings on the power pistons is unlikely to meet design goals based on current ring design constraints(materials, pressure loadings, etc.) due to excessive ring loadings. This would be the case for all the configurations considered.

- The potential for long ring life is greatly enhanced by reducing engine working gas pressure levels due to associated reduced forces on well designed piston ring systems. This option is available to both configurations. This observation is consistent with the very promising life characteristics being shown by the derated SPS systems and ring wear measurements by Sunpower in their low pressure FPSE machines.

- Even with low pressure systems the potential to achieve the needed life and reliability will depend on achieving wear rate factors on the low end of those reported. This, in turn, is contingent on the details of ring design, material combinations, temperature of operation, and other factors often not fully understood. In short, this area requires considerably more investigation in order to better establish the design parameters leading to long,reliable, life.

- Double acting KSE have the advantage of higher power densities which is critical for many applications - for example, vehicular propulsion. However, such machines tend to have higher pressure drops across power piston rings which would negatively impact life potential.

As indicated above, there is not necessarily a major difference between the loadings of the piston rings in FPSE and single acting KSE for similar assumptions relative to system pressure levels, speeds,etc. Consequently, both configurations show similar potential for achieving the life goals for the unlubricated internal bearings assuming similar design strategies focussing on long life. Of particular importance, however, is the impact of engine design parameters (pressure levels, speed, etc.) on life potential of unlubricated seals. To date, engine design has been driven primarily by performance considerations with relatively little attention to

overall engine design parameters on life/reliability issues. The above indicates that the life/reliability characteristics of internal bearings and seals should be an integral part of the engine design process.

6.0 CONCLUSIONS AND RECOMMENDATIONS

6.1 Factors Influencing Technology Selection

As indicated in previous sections, there are no compelling differences between KSE and FPSE technologies relative to most performance characteristics such as efficiency, size, emission levels, weight, and noise levels. In large part this reflects the fact that both systems utilize the same thermodynamic cycle and require the same array of heat exchangers, combustion systems, and controls. Both FPSE and KSE technologies have verified their ability to meet the technical performance requirements of building applications as measured by these operational performance parameters.

By contrast, neither configuration has demonstrated the stringent life and reliability characteristics of building applications - particularly those associated with residential applications. The most fundamental issues pertaining to the selection of KSE vs FPSE revolve around their potential to meet these life/reliability requirements and the associated impacts on engine design and operational parameters.

The primary differentiation between the technologies as applied to the high duty cycle requirements of building applications revolves around two key issues:

- The means of power extraction from the FPSE and how it compares in efficiency impacts, reliability, and cost with the shaft seal of KSE.

- The potential for improved life/reliability characteristics for FPSE by virtue of having more lightly loaded internal bearings/seals thereby allowing the use of gas bearings or longer lived contact bearings.

The final selection of technology for the building applications under consideration will eventually depend on how the following issues are resolved:

a. The verification of reliable, long lived, shaft seals would significantly reduce the incentive to develop FPSE technology.

b. The development of a low cost, reliable, and efficient means of power coupling to a FPSE would reduce the incentive to face the shaft seal issues of KSE in high duty cycle applications of interest.

c. Verification that contact bearings and seals in FPSE would have acceptable life characteristics in heat pump/cogeneration applications would tend to provide an additional reason to select FPSE for this class of application, since success would not depend on major cost reductions in the implementation of gas bearings and clearance seals.

As a practical matter these issues will not be resolved quickly and a case can be made to pursue either or both technology options which reflects the current reality i.e. both technologies are being pursued absent a clear technical/cost advantage for one technology over the other due to continuing uncertainty over how the above issues will be resolved.

6.2 R&D Required To Resolve Issues

As indicated above there are several key technological uncertainties which require resolution in order to better define the relative roles of KSE and FPSE for building applications. It is important that R&D programs are directed to resolving these uncertainties at an early date so that system level programs are properly focussed. Current programs by SPS in Sweden and the U.S. and by several companies in Japan are focussed on exploring the life and reliability potential of shaft seals appropriate for use in building applications. By contrast, there is only a modest effort directed toward developing more effective means of coupling FPSE to useful loads and to verifying the long life potential of contact bearings in FPSE operation. The key issues to be addressed by an R&D program relative to generating information needed to better select which technology is most appropriate for specific applications should stress:

1. The development of low cost, reliable, means for coupling FPSE to useful loads. Such technologies could include:

   - magnetic couplings
   - linear alternators
   - Duplex Stirling

2. The impact of engine design parameters on the life/reliability of unlubricated bearings and seals with emphasis on the difference between KSE and FPSE.

   Specific parameters to be assessed relative to wear rates and friction losses include:

   - Pressure levels
   - Double vs Single acting configurations
   - Heat exchanger pressure drops
   - Operating speeds
   - Specifics of piston ring and bearing designs.

3. Exploration of design options for FPSE which might allow the use of low cost gas bearing/clearance seals by eliminating the "stack up" tolerances of current designs which lead to machining/assembly precision requirements with unacceptable cost ramifications.

4. The life/reliability of shaft seals as influenced by engine design parameters

   - Pressurized crankcase
   - Engine operating conditions (speed, mean pressure levels, etc.)
   - Single vs double acting configurations.

Several of the activities indicated above are already in progress, for example, the development of magnetic couplings via a DOE supported program to address item 1. However, the issues raised above impact the broad range of engine design and selection considerations and should be considered for inclusion as part of cooperative R&D under the direction of the IEA Annex XI program.

APPENDIX 1.0

IMPACT OF SYSTEM DESIGN ON WEAR OF UNLUBRICATED SEALS

PISTON RING WEAR

I. Background

Recent focus on extending the life or the mean time between service intervals for Stirling engines has identified piston seals as an area of primary concern. In the past, emphasis on Stirling engines has focused upon achieving a high percentage of the Carnot efficiency. Now that the thermodynamic superiority of the Stirling engine has been well established, however, emphasis is shifting toward obtaining hardware lifetimes comparable with other engines on the market. Efficient and economical sealing of the displacer and power pistons is a primary area of concern when attempting to increase engine life and reliability. Although long-life and efficient operation can be obtained with clearance seals, economical production of this sealing system is difficult, since radial clearances of less than 0.02 mm (with commensurate tolerances) must be maintained at more than one axial location (*e.g.,* displacer-piston-to-cylinder and gas-spring-plunger-to-cylinder). In addition, clearance seals are vulnerable to any foreign matter. In this section, use of sliding seals will be discussed. Sliding seals offer the advantage of being much less expensive to produce or replace than clearance seals; however, adequate prediction of seal wear must be available. A Stirling engine development program conducted at General Electric suggested that wear rates of available piston rings were in excess of acceptable limits for heat pump applications.

Contact seal wear has traditionally been estimated using the Lewis equation:

$$h = kP_sV$$

where h is the wear rate in in/hr, k is the wear coefficient in (in/hr)(1/psi-ft/min), P_s is the pressure on the contact surface in psi, and V is the speed of the sliding ring relative to the cylinder in ft/min. The validity of this equation depends greatly upon the accuracy of the wear coefficient. The value of k, however, is dependent upon the ring material, contact pressure, velocity, temperature, surface finish, and time. Information from ring-material manufacturers does not include variations in the wear coefficient with respect to these parameters. When developing sliding seals for a long-life Vuilleumier-cycle cryocooler for space applications, Hughes Aircraft Company performed experiments to obtain an empirical relationship for ring wear. These results were for a few popular seal materials and were limited to a narrow range of operating conditions.

Many designs for piston-ring configurations have evolved. The design criteria seem to focus upon minimal gas leakage over the ring, with little concern for wear life. To obtain minimal leakage, high contact pressures are used, which results in very large wear rates. Also to reduce leakage, rings are designed to bear on one side of the ring groove throughout operation. For example, Philips Research Laboratories developed the ''non-return valve'' ring design. This design utilizes two rings which work together to maintain the maximum or minimum cycle pressure between the rings. Several other ring designs are presented in *Stirling Engine Technologies in Japan*, the proceedings of a conference held in Tokyo during December, 1986.

Mechanical Technology Incorporated developed the ''H-ring,'' which was designed to be pressure-balanced. This ring was a first attempt to eliminate pressure loading of the rings in order to reduce friction; however, experiments to validate the design resulted in much higher friction than expected. Based on these preliminary results, the development program was stopped. Further investigation into problems encountered with the experimental apparatus raises some question concerning the validity of the results.

II. Example

In an effort to quantify the piston ring wear and the resulting power dissipation for a typical Stirling engine, three cases will now be examined: a displacer, a FPSE or single-acting KSE, and a double-acting KSE. For each case, the effect of operating the engine at various mean pressures will also be investigated. The following input data will be used:

P_m = mean pressure = 500,1000,2000 psi

P_R = pressure ratio = 1.7

$RPM = 1800$

s = stroke = 0.5 in

b = bore = 4 in

The velocity of the piston relative to the cylinder can then be calculated to be

$V = (2)RPMs/12 = 150$ ft/min

Based on the pressure ratio of 1.7, the cycle high and low pressures can be computed, where

P_H = highest pressure during cycle

P_L = lowest pressure during cycle

For the cases to be considered, specifications for Rulon II (representative of Dixon bearing materials) will be used in the Lewis equation, $h = kP_sV$, where

P_s = pressure on ring/cylinder surface

V = velocity < 400 ft/min

$$k = \text{Lewis equation constant} = 4 - 20(10^{-10})\frac{\text{in}}{\text{hr}}\frac{1}{\text{psi-ft/min}}$$

The value of k is dependent upon surface pressure, speed, temperature, time, surface finish, *etc.*, as discussed earlier. Wear and P_sV data specified by Dixon is given in Table 1.

Calculations of wear rate and power dissipation for several cases are shown in Table 2, which is presented after the case descriptions. For some of the results, values of P_sV were used which exceed 25,000. In these cases, an approximate value of k is not clear; therefore, the two extreme values of k specified by Dixon are used to compute the wear rate and power dissipation. The values computed indicate the need for use of accurate k values during design.

To determine approximate values of power dissipation, the coefficient of sliding friction will be assumed to be $\mu = 0.15$. Dixon's stated values of μ range between 0.05 and 0.15, but the variation with pressure, velocity, *etc.* is not stated in the specifications; thus, the maximum value will be used.

Table 1 Wear data for Rulon II.

$P_s V$ (psi-ft/min)	P_s (psi)	V (ft/min)	$k\left(\frac{\text{in}}{\text{hr}}\frac{1}{\text{psi-ft/min}}\right)$
6,000	96	62.5	4.0 (10^{-10})
10,000	160	62.5	4.6 (10^{-10})
15,000	124	121	7.6 (10^{-10})
25,000	400	62.5	20.0 (10^{-10})

CASE I: Displacer

Calculations of ring wear and power dissipation for a displacer piston are based on the schematic shown in Figure 1. For this case, the contact pressure is

$$P_s = \frac{\Delta P}{2}$$

where, for a typical regenerator, the time-average pressure drop over the regenerator is approximately

$$\left.\frac{\Delta P}{P}\right)_{regenerator} = \text{pressure drop ratio over heat exchanger} = 0.05$$

which yields, for the case of $P_m = 2000\,\text{psi}$

$$\Delta P = \left.\frac{\Delta P}{P}\right)_{regenerator} P_m = 100\,\text{psi}$$

To prevent lift-off of the ring, a positive pressure must be maintained on the contact surface. In this case, the surface on the inner radius of the ring is exposed to the maximum gas pressure throughout the cycle; thus, no spring is required to maintain a positive outward force.

The Lewis equation is

$$h = kP_sV$$

where, the pressure on the contact surface is assumed to be a time-averaged value calculated as

$$P_s = \frac{\Delta P}{2} = 50\,\text{psi}$$

$$P_sV = 7500\,\text{psi-ft/min}$$

For these values of P_s, V, and P_sV, the wear factor is approximately

$$k = 4.3(10^{-10})\frac{\text{in}}{\text{hr}}\frac{1}{\text{psi-ft/min}}$$

Substituting these values into the Lewis equation yields a wear rate of

$$h = 3.2(10^{-6})\,\text{in/hr}$$

The time to wear 1 mm of material is approximately 12,000 hours.

The power dissipated due to sliding friction, P, between the ring and cylinder is

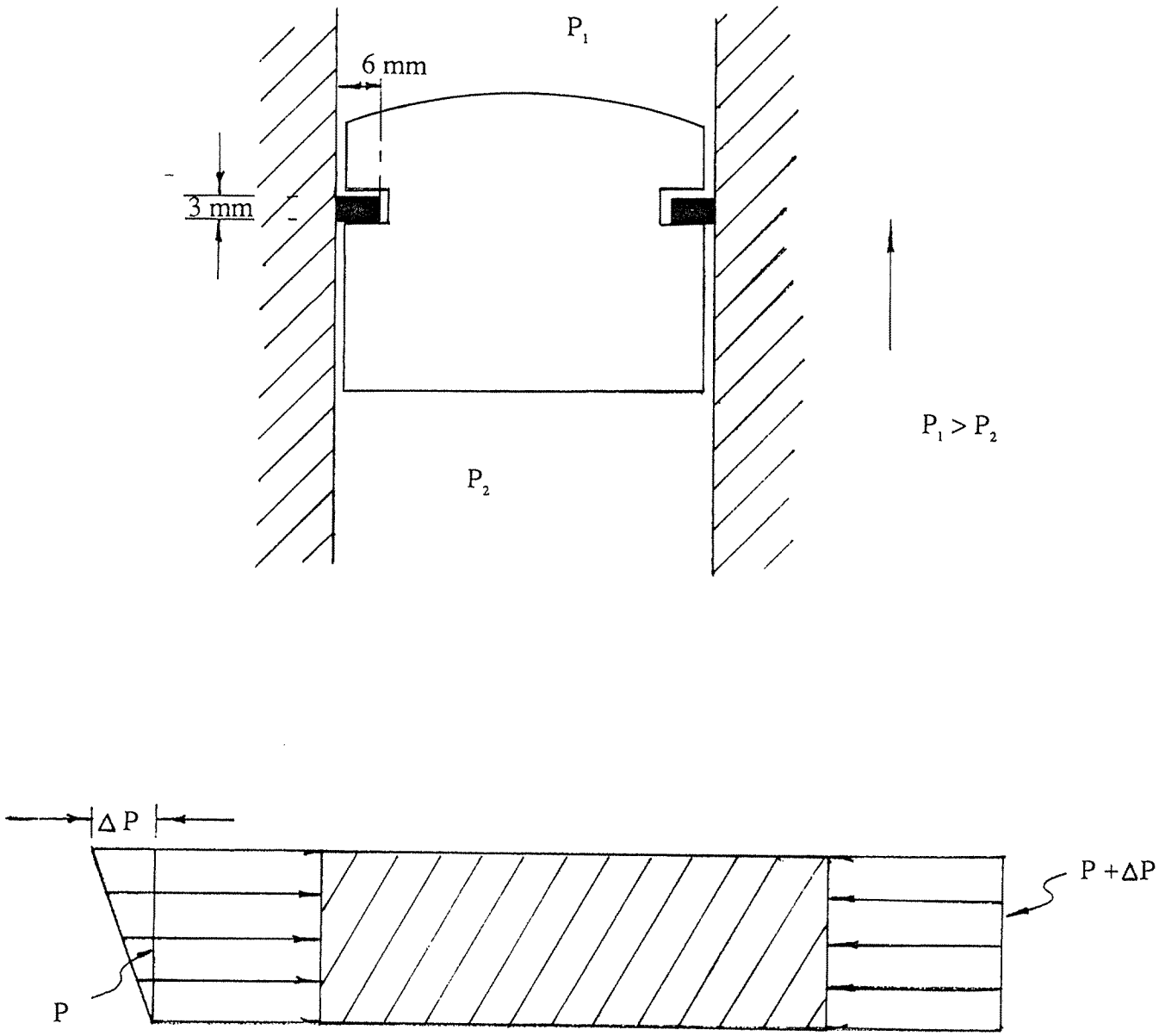

Figure 1 Schematic of displacer piston and ring for Case 1, along with free-body diagram for ring. (pressures in axial direction not included)

$$P = F_f V$$

where F_f is the force in the axial direction due to friction, and may be expressed as

$$F_f = \mu F_n$$

where,

$$F_n = P_s \pi b w$$

For this case, the power dissipated is

$$P = 38\,\text{W}$$

CASE II: Power Piston for FPSE or Single-Acting KSE

Calculations for the case of a power piston for either a FPSE or a single-acting KSE are based on the schematic shown in Figure 2. In this case, the gas pressure on one side of the ring is always P_m. The pressures on each side of the piston ring in the radial direction are shown in Figure 3. A force balance on the ring indicates that, for $P_m = 2000\,\text{psi}$ and a pressure ratio of 1.7, the contact pressure due to the spring force, P_b, must be

$$P_b = \frac{2520 - 2000}{2} = 260\,\text{psi}$$

which is the spring pressure required to avoid lift-off of the ring.

The contact pressure at any point in the cycle can then be calculated using

$$P_s = P_m + P_b - \left(\frac{P + P_m}{2}\right)$$

where P is the sinusoidally varying pressure of the gas. The value of P_s ranges between 0 and 520 psi.

This magnitude of P_s varies sinusoidally over the cycle period. The average magnitude of P_s can be determined by integrating over the cycle period to obtain

$$P_{s,m} = \frac{2}{\pi} P_s$$

In this case, $P_{s,m} = 333\,\text{psi}$.

The Lewis equation can now be used to obtain the wear rate:

$$h = k P_{s,m} V$$

where, in this case, the appropriate value of the wear factor is

$$k = 20(10^{-10}) \frac{\text{in}}{\text{hr}} \frac{1}{\text{psi-ft/min}}$$

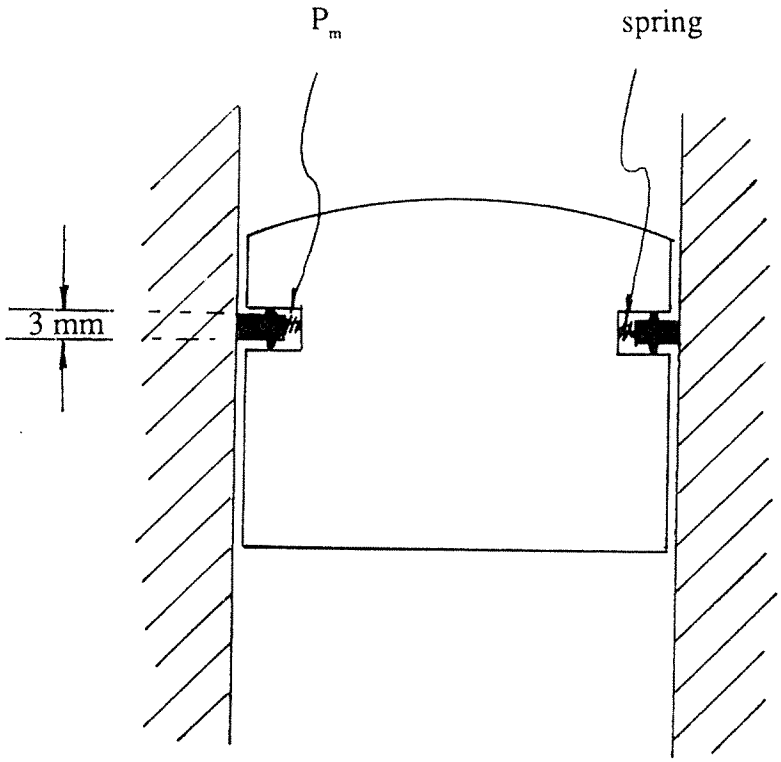

Figure 2 Schematic of piston/ring configuration used for FPSE or single-acting KSE and for double-acting KSE.

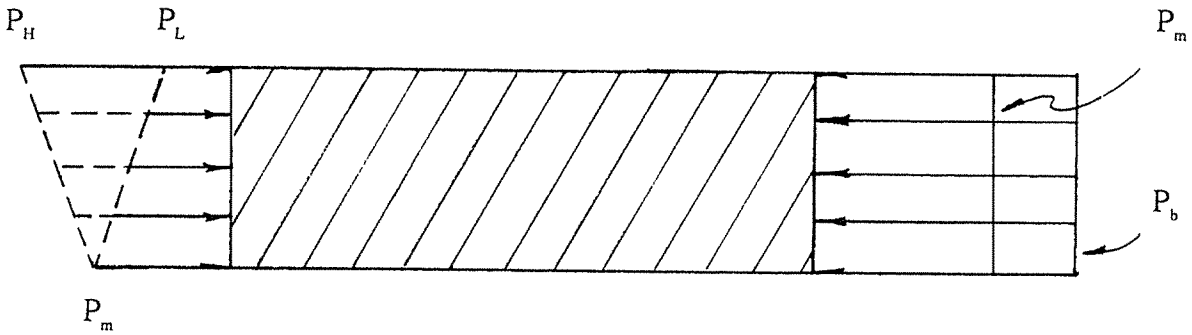

Figure 3 Free-body diagram for Case 2, a FPSE or single-acting KSE. (pressures in radial direction not included)

Based on these inputs, the wear rate is

$h = 10^{-4}$ in/hr

The time required to wear 1 mm of material is approximately 400 hours.

The power dissipated due to sliding friction is

$$P = \mu P_{s,m} \pi b w V = 250\,\text{W}$$

CASE III: Power Piston for Double-Acting KSE

Calculations for the power piston of a double-acting KSE are based on the same configuration as that shown in Figure 2. In this case, the pressures on both sides of the ring are sinusoidal and vary from P_L to P_H. The pressures will be assumed to be 180 degrees out of phase in order to illustrate a limiting case with a maximum pressure difference over the ring. The pressures acting on the ring are shown in Figure 4. A force balance on the ring indicates that, for $P_m = 2000$ psi the contact pressure due to spring force must be $P_b = 520$ psi, in order to avoid lift-off.

The contact pressure at any point in the cycle can then be calculated using

$$P_s = P_m + P_b - \frac{P_1 + P_2}{2}$$

where P_1 and P_2 are the sinusoidally varying pressures on the top and bottom sides of the ring. The value of P_s ranges from 0 to 1040 psi.

The average magnitude of P_s is

$$P_{s,m} = \frac{2}{\pi} P_s = 666\,\text{psi}$$

For the Lewis equation,

$$P_{s,m} V = 100{,}000\,\text{psi-ft/min}$$

which is much larger than any value recommended for use by Dixon for their materials. The wear factor is assumed to be

$$k = 20(10^{-10}) \frac{\text{in}}{\text{hr}} \frac{1}{\text{psi-ft/min}}$$

Based on these inputs, the wear rate is

$h = 2(10^{-4})$ in/hr

The time required to wear 1 mm of material is approximately 200 hours.

The power dissipated due to sliding friction is approximately 500 W.

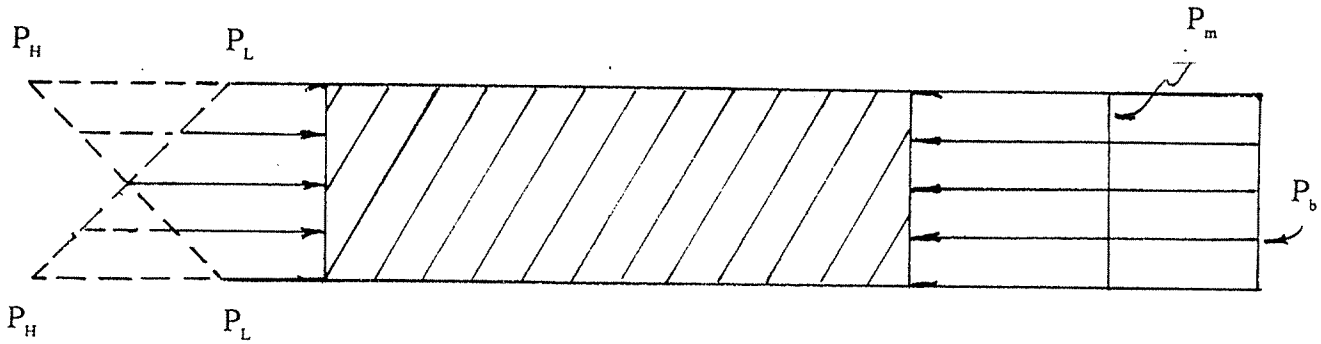

Figure 4 Free-body diagram for Case 3, a double-acting KSE (pressures in radial direction not included)

Table 2 Wear rate and power dissipation for several Stirling engine configurations.

Case	P_m(psi)	P_b(psi)	$P_{s,m}$(psi)	P_sV (psi-ft/min)	$k(\frac{in}{hr}\frac{1}{psi\text{-}ft/min})$	hrs / mm	P (W)
1	500	--	13	1900	4 (10^{-10})	52,000	10
1	1000	--	25	3750	4 (10^{-10})	26,000	19
1	2000	--	50	7500	4.3 (10^{-10})	12,000	38
2	500	65	85	12,500	4 (10^{-10})	7900	64
2	500	65	85	12,500	6.1 (10^{-10})	5200	64
2	500	65	85	12,500	20 (10^{-10})	1600	64
2	1000	130	170	-25,000	4 (10^{-10})	3900	125
2	1000	130	170	25,000	20 (10^{-10})	800	125
2	2000	260	330	50,000	4 (10^{-10})	2000	250
2	2000	260	330	50,000	20 (10^{-10})	400	250
3	500	130	170	25,000	4 (10^{-10})	3900	125
3	500	130	170	25,000	20 (10^{-10})	800	125
3	1000	260	330	50,000	4 (10^{-10})	2000	250
3	1000	260	330	50,000	20 (10^{-10})	400	250
3	2000	520	660	100,000	4 (10^{-10})	1000	500
3	2000	520	660	100,000	20 (10^{-10})	200	500

III. Other Results and Observations

Throughout this report, we have emphasized that the value of k is dependent upon several factors, which have not been correlated in any comprehensive manner by the manufacturers or by any investigator that we are aware of. A further complication that has not yet been discussed involves the variation of k during the break-in period. A typical variation of wear rate versus time is shown in Figure 5. Clearly, the wear rate during the break-in period is much higher than after break-in. The time required for break-in is not well documented. One should note that the length of the break-in period depends on the specific application, due to variations in pressure, speed, temperature, *etc.*

The information presented in the previous section can be compared with experimental results obtained by Hughes during development of their VM cryocooler. A wear equation developed by Hughes is given by

$$w = K(P_s V)^n t$$

where w is the wear measured in inches, K is the wear factor, P_s is the surface pressure measured in psi, V is the velocity measured in ft/min, n is the exponential constant, and t is time measured in years. The various seals in the VM cooler operate at different temperatures, which results in different values of K and n, even for the same material.

Hughes determined that Rulon J and Fluorogold brand GFF-PTFE have extended wear lives for the conditions expected in the VM cryocooler. The Fluorgold has a longer life, but the Rulon J is easier to work with, in terms of machining, *etc.* A comparison will now be made between the results given in Table 2 of this report and the results obtained by Hughes for the Fluorogold.

For the warmest stage of the VM cryocooler, which operates near room temperature, 26 ft/min, and about 7 psi surface pressure, the values of the coefficients are

$$K = 1.17(10^{-5})$$

$$n = 1.149$$

For these values, the time required to wear 1 mm, as calculated by the Hughes equation, is given in the following table for three cases which can be compared with the values in Table 2. Values for a mean pressure of 500 psi are used, since this condition best matches the conditions where K and n were determined.

Case	P_m(psi)	$P_{s,m}$(psi)	$P_s V$ (psi-ft/min)	hrs/mm
1	500	13	1900	5000
2	500	85	12,500	600
3	500	170	25,000	260

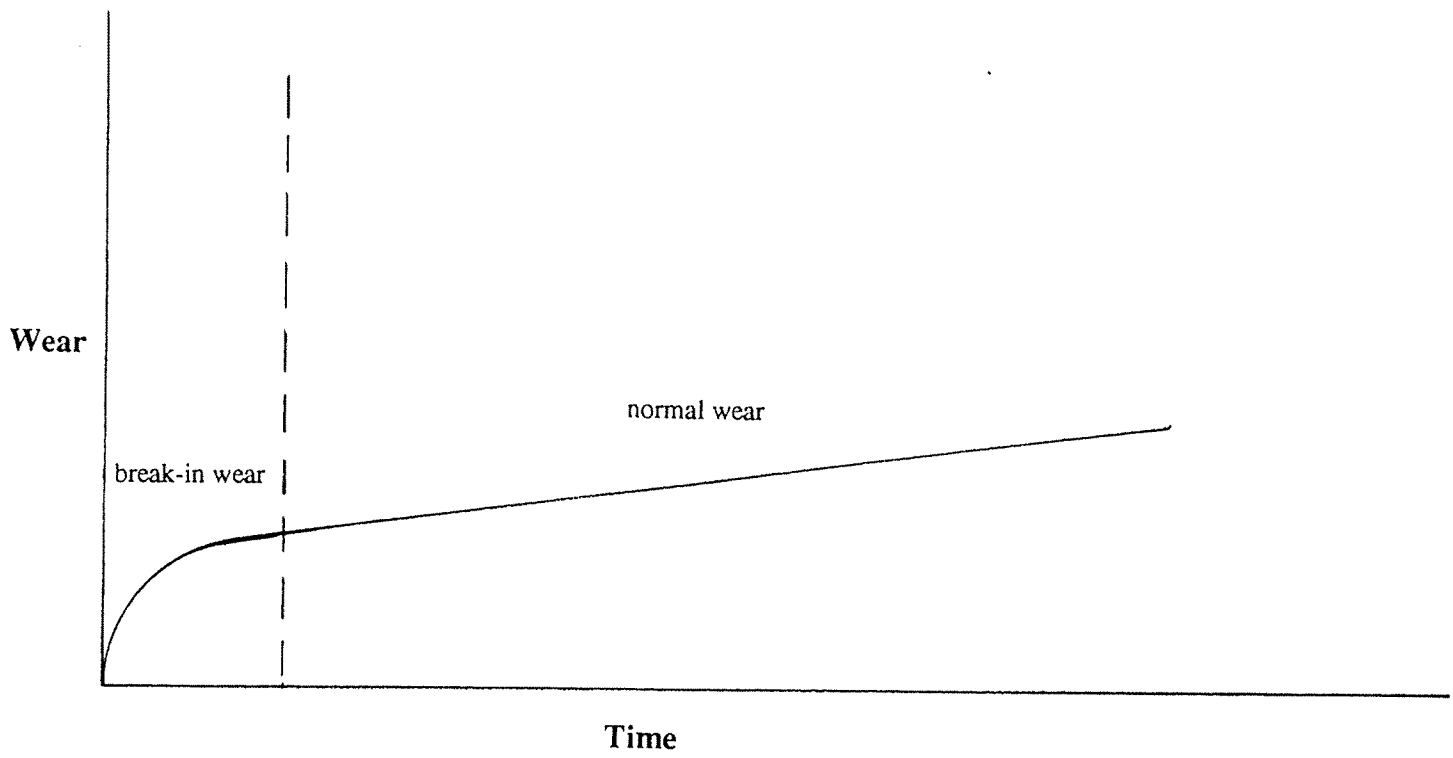

Figure 5 Illustration of Variation Of Wear Rate

The table indicates that the Hughes equation predicts a much shorter wear life than the Lewis equation used with Rulon II data. This result might be expected, however, since the value of P_sV used to determine the constants for the Hughes equation is less than 200 psi-ft/min.

APPENDIX 2

IEA REFERENCES

REFERENCES

1. Survey of Stirling Engine Projects in the United States, Japan, and Sweden, March 1987, IEA-A11-1, Prepared for ORNL by Arthur D. Little, Inc., March 1987.

2. Workshop Summary Report, Stirling Engine Technology Status and Development Issues, Tokyo, Japan, December 3 and 4, 1986, IEA-A11-2, Prepared for ORNL by Arthur D. Little, Inc., March 1987.

3. Workshop Summary Report, Stirling Engine Technology Status and Development Issues, Stockholm, Sweden, September 16, 17, and 18, 1987, IEA-A11-3, Prepared for ORNL by Arthur D. Little, Inc., October 1987.

4. Workshop Summary Report, Stirling Engine Technology Status and Development Issues, Washington, D.C., United States, July 11, 12, and 13, 1988, IEA-A11-4, Prepared for ORNL by Arthur D. Little, Inc., October 1988.