GE DOCUMENT NO. 79SDS4207

DEVELOPMENT AND DEMONSTRATION OF A STIRLING/RANKINE HEAT ACTIVATED HEAT PUMP

CONTRACT NO. EC-77-C-02-2911

SEMI-ANNUAL REPORT

NO. COO/2911-4

JULY THROUGH DECEMBER 1978

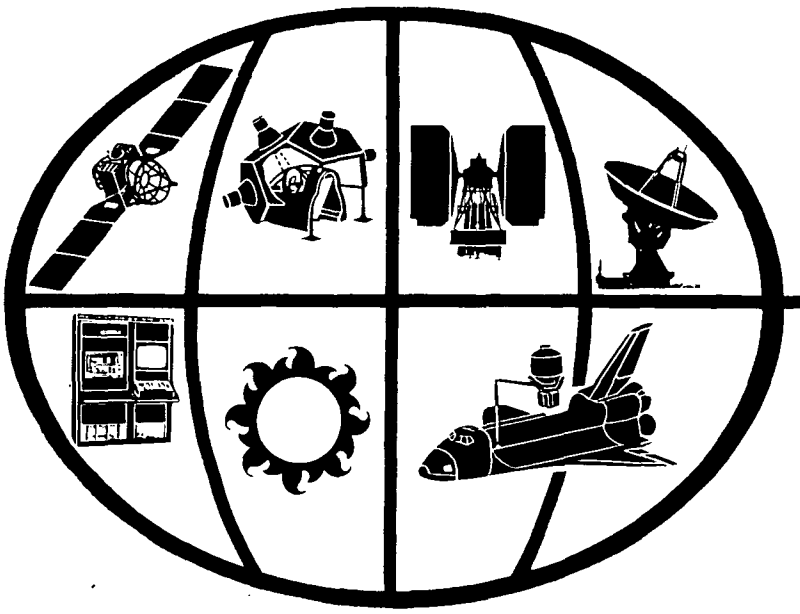

space division

GENERAL ELECTRIC

GE DOCUMENT NO. 79SDS4207

DEVELOPMENT AND DEMONSTRATION OF A STIRLING/RANKINE HEAT ACTIVATED HEAT PUMP

CONTRACT NO. EC-77-C-02-2911

SEMI-ANNUAL REPORT

NO. COO/2911-2

JULY THROUGH DECEMBER 1978

GENERAL ELECTRIC

SPACE DIVISION

Valley Forge Space Center

P. O. Box 8555 • Philadelphia, Penna. 19101

TABLE OF CONTENTS

Section		Page
1	INTRODUCTION	1-1
	1.1 Background	1-1
	1.1.1 Phase I Results	1-1
	1.1.2 Phase II Objectives	1-1
	1.1.3 Phase II Prior Accomplishments	1-4
	1.2 Progress Summary	1-8
2	PROTOTYPE 1 SYSTEM TEST	2-1
	2.1 Introduction	2-1
	2.2 Test Description	2-2
	2.2.1 Summary	2-2
	2.2.2 Heat Pump Equipment	2-2
	2.2.3 Test Facility	2-2
	2.2.4 Instrumentation	2-6
	2.3 Systems Operations	2-7
	2.4 System Matching	2-13
	2.5 Energy Balance	2-17
	2.5.1 Reduction of Heat Losses	2-17
	2.5.2 Energy Balance Analysis	2-18
	2.6 Proto 1 System Performance and Performance Potential	2-22
3	PRODUCT DEVELOPMENT	3-1
	3.1 Introduction	3-1
	3.2 Materials Development	3-2
	3.3 Advanced Combustor	3-4
	3.3.1 Heat Exchanger and Preheater Effectiveness	3-4
	3.3.2 Pressure Drop and Exhaust Emissions	3-5
	3.3.3 Flow Distribution	3-5
	3.3.4 Heater Head Temperature	3-8
	3.3.5 Combustor Efficiency	3-8
	3.4 Magnetic Starter	3-8
	3.5 Second Gas Spring	3-9
	3.6 Improved Regenerator	3-11
4	PROTO 2 SYSTEM DEVELOPMENT	4-1
	4.1 Introduction	4-1
	4.2 System Design	4-1

TABLE OF CONTENTS (Cont'd)

Section		Page
	4.2.1 System Requirements and Performance	4-1
	4.2.2 Design Trade-offs	4-2
4.3	Proto 2 Component Designs	4-12
	4.3.1 Combustor	4-12
	4.3.2 Stirling Engine	4-23
	4.3.3 Linear Inertia Compressor	4-30
	4.3.4 Controls	4-42
	4.3.5 Indoor Air Handler and Outdoor Unit	4-51

LIST OF ILLUSTRATIONS

Figure		Page
1-1	Phase I Flow Diagram	1-2
1-2	Phase II Flow Diagram	1-3
2-1	Combustor/Engine/Compressor Assembly Mounted in Test Facility	2-3
2-2	Proto 1 Outdoor Unit Hardware Arrangement	2-4
2-3	Gas Heat Pump Prototype Test Facility	2-5
2-4	Indoor Unit Test Facility	2-5
2-5	Outdoor Unit Test Facility	2-6
2-6	HAHP System Instrumentation Schematic	2-8
2-7	System Operation Schematic for Cooling Mode (95°F Day)	2-9
2-8	System Operation Schematic for Heating Mode (40°F Day)	2-10
2-9	75°F Design Point Low Firing Rate Operating Mode (Cooling Mode)	2-11
2-10	0°F Design Point High Firing Rate Operating Mode (Heating Mode)	2-12
2-11	Compressor Piston Designs Tested	2-14
2-12	Effect of Compressor Piston Mass on the Compressor Performance at Various Operating Frequency and Discharge Pressure Values	2-14
2-13	System Matching-Prototype 1 Matching Characteristics	2-15
2-14	System Testing Using Various Compressor Piston Weights	2-16
2-15	Engine Displacer Seal Ring	2-18
2-16	Performance Map with 9 lb Compressor Piston and Displacer Ring Seal	2-18
2-17	Effect of Displacer Ring on Engine Performance	2-19
2-18	System Test-Engine Heat Input and Output	2-20
2-19	Present Status of System Capacity at a Constant Firing Rate	2-22
2-20	Present Status of System COP at a Constant Firing Rate	2-23
2-21	Operating Cost Savings for HAHP	2-23
2-22	Stirling Engine Potential Improvement	2-24
3-1	Heater Head and Preheater Effectiveness Vs. NTU	3-4
3-2	Segmented Diffuser Ring	3-6
3-3	CO Vs. Excess Air	3-6
3-4	Advanced Combustor Pressure Drop Vs. Required Air Flow	3-7
3-5	Advanced Combustor Test Results (15% Excess Air)	3-9
3-6	FPSE Electromagnetic Starter, Proto 1	3-10
3-7	Proto 1 Second Gas Spring Assembly	3-12
3-8	Proto 1 Second Gas Spring Hardware	3-13
3-9	Regenerator Retrofit Assembly	3-14
4-1	Proto 2 95°F Cooling Operation	4-4
4-2	Proto 2 75°F Cooling Operation	4-4
4-3	Proto 2 45°F Heating Operation	4-5
4-4	Proto 2 0°F Heating Operation	4-5
4-5	Proto 2 Capacity Profile	4-6

LIST OF ILLUSTRATIONS (Cont)

Figure		Page
4-6	Proto 2 System COP	4-6
4-7	Reduction in Annual Savings When Using Only Auxiliary Heat Below Cut-off Temperature	4-8
4-8	Savings Tradeoff for Proto 2 Design	4-9
4-9	Proto 2 Combustor/Engine/Compressor	4-13
4-10	Glo-Bar Heating Element	4-18
4-11	Proto 2 Combustor-Inlet Housing	4-20
4-12	Proto 2 Pressure Drop Vs. Required Air Flow	4-21
4-13	Spin-on Air Filter	4-22
4-14	Two Stage Electric/Gas Valve	4-22
4-15	Proto 2 Stirling Engine Power Piston and Displacer Motion	4-26
4-16	Steady State Engine Housing Temperature	4-28
4-17	Proto 1 Steady State Engine Temperature Correlation	4-29
4-18	Proto 2 Free Piston Compressor Configuration	4-31
4-19	Proto 2 Compressor Losses	4-34
4-20	Proto 2 Compressor Performance	4-34
4-21	Proto 2 Seal Arrangement and Assembly Clearances	4-36
4-22	Proto 2 Pressure Regulator	4-40
4-23	Primary Controls Ladder Diagram (230V)	4-44
4-24	Primary Controls Ladder Diagram (24V)	4-44
4-25	Safety Interlock Diagram	4-45
4-26	Sequence Circuit Diagram	4-46
4-27	Dual Firing Rate Controls Diagram	4-48
4-28	HAHP Proto 2 Indoor Unit	4-52
4-29	HAHP Proto 2 Indoor Unit - Assembly View	4-53
4-30	Proto 2 Preliminary Outdoor Unit Selected Configuration	4-55
4-31	HAHP Proto 2 Outdoor Unit Preliminary Appearance Concept	4-57

LIST OF TABLES

Number		Page
1-1	Development Status	1-9
2-1	Stirling Engine Energy Balance	2-21
3-1	Specimen Weight Loss Summary	3-3
4-1	Proto 2 Requirements	4-2
4-2	Prototype 2 Design Point Performance	4-3
4-3	Outdoor Unit Package Tradeoff Study	4-11
4-4	Proto 2 Combustor Design Requirements	4-14
4-5	Proto 2 Materials Selection	4-15
4-6	Proto 2 Performance Summary	4-16
4-7	Proto 2 Engine Design Requirements	4-24
4-8	Proto 2 Engine Design Parameters	4-25
4-9	Proto 2 Engine Material Listing	4-27
4-10	Proto 2 Compressor Requirements	4-31
4-11	Proto 2 Compressor Design and Performance Parameters	4-33
4-12	Proto 2 Compressor Design Parameters	4-35
4-13	Proto 2 Compressor Component Surface Finishes	4-35
4-14	Proto 2 Compressor Materials	4-37
4-15	Tubular Spring Coil Material Comparison	4-41
4-16	Primary Control Requirements	4-42
4-17	Safety Control Requirements	4-43
4-18	Indoor Air Handler Features	4-54

SECTION 1

INTRODUCTION

SECTION 1
INTRODUCTION

1.1 BACKGROUND

In January 1975, General Electric embarked with the American Gas Association (AGA) on a multi-phase program for the development of a Gas Heat Pump (GHP). The Department of Energy (DOE) joined General Electric and the AGA in the program in 1976, and the Gas Research Institute assumed responsibility for the program from the AGA in 1977.

Phase I of the program was completed in December 1975, and Phase II was initiated in February 1976.

1.1.1 PHASE I RESULTS

The Phase I program followed the task structure shown in Figure 1-1. The primary objective of this program was to evaluate, through an analytical effort, if a gas heat pump product could evolve into a viable business venture. A comparison of the possible heat activated heat pump concepts showed that the Stirling/Rankine and the absorption cycle were the most promising from the standpoint of performance (potential operating savings), region of application, and market application (residential and/or commercial); the product design was performed in sufficient detail to show that the variation in manufacturing costs of the candidate systems would not significantly affect payback considerations. Further refinement of the design, cost, and performance for the two candidate systems and a definition of product introduction scenario and pricing strategies allowed a business evaluation of the two concepts to be completed. The results of these efforts were reviewed within GE and with AGA and gas industry representatives. As a result of Phase I effort, the Stirling/Rankine concept was selected as the most promising approach and a decision was made to proceed with the Prototype Development, Phase II.

1.1.2 PHASE II OBJECTIVES

The objective of the Phase II program is to demonstrate that the performance estimates generated during Phase I can be realized and that cost goals are realistic. The Phase II task flow diagram is shown in Figure 1-2.

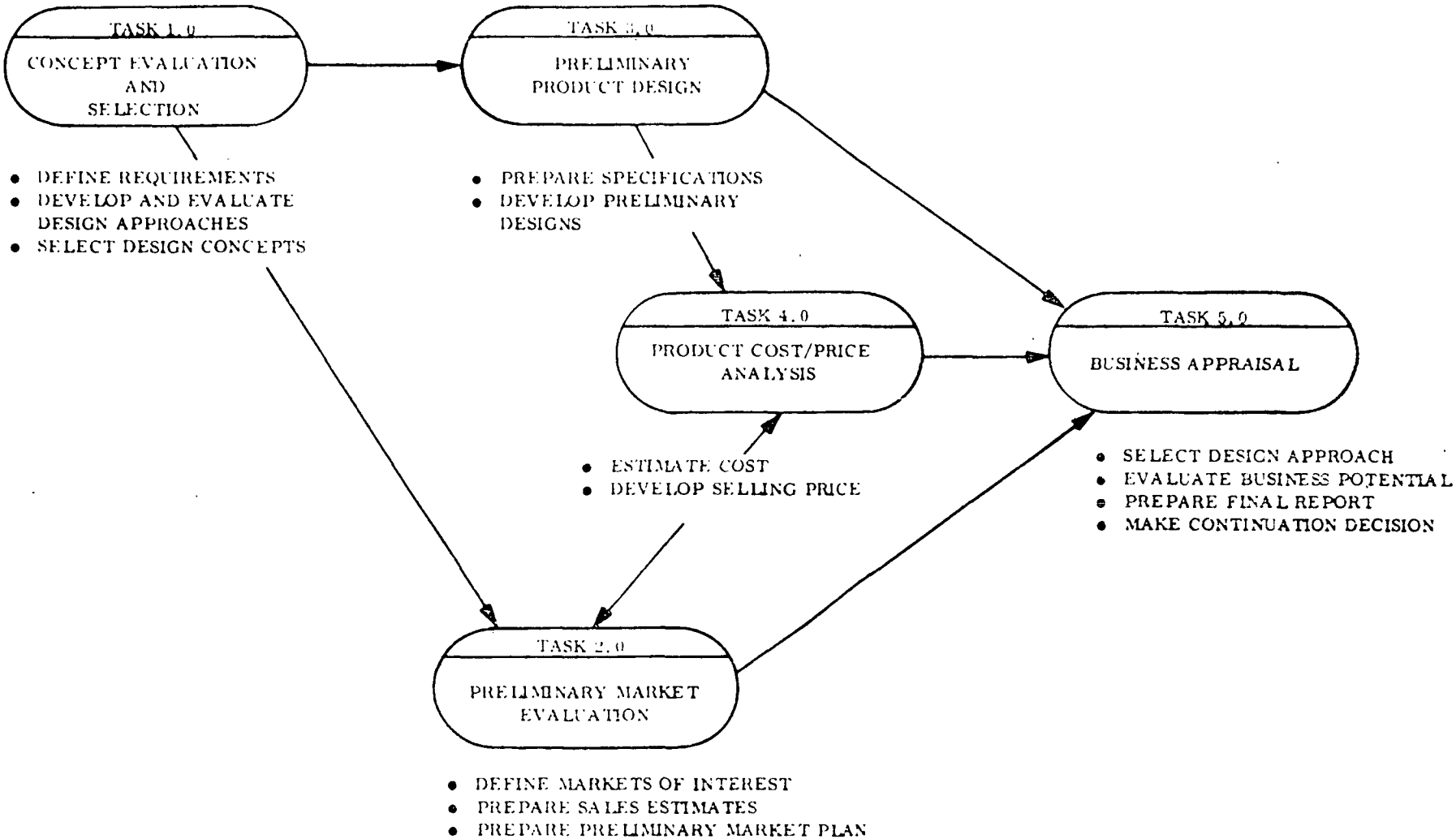

Figure 1-1. Phase I Flow Diagram

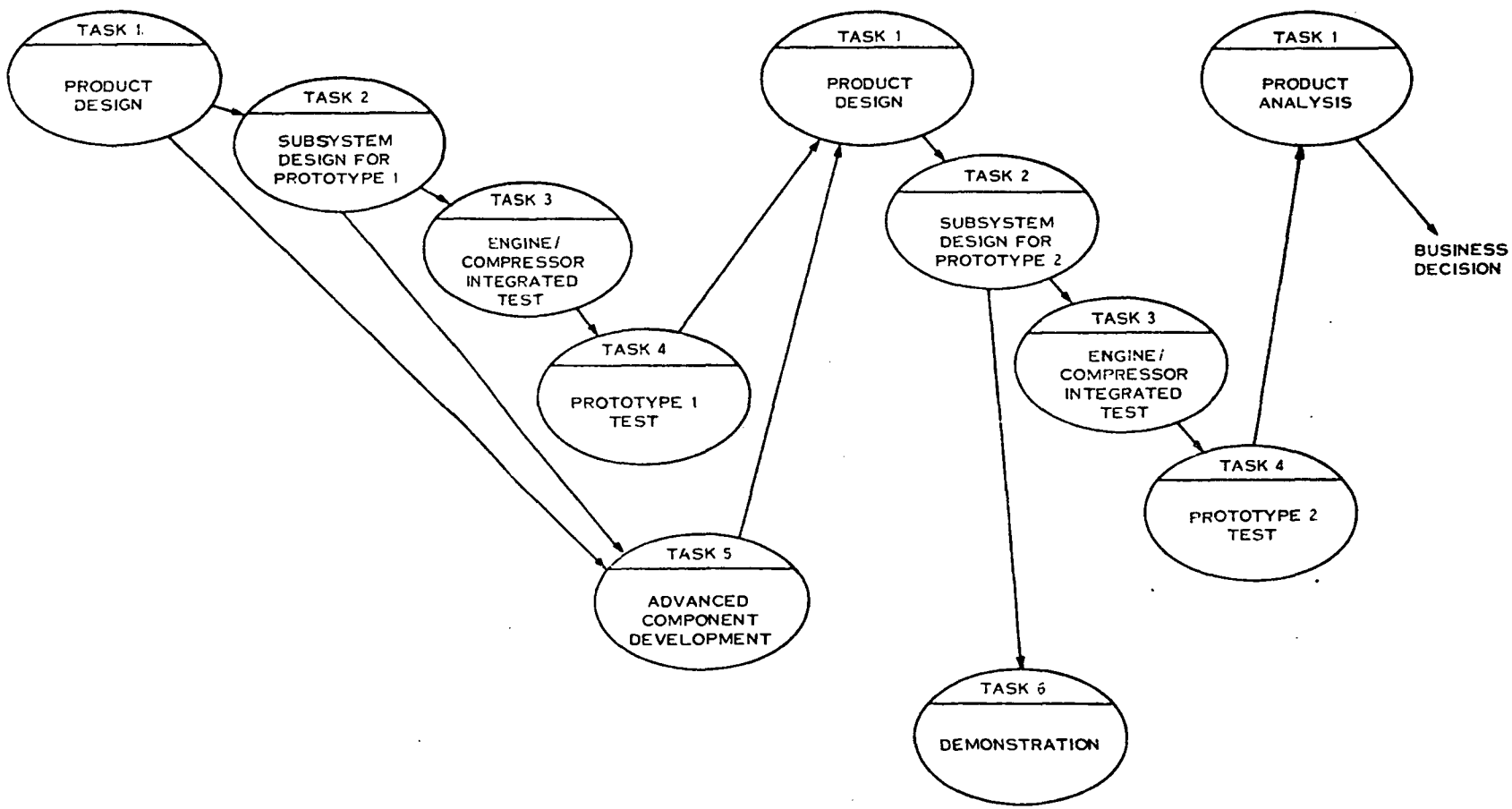

Figure 1-2. Phase II Flow Diagram

Two generations of prototype hardware will be developed during the Phase II program. Prototype 1 was the first attempt to test a complete Stirling/Rankine GHP system with heat pump configured hardware. This system is comprised of hardware which is primarily developmental in nature. The Prototype 2 system will consist of more mature hardware. It will incorporate the results of the Prototype 1 development effort and will be designed toward the eventual product.

1.1.3 PHASE II PRIOR ACCOMPLISHMENTS

The gas heat pump can be described in terms of five major subsystems: the natural gas combustor, the Stirling engine, the refrigerant compressor, the controls, and the air-handlers.

The Prototype 1 GHP is a 3-ton, split system targeted to provide approximately 64,000 BTU/hr in the heating mode at a nominal 45°F ambient temperature. The overall product performance goal was to achieve Coefficients Of Performance (COP) of 1.6 and 0.85 for the heating and cooling modes, respectively (excluding the electrical power requirements). The electrical power required for fans, blowers and pumps was set at less than 1500 watts. Based on these performance levels, the following performance goals were assigned to the major subsystems:

- Stirling Engine Cycle Efficiency: 32%
- Refrigeration Loop COP: 3.5%
- Overall Combustion Efficiency: 80%

The following sections summarize the accomplishments during the previous Phase II reporting period for the system design and each of the subsystem areas.

Product Design. During the previous reporting period, product design effort concentrated on analysis of the engine/facility load test results and subsequent engine/compressor integrated testing.

Test analyses of the FPSE with a facility loading device (helium pump) revealed excessive losses due to blow-by around the engine power piston. After the addition of piston seals, the blow-by loss was substantially reduced and the engine achieved a maximum efficiency of 17 percent and a power output of 1.4 Kw. Testing with the facility load device was limited by the constraints of the test rig. Further engine testing was accomplished in the engine/compressor integrated tests, using water for the condenser and evaporator to provide test flexibility.

Integrated testing indicated that power piston stroke is the fundamental FPSE parameter. It was found that engine hot side temperature, efficiency and power all responded to stroke variations at a given firing rate. Analyses of integrated tests also revealed the importance of displacer gas spring sizing on displacer/power piston phasing. Different sized displacer gas springs yielded substantial variations in test results and also indicated Proto 1 engine potential considerably in excess of 3 Kw. Overall, test analyses of the Proto 1 engine in the integrated test stand yielded an engine efficiency of 20 percent and a power output of 2.75 Kw, with the potential for higher efficiencies and power outputs with further engine tuning.

Combustor. Testing of the Proto 1 combustor continued during the previous reporting period as part of the integrated test series. Testing verified that pressure drop and emission requirements of the combustor were met when integrated with the engine.

Testing revealed the need for additional development on some combustor components. Ignition component reliability was impaired by oxide formation, the combustor to engine Kaowool packing seal exhibited excessive wear and failure of the burner element at the seam weld occurred. Examination of alternate designs and materials to address these problems were initiated.

Engine. Testing of the FPSE was accomplished on both the FPSE/facility loading device (helium pump) rig, and on the engine/compressor integrated test stand. Testing with the helium pump identified the need for seal rings. Initially carbon-graphite displacer bearing/seal rings and power piston bearing sleeves were used, but further testing revealed excessive

wearing and dusting, leading to potential regenerator contamination. Replacement rings and sleeves of graphite filled polyimide were then tried and exhibited significantly lower wear, sufficient for performance testing.

Integrated engine/compressor testing was conducted at thermal input levels from 20-64 KBTU/hr, bounce space charge pressures of 25 to 80 Bars and with various sized displacer gas springs. Initial integrated testing surfaced a startup transient condition where the compressor load buildup does not match the engine power output capability. A modulating valve was added to permit controlled leakage around the power piston assembly for control during testing, and an investigation for a product design fix was initiated. In addition, refinements and improvements to the venting and porting of the displacer and power piston were implemented to improve operation.

Considerable testing and supporting analysis was devoted to tuning the engine/compressor assembly during the previous reporting period. Three different displacer rods were fabricated and tested, providing different displacer gas spring characteristics and, hence, different displacer/power piston phase relationships. Tests on the two larger displacer rods indicated improved performance would be obtained for the smallest rod configuration, but the engine assembly could not be started with the smallest rod due to an insufficient gas spring pressure gradient during the starting transient. This result led to the start of an investigation into the use of a positive start mechanism for a high performance soft displacer gas spring configuration.

Compressor. Progress in development of the HAHP linear inertia compressor in the previous reporting period included completion of compressor component testing, test verification of the tubular suction and discharge coil lines and initiation of testing of the integrated Proto 1 engine/compressor configuration.

During both component and integrated testing, several design deficiencies were uncovered and corrected. Piston and liner material and lubrication problems were solved by a change in materials and a modification of the lubrication mechanism. The compressor gas spring

regulation system was successfully tested, but a change in system requirements necessitated testing with the gas spring volumes referenced to suction.

The suction and discharge tubular spring coil lines were endurance tested past the fatigue endurance limit of the material, thus verifying the design for Proto 1. However, it was found that excessive refrigerant superheat, caused by heat transfer from the helium bounce space to the coils, was causing a lower output than predicted. Subsequent testing was done with the coils insulated to minimize the superheat effect.

A significant result of the compressor testing was the determination that the compressor assembly weight was too high, causing a reduction in engine operating frequency, from 30 Hz to 25 Hz. It was concluded that extensive rework of the compressor design was not warranted for Proto 1; hence, testing was continued on the existing Proto 1 design with the intent to incorporate test result learning into the Proto 2 hardware.

Air Handler and Controls. Test and development effort on the air handler units and controls for Proto 1 was completed during previous reporting periods. These subsystems were ready to accept the engine/compressor unit for system level testing, planned for the July-December 1978 reporting period, as detailed in subsequent sections of this report.

Advanced Component Development. Most of the planned effort for the Advanced Component Development task, except for the Proto 1 endurance test, was completed in the previous reporting period.

Several engine design improvements were examined, including an improved displacer gas-spring configuration, an engine self-starting mechanism, and a magnetic engine to compressor drive concept. The improved displacer gas spring configuration, designed to reduce the overall size of the engine, will be incorporated into the Proto 2 design. The self-starting mechanism and the magnetic drive designs were planned for development as part of an add-on accelerated development task to the program scheduled to start in the second half of 1978.

A test program for FPSE bearing materials was also undertaken in the previous reporting period. Candidate materials for the power piston and displacer bearings were fabricated and planned for accelerated wear testing under simulated FPSE operating conditions in July of 1978. Results of these tests are presented later in this report.

The advanced combustor development effort also progressed substantially in the January-June 1978 period. A combustor configuration featuring radial inlet and exit ducts and other features designed to improve overall flow distribution, structural support and performance was fabricated and assembly for testing started. Tests of the preheater alone showed improved flow distribution. Testing of the complete advanced combustor was scheduled for the second half of 1978 and is presented later in this report.

Further investigation of low cost ceramic burner elements for the combustor continued. Several ceramic burner elements were fabricated and tested during this reporting period. Results of this work indicated that future development attention proposed as part of the add-on accelerated development program for the HAHP, should focus on foam and cloth type ceramic materials, since these types provided superior structural integrity and control of porosity during fabrication.

1.2 PROGRESS SUMMARY

Program effort during the sixth 6-month period of Phase II was concentrated on system level testing of the Proto 1 HAHP hardware and start of the Proto 2 design. Table 1-1 summarizes the major accomplishments during the June-December 1978 reporting period. Detailed descriptions of program progress on each subsystem and the system design are presented in following sections of this report.

Table 1-1. Development Status

SYSTEM/SUBSYSTEM	STATUS
Prototype 1	
Development	• Materials Development Completed • Advanced Combustor Development Completed • Experimental Proto 2 Component Development Initiated
System Testing	• Testing Completed • Matching Parameters Established • Design Improvements Identified
Prototype 2	
System	• Requirements Defined • Performance Established • Major Tradeoffs Completed
Combustor	• Layouts Completed • Detail Design Initiated
Engine	• Preliminary Layouts Completed • Detail Design Initiated
Compressor	• Preliminary Layouts Completed • Detailed Design Initiated
Controls	• Operating and Safety Logic Established • Component Interfaces Established
Indoor Air Handler and Outdoor Unit	• Preliminary Layouts Completed • Appearance Design Initiated

SECTION 2

PROTOTYPE 1 SYSTEM TEST

SECTION 2

PROTOTYPE 1 SYSTEM TEST

2.1 INTRODUCTION

At the end of the last reporting period, the engine/compressor integrated testing was completed. Engine performance mapping at various firing rates and load conditions was characterized. System level testing was initiated in June of 1978 and completed by the end of this reporting period.

The instrumentation and the operation of the complete HAHP system and associated facility was checked out. Testing was conducted in both cooling and heating operating modes. System matching, primarily engine and compressor load balancing, was evaluated extensively. Testing with three different weights of compressor piston identified the optimum combination of design parameters for the Proto 1 configuration. This allowed the engine to operate at the best efficiency level obtained from the previous integrated testing. As a result of the extensive testing, matching between the free piston Stirling engine and linear compressor was fully characterized and the influencing parameters identified. These accomplishments will provide an empirical data base for Proto 2 development.

Energy balance computations from the system test results identified a need to incorporate a positive seal on the displacer to improve engine performance. Testing in this reporting period achieved an engine efficiency in the low 20% range. The energy balance analysis indicated several areas of potential improvements and refinements which will lead to an engine efficiency level exceeding 30%.

Overall results of the system test indicated that COP and capacities in both cooling and heating modes can meet product goals.

2.2 TEST DESCRIPTION

2.2.1 SUMMARY

Following completion of both the combustor/engine/compressor integrated tests and the component testing of the air handler units, system level testing was initiated. The calibrated, electric driven R22 compressor was removed from the outdoor unit air handler. In its place, the integrated test hardware was installed in the engine compartment. The Proto 1 heat pump system was instrumented and the air, fuel, and exhaust subsystems installed. The required combustor/engine controls and diagnostic instrumentation were assembled and installed in the environmental chamber test consoles. The entire Proto 1 heat pump system was then checked out and system level testing was conducted in both cooling and heating modes of operation.

2.2.2 HEAT PUMP EQUIPMENT

The combustor/engine/compressor assembly and the spring mounted support structure were removed from the integrated test facility (Figure 2-1) and subsequently installed in the outdoor unit of the air handlers. Figure 2-2 depicts the hardware arrangement of the Proto 1 outdoor unit. The Proto 1 outdoor unit was centrally located within the environmental testing chamber. Combustor/engine control and diagnostic equipment systems from the integrated tests were duplicated and the control consoles positioned adjacent to the door of the environmental chamber. Figure 2-3 illustrates an overall view of the Proto 1 heat pump, test facility and the control consoles. Interconnecting cables completed the sensors/processing circuitry with the dynamic data recording system, which is adjacent to the integrated test stand in an adjoining test area.

2.2.3 TEST FACILITY

The test facility consists of two integrated circulating air loops plus appropriate manual and automatic controls such that the environmental conditions of the air entering both the indoor and outdoor units can be established and maintained at pre-selected conditions. The test loops are shown schematically in Figures 2-4 and 2-5. A detailed description of each test facility may be found in previous semi-annual reports.

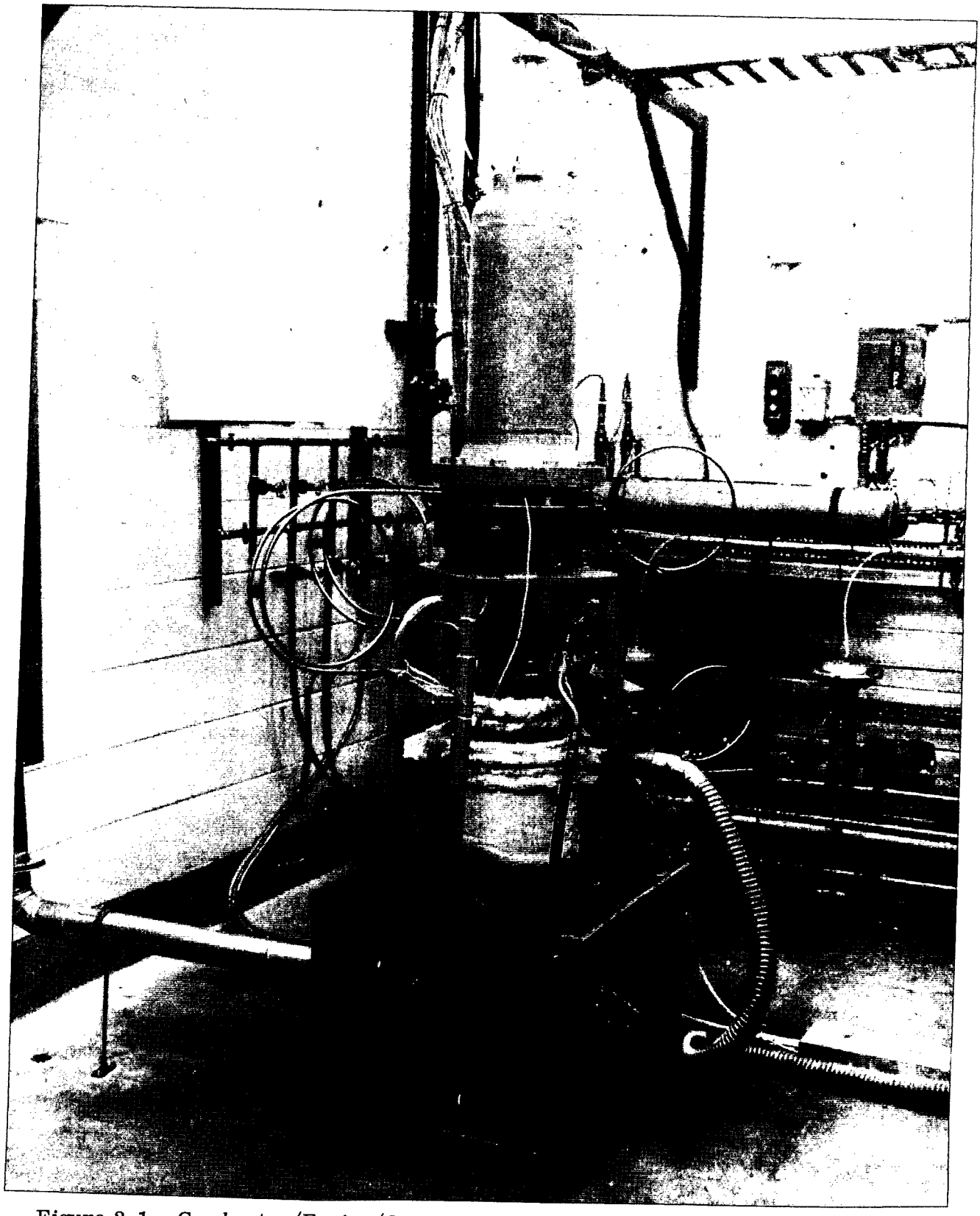

Figure 2-1. Combustor/Engine/Compressor Assembly Mounted in Test Facility

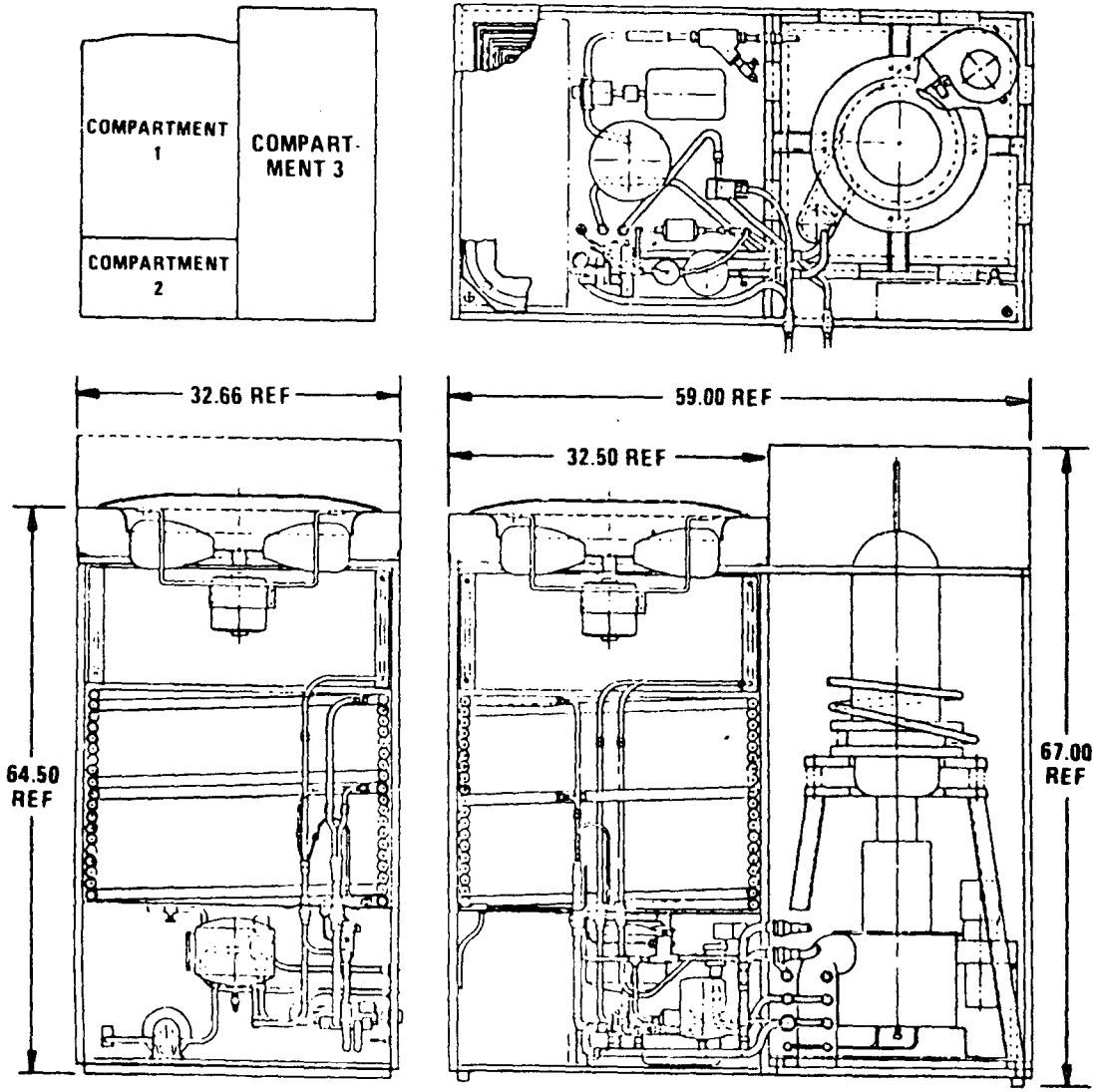

Figure 2-2. Proto 1 Outdoor Unit Hardware Arrangement

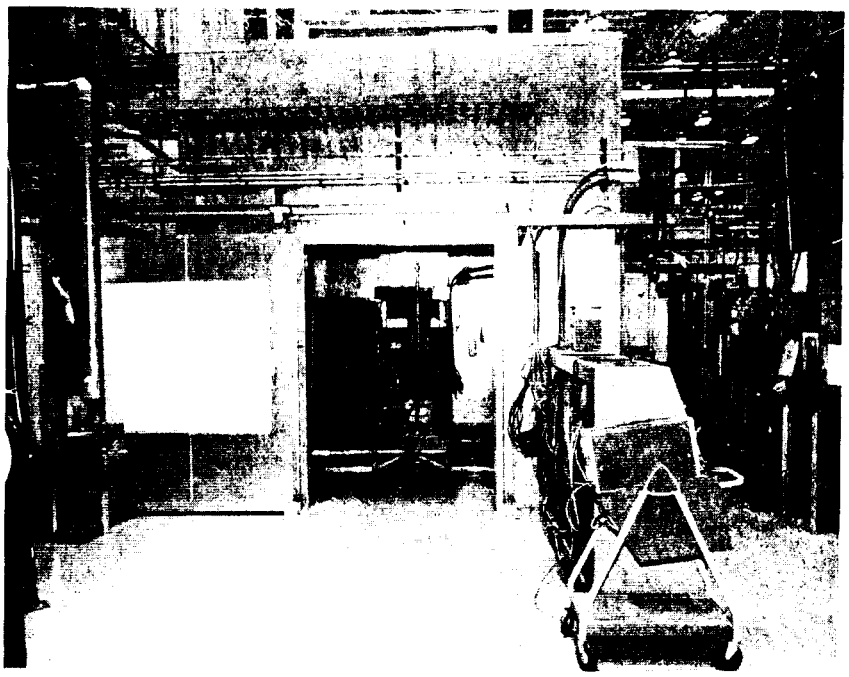

Figure 2-3. Gas Heat Pump Prototype Test Facility

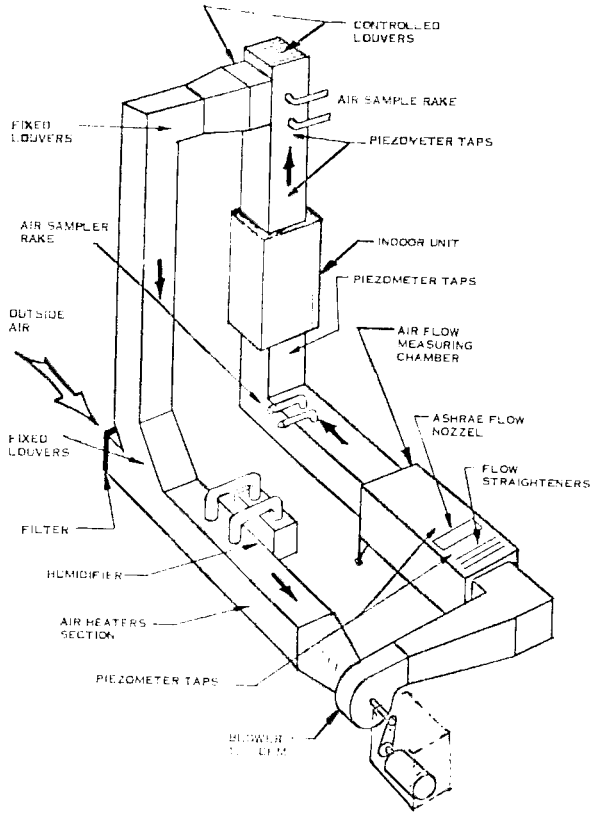

Figure 2-4. Indoor Unit Test Facility

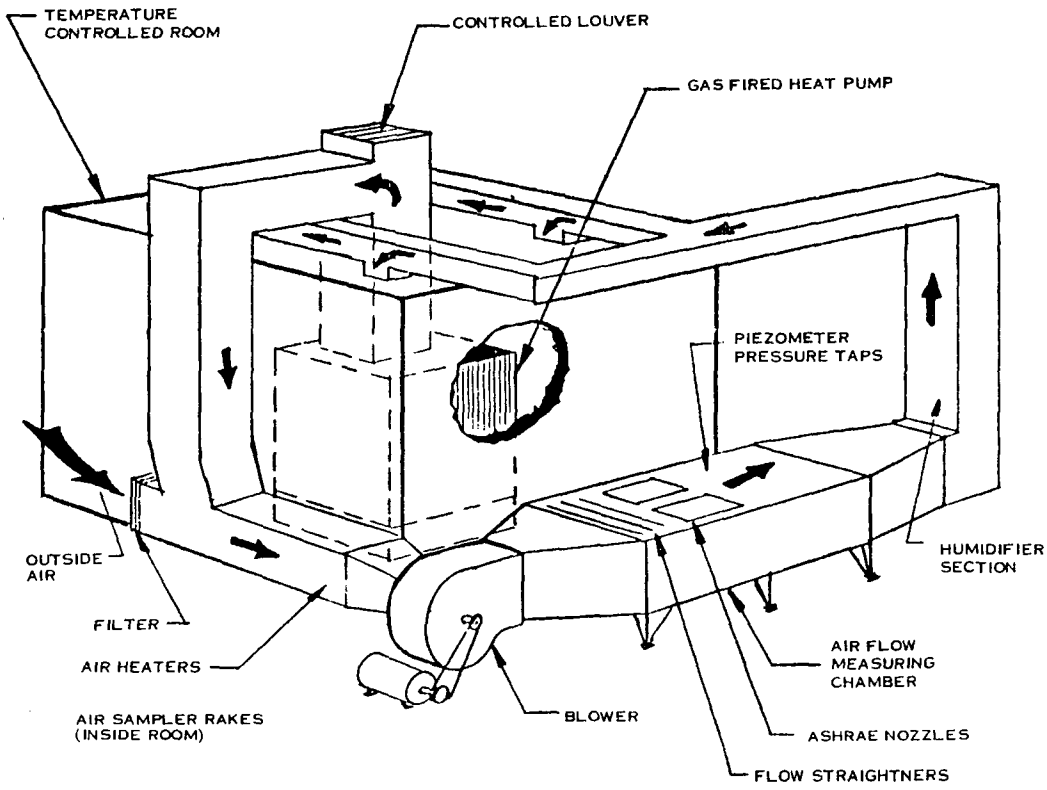

Figure 2-5. Outdoor Unit Test Facility

During the checkout portion of the system testing, it was determined that additional low temperature capability was necessary to extend the range of heating mode testing. A five (5) ton heat pump was added to the test facility in a by-pass leg of the return air ducting (Figure 2-5). With the incorporation of this facility heat pump, heating mode test conditions could be maintained at sub-freezing temperatures.

2.2.4 INSTRUMENTATION

The quantity of combustor/engine/compressor instrumentation on the Proto 1 system test was identical to that used on the integrated test. Readout of the pressure transducers and the displacement sensors were recorded on the FM recorder system. Thermocouples were monitored on a paper tape data logger system.

At the completion of the air handler component tests, the performance levels of both air handler units were fully characterized. The full set of instrumentation required for the air

handler component tests was unecessary for system level evaluations; therefore, the quantity of monitored sensors was reduced. Figure 2-6 is the system instrumentation schematic and lists all sensors and controls other than those contained within the combustor/engine/compressor assembly.

2.3 SYSTEMS OPERATIONS

System level testing was performed both on and off ARI Standard Cooling and Heating Mode rating conditions. Figures 2-7 and 2-8 illustrate the Cooling and Heating Mode Schematics for the 95°F condition days, respectively. Non-standard rating day conditions at 75°F (Cooling) and 0°F (Heating) are depicted in Figures 2-9 and 2-10. Testing was performed in the cooling mode with outdoor temperatures ranging from 65°F to 100°F. Heating mode tests were conducted down to sub-freezing temperatures in the 25°F - 30°F range. Facility limitations prevented testing at lower temperatures. Various outdoor ambient conditions were evaluated. However, the majority of the tests were performed at the 95°F (Cooling) and 45°F (Heating) standard rating day conditions.

Most of the system level testing was performed following a flexible procedure. The indoor and outdoor facility loops were activated and the environmental conditions established. The facility blowers were trimmed until the air handler fans and/or blowers were pumping against the required pressure levels. Controls for both the humidistats and heater and/or cooling units were placed on automatic at the desired operating set point.

The combustor was fired at a predetermined firing level and the Free Piston Stirling Engine (FPSE) was started. The engine charge pressure level was then adjusted and, if necessary, the combustor firing level was trimmed to the desired operational value. The compressor pumped the refrigerant (R22) at the pressure ratio that was established by the temperatures of the condenser and evaporators. The mass flow rate was determined by the throttle control valve as a function of the superheat level at the outlet of the evaporative heat exchanger. Tests were also conducted with a fully flooded evaporator to evaluate the relative performance.

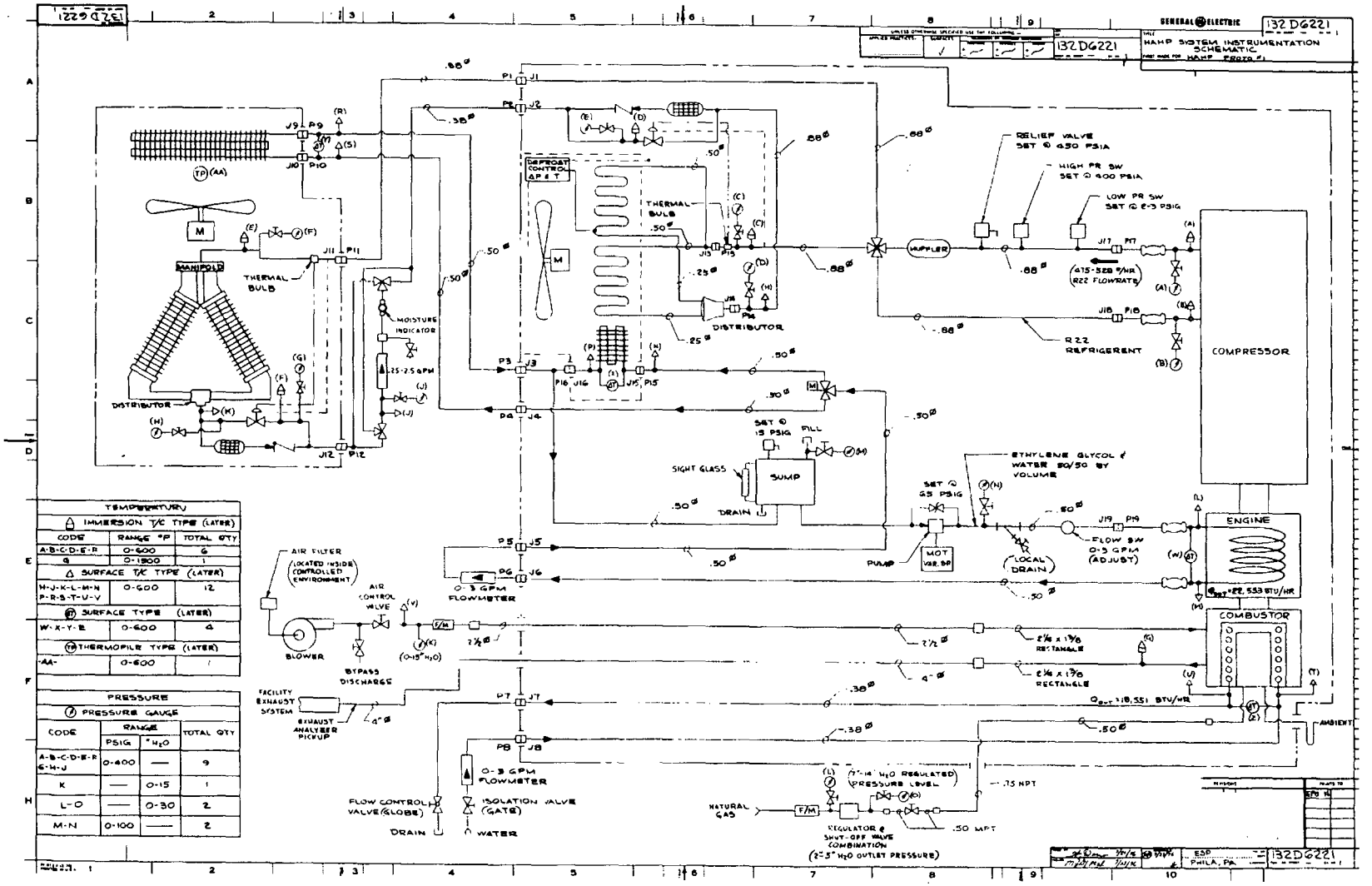

Figure 2-6. HAHP System Instrumentation Schematic

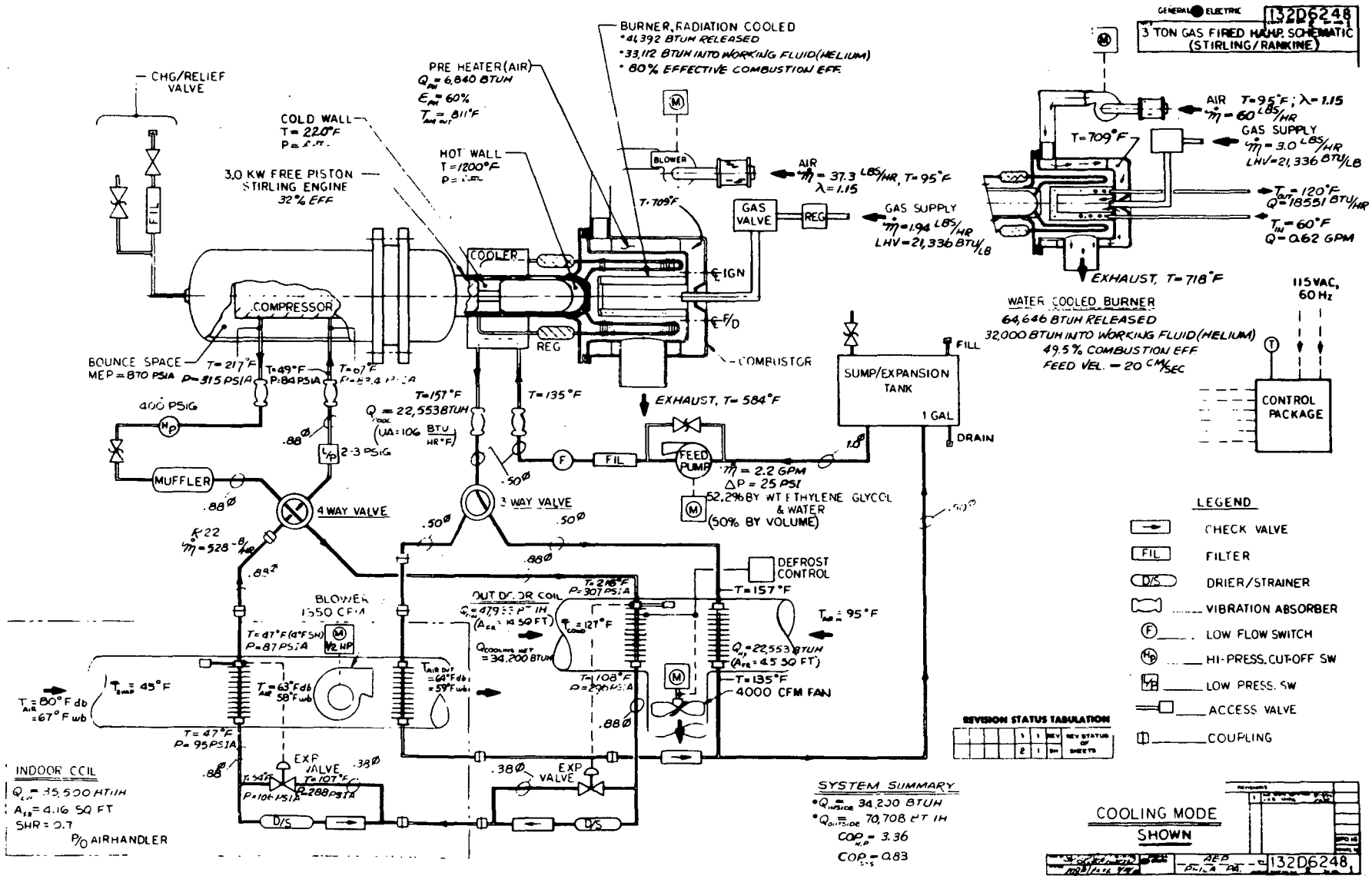

Figure 2-7. System Operation Schematic for Cooling Mode (95°F Day)

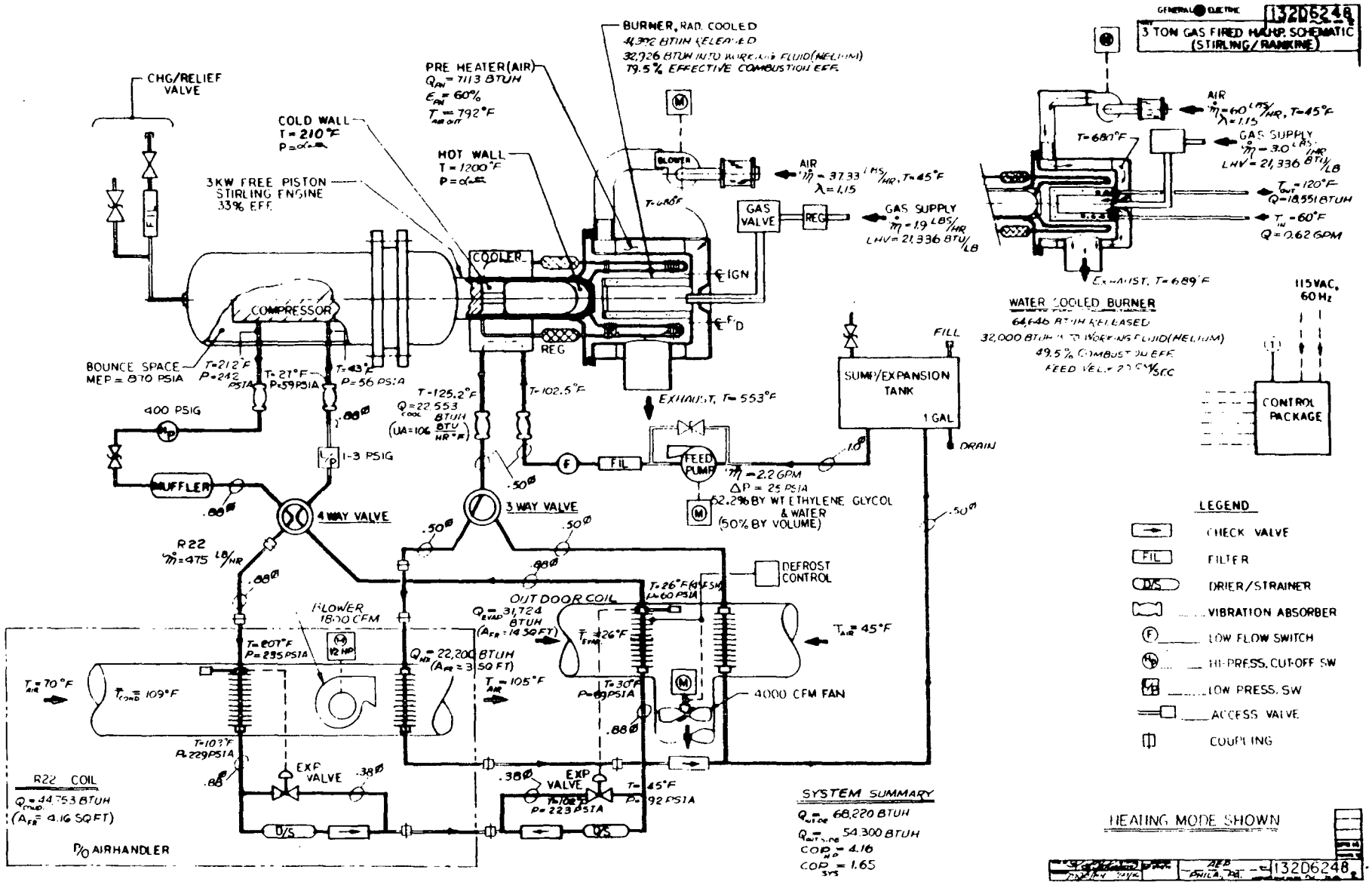

Figure 2-8. System Operation Schematic for Heating Mode (45°F Day)

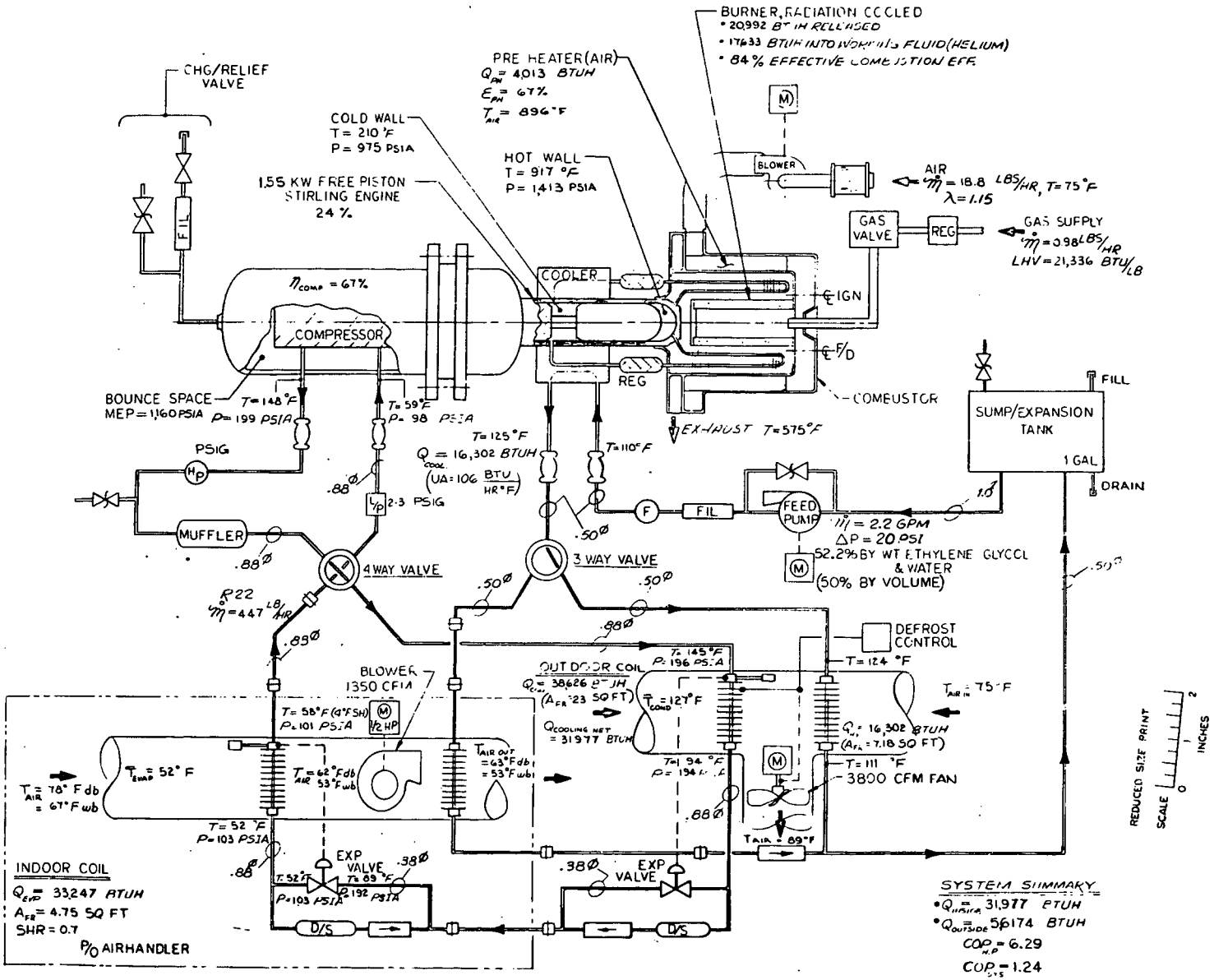

Figure 2-9. 75°F Design Point Low Firing Rate Operating Mode (Cooling Mode)

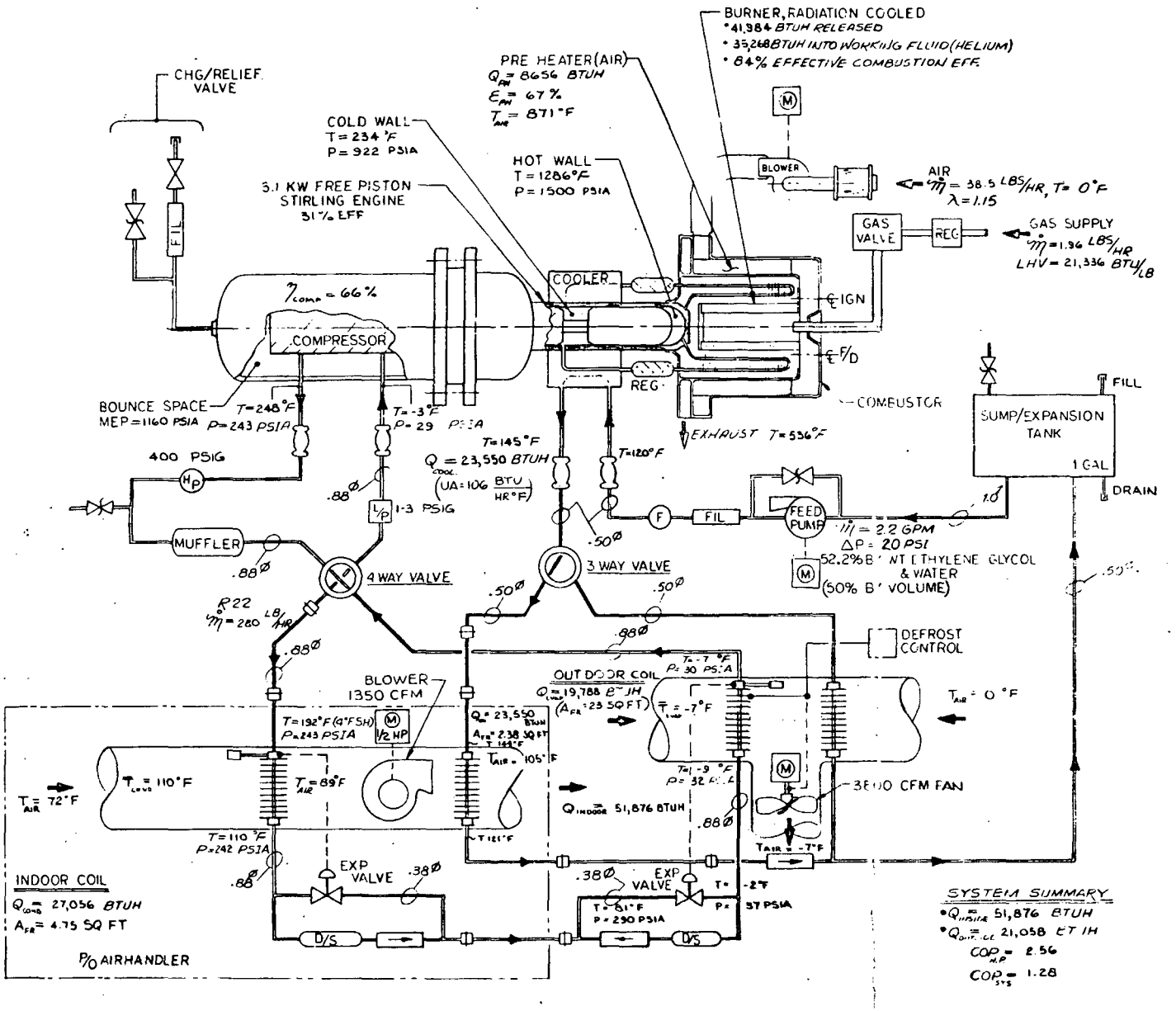

Figure 2-10. 0°F Design Point High Firing Rate Operating Mode (Heating Mode)

Data was recorded during both transient and steady-state conditions. This included temperature, pressure and mass flow measurements as well as dynamic data from sensors within the combustor/engine/compressor assembly. Data was recorded to determine performance characteristics at various engine charge pressures, combustion firing rates, compressor pressure ratios and refrigerant mass flow rate levels.

2.4 SYSTEM MATCHING

The sensitivity of a free piston Stirling engine operation to its load imposes a stringent requirement on proper matching among all sub-systems in a heat activated heat pump system. To achieve a high engine efficiency, the linear compressor natural frequency must be appropriately matched with the engine operating frequency. In the engine/compressor integrated test stand, considerable flexibility existed to adjust the compressor suction and discharge pressures, permitting the engine to operate at the 20-26% efficiency level. In the system tests, the engine/compressor subsystem was coupled with the heat pump system. The compressor suction and discharge pressure became primarily determined by the air side heat exchanger temperatures. Consequently, proper matching of the heat pump system had to be accomplished through hardware design modifications.

The simplest way to adjust system matching was to adjust the compressor piston weight in order to better match the compressor natural frequency with the engine operating frequency. Three different compressor pistons were designed (Figure 2-11) and extensively tested both in compressor component testing and in system level testing. The effect of compressor piston weight, operating frequency and discharge pressure on compressor performance was thereby determined by test with the results shown in Figure 2-12.

The engine/compressor matching characteristics are illustrated in the coupled performance maps of the engine and compressor shown in Figure 2-13. The first, second and the fourth quadrants show the compressor performance and operating characteristics. The third quadrant is the engine performance map obtained from the integrated tests. The system operating point for a combined engine and compressor with a given heat pump system is determined by the match point between the power delivered by the engine and the power required by the compressor.

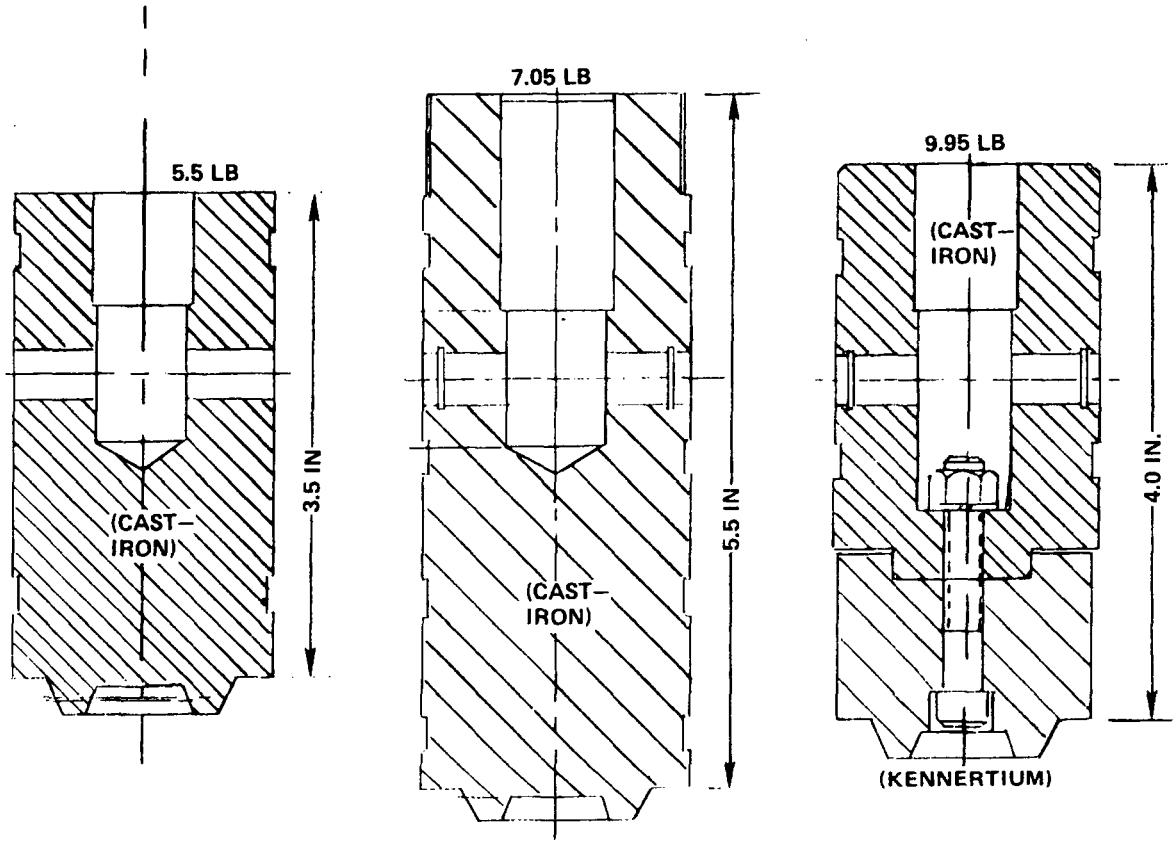

Figure 2-11. Compressor Piston Designs Tested

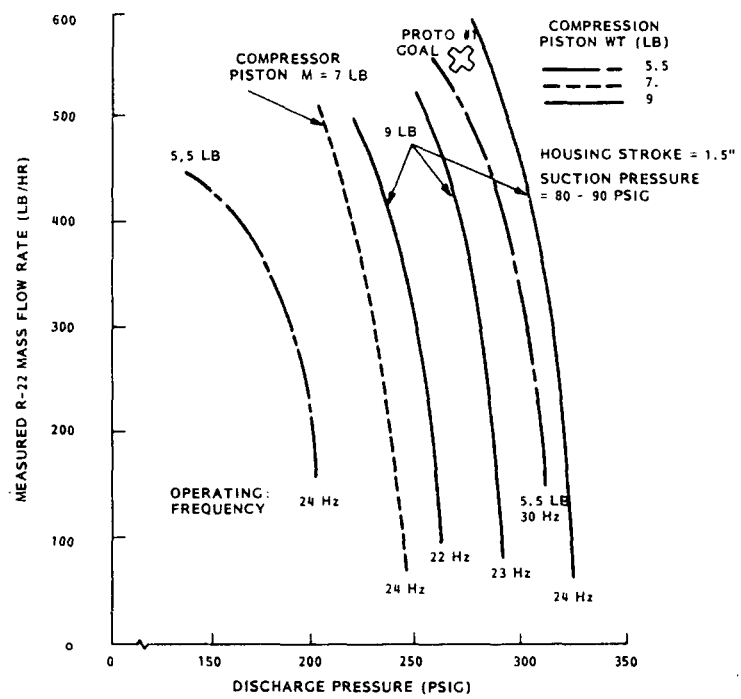

Figure 2-12. Effect of Compressor Piston Mass on the Compressor Performance at Various Operating Frequency and Discharge Pressure Values

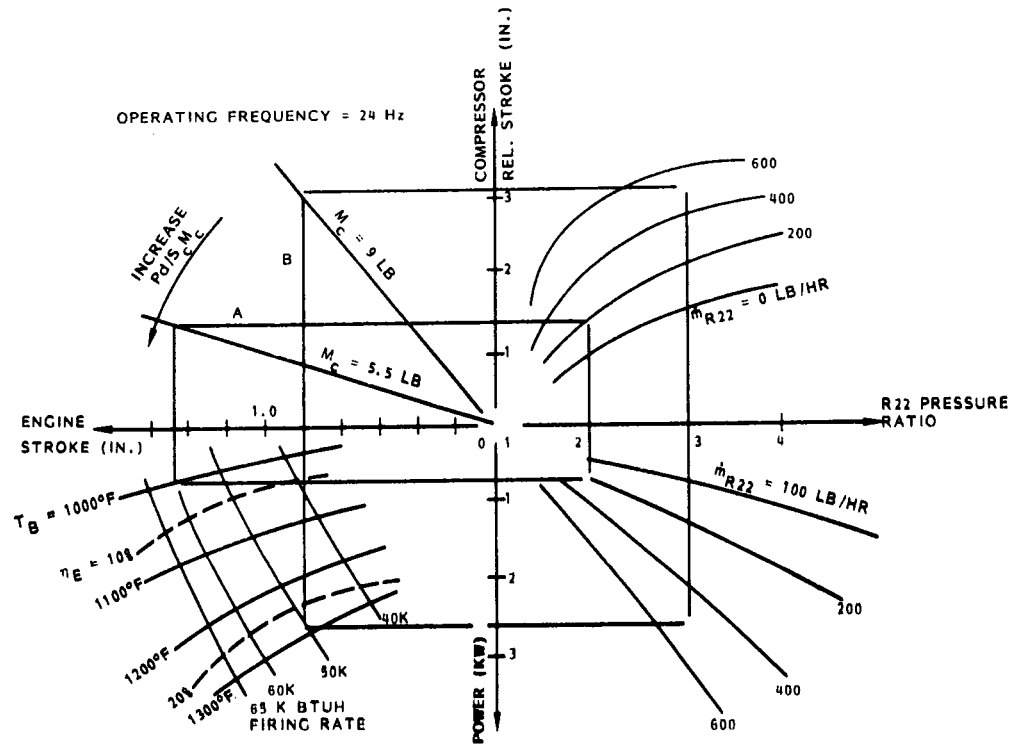

Figure 2-13. System Matching-Prototype 1 Matching Characteristics

The system air handler requires that, at 95° ambient temperature design point, the freon pressure ratio between the condenser and the evaporator should be about 3 (suction pressure = 90 psia and discharge pressure = 275 psia) with a flow rate of 570 lb/hr for a 3 ton cooling capacity. To satisfy this requirement, the initial compressor piston (5. 5 lb piston mass) would require 1. 7" stroke, 30Hz engine. However, due to the engine weight and operating limitations, the engine operates at 24Hz, which is significantly below the compressor natural frequency of 36Hz with a 5. 5. lb compressor piston. At 24Hz operating frequency, a larger engine stroke would be required with a 5. 5 lb compressor piston than a heavier one to generate an identical compressor relative stroke (compressor compressing ratio). Therefore, for a 5. 5 lb compressor mass, an equivalent operating condition is identified as that of closed lines A indicated in Figure 2-13. The requirement of a large engine stroke (1. 7") results in a low heater head temperature and hence, a low engine efficiency, low freon flow and reduced compressor pressure ratio.

With a heavier compressor piston, such as a 9 lb mass, Figure 2-13 shows that the slope of the curve in the third quadrant becomes steeper. A new operating condition is shown by the closed lines B. A smaller engine stroke is required due to better system matching. This results in a higher heater head temperature, better engine efficiency, and higher freon flow at a higher pressure ratio.

Figure 2-14 shows the engine performance test data using three different compressor weights superimposed on the engine performance map. The results confirm the matching analysis discussed above. Low engine efficiencies were obtained using a 5.5 lb compressor piston. for the 7 lb compressor piston, engine piston strokes were reduced and resulted in higher tube temperature and improved engine efficiency. Further improvement in engine efficiency was realized using a 9 lb compressor piston. However, the improvement was not as much as predicted due to a reduction of operating frequency from 24 to 22Hz with the 9 lb compressor piston. This effect is also illustrated in Figure 2-12, indicating that a significant degradation of compressor performance occurs when operating frequency is reduced.

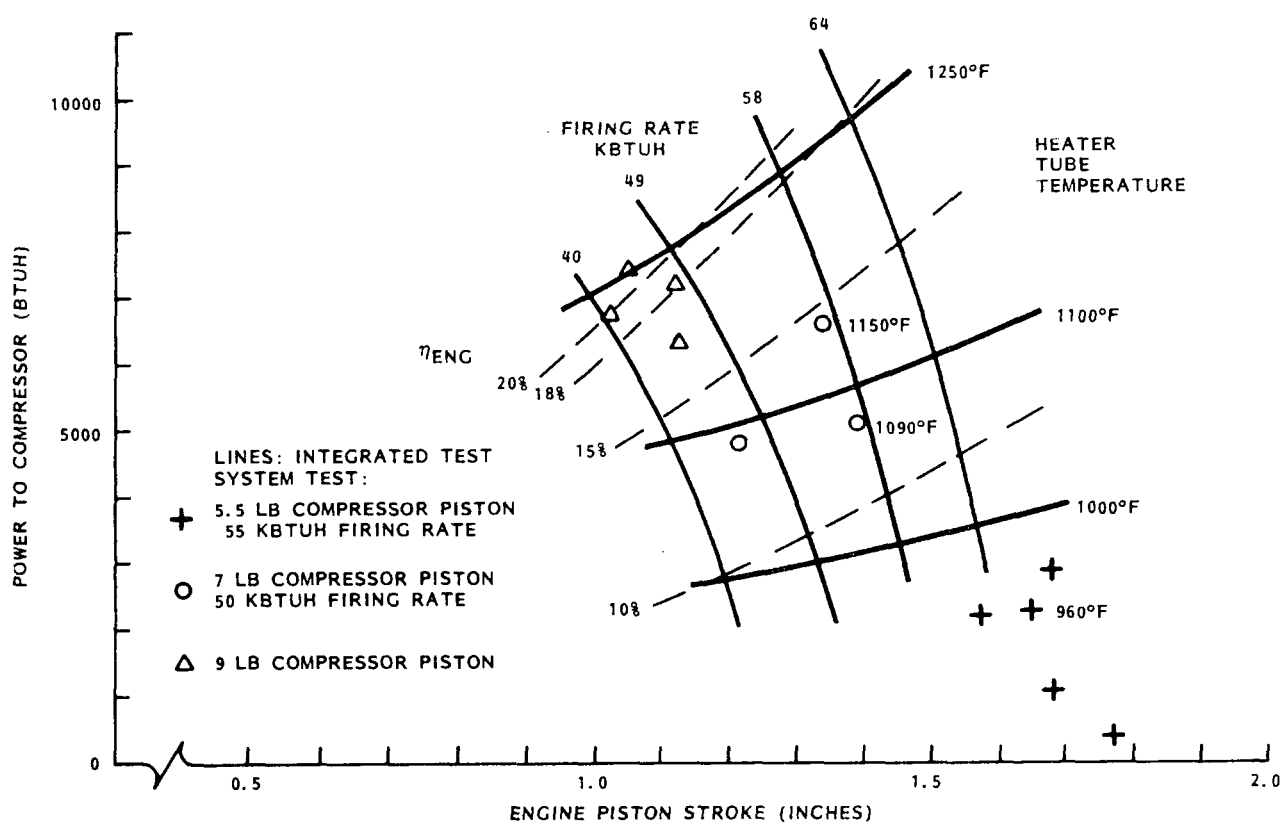

Figure 2-14. System Test Using Various Compressor Piston Weights

Another way to improve the system matching is to increase the engine operating frequency closer to the compressor natural frequency. A higher operating frequency would require a shorter engine piston stroke for the same power output. It would also permit the use of a lighter compressor. To increase the Prototype 1 engine operating frequency, however, would require a substantial re-design of key engine parameters, such as bore size, dead volume and piston weight. It was decided that the existing Proto 1 hardware would be fully tested as is, and that provision will be included in the Proto 2 engine design to fine tune engine frequency. This will be accomplished by use of a second gas spring on the power piston assembly.

Results of the system tests and test analyses established the importance of matching the heat pump system components and quantified the sensitivity of the controlling hardware and operating parameters. In addition, effective approaches for tuning the components were developed and the foundation for design of the Proto 2 heat pump components were established. The system tests thus successfully fulfilled an important goal of the HAHP development program.

2.5 ENERGY BALANCE

2.5.1 REDUCTION OF HEAT LOSSES

The energy balance obtained from early integrated and system tests revealed that significant heat losses occurred in the engine. During the last reporting period it was found that working fluid leakage across the power piston into the bounce space resulted in extensive losses. This loss was corrected by adding positive piston seal rings on the power piston sleeve.

Additional analyses of test data in the current reporting period showed that a higher than anticipated firing rate was still required to reach the desired hot side operating temperature. Several post test inspections also revealed a light film of dust on the surface of the displacer. Both observations indicated the possibility of significant losses due to leakage of working fluid around the displacer. A displacer ring was incorporated into the engine as illustrated in Figure 2-15 and testing was resumed. Test results shown in Figure 2-16 indicated

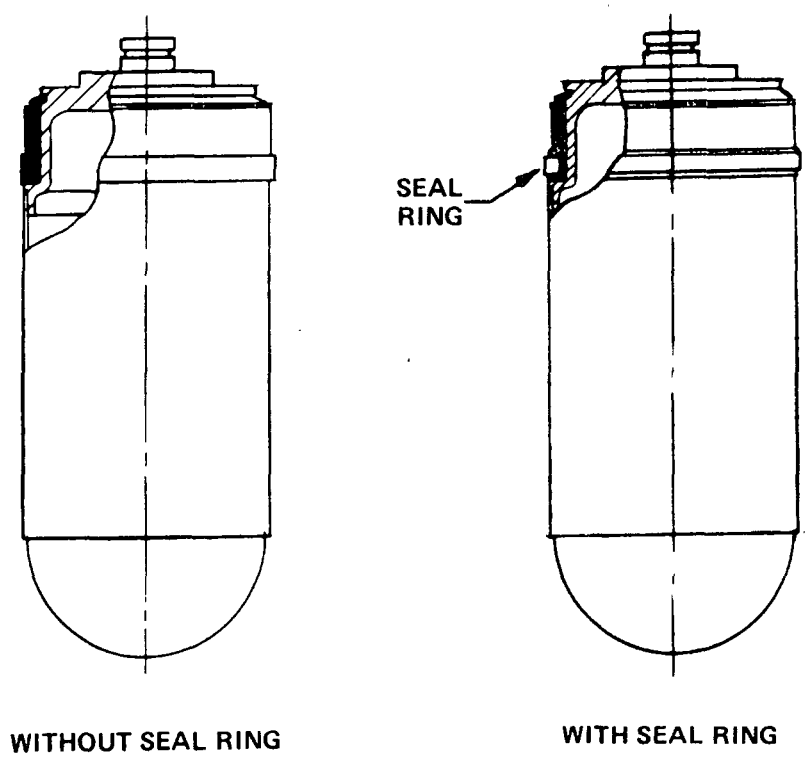

Figure 2-15. Engine Displacer Seal Ring

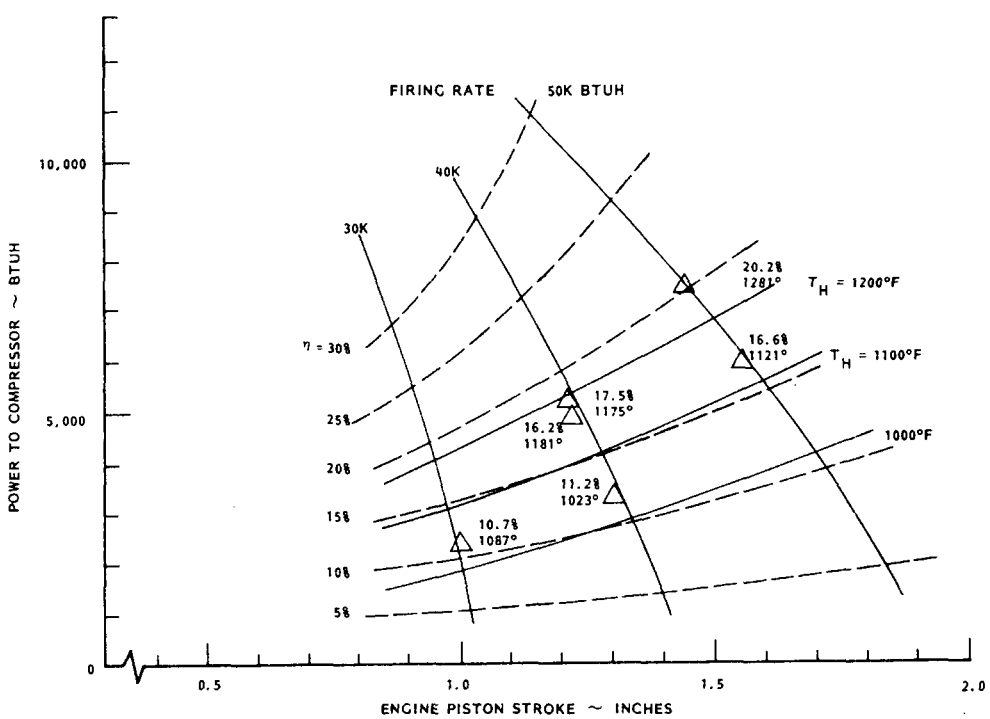

Figure 2-16. Performance Map with 9 lb Compressor Piston and Displacer Ring Seal

improved performance. A 20% engine efficiency was obtained at a hot side temperature of 1280°F. The improvement due to the displacer ring is further illustrated in Figure 2-17 which shows the increase in engine efficiency as a function of firing rate.

With the use of the displacer ring, the heat balance of the engine was in line with previous predictions. Figure 2-18 shows the heat input and the heat output of the engine as tested with and without the displacer ring and a comparison with the pre-test predictions.

2.5.2 ENERGY BALANCE ANALYSIS

After the working fluid leakage across the displacer and the power piston were minimized, the engine heat balance was re-examined. Based on test results, areas of energy loss due to conduction, damping and other sources of leakage were identified, and compared with the earlier prediction. The first two columns of Table 2-1 tabulate the energy breakdown comparison of a typical run between the prediction and the test results.

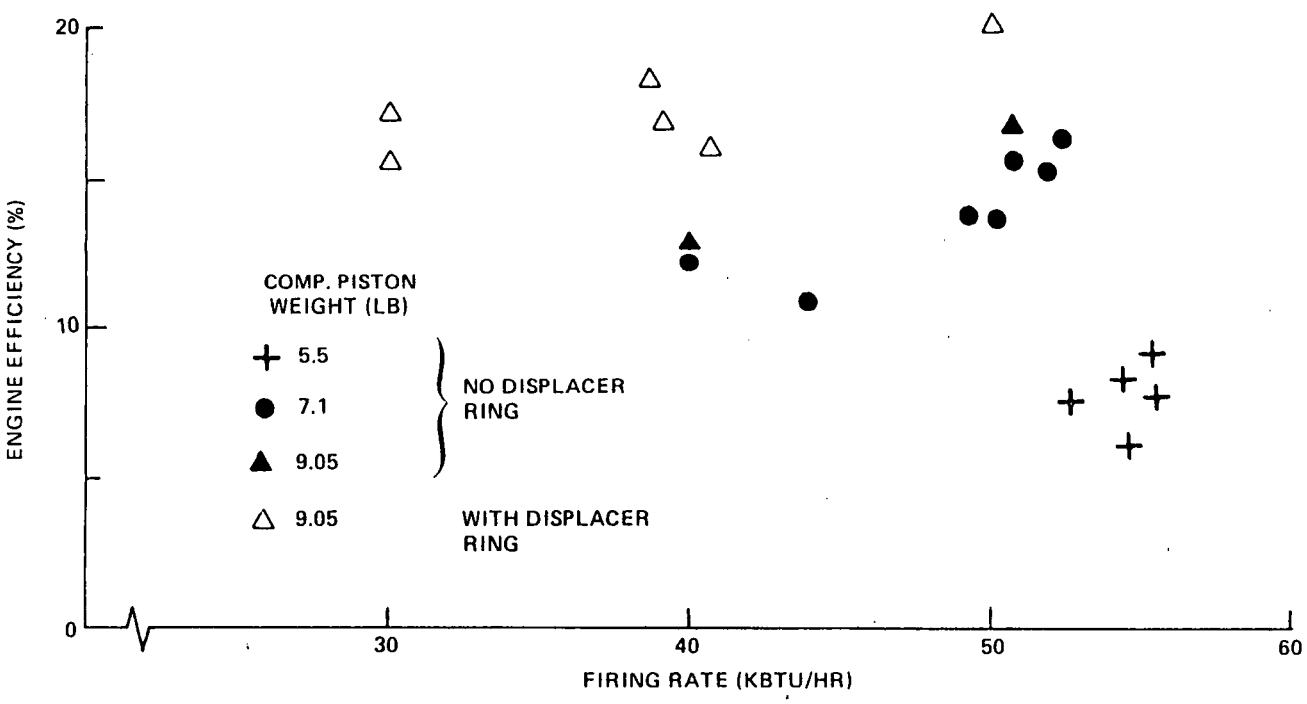

Figure 2-17. Effect of Displacer Ring on Engine Performance

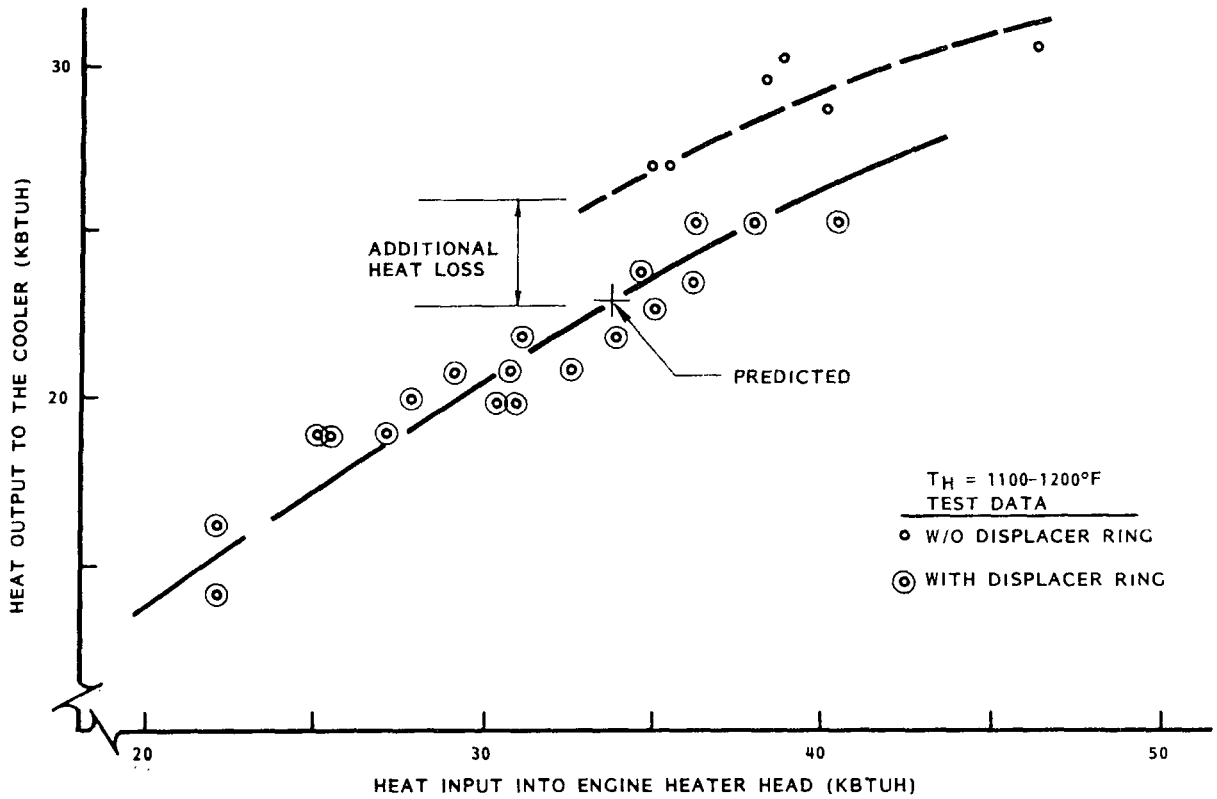

Figure 2-18. System Test-Engine Heat Input and Output

The tested combustor performance agrees very well with that of predictions. An 82% combustor efficiency was achieved. Good agreement on engine heat input and the heat output to the cooler was also obtained. This indicates that the predicted energy/heat losses in various engine components as tabulated in the first column of Table 2-1 should be very close to those tested. A significant heat loss was experienced in the regenerators as predicted, due to the thick wall configuration purposely designed to provide for matrix interchangeability.

However, tested engine power output was significantly lower than predicted, indicating a 20% engine efficiency as compared to the 30% predicted. This discrepancy was due mainly to the flow leakage through the power piston centering port mechanism and heat conduction across the aluminum piston.

Table 2-1. Stirling Engine Energy Balance

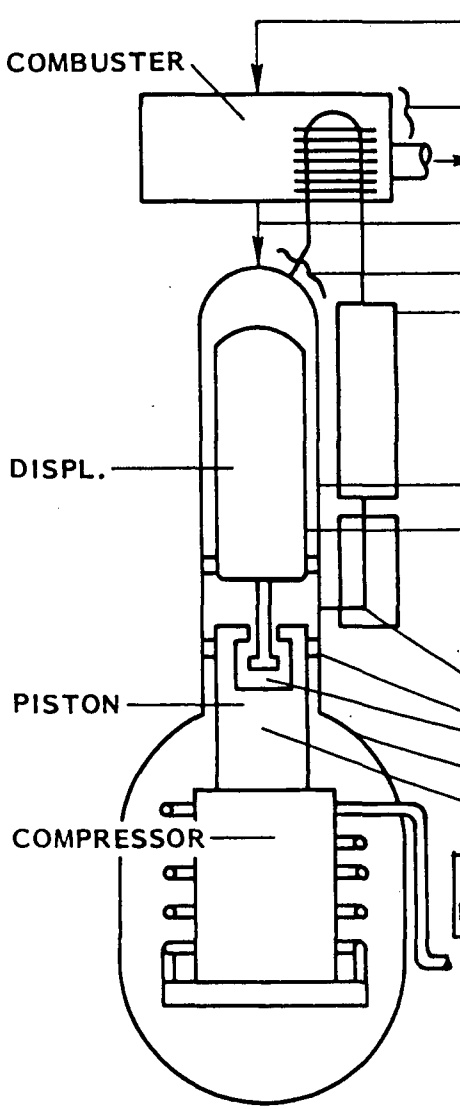

	UNITS IN WATTS				
	PREDICTED		TEST	PROJECTED	
TOTAL HEAT INPUT		12110	12922		12110
INSULATION LOSS		328	391		392
EXHAUST		1884	1935		1873
INPUT TO ENGINE		9898	10596		9845
INSULATION LOSS		55	363		243
REGENERATOR LOSSES					
A) AXIAL WALL COND	276			180	
B) AXIAL MATRIX COND	27	1513		27	517
C) RADIAL COND	910			310	
D) FLOW LEAK	300			0	
CYLINDER WALL COND		69			69
DISPLACER LOSSES					
CONDUCTION	11			11	
RADIATION	41	203		41	203
SHUTTLING	151			151	
HEAT TO COOLER		6680	6825		5662
FLOW LEAKAGE			821		293
GAS SPRING LOSS		163	163		163
HEAT CONDUCTION			280		205
ENGINE POWER		3000	2144		3287
ENGINE CYCLE EFFICIENCY		30%	20%		32%

2.6 PROTO 1 SYSTEM PERFORMANCE AND PERFORMANCE POTENTIAL

Lower than predicted engine efficiency, coupled with excessive superheat in the compressor suction lines resulted in overall system performance lower than the goals established for the Proto 1 unit. The system capacity and COP measured from system testing are shown in Figures 2-19 and 2-20, respectively, for a constant 40 KBTUH firing rate. As shown marked improvements have been accomplished on the Proto 1 system performance. Potential improvements of the Stirling engine, as discussed in the previous section, would enable the Proto 1 system to meet the design goals.

Currently, the Proto 1 system performs at the margin of the acceptable operating cost savings range indicated in Figure 2-21. Quite acceptable payback values can be accomplished with further achievable improvements in the engine and compressor hardware configurations.

By designing a thin-wall regenerator housing, heat loss across the regenerator can be substantially reduced. With additional reductions in flow leakage across the piston centering

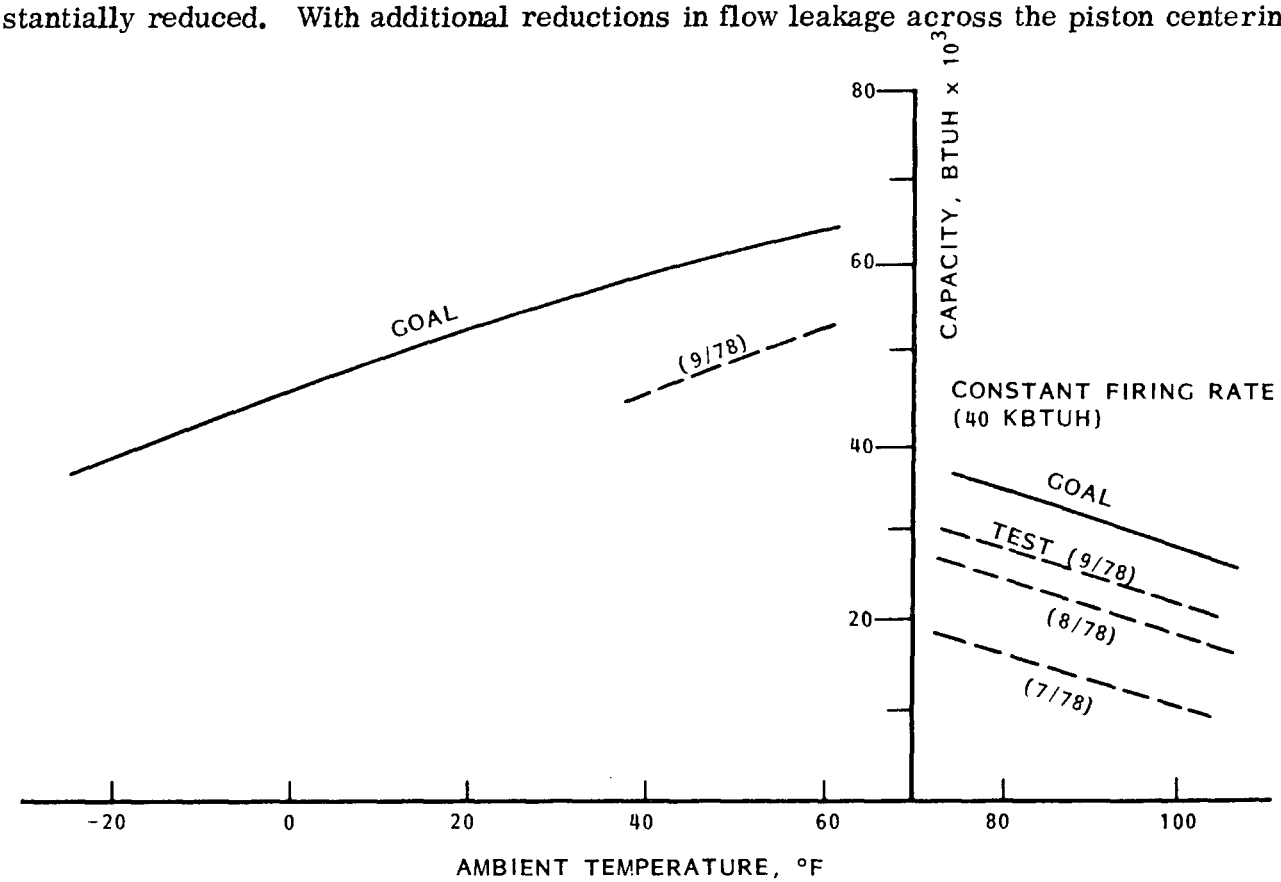

Figure 2-19. Present Status of System Capacity at a Constant Firing Rate

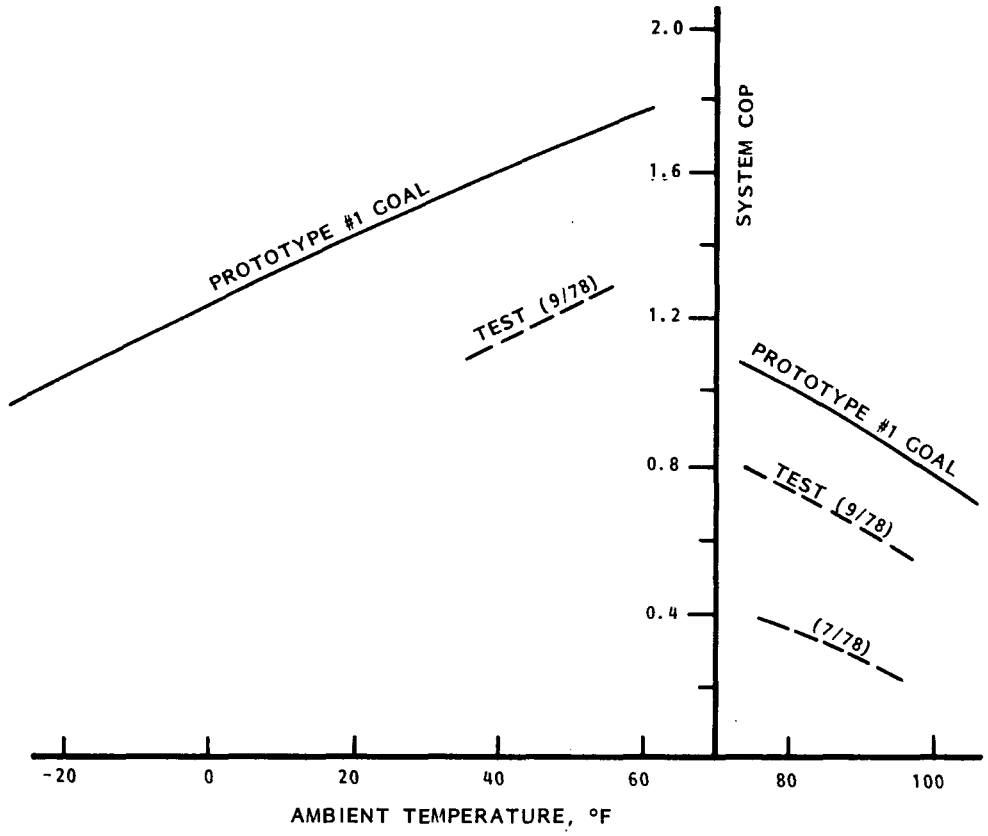

Figure 2-20. Present Status of System COP at a Constant Firing Rate

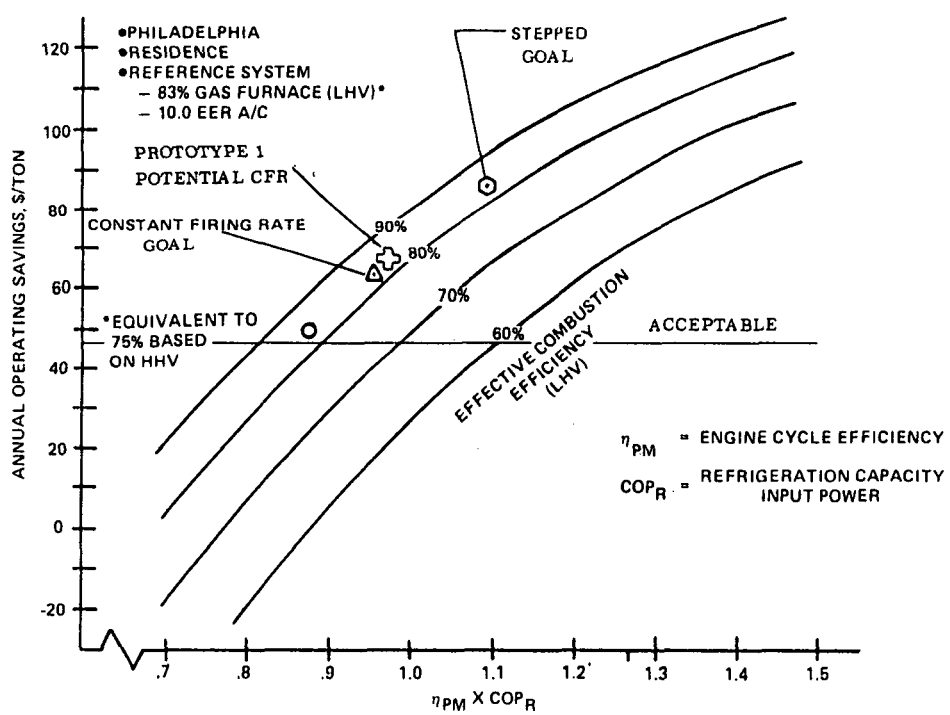

Figure 2-21. Operating Cost Savings for HAHP

port mechanism and heat conduction to the bounce space, a Proto 1 engine efficiency of over 30% can be potentially realized. The breakdown of the improved Proto 1 engine energy levels is shown in the last column of Table 2-1.

The Proto 1 engine performance improvements accomplished so far, and the potential improvements are chronologically shown in Figure 2-22. A redesigned Proto 1 regenerator will be tested in the Proto I engine in the next reporting period.

The Proto 1 engine will also be modified to increase its operating frequency for better matching with the compressor. This will be accomplished by adding a second gas-spring for the engine power piston. The second gas spring will be located in the bounce space environment. This permits easy access for fine-tuning the engine operating frequency and greatly increases the flexibility for system matching with the compressor load. In addition, the vent-ports built into the Proto 1 piston sleeve for piston motion centering will be relocated to the second gas spring piston. As a result, the working fluid leakage through the vent ports can be eliminated and the engine efficiency can be significantly improved.

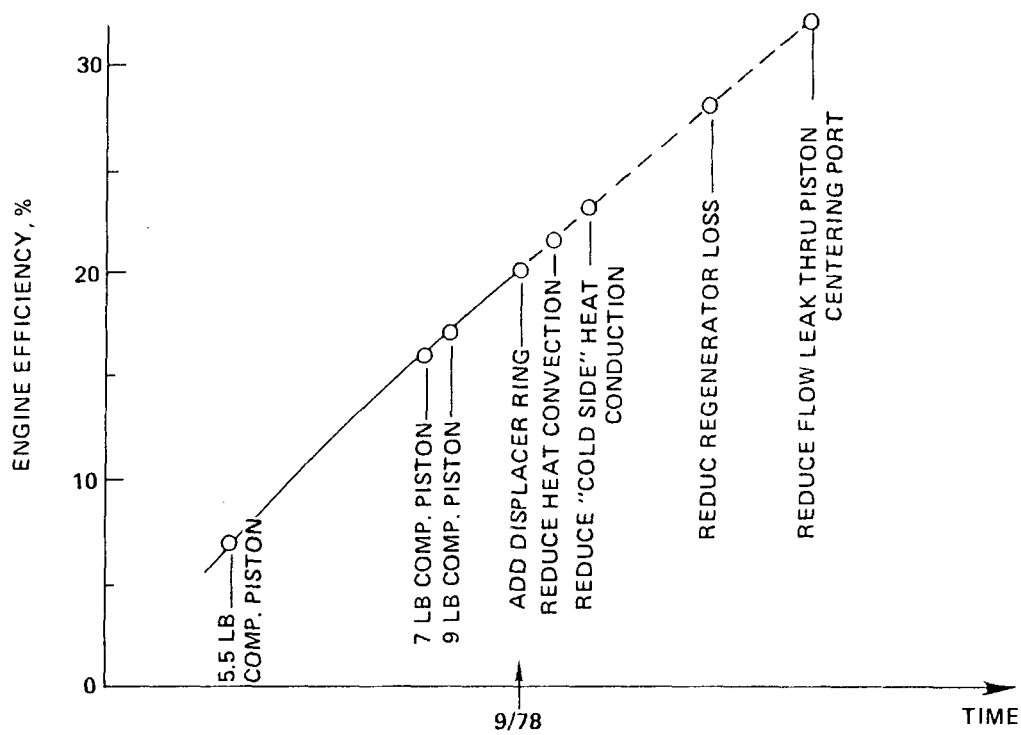

Figure 2-22. Stirling Engine Potential Improvement

Other improvements will be evaluated to determine if additional Proto 1 modifications and confirming tests are cost-effective. Design corrections for all loss mechanisms are being incorporated into the Proto 2 hardware and will be tested in the improved Proto 2 system hardware.

SECTION 3

PRODUCT DEVELOPMENT

SECTION 3
PRODUCT DEVELOPMENT

3.1 INTRODUCTION

The product development effort during this reporting period concentrated on completing development of the Proto 1 and advanced components, and initiating development and testing of experimental components for the Proto 2.

Materials development work for Proto 1 and Proto 2 bearings was completed during this period. A graphite filled polymide material was selected for the engine bearing application, but testing revealed the necessity for additional development of materials for this application. Work on the advanced combustor was also completed in this reporting period. Tests of the advanced combustor configuration indicated improved temperature and flow distributions and confirmed that the Proto 2 combustor configuration would meet its design goals.

Experimental Proto 1 versions of Proto 2 components were also designed and fabricated in this reporting period. The purpose of this effort was to provide experimental verification of Proto 2 component designs using the existing Proto 1 test units, thereby reducing risks in the Proto 2 development cycle. An experimental Proto 2 magnetic starter was developed and tested in the Proto 1 unit. Testing revealed that improper phasing between the displacer and power piston prevented a successful start sequence in the Proto 1 unit. However the design approach did not adversely affect operation once a start was effected. The design concept was therefore applied to the Proto 2 design.

Experimental evaluations of the second gas spring concept and an improved regenerator for the Proto 2 unit were also initiated in this reporting period. A retrofit second gas spring design was prepared for the Proto 1 unit, components were fabricated and assembly nearly completed in this reporting period. Test and evaluation of the second gas spring will be accomplished in January of 1979. A redesign of the regenerator to reduce thermal losses was also completed and test units for the Proto 1 system fabricated. Tests of the improved regnenerator design will also be conducted in January 1979.

3.2 MATERIALS DEVELOPMENT

The bearing material wear life test program initiated during the previous reporting period was completed in the current period. The self-lubricating material specimens and shafting evaluated consisted of the following:

- Specimens
  - Carbon Graphite, P5N (Pure Carbon)
  - Fluon, VP-25, PTFE (Polyflon Corp.)
  - Envex, 1228, Polyimide (Rogers Corp.)
  - K-30C, PTFE (Koppers Corp.)
  - Vespel, SP-21, Polyimide (DuPont)
  - Vistal, Ceramic (Coor's)
  - AD-90, Ceramic (Coor's)
  - Macor, Ceramic (Corning)
- Shafting
  - Chromeplated 4340 steel
  - Nitrided Nitralloy

The wear tests were conducted at the General Electric Materials and Processing Laboratory, Schenectady, New York, utilizing a Falex Model #5 test machine. A photograph of the test machine and drawings of the test specimens and shafts were presented in the previous semi-annual report.

The tests were originally planned for wear runs in a 250°F helium environment, with 700 cycle/minute oscillating motion over a 30° drive arc. However, after initial tests, no measurable wear could be detected on the P5N carbon graphite baseline material when subjected to surface unit loadings from approximately 4 psi to 100 psi, running for 21 to 24

continuous hours. It was suspected that the oscillating motion of the test did not produce equivalent bearing surface velocity to that present in the Stirling engine (which produced considerable carbon dusting when employing the carbon bearing sleeve). The test plan was subsequently modified to use a steady rotary motion producing a 590 ft/minute surface velocity, the average engine piston velocity. Considerable wear rate was obtained in the P5N carbon material at surface unit loadings of 50 psi or higher. A loading of 22 psi was thereby selected for comparative testing of the various material specimens.

The specimen weight loss summary obtained from the tests are shown in Table 3-1. All of the specimen test shafts exhibited negligible wear except for the ceramic specimens which showed wear from 0.007 to 0.010 inch. Based on these tests and previous testing in the Proto 1 hardware, several conclusions were reached:

1. Ceramics are unsatisfactory for this Stirling Engine bearing application.

2. PTFE and Polyimide materials are unsatisfactory in "hi-temp" shrink-fit sleeve bearing applications.

3. Carbon, PTFE, and Polyimide materials exhibited less wear when running against nitrided nitralloy than against chrome-plate.

4. The carbon vs. polyimide wear results were opposite to that experienced in the Stirling engine.

Table 3-1. Specimen Weight Loss Summary

MATERIAL		WT LOSS (GRAMS)
SPECIMEN	SHAFT	
Carbon (P5N)	Chrome-Plated 4340 Steel	0.0490
Polymide (Vespel, SP-21)	Chrome-Plated 4340 Steel	0.0662
PTFE (K-30C)	Chrome-Plated 4340 Steel	0.0414
Ceramic (Macor)	Chrome-Plated 4340 Steel	1.1178
Ceramic (Vistal)	Chrome-Plated 4340 Steel	0.0071
Carbon (P5N)	Nitrided Nitralloy	0.0456
Polyimide (Vespel, SP-21)	Nitrided Nitralloy	0.0516
PTFE (K-30C)	Nitrided Nitralloy	0.0126
Ceramic (Vistal)	Nitrided Nitralloy	0.0097

Based on these conclusions, the graphite filled polyimide bearing material was selected as the best material for the Proto 1 units. It was also concluded that additional wear-life tests would be necessary, with test conditions more nearly duplicating actual engine operating conditions. These additional tests are being planned as part of the add-on acceleration program, and will benefit from the Proto 1 endurance tests started at the end of this reporting period.

3.3 ADVANCED COMBUSTOR

During this reporting period the advanced combustor was assembled and a performance evaluation was completed. The combustor underwent flow distribution measurements and performance mapping at firing rates from 20 to 60 KBTUH and 0-30% excess air. The test results and evaluation summary are presented below.

3.3.1 HEAT EXCHANGER AND PREHEATER EFFECTIVENESS

The measured heat exchanger effectiveness, as a function of the number of heat transfer units, is shown in Figure 3-1. The performance of the advanced combustor essentially

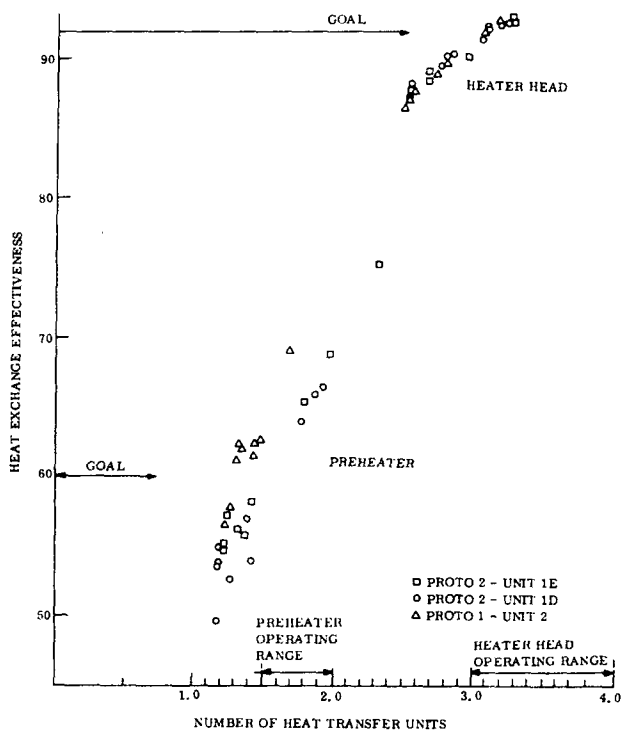

Figure 3-1. Heater Head and Preheater Effectiveness Vs. NTU

duplicated the performance of the Proto 1 combustor. With a 30% higher value for the AU value expected in the HAHP and the subsequent increase of the number of heat transfer units, the heat exchanger effectiveness is expected to exceed the design goal of 92%.

Preheater effectiveness is also shown in Figure 3-1. There appears to be a shift in the preheater effectiveness as compared to the Proto 1 combustor. The average of two thermocouples was used to determine heat exchanger exhaust gas temperature for the advanced combustor while Proto 1 testing used only one measurement. This may be a contributory factor since preheater effectiveness is most sensitive to this measurement. After accounting for this effect the preheater is expected to meet the Proto 2 60% design goal due to the higher NTU and C_{MIN}/C_{MAX} ratio at Proto 2 operating conditions.

3.3.2 PRESSURE DROP AND EXHAUST EMISSIONS

Several gas diffuser configurations and various air gap spacings were tested to determine the configurations which yielded the lowest CO emissions without excessive pressure drop. The configuration chosen was the segmented diffuser (Figure 3-2) with an air gap spacing of 0.2 inch. The CO emissions as a function of excess air for this configuration are shown in Figure 3-3. It can be seen that, at 15% excess air, the CO emissions satisfy performance goals, (< .04%) for both low and high firing rate conditions.

The pressure drop across the combustor was measured on the combustor test stand as a function of firing rate and excess air. The projected pressure drop when operating with the engine was determined using the combustor test stand data adjusted to account for air density differences. The projected pressure drop versus air flow for a two-stage firing rate is shown in Figure 3-4. Also shown in Figure 3-4 is data obtained when the advanced combustor was tested with the engine. It can be seen that the expected pressure drop is well within the design goal of 2 inches H_2O maximum.

3.3.3 FLOW DISTRIBUTION

Flow distribution tests with the partially assembled combustor were reported in the previous semi-annual report. To gain insight into the flow distribution at operating temperature,

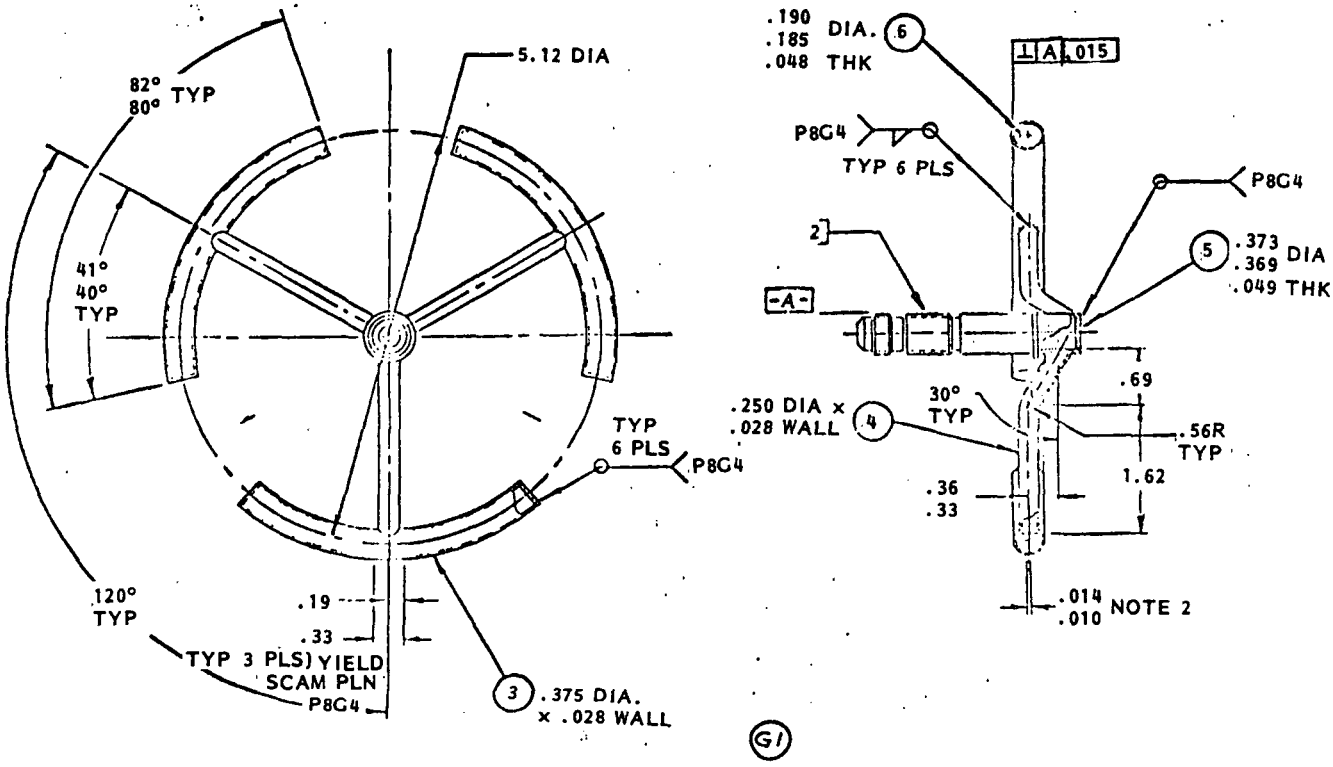

Figure 3-2. Segmented Diffuser Ring

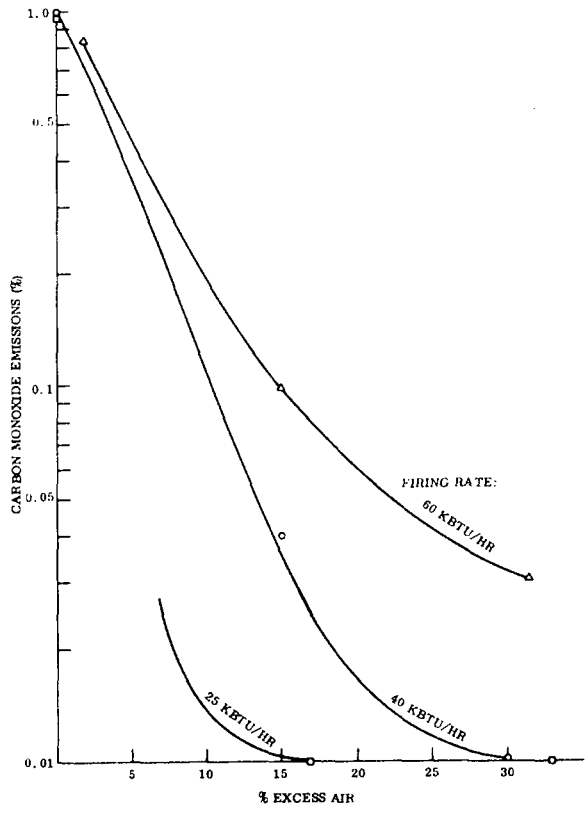

Figure 3-3. CO Vs. Excess Air

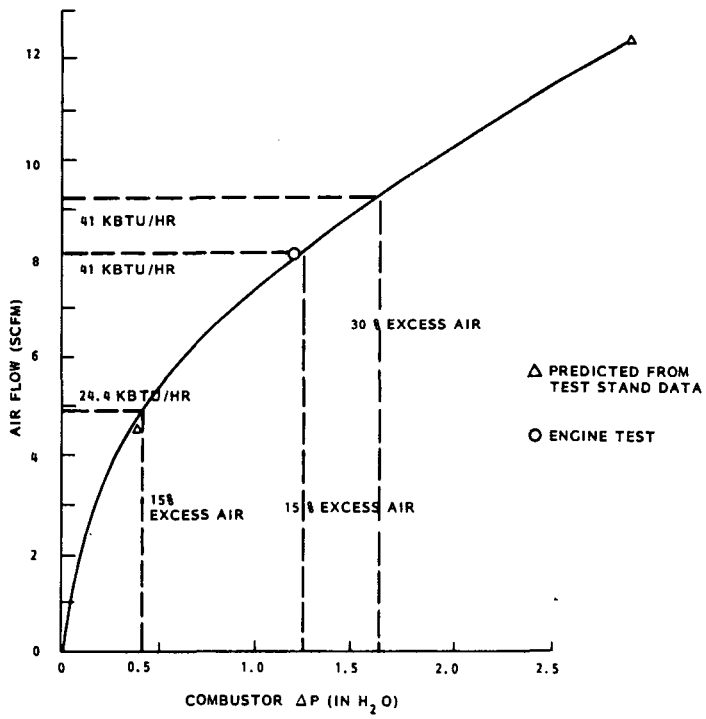

Figure 3-4. Advanced Combustor Pressure Drop Vs. Required Air Flow

the relative distribution of temperatures around the preheater were monitored. Four thermocouples were located around the preheater exit upstream of the mixing region. The temperature differences between the four thermocouples are shown below and compared to that measured for the Proto 1 combustor. The comparison indicates a significantly reduced temperature variation and therefore a marked improvement in the flow distribution over the Proto 1 combustor.

PREHEAT CIRCUMFERENTIAL TEMPERATURE DISTRIBUTION

	ADVANCED COMBUSTOR	PROTO 1 - UNIT 2
20 KBTUH	$\Delta T = 16$ to $19^{o}F$	$\Delta T = 11$ to $20^{o}F$
40 KBTUH	$\Delta T = 20$ to $23^{o}F$	$\Delta T = 50$ to $60^{o}F$
60 KBTUH	$\Delta T = 22$ to $27^{o}F$	$\Delta T = 75$ to $80^{o}F$

3.3.4 HEATER HEAD TEMPERATURE

The heater head used in testing the advanced combustor featured the improved contoured fin design described in the previous semi-annual report. It was intended that the modification would reduce the fin leading edge temperature. Test data indicates that the modification was successful. The average fin temperature is compared below with that of the previous Proto 1 design. The comparison is made at three firing rates; the temperature range shown is the result of the 0, 15 and 30% excess air levels tested at each firing rate.

	AVERAGE FIN TEMPERATURE (^{o}F)		
	20 KBTUH	40 KBTUH	60 KBTUH
Proto 2 Contoured Design	393-408	612-626	775-798
Proto 1 Design	532-543	799-802	968-989

3.3.5 COMBUSTOR EFFICIENCY

The combustor efficiency, fin temperature and preheat temperature as measured on the combustor stand as well as with the engine are shown in Figure 3-5. The efficiency shown does not include conduction losses. The efficiency, as measured on the test stand at the 40 KBTUH rate, represents an increase of one percentage point over that measured for the Proto 1 combustor. This is attributed to the improvement in fuel/air mixing and flow distribution and indicates the Proto 2 combustor will meet its design goals.

3.4 MAGNETIC STARTER

Previous analyses have indicated the need for a positive starting mechanism for the FPSE. As detailed in the previous reporting period, an electromagnetic starting mechanism was designed for retrofit into the Proto 1 Stirling engine. As shown in the cross-sectional view presented in Figure 3-6, the design incorporates a linear electric solenoid within the power piston/displacer assembly that initiates an oscillating motion of the displacer during the start-up sequence. This motion of the displacer generates a thermodynamic pressure variation in the working space by shuttling the working fluid between the hot expansion space and

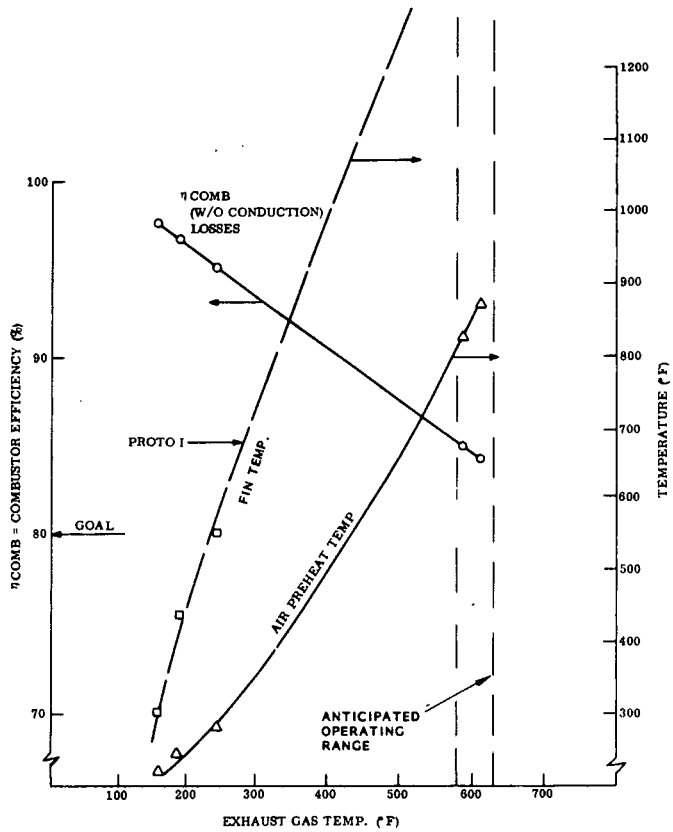

Figure 3-5. Advanced Combustor Test Results (15% Excess Air)

the cold compression space. The resulting pressure variation acting against the face of the power piston produces an oscillation of the power piston assembly which starts the engine.

Developmental testing of the electric start mechanism showed that while a lively displacer/piston motion could be generated at the driven frequency, the displacer to piston phase angle relationship was not correct and sustained engine operation could not be accomplished. The additional weight of the displacer assembly with the starter components is mismatched with the existing displacer rod area, and the resulting motion is not properly phased. Successful engine tests did verify that the relatively small forces of the electric starter's mechanical spring did not adversely effect engine start-up and subsequent sustained operation. The test results are being incorporated into the Proto 2 magnetic starter design.

3.5 SECOND GAS SPRING

The benefit of incorporating a second gas spring in the HAHP engine was identified in the in the system testing of the Proto 1 hardware (see Sections 2.4 and 2.6). The decision to

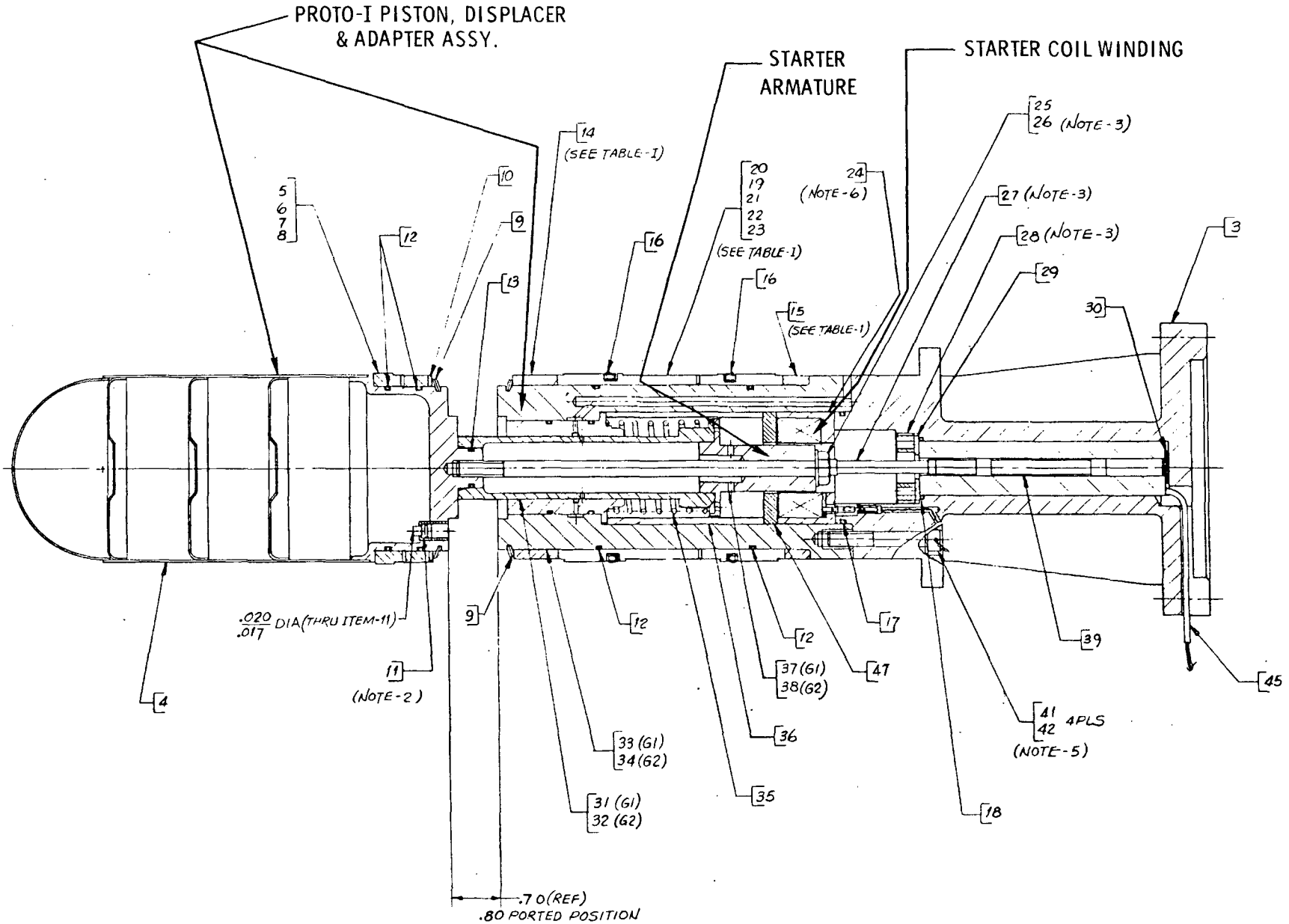

Figure 3-6. FPSE Electromagnetic Starter, Proto 1

incorporate a second gas spring in the Proto 2 design was coupled with a decision to design, fabricate and test a second gas spring in the Proto 1 hardware. This hardware is aimed at developing experimental verification of the second gas spring design, thereby reducing the design risk in the Proto 2 unit.

The second gas spring, a drawing of which is shown in Figure 3-7, was sized to provide the Proto 1 unit with an operating frequency of 25 to 28 Hz, depending upon the compressor piston assembly mass tested. As shown in the assembly drawing, the second gas spring consists of a piston/cylinder configuration designed to mount directly to the flange provided on the top of the engine/compressor pressure vessel. The second gas spring piston diameter is 3.25 inches (8.3 in^2) and the volume can be varied from 110 to 145 in^3. The power piston to pressure vessel LVDT (displacement transducer) that previously mounted to this flange has been integrated into the top of the second gas spring upper housing. The piston rod mounted to the end of the compressor performs the dual function of supporting the second gas spring piston as well as being the linear bearing shaft which supports and centers the power piston/compressor assembly at the top of the pressure vessel.

All detail drawings for the gas spring components were issued, parts were ordered and procured, and assembly was started during this reporting period. Final assembly and the start of testing will be accomplished in January of 1979. A photo of the second gas spring hardware is shown in Figure 3-8.

3.6 IMPROVED REGENERATOR

As discussed in Section 2 of this report, the Proto 1 regenerator housing had significant heat losses contributing to a reduced engine efficiency. A modified regenerator housing was therefore designed for the Proto 2 engine, as shown in Figure 3-9. Experimental units for the Proto 1 test engine were also fabricated for testing in conjunction with the second gas spring tests in January.

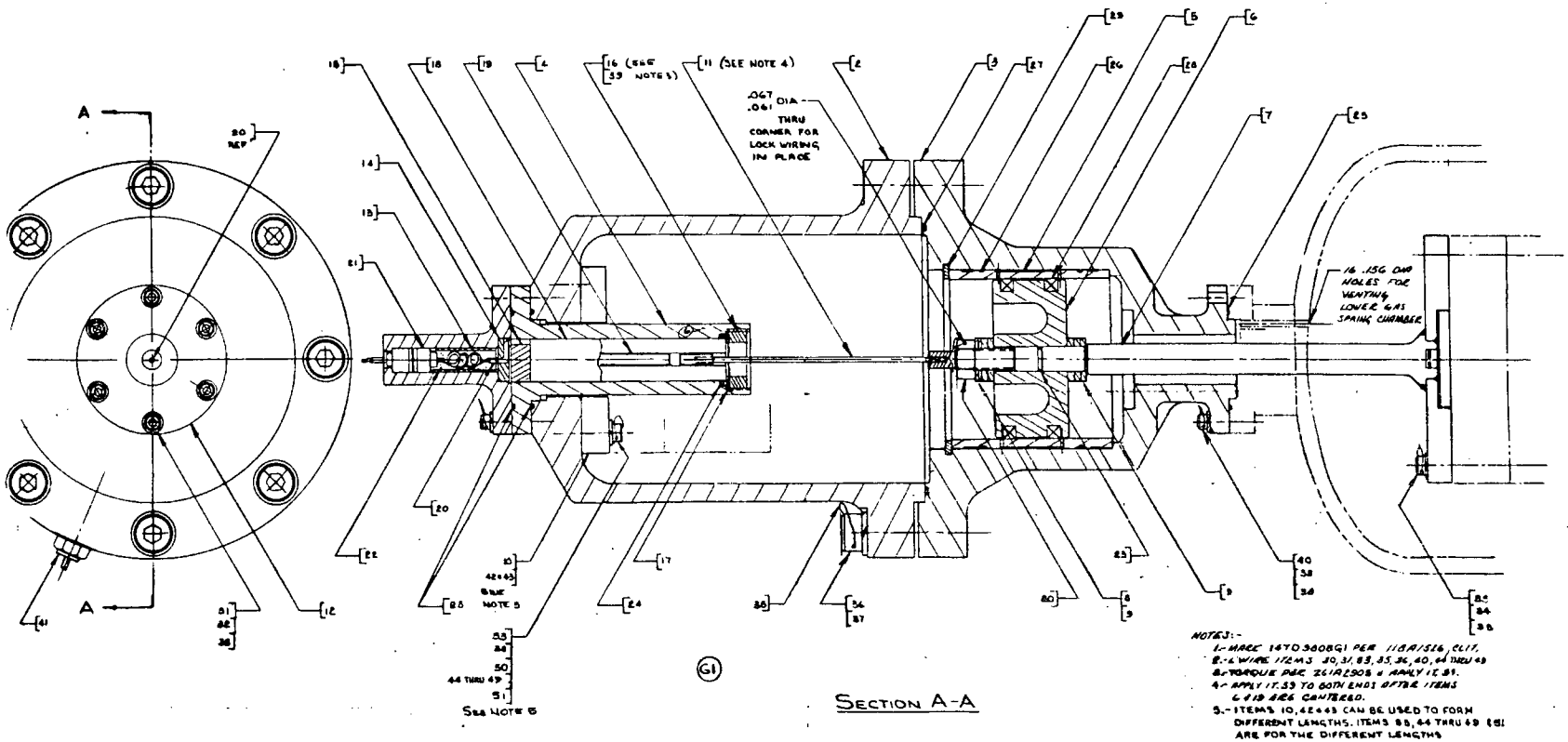

Figure 3-7. Proto 1 Second Gas Spring Assembly

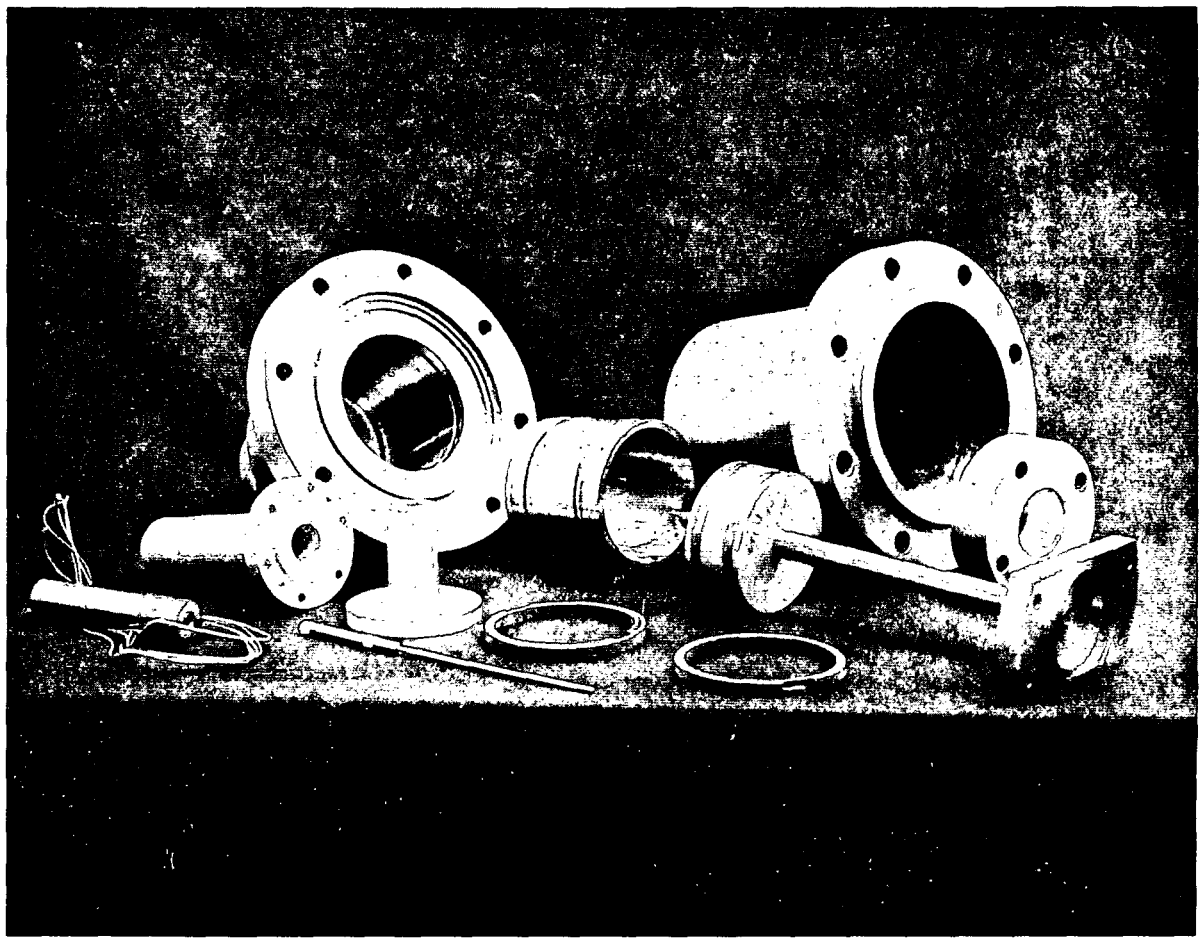

Figure 3-8. Proto 1 Second Gas Spring Hardware

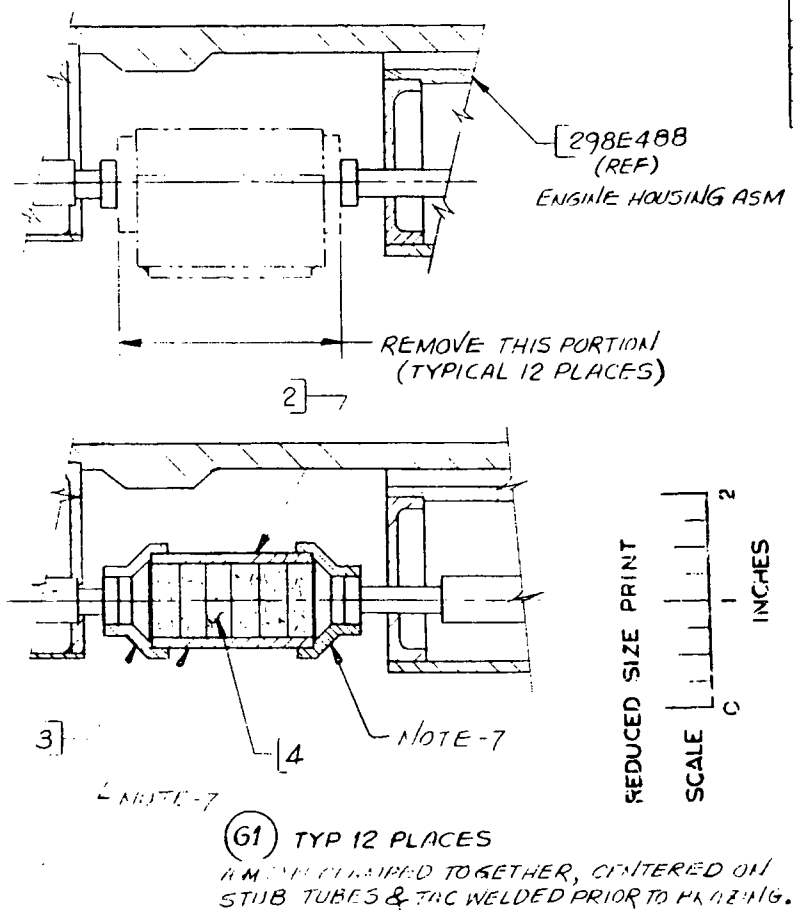

GENERAL ELECTRIC

221B3285 CONT ON SHEET ~ SH NO. 1

REV NO. 221B3285 CONT ON SHEET ~ SH NO. 1

TITLE REGENERATOR RETROFIT ASM

FIRST MADE FOR

SHOW	SH	TWO	QUANTITY	G1	PART NO.	NAME	DRAWING NO.	DESCRIPTION, MATERIAL, WEIGHT
				X	1	ASSEMBLY	221B3285G1	
				12	2	HOUSING	295A8237P1	
				24	3	CAP ASM	295A8241G1	
				72	4	MATRIX	273A6752P1	(.003 FINE)
				AR	5	FILLER	AMS4775	(AWS A5.3 BNi-1)

NOTES

1. CLEAN PER P4C2 PRIOR TO BRAZING.
2. NICKEL BRAZE ASSEMBLY PER AMS2675 IN A CONTROLLED ATMOSPHERE, FOLLOWED BY RAPID COOLING.
3. PRESSURE TEST ASSEMBLY WITH CLEAN DRY N_2 OR He GAS @ 1650 PSIG EXCEPT COOLER CHAMBER. TEST COOLER CHAMBER @ 175 PSIG ONLY.
4. LEAK TEST ASSEMBLY PER ASTM E-499. He MIXTURE TEST PRESS. = 300 PSIG; MAX LEAK RATE = $1 \times 10^{-8} CM^3/SEC$.
5. FINISHED ASSEMBLY SHALL BE FREE OF DIRT, RESIDUE, CHIPS, OIL ETC. CARE SHALL BE TAKEN DURING COMPLETE ASSEMBLY AND CLEANING PROCESS TO PREVENT CONTAMINATES FROM ENTERING THE REGENERATORS (ITEM 4).
6. CAP/PLUG FINISHED ASSEMBLY, TO MAINTAIN CLEANLINESS.
7. ATTACH T/C's AS INDICATED FOR HIGH TEMP BRAZE CYCLE. ATTACH T/C TO LARGE BELL HOUSING FOR USE DURING COOL DOWN CYCLE. PARTS MUST NOT OXIDIZE DURING OVEN REMOVAL CYCLE.

Figure 3-9. Regenerator Retrofit Assembly

SECTION 4

PROTO 2 SYSTEM DEVELOPMENT

SECTION 4

PROTO 2 SYSTEM DEVELOPMENT

4.1 INTRODUCTION

The design of the second prototype HAHP was initiated in the July-December 1978 reporting period. The Proto 2 design is predicated on the technology base provided by the Proto 1 unit. The Proto 2 component designs incorporate the basic technical features of their Proto 1 counterparts, modified and improved to reflect the lessons learned from Proto 1 testing. The overall Proto 2 system design also has been optimized to maximize the system performance/cost ratio, considering both operating costs and initial costs.

In addition to improvements and refinements to the Proto 1 unit design, additional emphasis has been placed on the outdoor unit package design. Producibility, installation, service and shipping considerations have influenced the design of the outdoor unit, as well as performance and safety requirements. Special attention has been devoted to developing an appearance design accommodating the HAHP Proto 2 volume and arrangement needs while meeting product aesthetic standards.

The following subsections describe the status of the Proto 2 component designs, the subsystem requirements, the overall configuration of each subsystem, and the tradeoffs examined to make the design selections. The overall system configuration is described first including system requirements, performance and the major system design tradeoffs influencing the subsystem designs.

4.2 SYSTEM DESIGN

4.2.1 SYSTEM REQUIREMENTS AND PERFORMANCE

Design requirements for the Photo 2 HAHP components and subsystems were established in this reporting period. These requirements were developed from the Proto 2 system design requirements, which, in turn, utilized the component and subsystem characteristics obtained in the Photo 1 hardware, projected to realistic Proto 2 goals. The Proto 2 system requirements thus obtained meet the HAHP product prototype goals and are realistic projections of tested hardware.

The Proto 2 system design requirements are summarized in Table 4-1.

Table 4-1. Proto 2 Requirements

Criteria	Requirement
Cooling Capacity ①	36,000 BTUH
Cooling COP ① (Excl. Parasitics)	0.87
Heating Capacity at 47°F ②	40 ③ KBTUH @ Low Firing Rate
at 17°F ②	50 ③ KBTUH @ High Firing Rate
Heating COP (Excl. Parasitics) at 47°F ②	1.6
at 17°F ②	1.3
Parasitics	1100 Watts
Outdoor Unit Envelope	60" x 32" x 44" (Coil) x 62" (Max.)
Noise Limit Outdoor Unit	54 dbA

① 95°F Outdoor, 80°F D.B./67°F W.B. Indoor

② 70°F D.B./60°F W.B. Indoor

③ Without make-up heat

A summary of cooling mode performance at the 95°F ambient design point is shown in Table 4-2. The corresponding system schematic is shown in Figure 4-1. Performance over the HAHP operating ambient temperature range is shown in the schematics of Figures 4-2 through 4-4. Corresponding capacity and COP maps are shown in Figures 4-5 and 4-6.

4.2.2 DESIGN TRADEOFFS

A number of system options were considered in the Proto 2 design. Engine stroke limits, outdoor coil design temperature in cooling, and outdoor air handler configurations are discussed in this section. Component tradeoffs are described in the subsystem design sections.

Table 4-2. Proto 2 Design Point Performance

Outdoor Temperature	95°F DB
Indoor Temperature	80°F DB/67°F WB
Outdoor Air Flow	3,400 CFM
Indoor Air Flow	1,200 CFM
Condenser Temperature	120°F
Evaporator Temperature	49°F
Discharge Pressure	279 PSIA
Suction Pressure	89 PSIA
Firing Rate	41,000 BTUH
Combustor Efficiency	82%
Engine Efficiency	32%
Compressor Power	3.2 KW
Refrigerant Mass Flow (R22)	540 LB/HR
Net Capacity	35,600 BTUH
Heat Pump COP	3.35
System COP (Excluding Parasitics)	0.87
Parasitic Power	
Indoor Fan	300 W
Outdoor Fan	400 W
Hydronic Pump	250 W
Controls and Blower	150 W
Total	1,100 W

Compressor Overstroke

Proto 2 engine/compressor matching analyses revealed that at very low ambient temperatures (~ 10°F and below), there is a potential compressor piston overstroke at the design firing rate of 41 KBTUH. Low suction pressure may cause the compressor piston to collide with the compressor housing. Several methods of solving the problem were investigated and are described below.

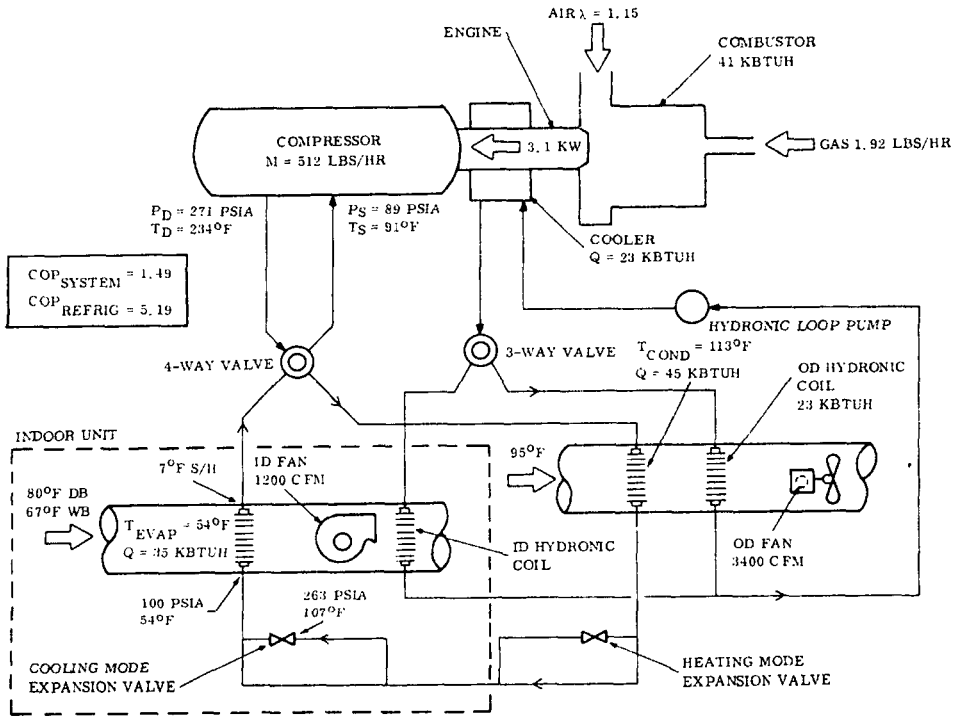

Figure 4-1. Proto 2 95°F Cooling Operation

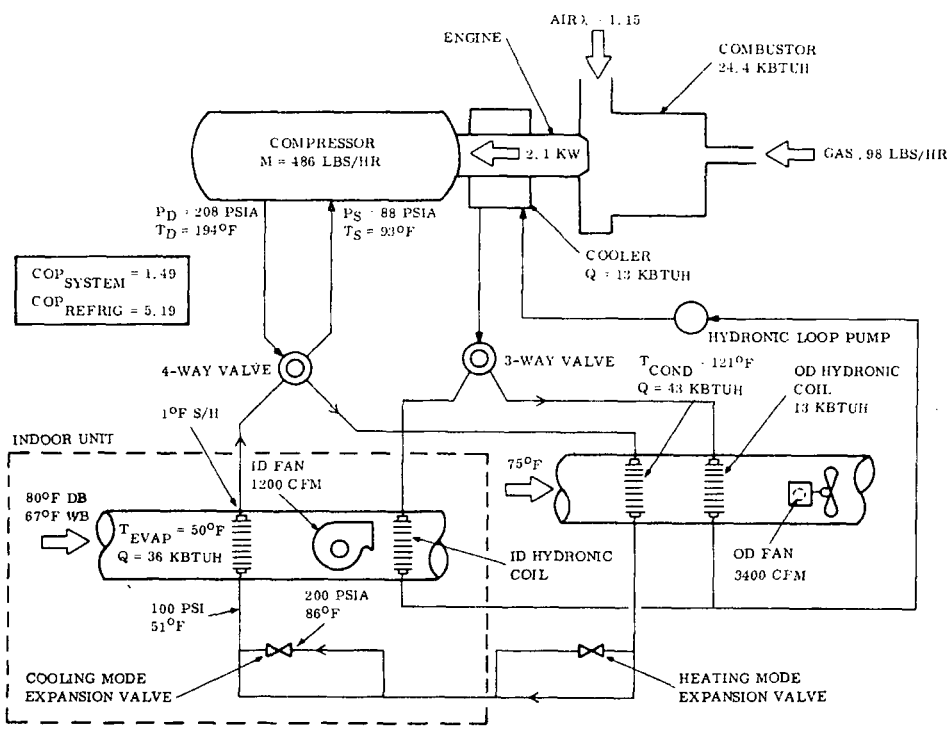

Figure 4-2. Proto 2 75°F Cooling Operation

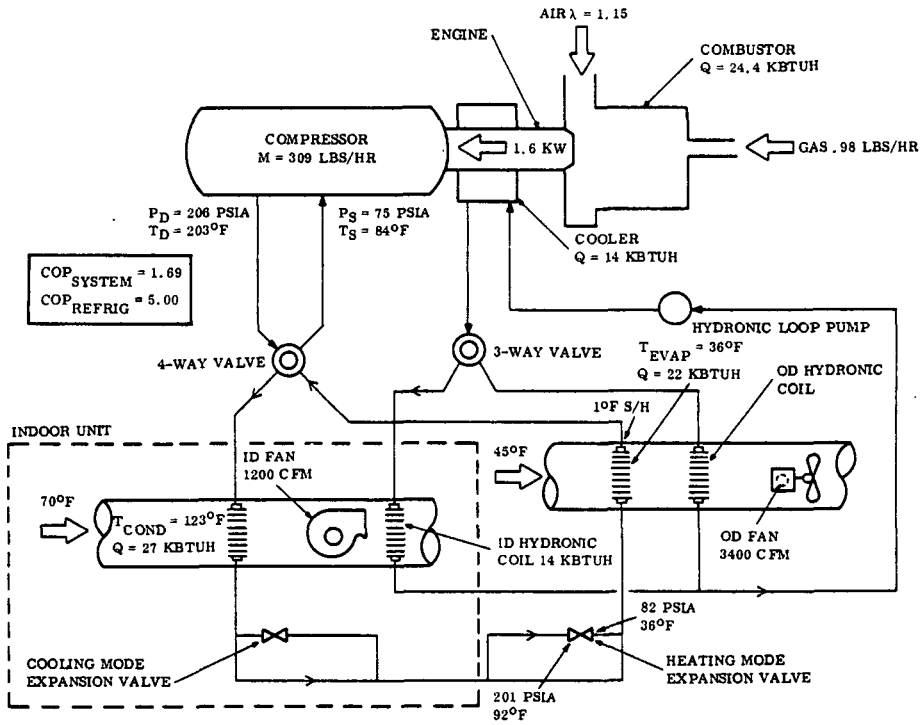

Figure 4-3. Proto 2 45°F Heating Operation

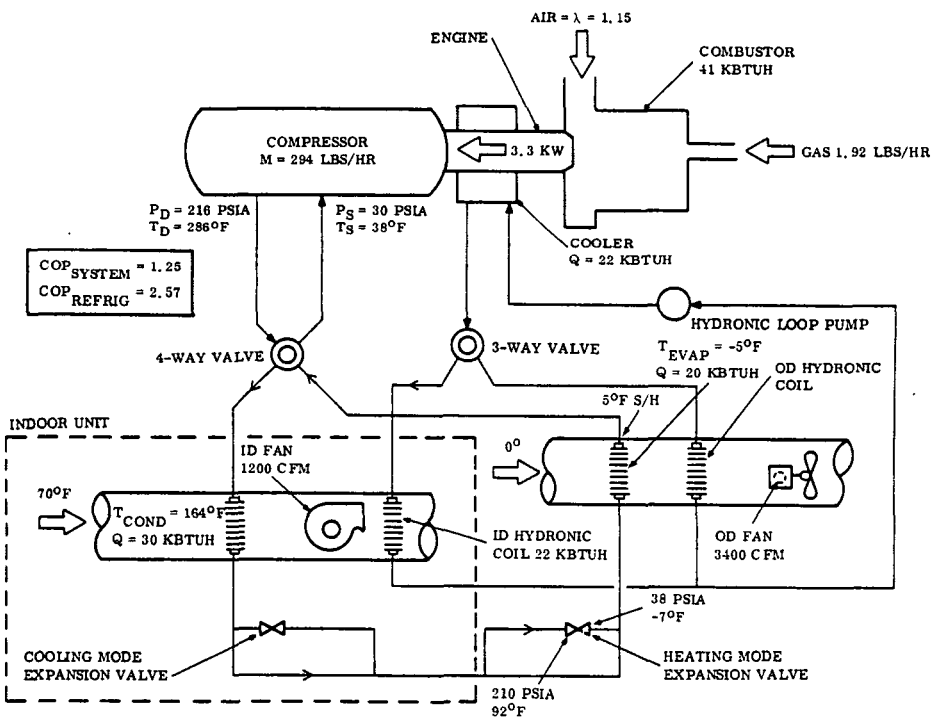

Figure 4-4. Proto 2 0°F Heating Operation

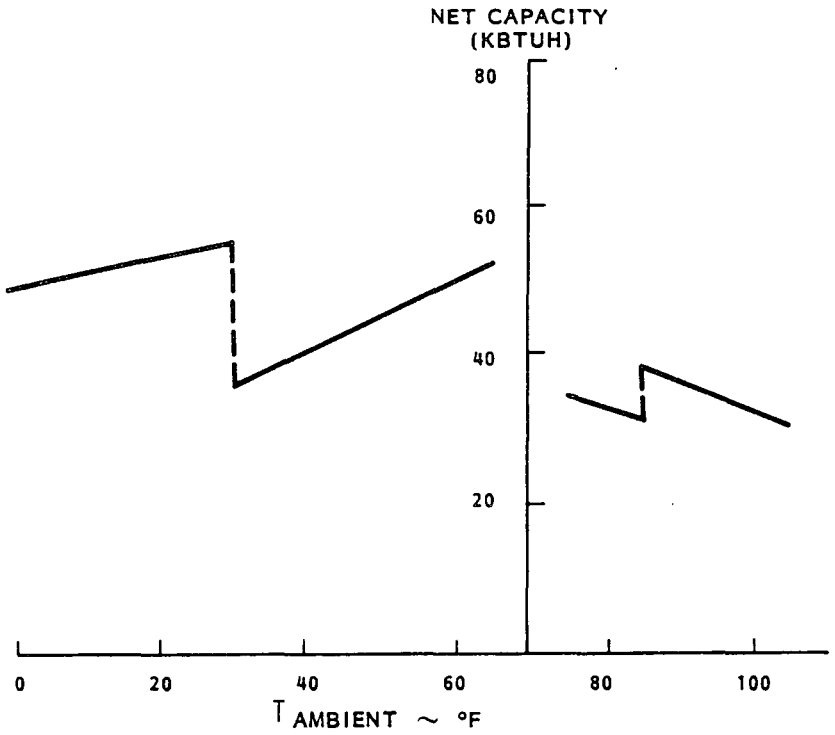

Figure 4-5. Proto 2 Capacity Profile

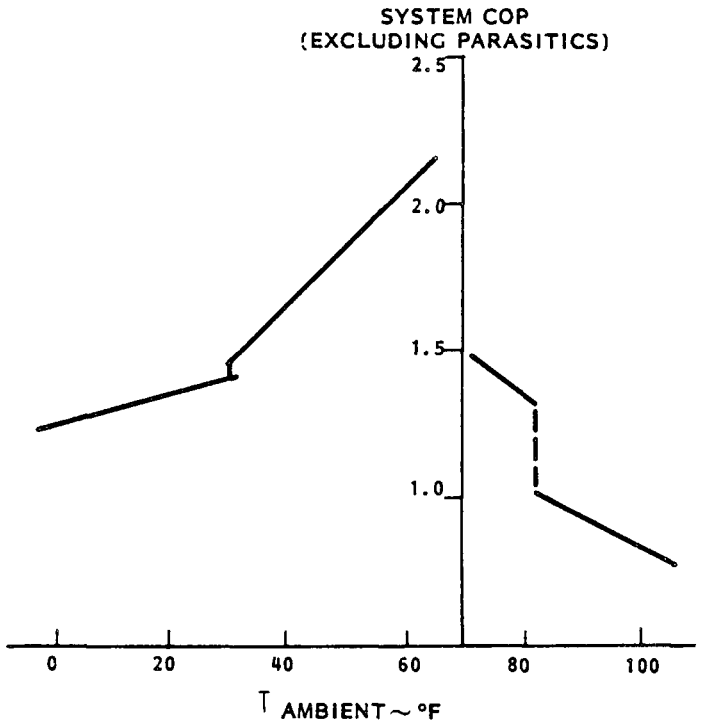

Figure 4-6. Proto 2 System COP

The simplest solution is to reduce the compressor piston stroke by increasing the compressor gas spring reference pressure. Analysis showed that this method will have the desired effect, but is not feasible because the peak gas spring pressure under some operating conditions exceeded the allowable pressure of the refrigerant/lubricant mixture.

An alternative is to reduce the firing rate at very low ambient temperatures. The economics of operating at low ambient temperatures influences this approach. It is anticipated that the HAHP, when fully developed as a product offering, will have supplementary heating capacity in the form of a small, compact gas burner, integrated within the outdoor unit. The capacity of this unit will be tailored to the region, in order to satisfy the building load at very low ambient temperatures (similar in approach to an electric heat pump). A task to begin development of the supplementary heating capacity for the HAHP is incorporated in the add-on program. With supplemental heating capacity, the selection of a switchover point from heat pump operation to supplementary heating operation may be based on economic rather than technical issues.

An analysis was performed to determine the effect on annual operating savings of a cut-off ambient temperature below which the engine would be turned off and only auxiliary heat would be used, assuming no overstroke condition is encountered. Heating loads for Philadelphia and Minneapolis were examined. For Philadelphia, if there were no overstroke concern, the HAHP capacity would be sufficient to satisfy the load at the 41 KBTUH firing rate. Therefore, no auxiliary heat is required as long as the HAHP is operating. For Minneapolis, the auxiliary heat is required below $0^{o}F$ to meet the load. For both cities, the auxiliary system was assumed to operate on natural gas with an estimated efficiency of 75% and 500 watts parasitic power. The auxiliary capacity was assumed to be 40 KBTUH for Philadelphia and 60 KBTUH for Minneapolis, both with and without the HAHP operating.

The results of the performance/cost analysis are shown in Figure 4-7. The difference in savings is referenced to the annual energy costs of the HAHP with full ambient range operation when compared to a high efficiency gas furnace (combustion = 83%) and central air conditioner (EER = 10). The savings refer to projected energy costs for 1980, in 1977 dollars. For

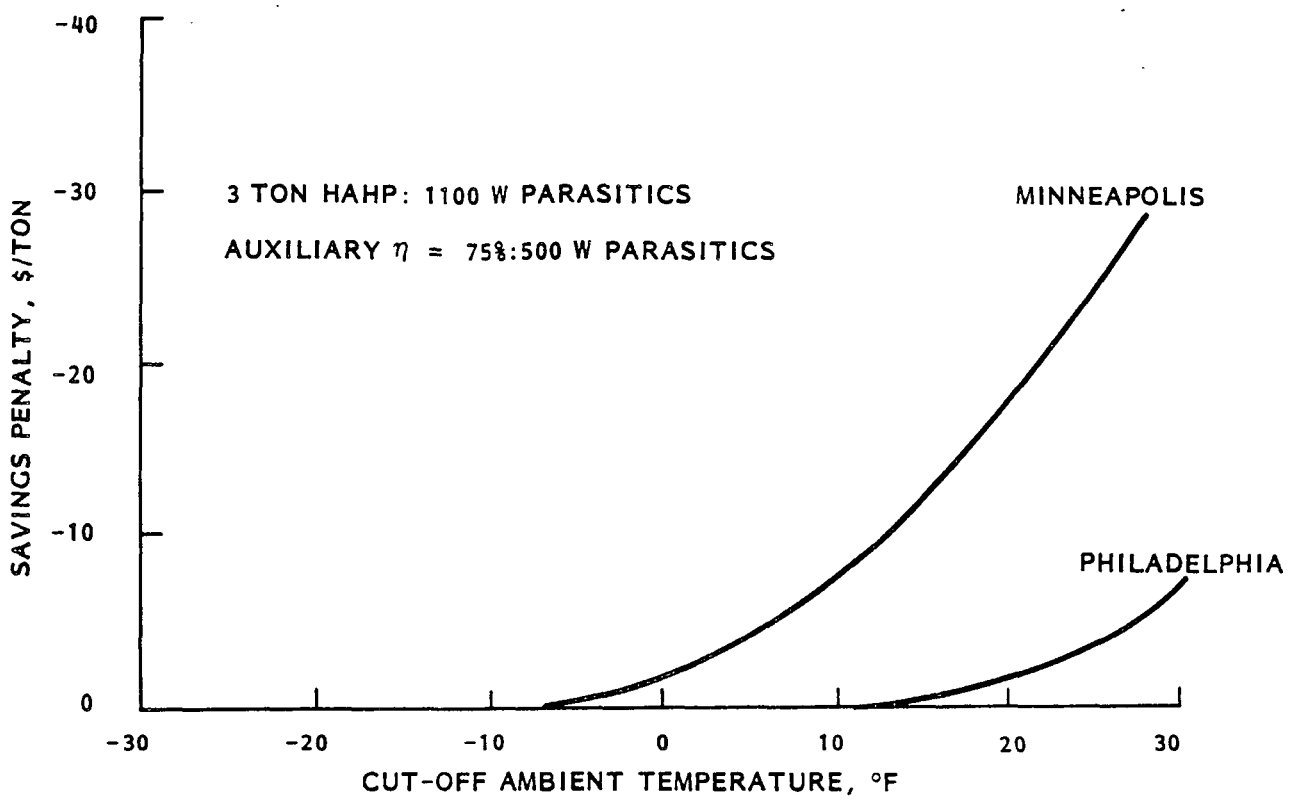

Figure 4-7. Reduction in Annual Savings When Using Only Auxiliary Heat Below Cut-off Temperatures

Philadelphia, a 10°F cut-off temperature for Proto 2 has no effect on savings. However, for Minneapolis, the effect at 10°F is significant, and a cut-off below 0°F is required for minimal loss in savings.

Evaluation of economic, technical, and certification factors led to the selection of a nominal 10°F ambient temperature for the Proto 2 HAHP switch-over to auxiliary heat. Integrated and system testing, plus additional development under the add-on program will be used to select the final switch-over point for the Proto 2 demonstration unit and to evolve the switch-over point for the eventual product.

Condenser Temperature

A condenser coil average design point operating temperature of 120°F was selected for the Proto 2 versus the original design goal of 118°F. The difference affects the Proto 2 COP since more compressor power is required to maintain capacity against a higher refrigerant pressure ratio. The condenser temperature could be lowered to meet the original 118°F design goal by increasing the outdoor air flow rate, or by increasing the coil area and air flow rate. Both approaches require more fan power but result in lower gas consumption.

Although the heat pump COP suffers slightly due to the higher condenser temperature, design changes to meet the 118°F goal are not warranted due to the cost involved relative to the potential operating savings. Operating cost saving projections for the Proto 2 variations are illustrated in Figure 4-8. The annual operating savings is the energy cost difference between the gas fired heat pump system and an advanced gas furnace/electric air conditioner system. The goal for the Proto 2 system is to realize savings of 60 to 64 $/ton, which is the midpoint of the acceptable HAHP payback range. The performance goals corresponding to this payback

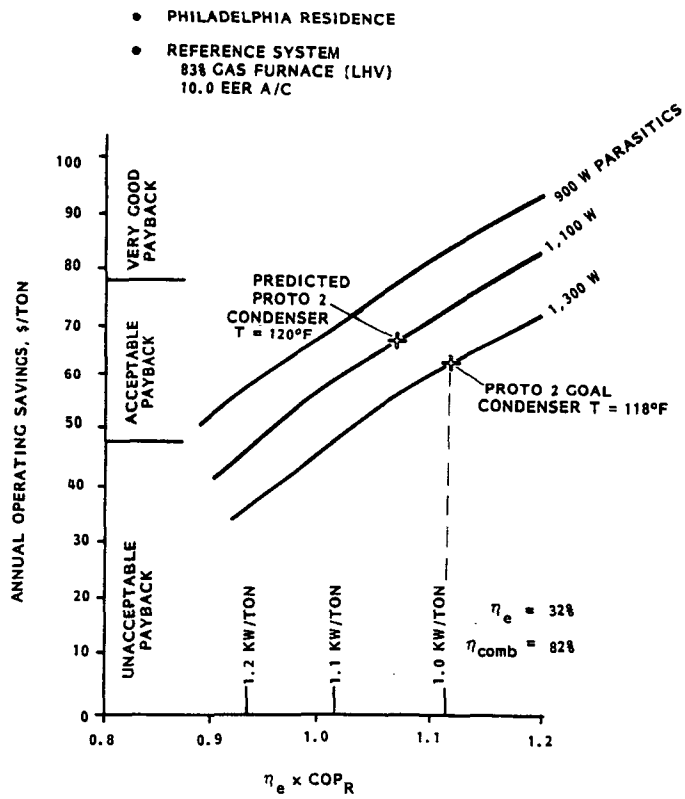

Figure 4-8. Savings Tradeoff for Proto 2 Design

are a heat pump COP of 3.5 and parasitics of 1300 watts. The low Proto 2 parasitics projected offset the lower COP effect due to the higher (120°F) condensing temperature, so the payback goal is still achieved.

Although higher savings could be realized by reducing the condensing temperature to the original 118°F goal, the increased size of the coil will result in a higher initial cost, offsetting most of the projected additional savings. Therefore, the 120°F condensing temperature was established for the Proto 2 unit.

Outdoor Unit Configuration

Tradeoff studies were conducted for various approaches to the outdoor air handler package. A dual versus single fan unit was one tradeoff examined. The dual configuration has separate fans for the refrigerant and hydronic coils. Potential savings of parasitic power were anticipated since the hydronic coil fan would not be run in the heating mode. However, results of the study revealed that a single fan package required lower total fan power even though the fan was larger. The single fan system also offered a lower noise level, shorter unit package length and lower cost. Table 4-3 summarizes results of the study, which also included evaluations of both enclosing coil (box coil) and open coil (U coil) configurations. These results led to the selection of the single fan concept for Proto 2.

Table 4-3. Outdoor Unit Package Tradeoff Study

	Fan Diameter (inches)	Motor		Noise (SRN)	Blade Pitch	CFM/FAN	Watts/Fan	Dimensions l x w x h (inches)
		HP	RPM					
Dual Fan								
U-Coil	16	1/4	1,075	19.4	40°	2,100	375	54 x 31 x 39
	18	1/6	1,075	20.5	24°	2,050	230	62 x 31 x 45
Box-Coil	16	1/4	1,075	19.4	40°	2,040	375	62 x 31 x 33
Single Fan								
U-Coil	24	1/4	850	19.5	25°	3,400	375	52 x 31 x 34
	22	1/6	850	19.0	25°	2,700	250	50 x 31 x 34
	20	1/6	850	18.0	32°	2,700	250	52 x 31 x 40
Box-Coil	20	1/6	850	18.0	32°	2,700	250	52 x 31 x 34
	22	1/6	850	19.0	25°	2,500	250	55 x 31 x 42

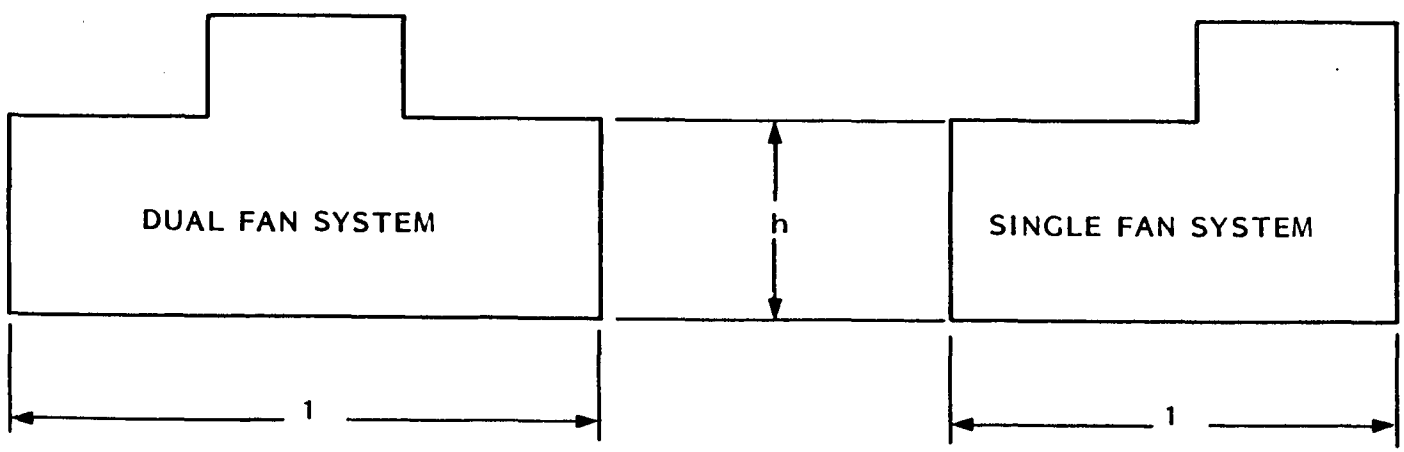

4.3 PROTO 2 COMPONENT DESIGNS

During this reporting period, the design of the Proto 2 HAHP components progressed through the layout stage and into the detail design phase. An extensive internal design review on the system assembly, subassembly and component designs was conducted prior to beginning final designs. The review team consisted of key personnel from GE - Valley Forge, GE - Air Conditioning Business Division, and GE - Corporate Research and Development Center. All facets of the Proto 2 design were reviewed and no major design problems were identified. A number of suggested modifications to the designs were provided by the review team and will be incorporated into the final designs to improve reliability, reduce costs, standardize parts and adhere to design practices for HVAC equipment. A layout of the Proto 2 combustor/engine/compressor is shown in Figure 4-9. Detailed descriptions of the component and subsystem designs are presented in subsequent sections.

4.3.1 COMBUSTOR

Design of the Proto 2 combustor was initiated during this reporting period. Design analyses and design layouts of the Proto 2 combustor were completed. The Proto 2 design is predicated on the measured performance of the Proto 1 and advanced combustors previously developed. The major differences between the Proto 1 combustor and the Proto 2 design were made to improve combustor efficiency, and component reliability and endurance. The design requirements, design improvements and expected performance of the Proto 2 combustor are discussed in the following paragraphs.

4.3.1.1 Proto 2 Combustor Design Requirements

The Proto 2 combustor design requirements are essentially the same as the requirements established for the Proto 1 combustor with the following exceptions:

a. Combustor efficiency has been increased from 80% to 82%.

b. A two stage firing rate schedule is required for Proto 2.

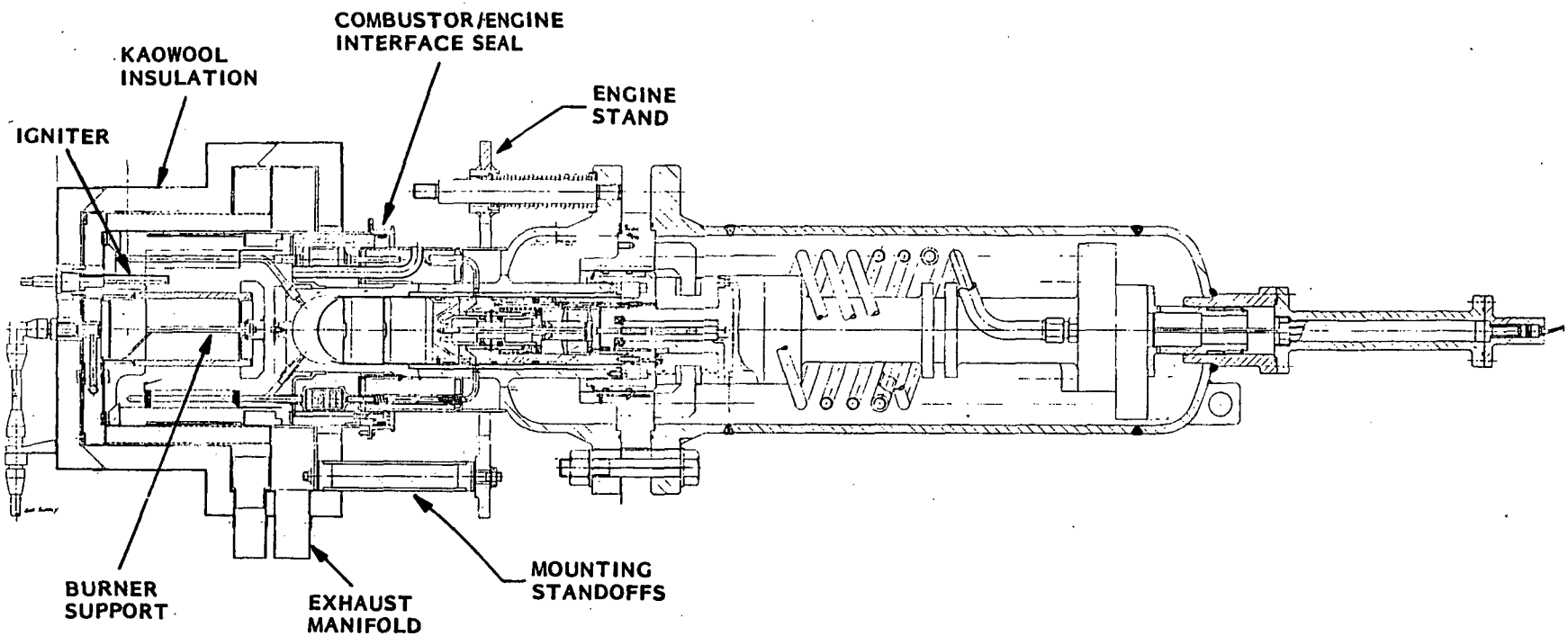

Figure 4-9. Proto 2 Combustor/Engine/Compressor

These requirements were established to satisfy the Proto 2 System COP goals. The Proto 2 combustor design requirements are summarized in Table 4-4.

Table 4-4. Proto 2 Combustor Design Requirements

Ratings:	$T_{amb} > 85^{o}F$	41 KBTUH
	T_{amb} $30^{o}F - 85^{o}F$	24.4 KBTUH
	$T_{amb} < 30^{o}F$	41 KBTUH
Efficiency		82%
CO Emissions @ 15% Excess Air		0.04%
Combustor Pressure Drop		2 in H_2O
Heater Head Heat Exchanger Effectiveness		92%
Pre-Heater Effectiveness		60%

4.3.1.2 Combustor Description

The Proto 2 combustor was shown integrated with the engine in Figure 4-9. Its principal of operation is identical to that of the Proto 1 and the Advanced Combustors. Incoming combustion air is preheated prior to combustion by means of a corrugated sheet metal heat exchanger in order to increase combustor efficiency. Subsequent to exiting the preheater the air is mixed with the fuel and passed through the transpiration cooled burner. Combustion is initiated through the use of an electronic spark ignation system. The combustion products travel in a cross flow direction across the engine heater head heat exchanger. Radiation shields, located outboard of the heater head heat exchanger are used to direct the energy transfer, via radiation, back to the finned tube heat exchanger. The exhaust products flow through alternate sections of the air pre-heater thereby transferring available thermal energy to the incoming combustion air and reducing exhaust temperatures. Since the engine heater head is reciprocating with respect to the hard mounted combustor, a seal is used to prevent leakage of combustion products at the engine/combustor interface.

The materials chosen for the Proto 2 design were selected on the basis of withstanding 15 years of operation in the outdoor unit. The materials selected are summarized in Table 4-5.

Table 4-5. Proto 2 Materials Selection

Inlet Manifold	316L Stainless steel
Exhaust Manifold	316L Stainless steel
Housing	316L Stainless steel
Cover	316L Stainless steel
Heat Shield	347 Stainless steel
Radiation Shields	310/316L Stainless steel
Diffuser and Spacers	304L Stainless steel
Burner Support	347 Stainless steel
Burner Element	Hoskins 875, 80% porosity, .0056 wire
Swirler	347 Stainless steel
Gaskets	Felted asbestos sheet packing
Insulation	Kaowool
Flame Detector	Kanthal
Igniter	Kanthal
Engine/Combustor Seal	Graphite impregnated PTFE

The projected performance of the Proto 2 combustor is based on the measured performance of the advanced combustor. The prediction is well supported by test data since the Proto 2 utilizes the same preheater, engine heater head, and inlet/exit manifolds as used in the advanced combustor design. The performance of the advanced combustor was discussed in Paragraph 3.4. The projected Proto 2 performance is summarized in Table 4-6.

Table 4-6. Proto 2 Performance Summary

Parameter	Goal	Projected Performance
Heater Head Effectiveness	92%	92 - 96%
Preheater Effectiveness	60%	62 - 68%
Pressure Drop	< 2 IN H_2O	1.25 IN H_2O
CO Emissions	0.04%	0.04%
Combustor Efficiency	82%	81.3%

4.3.1.3 Component Design Selections

While the Proto 1 combustor met all performance goals, testing indicated that certain components should be changed to improve reliability, and/or endurance limits. The major changes to the Proto 2 design (from Proto 1) are categorized below and are discussed in the following paragraphs.

1. Burner element support hardware
2. Ignition hardware
3. Insulation System
4. Combustor mounting in the outdoor unit
5. Combustor/engine interface sealing
6. Air flow distribution
7. Auxiliary equipment for two stage firing rate schedule

Burner and Support Hardware. The Proto 1 design combustor utilized band clamps to secure the burner element to the burner support and burner cap. Proto 1 testing has shown that, due to the high temperatures involved, the stainless steel clamps yield, resulting in loss of preload. A design modification was incorporated into the advanced combustor, whereby a threaded rod secures the burner cap and burner element. This concept was shown in Figure 4-9. Testing of this design on the combustor test stand has indicated acceptable

performance, however, additional testing with the engine will be required to evaluate reliability of performance at engine operating conditions. This will be accomplished during the next reporting period.

Ignition Hardware. As previously reported, the formation of an oxide on both the Proto 1 spark igniter and flame rod has resulted in unreliable performance. (The oxide formation suppresses spark generation and flame detection.) Therefore an investigation was performed to evaluate the materials in use as well as alternate ignition methods for the Proto 2 combustor.

The Proto 1 igniter and flame rod were made of Hoskins 667 (95 Ni - 4 Mn). A literature search determined that the maximum continuous recommended usage temperature is 1830°F but for intermittent use, a maximum temperature of 1600°F is recommended. Advanced combustor testing indicated that a temperature of 1650°F can be expected for a firing rate of 40 KBUTH and 1725°F for a firing rate of 60 KBTUH (mapping purposes). Alternate materials were investigated and Kanthal A-1 was selected for the Proto 2 design. This material (80 Ni - 15 Cr - 5 Al) is capable of withstanding intermittent temperatures to 2280°F which well exceeds the expected operating conditions.

An alternative method of providing ignition was also investigated. That method involved the use of a silicon carbide resistance heater. This approach has been utilized in GE gas dryer products for the last several years. Its principal of operation is that resistance heating of the element to $\sim$ 1800°F results in spontaneous ignition of the fuel/air mixture. It is a low cost approach and the material involved, silicon carbide, has temperature capability well exceeding the expected operating range. A typical Glo-bar heating element is shown in Figure 4-10. Further investigation will be performed regarding methods of integrating this type component into the combustor. If suitable, this concept would be retrofitted into the Proto 2 combustor.

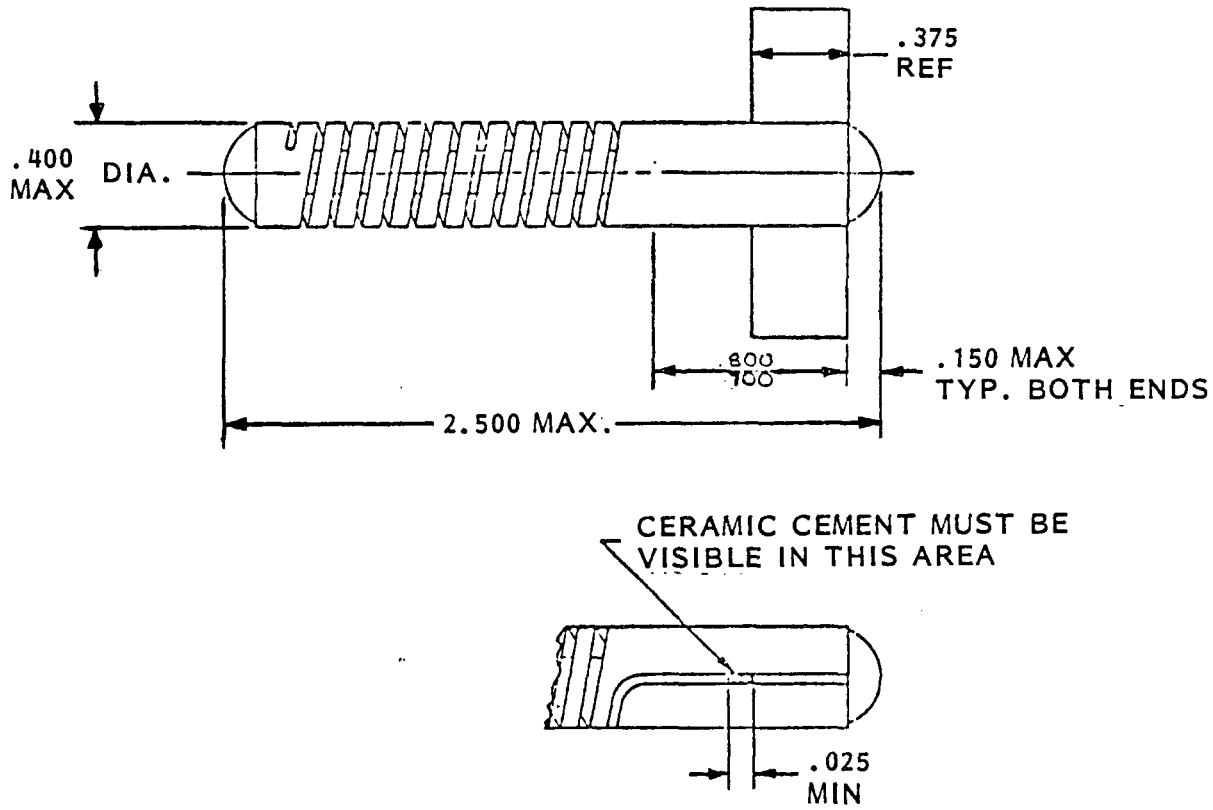

Figure 4-10. Glo-Bar Heating Element

Insulation System. The Proto 1 design featured the use of a Kaowool blanket insulation. While effective, this insulation system was found to be friable, resulting in the generation of unwanted debris within the combustor. In addition, the external insulation was not protected from the outdoor elements. The insulation will be indirectly exposed to these elements when in the outdoor unit.

An investigation into the use of a vacuum molded or hardened insulation system is in progress. Design concepts and cost tradeoff studies for such an approach are underway at GE and Babcock-Wilcox, the supplier of the Kaowool product. To protect the external insulation, two approaches are being evaluated; namely, the use of protection can and/or moisture proof protective coatings.

In order to improve combustor efficiency, the thickness of external insulation is being increased from 1/2 inch to 1 inch thick. The projected heat loss summary is tabulated below:

Q_{input}:	41,000 BTUH
$Q_{exhaust}$:	6,355 BTUH
$Q_{conduction}$:	1,290 BTUH
Q_{engine}:	33,355 BTUH
η :	81.3%

The projected heat losses will be reviewed and updated as the detail design is finalized during the next reporting period.

Combustor Mounting in Outdoor Unit. In order to improve accessibility for field maintenance, the system for mounting the combustor in the outdoor unit will be modified for Proto 2. The Proto 1 combustor was mounted to a plate located under the combustor. Replacement of a burner element, for example, is difficult and time consuming with such a mounting feature. The Proto 2 combustor will be mounted from the exhaust manifold (top) using three mounting standoffs which are secured to the engine mounting stand (Figure 4-9). This will significantly improve accessibility to internal combustor components.

Engine/Combustor Interface Seal. As previously reported, the Kaowool rope type seal which prevents leakage of combustion products from escaping at the engine/combustor interface has shown a high wear characteristic. Alternate design concepts are presently being studied. The most attractive concept to date locates the interface seal in a zone where operating temperatures are sufficiently low to permit usage of the more conventional type seals. The Proto 1 seal operates at $\sim$1100-1200°F. Proto 2 analysis has shown that temperatures as low as 400°F can be realized by locating the seal on the engine cooler and designing the combustor interface flange to be cooled by natural convection (Figure 4-9). Detail design of this concept is in progress and the various conventional types of seals, packings, piston rings, etc. are being evaluated.

Flow Distribution. The design changes incorporated into the advanced combustor to improve the flow distribution through the preheater will be incorporated into the Proto 2 design. These changes are shown in Figure 4-11 and include:

1. Radial inlet and exit ducts
2. A directional vane and barrier located in the inlet manifold
3. An increase in the size of the exhaust duct

Auxiliary Equipment. GE has selected Torin Corporation to design and fabricate a two-speed air blower which satisfies the two-stage firing requirements. The expected static pressure/ air flow required is shown in Figure 4-12. Torin has proposed two blower designs for GE evaluation. The first design is a centrifugal, forward curved impeller design and the second design features a backward curved impeller. Both blowers are being designed to operate at 230 volts. Delivery and evaluation testing will be performed during the next reporting period.

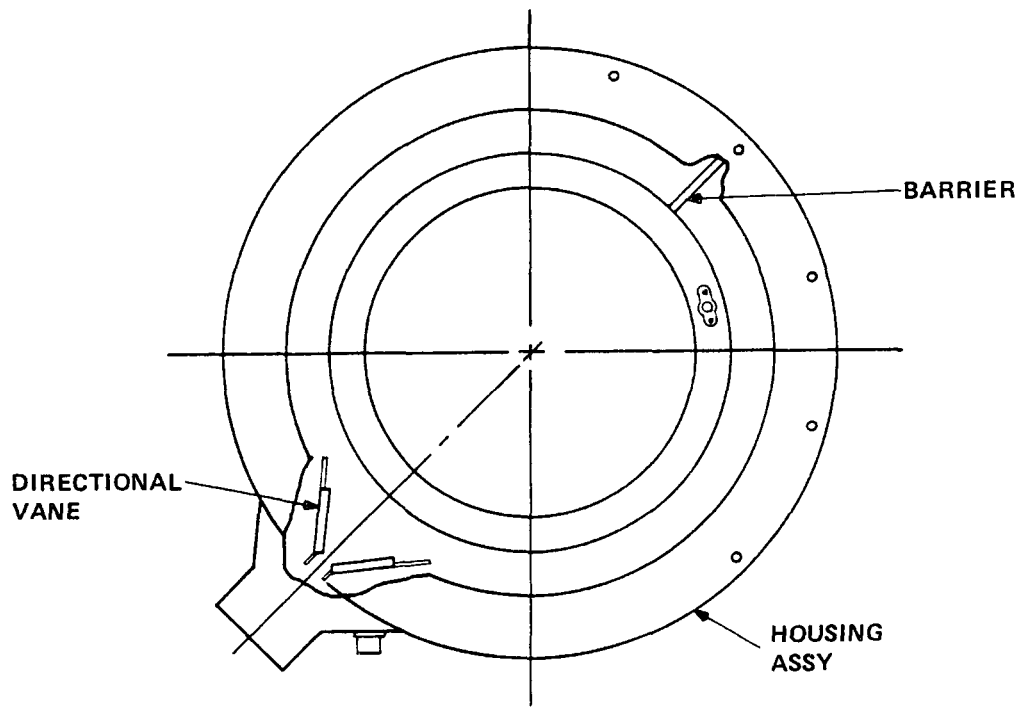

Figure 4-11. Proto 2 Combustor - Inlet Housing

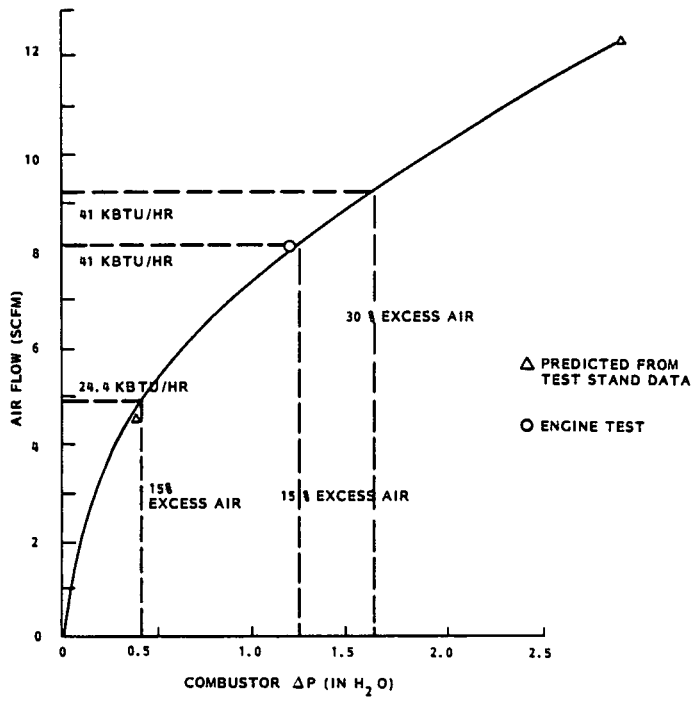

Figure 4-12. Proto 2 Pressure Drop Vs. Required Air Flow

The inlet air to the combustor will be filtered using a Purolator disposable spin-on type filter. The filter was chosen because of its low pressure drop at design operating conditions. The filter and its operating characteristics are shown in Figure 4-13.

To accommodate the dual firing requirement, a two-stage electric gas valve will be utilized in the Proto 2 design. The gas valve and its operating characteristics are shown in Figure 4-14.

4.3.1.4 Planned Activity For Next Period

During the next reporting period the detail design of the combustor components and assembly will be completed. Current schedule indicates that combustor fabrication and assembly will be completed. Performance and evaluation testing will also be performed on the Torin air blowers and a final selection will be made. Testing of the first Proto 2 combustor will also be initiated.

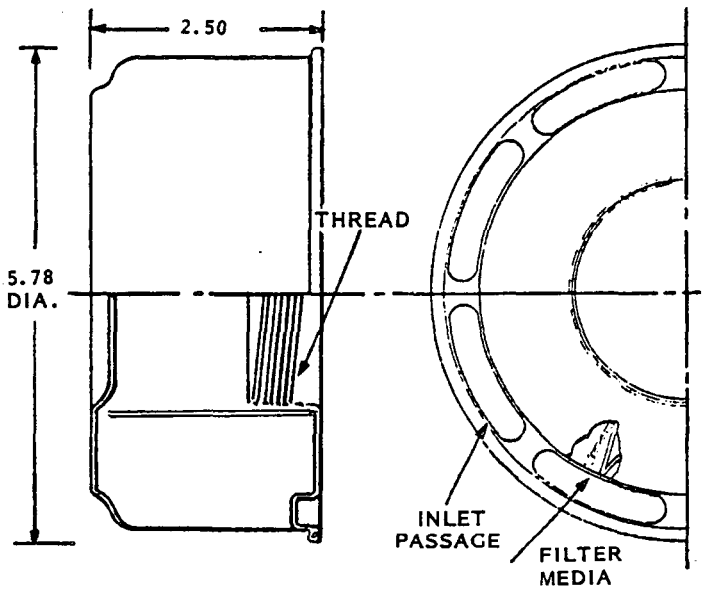

VENDOR:	PUROLATOR
TYPE:	DISPOSABLE, SPIN-ON
FILTRATION:	30 μ
EFFICIENCY:	99.5% MINIMUM
FILTER MEDIA:	PLEATED PAPER
PRESSURE DROP:	0.02 in H_2O @ 5 SCFM
	0.09 IN H_2O @ 10 SCFM
	0.16 IN H_2O @ 15 SCFM
	0.27 IN H_2O @ 20 SCFM

Figure 4-13. Spin-on Air Filter

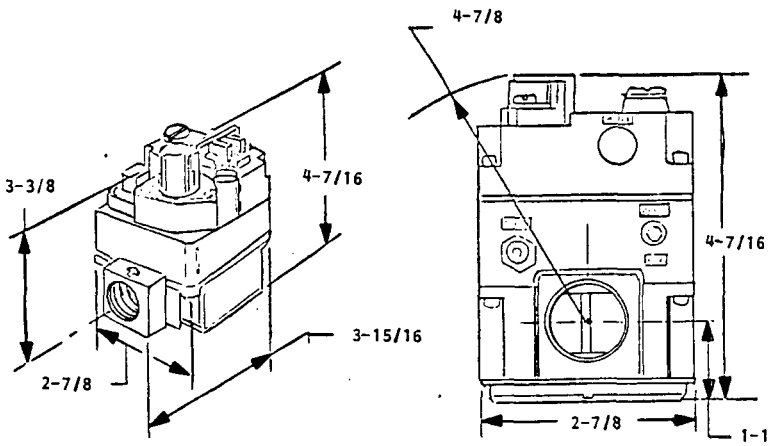

VENDOR:	WHITE-RODGERS
TYPE VALVE:	TWO STAGE, ELECTRIC
AMBIENT TEMPERATURE RANGE:	-40°F TO 175°F
MAXIMUM PRESSURE:	0.5 PSI
MOUNTING:	MULTIPOISE
CAPACITY:	60 BTU/HR MAXIMUM ADJUSTABLE STAGING

Figure 4-14. Two Stage Electric/Gas Valve

4.3.2 STIRLING ENGINE

Design of the Proto 2 Stirling Engine during this reporting period progressed through the layout phase into detail design. The engine design retains the basic proven design features of the Proto 1 engine, but incorporates changes from lessons learned in the Proto 1 unit development. These changes include the following:

1. Engine/compressor resizing to optimize matching
2. Improved seals and sleeve bearings incorporated on both the power piston and the displacer
3. Regenerator housing redesign to reduce heat losses
4. Heater head recontouring to reduce maximum fin temperature
5. Twenty-four heater head tube brazed joints eliminated by tubes designed without return bend fittings
6. Engine to combustor seal improvements
7. Displacer redesign for improved strength and reliability
8. Engine materials selection for extended life requirements

4.3.2.1 Proto 2 Engine Design Requirements

The Proto 2 Free Piston Stirling Engine has been designed for a power output of 3 KW with a heater head temperature of 1250°F. The engine design operating frequency is 30 Hz. With a 15 year design life at 5500 operating hours per year, the fatigue endurance life is 8.9×10^9 cycles. The unit has been designed for a maximum allowable creep of 1% throughout its design life and with a 2.25 design safety factor. Table 4-7 presents a summary of the engine design requirements.

Three major differences exist between the Proto 1 and Proto 2 engine designs. These differences consist of the following changes:

1. A second gas spring has been added to the power piston assembly to increase the engine operating frequency to 30 Hz.

2. An electromagnetic engine start mechanism has been incorporated into the power piston/displacer assembly to provide an electric engine start capability.

3. The engine design life has been increased from the Proto 1 one year level to 15 years. The major impact of this change is the material changes need to meet the increased fatigue endurance and allowable creep.

Table 4-7. Proto 2 Engine Design Requirements

Engine Power Output	3 KW
Operating Pressure	870 psi (60 BARS)
Operating Temperatures:	
Heater head tubing	1250°F
Cylinder Head	1300°F
Heater Head Fins	1700°F
Cold side coolant inlet	140°F
Maximum Charge Pressure	1160 psi (80 BARS)
Working Fluid	Helium
Life	15 Years
Operating Hours Per Year	5500 hr
Operating Frequency	30 Hz
Fatigue Endurance Life	8.9×10^9 Cycles
Design Safety Factor	2.25
Allowable Creep	1% Maximum

4.3.2.2 Proto 2 Engine Description

A layout drawing of the Proto 2 combustor/engine/compressor assembly was shown in Figure 4-9. As shown in the drawing, the Proto 2 engine derives its input energy from the closely coupled gas fired combustor previously described in Paragraph 4.3.1. Power

is delivered from the engine through the power piston which is directly coupled to the housing of the free piston inertia type refrigerant compressor described in Paragraph 4.3.3. Design parameters for the Proto 2 engine are itemized in Table 4-8, and a graphical representation of the power piston and displacer motion as referenced to the cylinder housing is shown in Figure 4-15.

Table 4-8. Proto 2 Engine Design Parameters

PARAMETER	VALUE
Engine Bore Size	2.875 IN. DIA.
Power Piston Stroke (Peak-to-Peak)	1.30 IN.
Power Piston Weight	26 LB
Cylinder Head to Cooler Port Center Line	7.87 IN.
Displacer Gas Spring:	
Rod Area/Dia.	1.35 IN^2/1.31 IN.
Volume (Mean)	7.2 IN^3
Displacer Length	6.041 IN.
Displacer Weight	2.0 LB
Piston Dynamic Centerline to Displacer Dynamic Centerline, (Refer to Engine Housing)	0.78 IN.
Displacer to Piston Phase Angle	39 Degrees
Displacer to Piston Minimum Dynamic Clearance	0.05 IN.
Power Piston 2nd Gas Spring:	
Area	14 IN^2
Volume	122 IN^3
Operating Pressure	870 PSI (60 BARS)

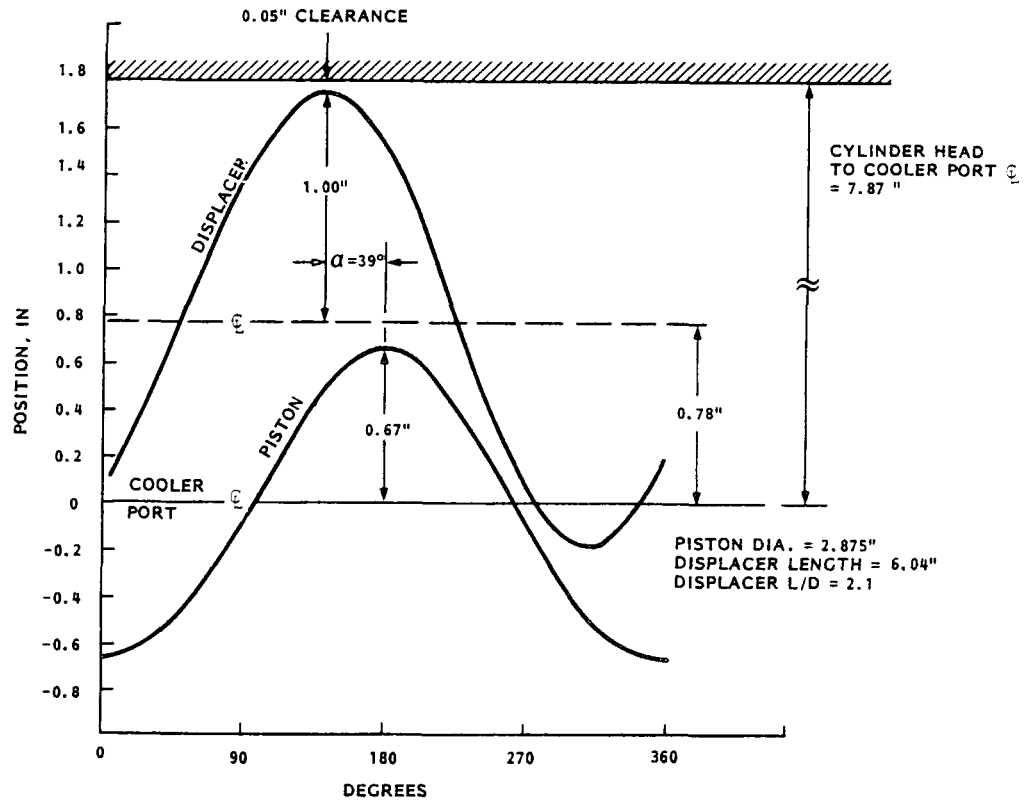

Figure 4-15. Proto 2 Stirling Engine Power Piston and Displacer Motion

Material selections for the Proto 2 engine were driven by life requirements, operating temperatures and pressures, and experience gained from the Proto 1 unit. A listing of the major component material selections are presented in Table 4-9.

4.3.2.3 Proto 2 Engine Design Selections

A primary concern in the design of the Proto 2 engine was the material selection and detail design of the hot-side components. To provide a 15-year design life, both fatigue endurance and allowable creep requirements had to be satisfied. Tradeoff studies resulted in the material selections presented in the above paragraph.

Steady state engine housing temperatures used in designing Proto 2 were derived from Proto 1 test data and Proto 2 thermodynamics analyses. Typical Proto 1 temperatures along the length of the housing are shown in Figure 4-16, along with the estimated maximum temperatures for Proto 2. Steady state temperatures for Proto 2 at specific engine locations are shown in

Table 4-9. Proto 2 Engine Material Listing

Component	Material
Engine	
Cylinder Head*	Inconel 625
Cylinder Housing*	316L
Elliptical Head	316L
Mounting Flange	316L
Liner	4340 plus hard chrome plate/nitrided nitralloy
Displacer Shell and Body	Inconel 625
Displacer Rod	Al 2024-T4, annodized with PTFE impreg./MoS_2
Piston Body	Al 2024-T4/cast iron
Piston/Displacer Rod Bearing Sleeve	4340 R_c58-62 plus hard chrome plate/nitrided nitralloy
Piston and Displacer Seal and Rider Rings	Graphite and MoS_2 filled polyimide/PTFE
Engine/Compressor Adapter Housing	Al 2024-T4
O-Rings	Viton-A
Heater Head	
Tubing	Inconel 625
Fins	Inconel 600
Sleeves	Inconel 625/316L
Braze Alloy	Nickel Base (AWS A5.8) (B Ni-1)
Regenerator	
Housings	Inconel 625
End Caps	Inconel 625
Matrix	310 SST; 0.003 diameter
Cooler Assembly	
End Rings	316 L
Divider Ring	316 L
Tubing	316 L
Springs	300 Series SST
Wrapper - Inner and Outer	316 L

* Bimetallic weld joint, EB welding process.

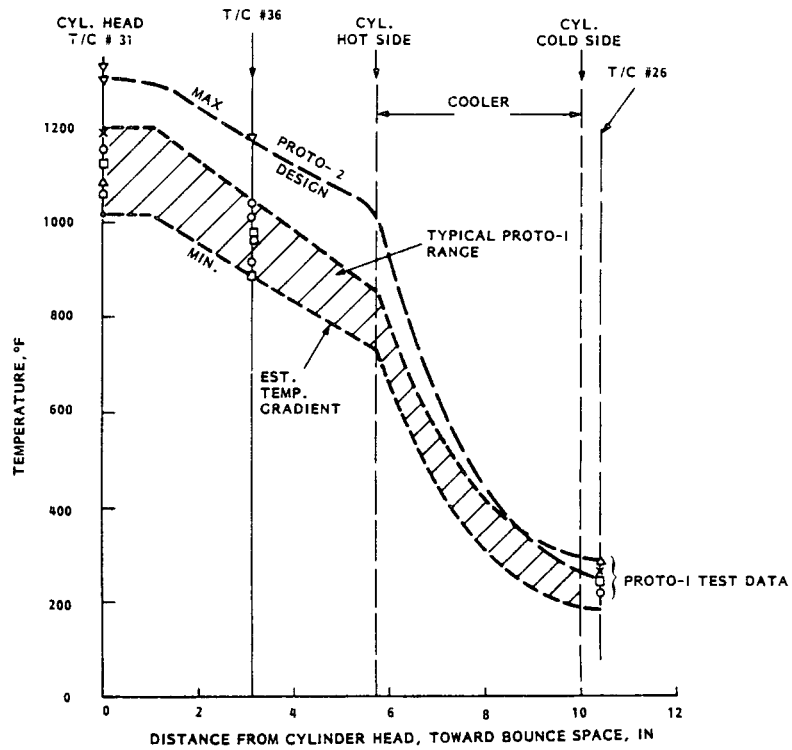

Figure 4-16. Steady State Engine Housing Temperature

Figure 4-17. The correlation between the two data sources is considered to be quite good, giving confidence in the temperature levels used in designing the Proto 2 engine.

Retaining the proven design philosophy of the Proto 1 unit, variable features have been designed into the Proto 2 engine to permit changing materials and/or dimensional parameters where practical. Material alternates provided include seal and rider rings for the power piston, displacer, and second gas spring piston; and liners for the engine cylinder, second gas spring, and upper power piston/compressor assembly support bearing. Geometric parameter variations include displacer rod diameter and centering port size/location; piston/displacer rod bearing sleeve diameter; displacer gas spring volume; power piston overstroke limits; and second gas spring volume and centering port size and location.

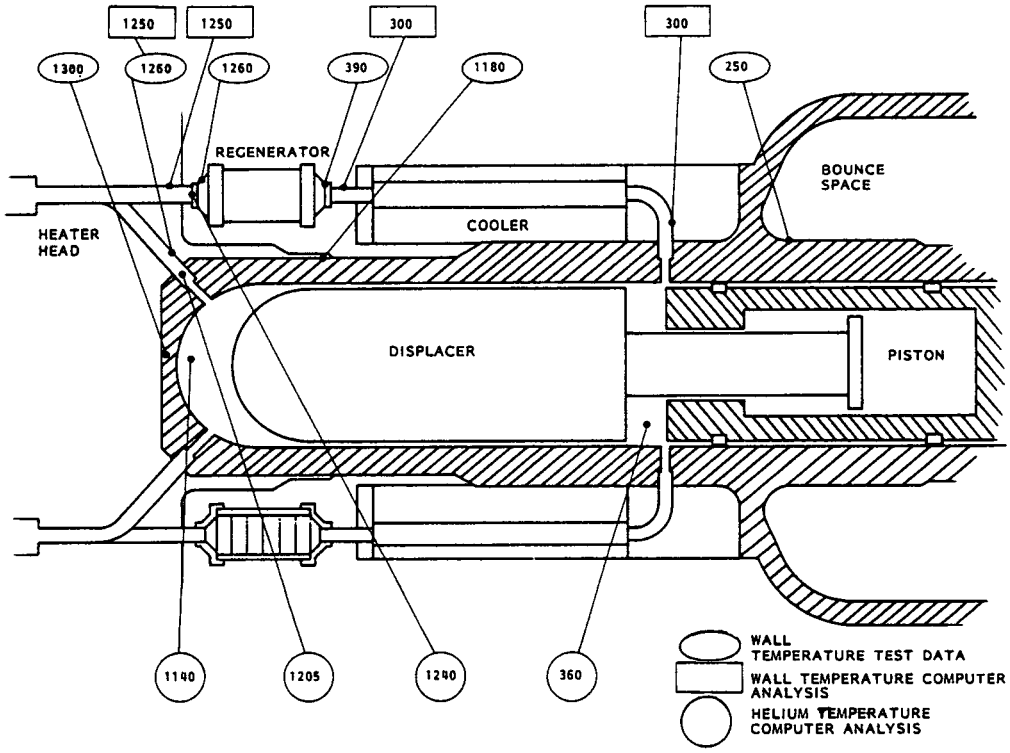

Figure 4-17. Proto 1 Steady State Engine Temperature Correlation

4.3.2.4 Planned Activity for Next Period

Activities planned for the Proto 2 engine during the next reporting period include completion of the detail design, completion and issuance of detail drawings, vendor selection, and start of component fabrication. Approximately 60 percent of the engine fabrication will be completed by the end of June 1979.

4.3.3 LINEAR INERTIA COMPRESSOR

The Proto 2 inertia compressor design was initiated during this reporting period. This was the third iteration in compressor design having been preceded by the Proto 1 and prior to that, the Engineering Research Compressor (ERC) designs. The Proto 2 compressor design will be based on the proven design features of the previous units and incorporate changes identified as desirable by Proto 1 testing and subsequent Proto 2 analysis.

Compressor design effort in this period progressed from completion of Proto 1 test analysis through the design review of the Proto 2 inertia compressor. Design considerations were identified, investigated, analyzed and factored into the mechanical design which was completed up to and including the layout. The following paragraphs discuss each of these areas and present the Proto 2 compressor design.

4.3.3.1 Proto 2 Inertia Compressor Design Requirements

The Proto 2 inertia compressor must meet the mass flow and efficiency requirements of the Proto 1 unit, while being driven by a 1.3 inch engine stroke rather than the 1.7 inch stroke of Proto 1.

The suction and discharge conditions that the compressor is subject to are a function of the ambient temperature and the heat pump system design. Proto 1 operating characteristics were selected for the Proto 2 design as they reflect the influence of ambient temperature conditions. The required compressor operating parameters are listed in Table 4-10. Also listed is the performance goal of 70% isentrophic efficiency for the compressor on the 95° day.

4.3.3.2 Inertia Compressor Description

The basic configuration of the Proto 2 inertia compressor is shown in Figure 4-18. The compresor consists of two double-acting pistons, solidly tied to each other by a connecting rod passing through the compressor mid-housing. There is a compression space at each end of the unit topped by the suction-discharge valve assembly controlling the refrigerant (R22) into and out of the manifold volume. The volumes behind each piston form independent

Table 4-10. Proto 2 Compressor Requirements

Engine - Compressor Stroke	1.3 Inch	
Engine - Compressor Frequency	30.0 Hz	
Compressor Operating Requirements		
	95° Day	0° Day
- Discharge	261 Psig	228 Psig
- Suction	76 Psig	14 Psig
- Mass Flow	540 Lb/Hr	280 Lb/Hr
- Suction Superheat	50° F	50° F
- Efficiency	70%	-

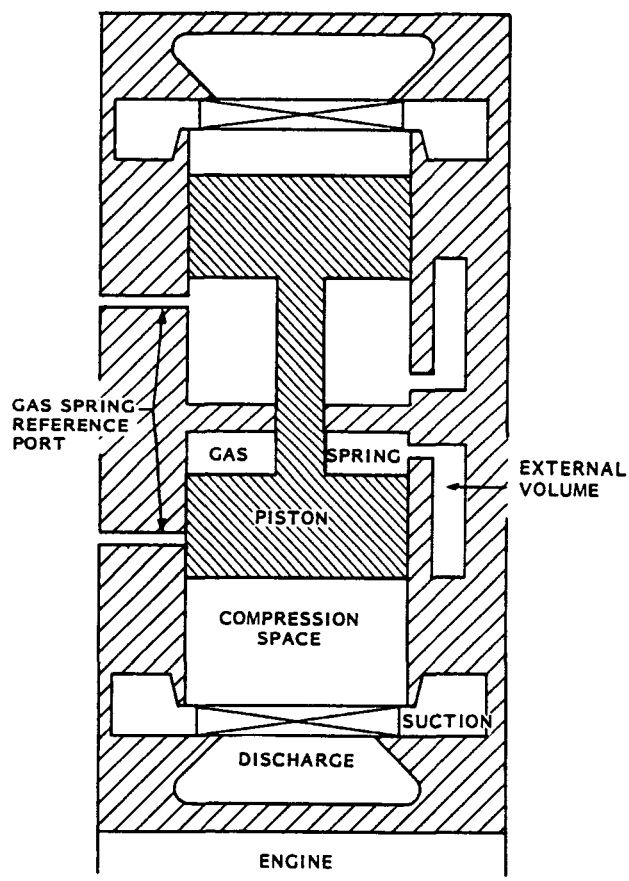

Figure 4-18. Proto 2 Free Piston Compressor Configuration

gas springs, the stiffness of each being controlled by the addition of external volumes and the position along the cylinder of the reference ports. These ports, when opened by the position of the pistons, maintain a controlled pressure in the gas spring, provided by either suction pressure or some pressure provided by a regulating valve system.

The various volumes, cylinder areas, piston strokes and piston masses control the flow characteristics of the compressor when driven by the Stirling engine at particular strokes and frequencies. The gas springs and regulating system limits variations in compressor operation, and allows matching to the engine for different suction and discharge pressures. These pressures result from the different ambient temperature under which the heat pump system operates.

The design parameters for the Proto 2 design are shown in Table 4-11 along with the projected performance on a 95°F and a 0°F day. The breakdown of losses of the compressor is displayed in Figure 4-19. The major losses are due to gas throttling through the valves, manifolds and inlet and discharge lines. The manifold volumes primarily control this loss and any increase in size to lessen the effect is severely hampered by space, weight and design problems. A map of the Proto 2 compressor performance versus refrigerant mass flow and pressure ratio is shown in Figure 4-20.

A layout of the Proto 2 design was shown in Figure 4-9. Flexibility in the Proto 2 hardware, as shown in Table 4-12 was included for fine tuning and matching engine-compressor operation. The proven Proto 1 compressor configuration was retained except for the external suction manifold interconnecting line and the valve clamping method. This is a metallic C-seal on the valve and elastomeric O-ring seals between flanges. This allows loading through the outer flanges rather than the valve, thereby reducing stress levels in the housing. This arrangement along with the assembly clearances are shown in Figure 4-21. Associated surface finishes are given in Table 4-13.

Table 4-11. Proto 2 Compressor Design and Performance Parameters

Design		
Compressor Stroke	2.50	Inch
Piston Diameter	2.125	Inch
Piston Mass	9.65	Lb
Piston Length		
• Cast Iron	5.00	Inch
• Cast Iron - Kennertium	4.00	Inch
Gas Spring External Volume	2.60	$Inch^3$
Gas Spring Ref. Pressure 95° Day	91.0	Psia
Gas Spring Ref. Pressure 0° Day	110.0	Psia
Suction Gas Superheat Temperature	50.0	°F

Performance		
Degree Day (°F)	95°	0°
Suction Pressure (Psia)	91	29
Discharge Pressure (Psia)	276	243
Efficiency (Isentropic),(%)	70	66
Flow Rate (Lb/Hr)	558	284
Power (Kw)	3.22	3.40
Piston Stroke (Inch)	1.70	2.38
Natural Frequency (Hz)	40	35.7

Stress levels in the compressor have a minimum factor of safety of 2.25 for both static and fatigue loading. The design is based on a maximum bounce space working pressure of 80 bars and an acceleration loading of 64 g's (1.4 inch stroke and 30 Hz). For fatigue, the unit has a design life of 15 years or 8.9×10^9 cycles with thermal cycling of 10^6 cycles. Detailed stress analysis has been emphasized for the compressor components in order to meet three requirements while reducing the mass of the unit to a minimum. The compressor housing is expected to weigh 16.5 lb, a significant reduction from the Proto 1 weight of 26 lb.

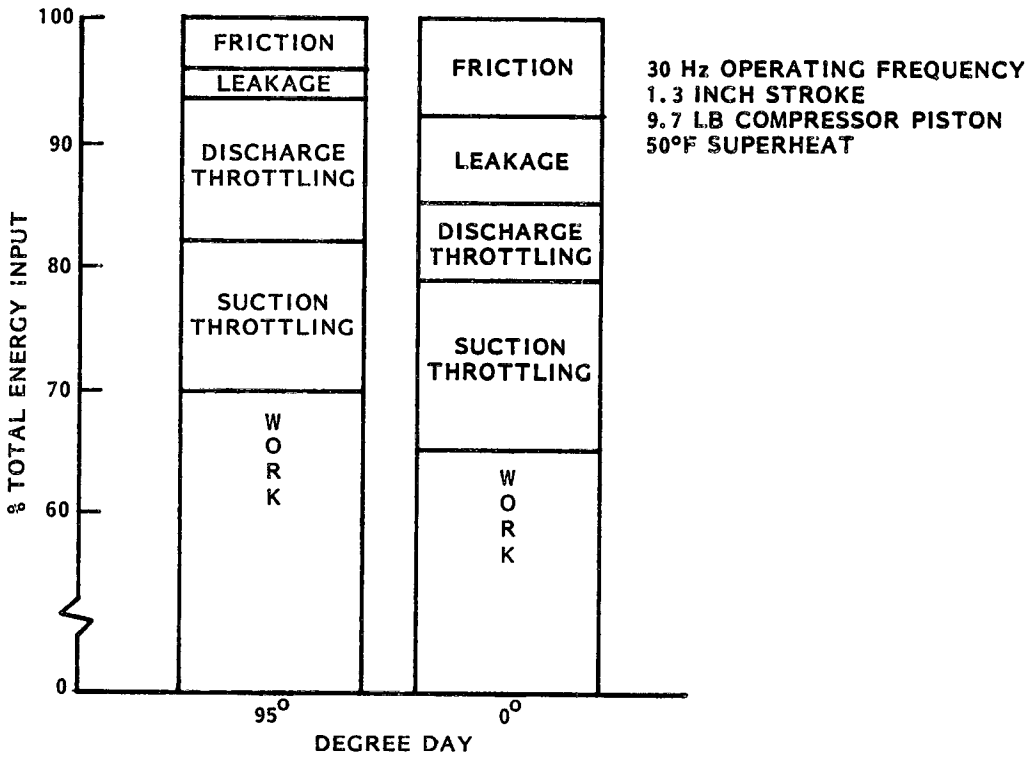

Figure 4-19. Proto 2 Compressor Losses

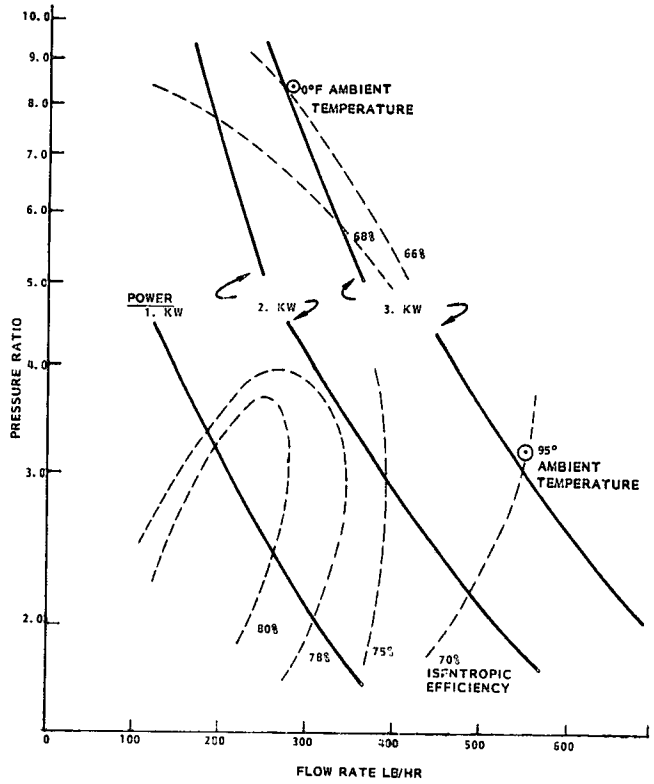

Figure 4-20. Proto 2 Compressor Performance

Table 4-12. Proto 2 Compressor Design Parameters

Parameter	Value
Inertia Mass (Piston Assembly)	9.65 ± 1.5 Lb
External Gas Spring Volume	2.6 ± .3 $In.^3$
Cross Sectional Piston Face Area/Diameter	3.54 $In.^2$/2.125 In.
Cross Sectional Piston Gas Spring Face Area	3.174 $In.^2$
Connecting Rod Diameter/Area	0.6875 In./.371 $In.^2$
Stroke Capacity in Heating Mode	2.50 In.
Valve-Piston Clearance	0.06 In. Max.
Mass of Compressor Housing Assembly	16.5 Lb

Table 4-13. Photo 2 Compressor Component Surface Finishes

Liner Bore	16-20
Piston O. D.	16
Rod O. D.	16
Rod/Pin Hole I. D.	12
Pin O. D.	2-5
Piston/Pin Hole I. D.	12
Float Seal Ring Sides	16
Float Seal Ring Bore	16

The same materials used for Proto 1 have been used in the Proto 2 design with the exception of the tubular springs. A different primary material, AM-362, was determined more suitable: however, the PH 15-7 Mo has been retained as a back-up. The materials are listed in Table 4-14. The piston material is listed as A-35 cast iron; however, this only forms the main body of the piston. A tungsten alloy (Kennertium W-10) forms a head or cap piece on this body to obtain a shorter length assembly and compressor housing with a higher material density. A piston fabricated entirely of cast bronze may also offer advantages and will be examined as an option.

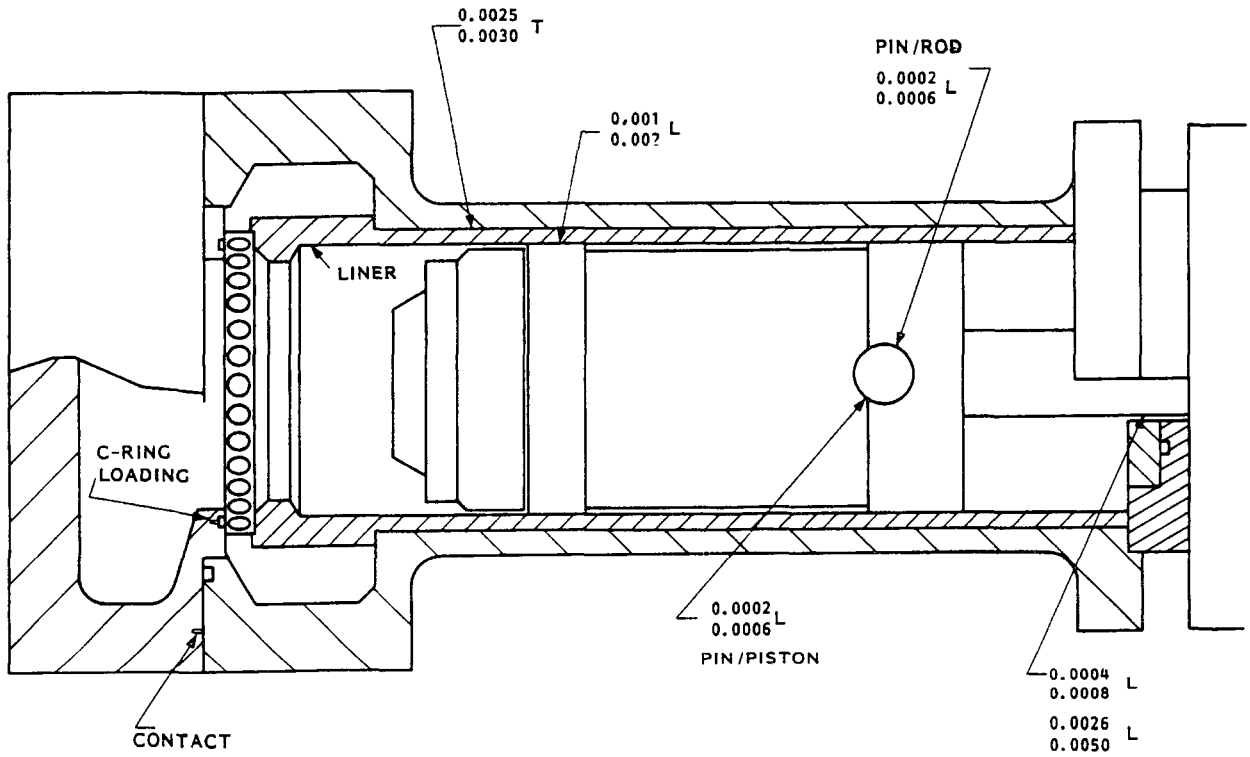

Figure 4-21. Proto 2 Seal Arrangement and Assembly Clearances

4.3.3.3 Component Design Selection

Compressor

Photo 1 component and system level testing identified several features of the compressor design that degraded the overall performance of the unit. These features include: those which increased the input power required by the compressor and decreased the operating efficiency of the compressor; those which caused a mismatch between the engine and compressor; and, those which were mechanical problems. Most of these problems have been discussed extensively in previous reports. Therefore, only brief descriptions of how they influenced the Proto 2 design are given here.

The major contributor to increased compressor power in Proto 1 is the degree of superheating occurring in the refrigerant suction gas. This heat transfer occurred in several areas; the bounce space to suction tubular springs, compressor housing to suction manifolds and

Table 4-14. Proto 2 Compressor Materials

Component	Material
End Caps	6061-T6 (B12H26J)
Outer Cylinder	6061-T6 (B12H26J)
Cylinder Liner	CG-40 Cast Iron Meehanite
Piston	A35 Cast Iron (B2A1-F1)
Connecting Rod	A130 (B5F16A2)
Rod Pin	C1095 (B4E11B3)
Floating Seal Ring	A35 Cast Iron (B2A1-F1)
Valve Assembly	Tyler, CACPD
Piston Ring	Cast Iron Ferrox Coating
O-Ring	Neoprene
Refrigerant Oil	Tyler, CACPD (Heat Pump Oil)
Spring Tubes	Almar 362 (Alt: PH 15-7M0 (RH 1100))
Pressure Vessel Components	Low Carbon Steel

compressor housing to the manifold interconnecting lines. Bounce space to suction line heating has been addressed by insulating the tubular spring lines. Proto 2 modifications to the engine centering mechanism will reduce venting of hot working gas into the bounce space, thereby reducing the bounce space temperature and decreasing this loss. Supplementing this will be the insulation of the manifold interconnecting line to reduce heat transfer to the suction gas flowing to the lower compressor cylinder. The compressor efficiency (isentropic) and operating characteristics are controlled by piston diameter and length, compressor stroke and by the lubrication, sealing and leakage losses. To address these areas in the Proto 2 design, larger piston diameters, shorter strokes, use of piston rings, and larger manifolds were investigated.

Several different compressor configurations were arrived at by treating the cylinder diameter and the compressor stroke as independent variables and the piston mass and gas spring external volume and reference pressure as dependent variables. In this way the requirements in Table 4-10 would be met at both the 95°F day and the 0° day. Two cylinder diameters were investigated; 1.875 inches (Proto 1) and 2.125 inches (arrived at via mechanical design considerations). The larger diameter compressor performed with higher efficiencies and had a higher natural frequency, desireable for engine-compressor matching. These two characteristics offset minor the negative aspects in mechanical design, and lead to the selection of the 2.125 inch diameter cylinder for the Proto 2 design. In conjunction with the larger diameter piston, shorter operating strokes were also investigated. Shorter strokes produce the same effect as a larger diameter: higher efficiency and higher natural frequency. Therefore, the compressor stroke was reduced to the limit permitted for end of stroke clearance; namely 2.50 inches.

It was found that matching of the Proto 1 compressor with its engine was adversely affected by the overweight Proto 1 compressor housing. (See Section 2.4 on System Matching.) This problem was addressed in the Proto 2 compressor design by reducing the compressor housing weight to a minimum through detailed stress analysis supported weight optimization. The hardware problems encountered in the Proto 1 design primarily occurred in instrumentation. These were also addressed in the Proto 2 design through adequate instrumentation to alleviate sealing and assembly problems.

Gas Spring Regulator

Regulation of the gas spring reference pressure is required on low ambient temperature heating days. Under these conditions the suction pressure drops significantly, thereby lowering the natural frequency of the compressor. The decreased natural frequency results in operating frequency hunting, and/or operation in a second harmonic of the engine-compressor unit. This condition leads to overstroke of the engine and possible mechanical damage to the engine. The most satisfactory approach to correct this is the regulation of the gas spring reference pressure which limits the range of variation in compressor natural frequency.

A regulating valve system was developed for the Proto 1 compressor. A similar design was investigated for Proto 2. Figure 4-22 displays the relationship between suction and discharge conditions existing for the Proto 1 system. Initial analyses had predicted the linear relationship shown, but subsequent testing and analysis resulted in the conditions indicated. These conditions were then utilized for the Proto 2 design. A regulated pressure of 110 psia was selected for the low temperatureheating mode days.

The regulating valve system to provide this reference pressure is expected to be very similar to the Proto 1 design. The only major change will be the substitution of a bleed-line from the gas spring volume to suction conditions rather than a pressure relief valve. This will insure maintenance of the reference pressure at or above suction pressure and will allow a minimal amount of gas flow into the gas spring volume. The gas flow is necessary to assure adequate lubrication of the gas spring volume with the oil transported by the freon.

Tubular Springs

Design of the Proto 1 tubular coil springs serving as discharge (1) and suction (3) lines for the compressor were re-examined for Proto 2. The Proto 1 tubular coils met design requirements but reliability problems had been encountered with the tube seam weld. This problem was solved with tighter quality controls and the identification of a material which could be fabricated into seamless tubing.

The tubular spring is subject to the following environmental conditions:

External ambient:	helium
Internal ambient:	R22 at 27 psia (minimum)
Maximum temperature:	$300^{o}F$
Cyclic Load:	$\pm .65$ inches at 30 Hz
Life:	8.9×10^{9} cycles

The tubular coil is fabricated of 0.5 inch outside diameter/0.035 inch wall thickness tubing. The coils have a mean diameter of 6.25 inches and a pitch of 4.42 inches. The tubing is

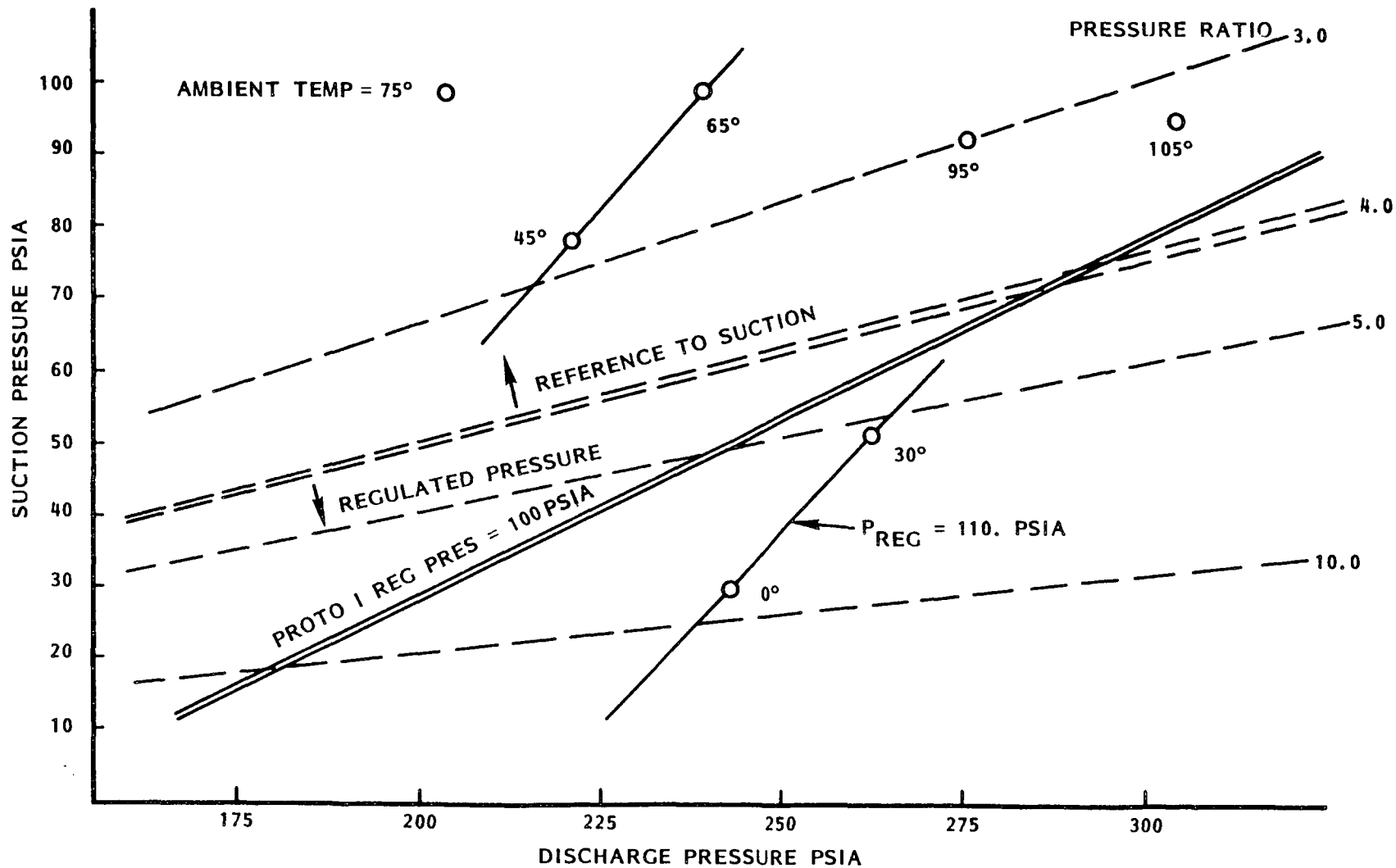

Figure 4-22. Proto 2 Pressure Regulation

insulated with 0.125 inch thick butyl rubber insulation. The coil has a spring rate of 61.8 lb/in and, with the insulation, a natural frequency of 74 CPS.

Two materials were selected for the coils: Almar 362 and the Proto 1 material PH 15-7 Mo with a RH 1100 heat treatment. The Almar 362 was selected as the primary material because it has higher strength and endurance levels considering notch sensitivity. It also can be fabricated as seamless tubing and requires fewer steps in fabricating and heat treating the coil. A tradeoff comparison of the materials is given in Table 4-15.

4.3.3.4 Planned Activity for Next Period

The Proto 2 compressor design will be completed during the next reporting period. All compressor detail and assembly drawings will be completed and hardware fabrication will be nearing completion. Further analysis and evaluation of the compressor regulator is planned in this period under the add-on program to the contract. An improved design of the regulator will be based on further investigations of the system operation parameters. As part of this effort, the various computer programs for compressor analysis and data reduction will be updated to assist in the system analyses and for component testing data analysis.

Table 4-15. Tubular Spring Coil Material Comparison

	PROTO 2		PROTO 1
	Almar 362	PH 15-7M0 RH 1100	PH 15-7M0 RH 950
Ultimate Tensile Strength, PSI	200,000	180,000	200,000
0.2% Yield Strength, PSI	185,000	160,000	175,000
Notch Sensitivity, NS/YS	1.0	0.96	0.47
Endurance Limit (10^8 Cycles), PSI	95,000	75,000	106,000
Material Cost, $/Ft	5.00	4.00	4.00
Fatigue Factor of Safety	3.5	2.7	1.86

4.3.4 CONTROLS

The design of the Proto 2 control system was initiated during this reporting period. Lessons learned from the recently completed Proto 1 tests were reviewed and incorporated into the evolving Proto 2 design. The primary design requirements for the Proto 2 controls were identified and the mechanical interfaces with the HAHP components determined.

The control design configuration was evaluated as part of the Proto 2 design review held in December. Suggestions offered during the review have been analyzed and incorporated into the design. Detail design of the controls will be conducted in the next reporting period.

4.3.4.1 Control Design Requirements

The overall function of the heat activated heat pump control subsystem is to provide regulated heating or cooling of the conditioned space. The requirement for heat pump operation will be sensed, initiated and terminated by a room thermostat. The thermostat will also provide the user the capability to select the derived mode of operation - cooling or heating. The mode selection portion of the controls provide the appropriate signals to both the refrigerant and hydronic loop switching valves which in turn control the space conditioning.

The control design requirements for the Proto 2 HAHP can be divided into two basic categories. One group contains all primary control functions while the second group consists of various safety circuits. Delineation of the specific requirements and features of the primary controls and safety circuit are presented in Tables 4-16 and 4-17.

Table 4-16. Primary Control Requirements

Indoor Thermostat
Heating-Cooling Mode Selection
On-Off Sequencing
- Initial Combustor Purge - Blower On
- Open Gas Valve - Ignition
- Flame Detection
- Engine Starting
- Close Gas Valve - Turn Off Fire
- Shutdown Purge
Indoor, Outdoor Fan and Pump Control
Defrost Control
Dual Firing Rate Controls

Table 4-17. Safety Control Requirements

Fin Overtemperature
Piston Over Stroke
Refrigerant High Pressure
Refrigerant Low Pressure
Ethylene Glycol Low Flow
Blower Operation
Flame Detection

4.3.4.2 Controls Description

Proto 2 control subsystem is designed for semiautomatic operation for the systems test unit and fully automatic operation for the demonstration (field test) unit. Modular components will be utilized along with integrated circuits for logic and relays for power switching. The Proto 2 design is being developed from the Proto 1 configuration and will utilize General Electric "Weathertron" heat pump design concepts where appropriate.

Ladder diagrams for the controlled components are displayed in Figures 4-23 and 4-24. The safety interlock circuiting and the sequencing circuits are illustrated schematically in Figures 4-25 and 4-26.

Primary Controls

Upon determination by the thermostat that the heat pump operation is required, operation begins with firing the combustor to start the prime mover. However, before operation can be initiated, all safety control interlocks must be in the normal or "run condition." A description of the safety circuits is presented in the following section.

First, the combustor blower is turned on to purge the combustor with air. At this time the engine coolant pump and outdoor fan are also started. After a purge cycle time delay, ignition is activated. This opens the gas valve and normally ignition occurs within seconds. If the ignition system does not sense a flame within the preset time, the igniter is de-energized and

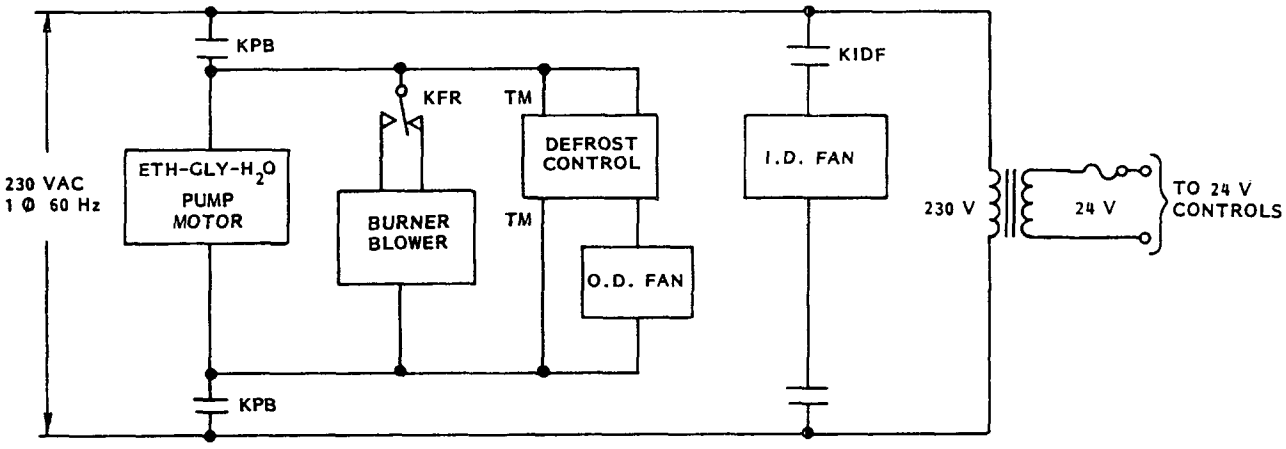

KPB = PUMP AND BLOWER RELAY
KFR = FIRING RATE RELAY
KIDF = INDOOR FAN RELAY

Figure 4-23. Primary Controls Ladder Diagram (230 V)

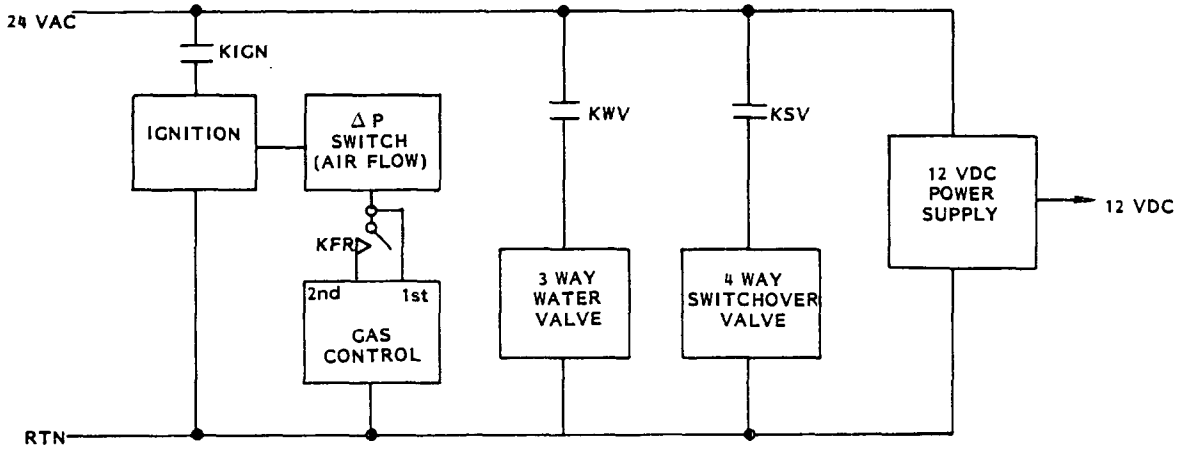

KIGN = IGNITION RELAY
KWV = WATER VALVE RELAY
KSV = SWITCHOVER VALVE RELAY

Figure 4-24. Primary Controls Ladder Diagram (24V)

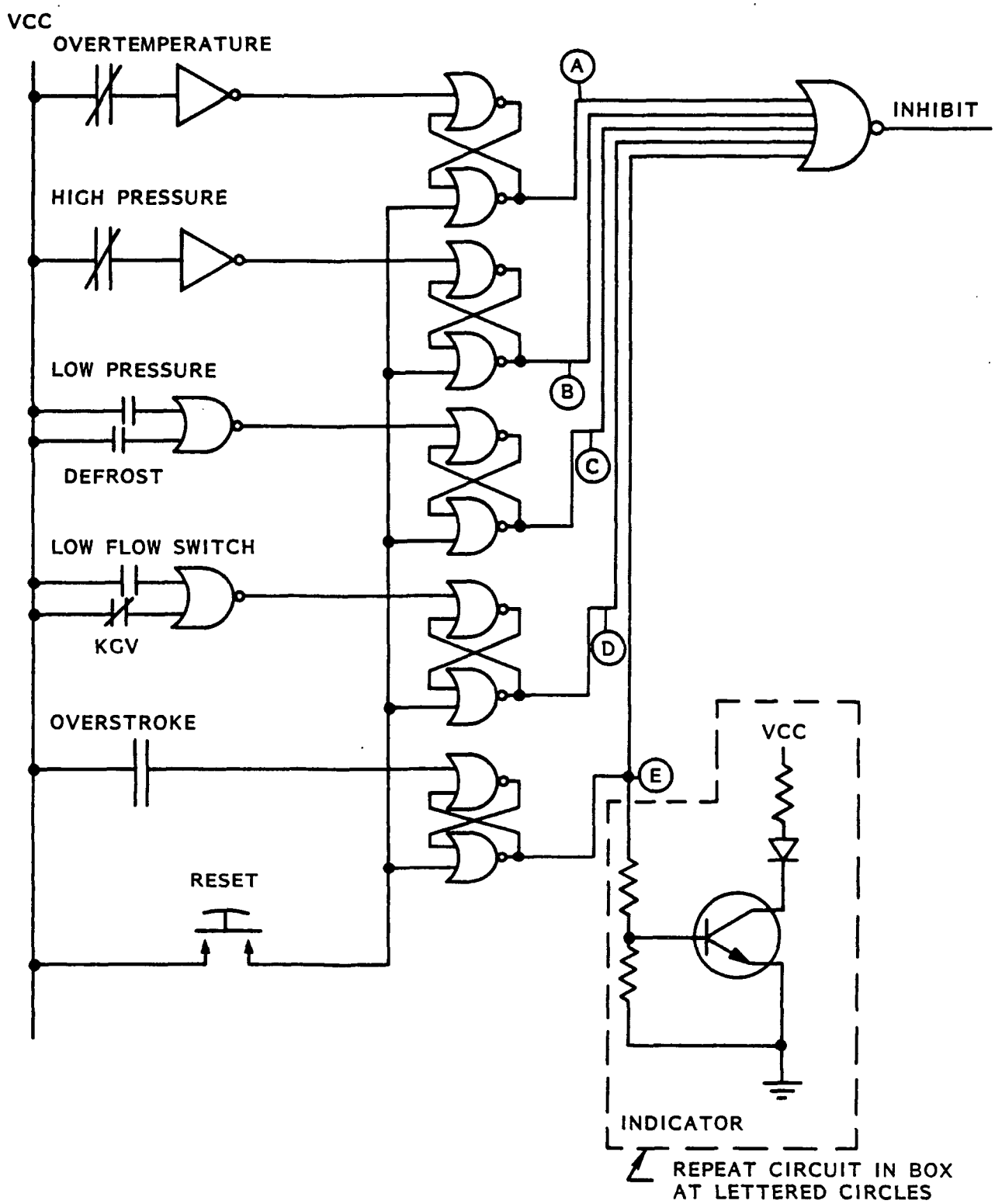

Figure 4-25. Safety Interlock Diagram

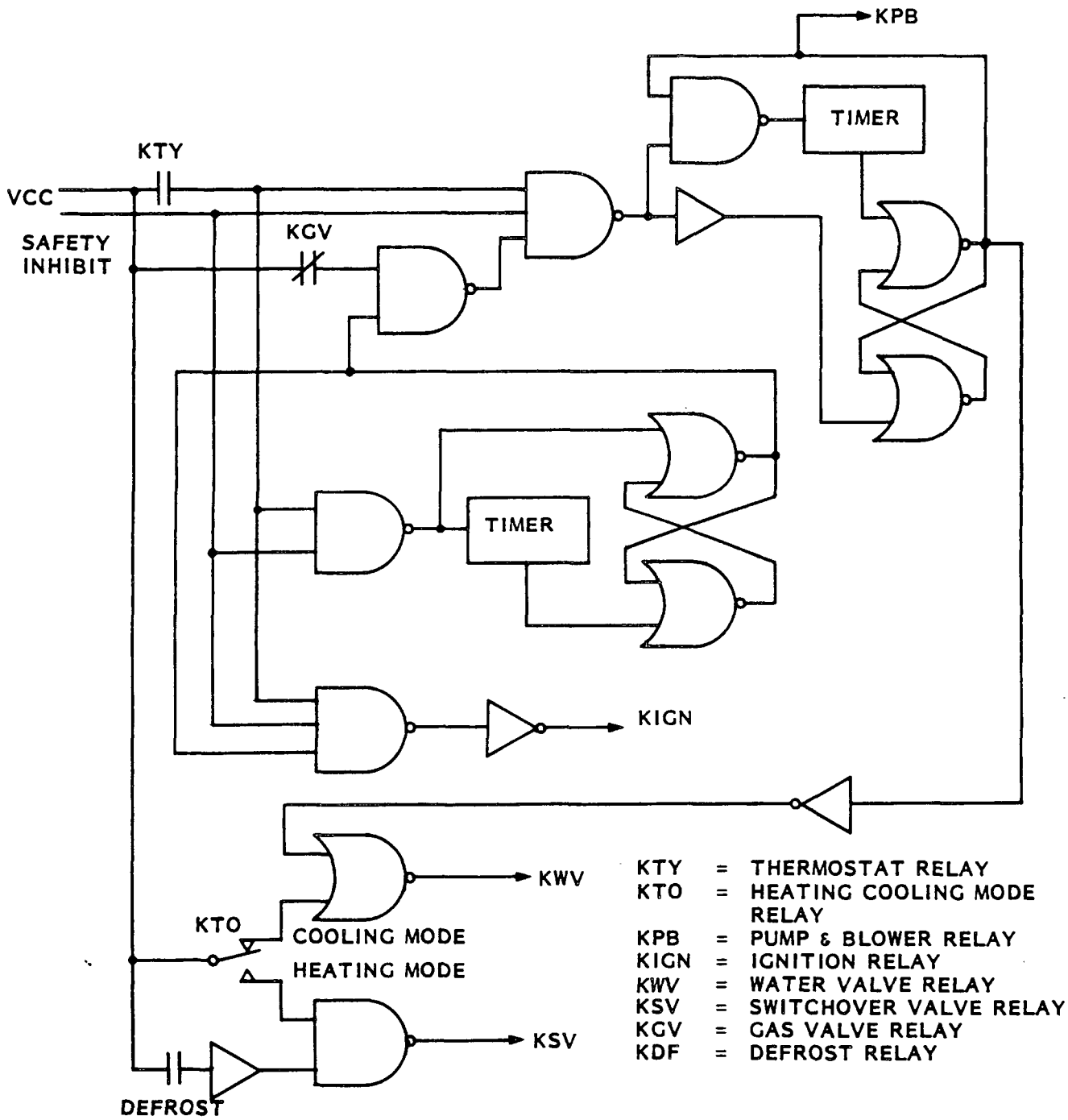

Figure 4-26. Sequence Circuit Diagram

the gas valve is closed. The purge cycle is repeated in order to prevent ignition of possible accumulation of gas, after which the start cycle is reinitiated.

Upon ignition, a time delay is provided to allow the Stirling engine hot side components to reach minimum starting temperatures. The magnetic starter system is then energized to begin the relative motions of displacer and power piston leading to engine startup.

Another time delay is provided before the indoor unit blower is turned on. This is necessary to allow transport time for the conditioned refrigerant and/or hydronic loop fluids to reach the indoor unit.

When the indoor control thermostat is satisfied, the control system will turn off the ignition, which, in turn, closes the gas valve. As the temperature of the engine decreases, engine motion decays to a stop. A time delay circuit is included to allow the combustor blower to purge the combination assembly of all residual gases. The fans and coolant pumps are subsequently de-energized after which the system is ready for another complete cycle.

The current program plan calls for the startup of the Proto 2 unit to be semi-automatic. The controls will sequence the blower, pump, fans, and ignition, but engine starting will be accomplished by manual operation of the engine start system by an operator. Details of engine starting with the magnetic starter are to be determined during Proto 2 testing. This would include determination of the proper excitation pulse shape and frequency. After these characteristics are established, design and fabrication of the automatic starter controls for the demonstration unit will be accomplished as part of the add-on acceleration program for the HAHP.

Proto 2 controls will have provisions for operating the burner at two different firing rates.

Low Firing Rate @ $> 30^{o}F$ but $< 85^{o}F$

High Firing Rate @ $< 30^{o}F$ and $> 85^{o}F$

The two rates will allow a better match between the heat pump characteristics and the load characteristics. The dual firing rate capabilities will be implemented with a two stage gas control valve, a two speed combustion blower and two outdoor temperature switches. Figure 4-27 illustrates the dual firing rate controls circuit.

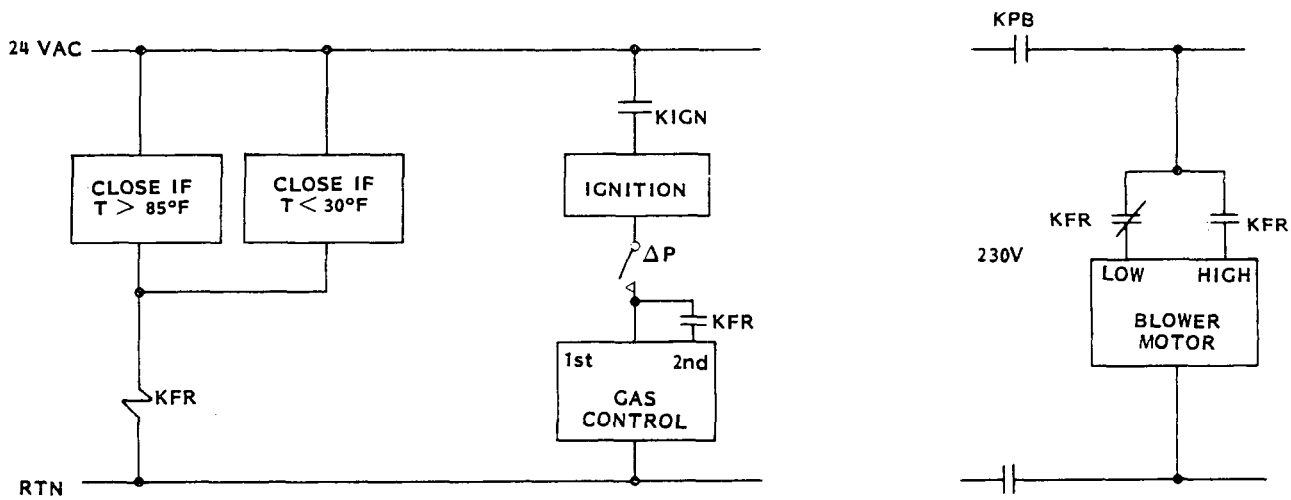

Figure 4-27. Dual Firing Rate Controls Diagram

The Proto 2 controls circuits will be located in the area surrounding the outdoor unit fan shroud. The side panels will be removable to provide access to the controls. The control box/fan package will have connectors to allow removal for service of components inside the outdoor coil envelope.

The control circuitry will incorporate provisions for indicating which safety circuits have interrupted system operation and to show the status of major components during normal operation. They will be visible at the lower interface panel of the outdoor unit (house side).

Safety Controls

HAHP operation will be terminated and/or operation prevented if any of the safety controls indicate an abnormal condition. A brief description of each safety circuit is discussed below.

Refrigerant High Pressure. A pressure switch will be located in the compressor discharge line. An indication of high pressure will result in termination of heat pump operation.

Refrigerant Low Pressure. A pressure switch will be located in the compressor section line to guard against a loss of refrigerant due to a leak in the system piping. Activation of this switch will terminate heat pump operation.

Hydronic Loop Low Flow. A flow switch is located in the discharge of the hydronic loop coolant pump. Loss of flow (for any reason) will cause the switch to terminate heat pump operation.

Combustor Air Flow Indicator. A differential pressure switch will monitor the pressure drop across the combustor proper. The ignition system will only operate when the combustor blower is activated; i.e., combustion air is flowing. In the event the natural gas valve is open and the blower is inactive (abnormal condition), there will be insufficient pressure differential from the gas flow alone to arm the system, preventing ignition.

Fin Overtemperature. A Cromel-Alumel thermocouple will be installed on a selected heater head fin. The thermocouple will be connected to a circuit which will open a relay contact in the ignition system if the indicated temperature exceeds a nominal set point of 1650°F. This would then stop the operation of the heat pump.

Piston Overstroke. The power piston motion will be monitored with a linear variable displacement transducer (LVDT). Should the signal exceed the desired limits, operation of the heat pump will be terminated. However, a time delay feature will be used to deactivate the safety circuit during startup: transient piston motion excursions will be tolerated during startup.

Flame Detection. A flame detector is incorporated in the ignition circuitry to guard against the loss of or non occurrance of ignition when natural gas is flowing. An indication of loss of flame will close the gas valve and cause a system shutdown. The circuit senses a diode to ground between the flame rod and the sheet metal housing via the conduction of ions generated by the flame.

4.3.4.3 Planned Effort for Next Period

The controls detail design will be initiated in the next reporting period. Current planning will have this activity follow the design phase of the Combustor/FPSE/ Compressor subsystems. It will run concurrently with the design of the Air Handler units. Design of the controls will be completed in the next reporting period and fabrication of the control components will be initiated.

4.3.5 INDOOR AIR HANDLER AND OUTDOOR UNIT

Design of the Proto 2 indoor air handler and outdoor unit was initiated during this reporting period. Proto 1 designs established component sizing criteria, and exhibited performance feasibility and test flexibility. Preliminary Proto 2 air handler and outdoor unit designs were based upon the Proto 1 acquired experience. The designs also incorporated design improvements currently available in advanced commercial components and application techniques. The designs are thus an evolutionary step toward product design maturity.

4.3.5.1 Design Requirements/Considerations

In addition to the Proto 2 design requirements presented in Section 4.2, the following design considerations strongly influenced the design approach for the Proto 2 air handler and outdoor unit

Proto 2 Design Considerations

Marketability Factors	Product Design Factors
• Performance (ARI listable)	• Cost
• Price	• Commonality
• Quality	• Producibility
• Size/Styling	• Standardization
• Noise	• Building Block Flexibility
• Safety (UL listable)	• Shipping
• Serviceability	• Installation

4.3.5.2 Indoor Unit Description

Selection for the Proto 2 indoor unit has been completed. The basic air handler is a GE Model GWE936C100A0. It is currently used in high efficiency GE installations. This standard configuration utilizes upflow air direction with optional side, rear, and/or bottom return air entry. The hydronic portion added to the unit includes a standard GE coil and coil enclosure which mounts directly to the discharge air end of the air handler. The selected air handler configuration is shown in Figures 4-28 and 4-29.

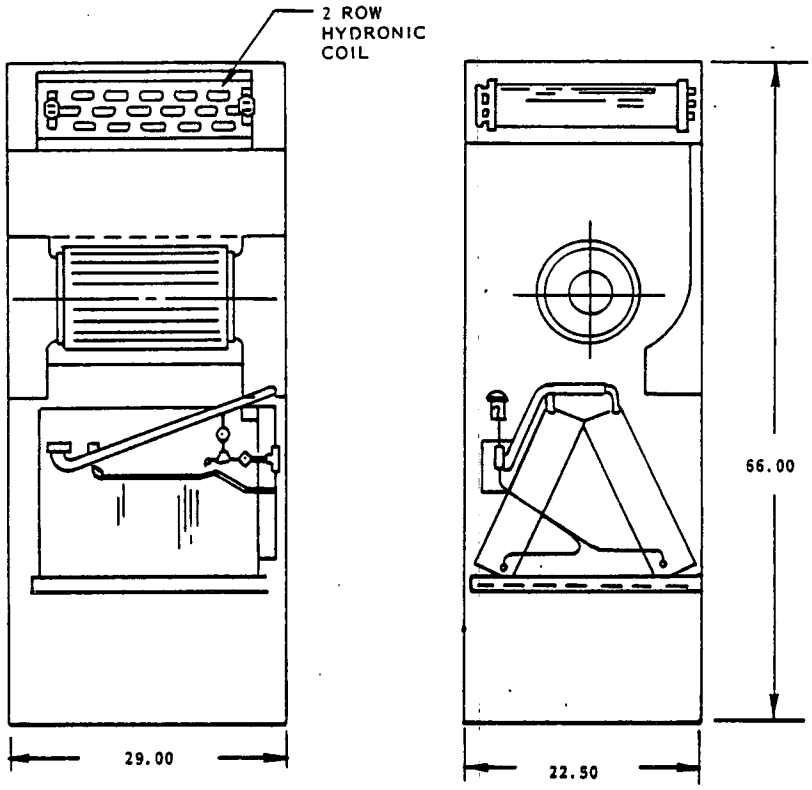

Figure 4-28. HAHP Proto 2 Indoor Unit

The Proto 2 design improvements over the Proto 1 unit include a higher efficiency air flow system, an improved refrigerant coil circuit, and a reduced overall noise level. Standard features of the selected air handler are summarized in Table 4-18.

Design modifications of the standard unit were required to provide in-house and site test flexibility. These include incorporation of a manual refrigerant flow control valve (externally accessible) in parallel with the automatic flow control valve to allow for manual flow stabilization of the refrigerant system (if required); rewiring of the controls to allow for remote manual operation (thermostat signal simulation); and, the use of temperature and pressure sensors routed to externally accessible panels for extracting data for performance/diagnostics purposes.

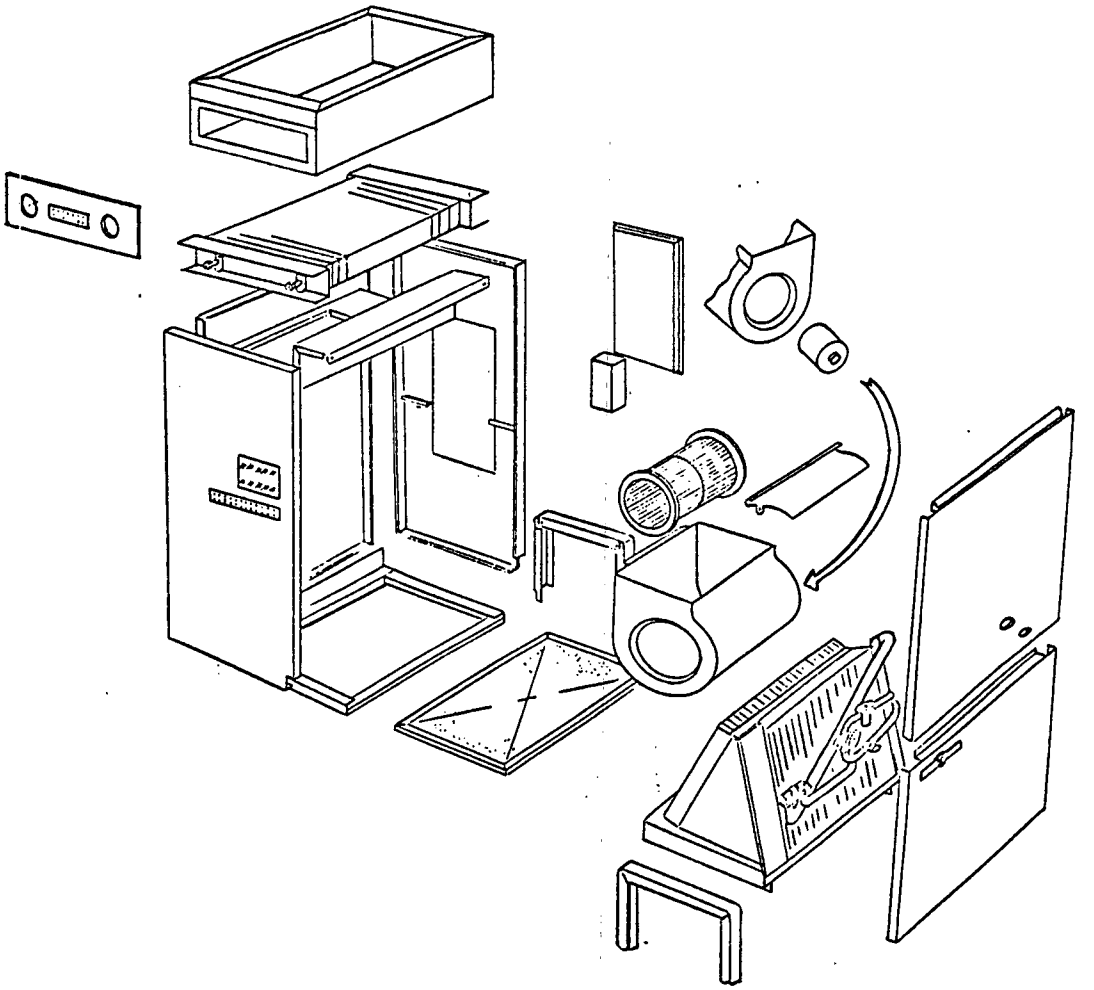

Figure 4-29. HAHP Proto 2 Indoor Unit - Assembly View

4.3.5.3 Outdoor Unit Description

The preliminary Proto 2 outdoor unit configuration is shown in Figure 4-30. The selected configuration retains all of the positive features of the Proto 1 unit and incorporates design improvements in the areas of size, noise, parasitics, controls, producibility, service, and appearance.

The unit is comprised of several main compartments housed within a single structure. The structure features a welded angle base with support members for key components. Tubular framing is built-up from this base to provide support for the fan system, controls, and appearance panels. Formed sheet metal panels provide the barriers between compartments and sections of compartments and are designed to act as an integral part of the structure.

Table 4-18. Indoor Air Handler Features

- Direct drive 8 pole, 230V/ 1 ϕ /60 Hz, 2 speed motor
- High efficiency 10" x 10" blower
- Thermal expansion valve
- 200/230 volt primary and 24 volt secondary transformer
- Fan motor relay mounted and wired
- Plug for accessory speed change relay
- Quick-attach refrigerant couplings
- Slide out blower assembly
- Electric supplementary heat compartment
- Aluminum plate fin coil, copper tubing
- Re-oilable blower motor
- Insulated cabinet
- Heavy gauge welded steel cabinet
- Brown baked enamel finish
- Duct flanges
- Knockouts for refrigerant lines, drains, and electrical entrance.

The machinery compartment houses the engine/compressor assembly, all gas control components, and the active and adjustable refrigerant and hydronic components. The engine/compressor assembly is mounted on its own stand in one corner of the compartment. The stand is designed to pivot outward for service of the combustor without interrupting refrigerant and hydronic connections by using flexible hose service loops. The hydronic and refrigerant components are located on the perimeter of the machinery compartment, providing easy access for adjustment and service. All key refrigerant and hydronic components are standard components installed using conventional approaches. The hydronic loop water pump and its mounting technique have been upgraded from the Proto 1 approach to reduce noise.

The machinery compartment is taller than the other compartments to accommodate the current instrumented engine/compressor height. The extended height area of the machinery compartment has not been used for other components so that as the engine/compressor height

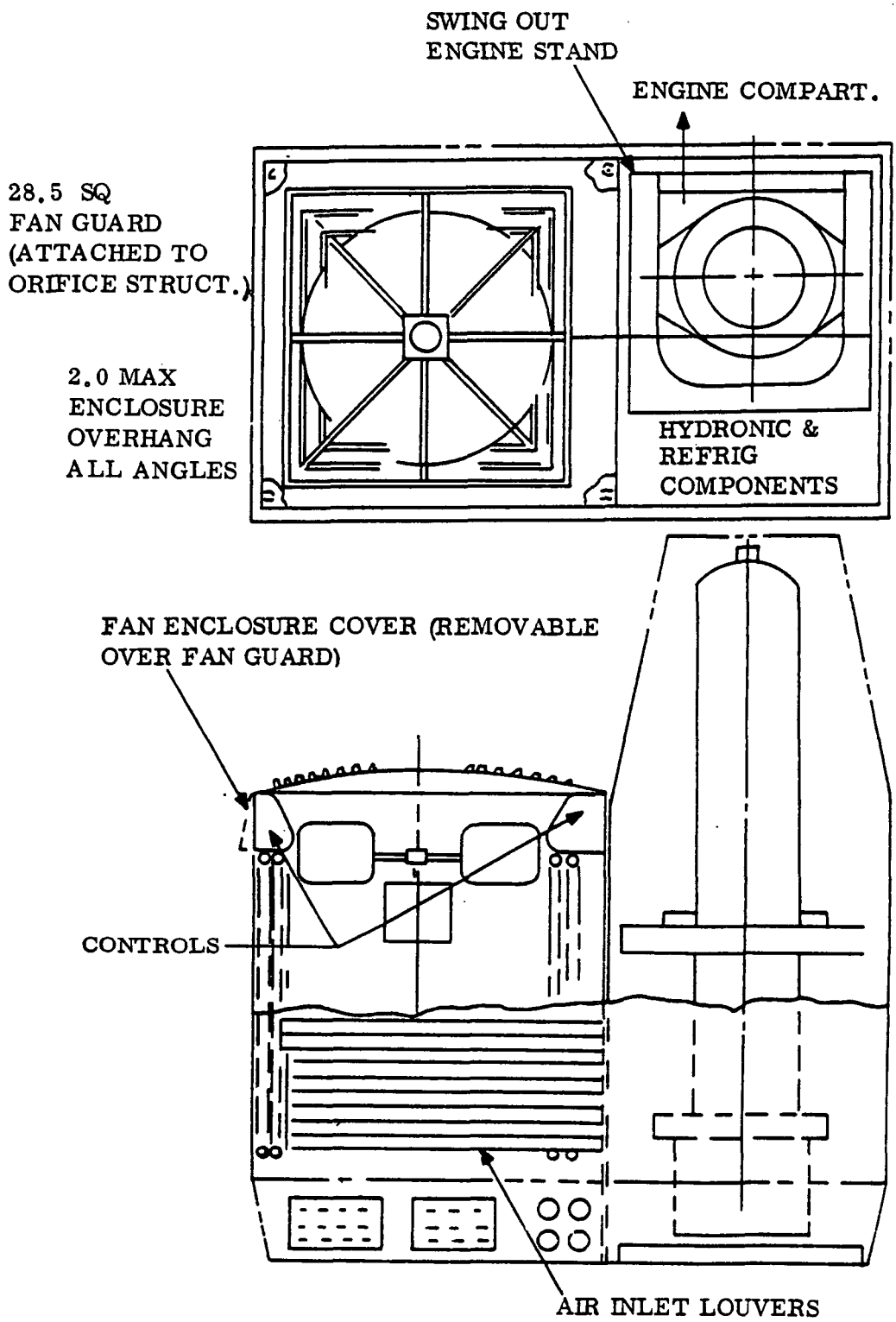

Figure 4-30. Preliminary Proto 2 Outdoor Unit Selected Configuration

is reducednstrumention removal, design improvements, etc.) the package height can be redut relocating other components.

The machpartment is acoustically and thermally insulated from the outdoor environmentate removal is provided by drain holes in the base plate of the structure. Ver provided by the use of the drain holes in the baseplate and penetrations in the barent to the fan/coil compartment.

The fan/ctment is divided into three areas. The lower area accommodates the interfacesdevelopment test facility,indoor airhandler unit plumbing, and electrical and instr lines. Easy access is provided externally to hook-up pressure and temperatnentation through the use of interface panels. The center section of the compartns the refrigerant and hydronic coil assemblies and is isolated from the lower sec compartment by a sheet metal panel which also provides the coil support strue coils are standard GE spine fin tubing, helically wound into a two row square cn with the hydronic coil wound inside and behind the refrigerant coil. Both the t and hydronic coils utilize stacked multi-circuits which provide proper circuit ler the various operating modes.

The coiled within the compartment to allow air to be drawn from all four sides in a proporlanced fashion. An added feature of the refrigerant coil assembly is the inclusiorending tubing circuit which runs along the coil support base. It acts as a subcoolcoling mode and utilizes the hot liquid temperature in the heating mode to help preild-up on the coil support panel.

The fand controls are located in the upper portion of the compartments. The fan is mountical top discharge from the unit. The fan, orifice, and motor were selected fgh efficiency GE Weathertron line. The controls are housed in the void perimerrounding the orifice. The controls are completely enclosed in sheet metal tu safe, weatherproof barrier. This location also provides convenient top access nent and service.

An appearance design for the outdoor unit was initiated in conjunction with the mechanical design. The preliminary appearance concept selected is shown in Figure 4-31. This configuration depicts the two main compartments previously discussed. The louvered area represents the fan/coil compartment, while the taller, solid area is the machinery compartment. The two compartments are aesthetically integrated to present a finished appearance. Height appearance is minimized through the use of tapered contours on the base and top sections. Preliminary panel material selection is Kydex, which lends itself to a vacuum-forming process. This material is easy to form into the desired panel shapes and has excellent weatherability properties for outdoor use.

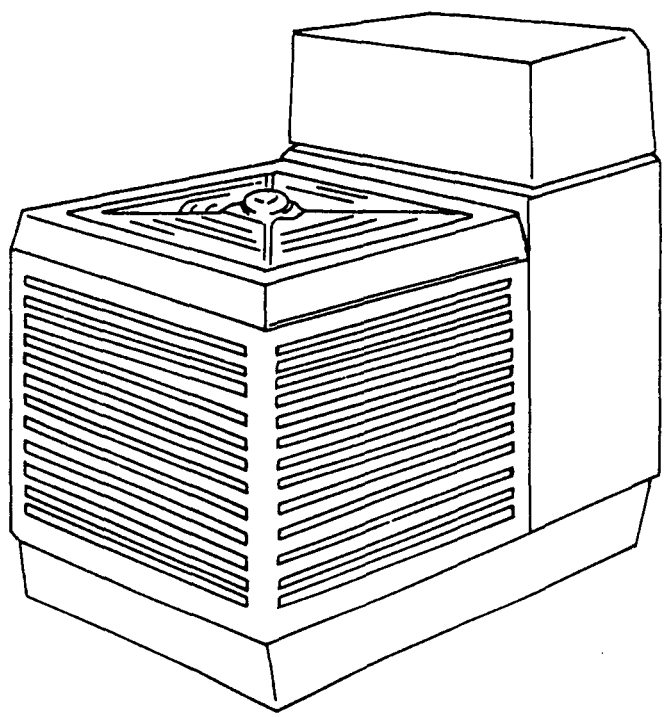

Figure 4-31. HAHP Proto 2 Outdoor Unit Preliminary Appearance Concept

4.3.5.4 Planned Activity For Next Reporting Period

During the next reporting period, the indoor air handler and outdoor unit designs will be completed, and their fabrication will be initiated. In addition, optional outdoor unit appearance designs will be prepared by General Electric's Industrial Design Organization, and a final appearance approach will be selected. Definition of the instrumentation to be incorporated in the outdoor unit will also be completed, and the unit test program plans will be established.

GENERAL ELECTRIC

Space Division

Headquarters: Valley Forge, Pennsylvania ☐ Daytona Beach, Fla. ☐ Evendale, Ohio

☐ Huntsville, Ala. ☐ Bay St. Louis, Miss. ☐ Houston, Texas ☐ Sunnyvale, Calif.

☐ Beltsville, Md. ☐ Tacoma, Wash. ☐ Palmdale, Calif. ☐ Bedford, Mass.

☐ Washington, D.C. Area