FILE COPY
DO NOT REMOVE

GE DOCUMENT NO. 80SDS4230

DEVELOPMENT AND DEMONSTRATION OF A STIRLING/RANKINE HEAT ACTIVATED HEAT PUMP

CONTRACT NO. EC-77-C-02-2911

SEMI-ANNUAL REPORT

NO. COO/2911-6

JULY THROUGH DECEMBER 1979

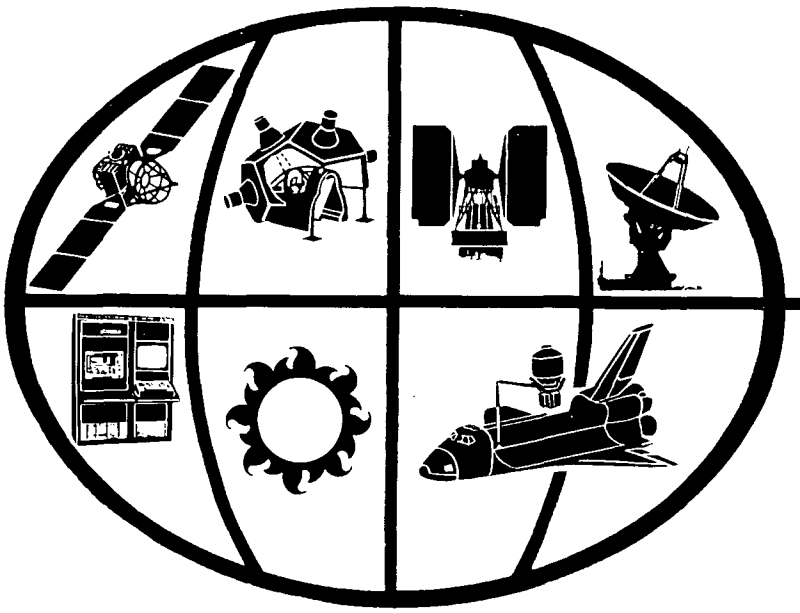

space division

GENERAL ELECTRIC

DISCLAIMER

This book was prepared as an account of work sponsored by an agency of the UnitedStates Government. Neither the United States Government nor any agency thereof, nor any of their employees makes any warranty, express or implied, or assumes any legal liability or responsibility for the accuracy, completeness, or usefulness of any information, apparatus, product, or process disclosed, or represents that its use would not infringe privately owned rights. Reference herein to any specific commercial product, process, or service by trade name, trademark, manufacturer, or otherwise, does not necessarily constitute or imply its indorsement, recommendation, or favoring by the United States Government or any agency thereof. The views and opinions of authors expressed herein do not necessarily state or reflect those of the United States Government or any agency thereof.

GE DOCUMENT NO. 80SDS4230

DEVELOPMENT AND DEMONSTRATION OF STIRLING/RANKINE HEAT ACTIVATED HEAT PUMP

CONTRACT NO. EC-77-C-02-2911
SEMI-ANNUAL REPORT
NO. C00/2911-6
JULY THROUGH DECEMBER 1979

GENERAL ELECTRIC
SPACE DIVISION
Valley Forge Space Center
P. O. Box 8555 • Philadelphia, Penna. 19101

TABLE OF CONTENTS

Section			Page
1	INTRODUCTION		1-1
	1.1	Background	1-1
		1.1.1 Phase I Results	1-1
		1.1.2 Phase II Objectives	1-1
		1.1.3 Phase II Prior Accomplishments	1-4
	1.2	Progress Summary	1-7
2	PRODUCT DESIGN		2-1
	2.1	Introduction	2-1
	2.2	Product Performance	2-1
		2.2.1 Operating Efficiency	2-1
		2.2.2 Fuel Price Projection	2-3
		2.2.3 Operating Cost Savings	2-7
	2.3	Computer Simulation Improvements	2-8
		2.3.1 TDP Improvement Description	2-8
		2.3.2 TDP Data Matching	2-9
		2.3.3 Compressor Code Improvement	2-10
	2.4	Planned Activity for Next Period	2-11
3	PRODUCT DEVELOPMENT		3-1
	3.1	Introduction	3-1
	3.2	Combustor	3-1
		3.2.1 Summary	3-1
		3.2.2 Design Requirements	3-1
		3.2.3 Combustor Design and Description	3-1
		3.2.4 Fabrication	3-4
		3.2.5 Testing	3-4
		3.2.6 Advanced Burner Development Program	3-9
		3.2.7 Planned Activity for Next Period	3-16
	3.3	Engine	3-16
		3.3.1 Summary	3-16
		3.3.2 Fabrication	3-17
		3.3.3 Engine Assembly	3-21
		3.3.4 Electromagnetic Starter	3-24
		3.3.5 Seal and Bearing Development	3-27
		3.3.6 Transient Load Acceptance/Overstroke Protection	3-30
		3.3.7 Planned Activity for Next Period	3-30

TABLE OF CONTENTS (Cont)

Section			Page
	3.4	Compressor	3-32
		3.4.1 Summary	3-32
		3.4.2 Compressor Fabrication and Assembly	3-32
		3.4.3 Compressor Testing	3-34
		3.4.4 Tubular Spring Coil	3-40
		3.4.5 Compressor Regulator	3-42
		3.4.6 Planned Activity for Next Period	3-43
	3.5	Controls	3-43
		3.5.1 Summary	3-43
		3.5.2 Design	3-44
		3.5.3 Fabrication	3-44
		3.5.4 Planned Activity for Next Period	3-44
	3.6	Air Handlers	3-45
		3.6.1 Summary	3-45
		3.6.2 Design	3-46
		3.6.3 Unit Fabrication and Assembly	3-48
		3.6.4 Test Preparation	3-51
		3.6.5 Planned Activity for Next Period	3-52
4	INTEGRATED TEST		4-1
	4.1	Introduction	4-1
	4.2	Test Plan	4-1
	4.3	Engine Installation	4-1
	4.4	Planned Activity for Next Period	4-2
5	TEST FACILITY UPGRADING		5-1
	5.1	Introduction	5-1
	5.2	Compressor Test Stand	5-1
	5.3	Integrated Test Stand	5-1
	5.4	System Test Facility	5-3
	5.5	Planned Activity for Next Period	5-5
6	FIELD EVALUATION TEST		6-1
	6.1	Introduction	6-1
	6.2	Site Screening and Evaluation	6-2
		6.2.1 Summary	6-2
		6.2.2 Screening Procedure	6-2
		6.2.3 Candidate Test Sites	6-2
		6.2.4 Site Evaluation	6-2

TABLE OF CONTENTS (Cont)

Section			Page
	6.3	Site Selection	6-7
	6.4	Site Preparation and Modification	6-7
		6.4.1 Summary.	6-7
		6.4.2 Initial Site Layout.	6-9
		6.4.3 Site Modifications.	6-9
	6.5	Installation Planning and Design	6-13
		6.5.1 Summary.	6-13
		6.5.2 Site Layout Revisions	6-14
		6.5.3 Humidification Unit	6-14
		6.5.4 Other Components	6-14
	6.6	Instrumentation System Design	6-14
		6.6.1 Summary	6-14
		6.6.2 System Configuration	6-14
		6.6.3 Sensor Requirements	6-18
		6.6.4 Instrumentation Rack	6-18
		6.6.5 Instrumentation Selection	6-18
	6.7	Planned Activity for Next Period	6-18
APPENDIX A:		SEAL DEVELOPMENT PLAN FOR PROTO 2 STIRLING ENGINE	A-1
APPENDIX B:		INTEGRATED TEST PLAN	B-1

LIST OF ILLUSTRATIONS

Figure		Page
1-1	Phase I Flow Diagram	1-2
1-2	Phase II Flow Diagram	1-3
2-1	Heating Oil Price as a Function of Crude Oil Cost	2-4
2-2	Gas Price as a Function of Crude Oil Cost	2-4
2-3	Electricity Price as a Function of Crude Oil Cost	2-5
2-4	Projected Composite vs. Crude Oil Prices	2-6
2-5	Projected Average Residential Electricity Prices	2-6
2-6	Projected Average Residential Gas Prices	2-7
3-1	Proto 2 Combustor Schematic	3-3
3-2	Assembled Proto 2 Combustor	3-3
3-3	Variable Output Blower with Air Filter Removed	3-4
3-4	Proto 2 Combustor Carbon Monoxide Emission Levels	3-6
3-5	Proto 2 Combustor Air Pre-heater Pressure Drop	3-6
3-6	Proto 2 Combustor Heater Head and Preheater Effectiveness	3-7
3-7	Proto 2 Combustor Efficiency, Average Fin-Air Preheat Temperature vs. Exhaust Gas Temperatures @ 15% Excess Air	3-8
3-8	Feltmetal Burner Element	3-11
3-9	Incoloy 800 Screen/Cerachrome Felt Burner Element - Post Test Results	3-11
3-10	Incoloy 800 Screen/Felt/Nextel 312 Burner Element - Post Test Results	3-12
3-11	Proto 2 Low Porosity Ceramic Braided Material Burner Configuration	3-12
3-12	Proto 2 High Porosity Ceramic Braided Material Burner Configuration	3-13
3-13	Feltmetal Inside Diameter Temperature	3-14
3-14	Feltmetal Outside Diameter Temperature	3-15
3-15	Nextel 312 Operating Temperature	3-15
3-16	Comparison of Burner Pressure Drop Characteristics	3-16
3-17	Engine Displacers, Stop and Rod	3-17
3-18	Engine Regenerator Assembly	3-18
3-19	Proto 2 Engine Power Piston	3-18
3-20	Heater Head Fin and Tube Assemblies	3-19
3-21	Engine Housing Weldment	3-19
3-22	Proto 2 Engine Housing Assembly	3-20
3-23	Proto 2 Engine Heater Head Assembly	3-20
3-24	Proto 2 Pivoting Engine Stand Assembly	3-21
3-25	Schematic Diagram of Heater Head Pressure Drop Test	3-22
3-26	Proto 2 FPSE Heater Head Pressure Drop	3-23
3-27	Electromagnetic Starter, Displacer, Piston and Adapter Assembly	3-24
3-28	Proto 2 Magnetic Starter Force Characteristics	3-26

LIST OF ILLUSTRATIONS (Cont)

Figure		Page
3-29	Wear Test Cylinder Assembly	3-28
3-30	Wear Test Fixture	3-29
3-31	Proto 2 Linear Inertia Compressor Components	3-33
3-32	Proto 2 Compressor - Upper Cylinder Assembly	3-35
3-33	Proto 2 Compressor - Lower Cylinder Assembly	3-35
3-34	Proto 2 Compressor - Upper Head	3-36
3-35	Proto 2 Compressor - Mid Housing Seal Components	3-36
3-36	Proto 2 Compressor Assembly Mounted in Component Test Facility	3-38
3-37	Fatigue/Endurance Data AM-362 Material	3-41
3-38	Outdoor Unit Piping Assembly	3-47
3-39	Outdoor Unit Frame in As-Built Condition	3-49
3-40	Close-Up of Engine Compartment Showing Refrigerant and Hydronic Circuits	3-49
3-41	Outdoor Unit Approaching Fully Assembled Stage	3-50
3-42	Outdoor Unit Cabinet	3-51
5-1	Data Processing System	5-4
6-1	Field Evaluation Test Site L	6-8
6-2	Field Evaluation Test Site L	6-8
6-3	HAHP Test Site Indoor Layout	6-10
6-4	HAHP Test Site Outdoor Layout	6-10
6-5	Outdoor Unit Placement Options	6-11
6-6	Preliminary Duct Interface Concept	6-11
6-7	HAHP Outdoor Unit Cabinet on Test Site Pad	6-12
6-8	HAHP Test Site Layout	6-15
6-9	HAHP Field Test System Diagram	6-17
6-10	Field Test Site Sensor and Submeter Locations	6-19
6-11	Instrumentation Rack	6-20

LIST OF TABLES

Table		Page
1-1	HAHP System Development Status	1-8
2-1	HAHP Product Features and Performance	2-2
2-2	NEP Product Features and Performance	2-2
2-3	Comparison of NEP and HAHP Characteristics	2-8
2-4	Proto 1 Test Data vs. Simulation Matching Analysis	2-9
2-5	Projected Proto 2 95° Design Point Performance with the G3 Displacer Rod	2-11
3-1	Proto 2 - Unit 1 Combustor Performance Summary	3-2
3-2	Proto 2 Combustor Design Requirements	3-2
3-3	Transient Load Acceptance and Overstroke Protection Options	3-31
3-4	Proto 2 Compressor Weight Distribution	3-37
6-1	Candidate Sites	6-3
6-2	Estimated Heating and Cooling Loads	6-4
6-3	Site Comparison Summary	6-5
6-4	Sensor List for GFHP Field Evaluation Measurements	6-20

SECTION 1

INTRODUCTION

SECTION 1
INTRODUCTION

1.1 BACKGROUND

In January 1975, General Electric embarked with the American Gas Association (AGA) on a multi-phase program for the development of a Gas Heat Pump (GHP). The Department of Energy (DOE) joined General Electric and the AGA in the program in 1976, and the Gas Research Institute assumed responsibility for the program from the AGA in 1977.

Phase I of the program was completed in December 1975, and Phase II was initiated in February 1976.

1.1.1 PHASE I RESULTS

The Phase I program followed the task structure shown in Figure 1-1. The primary objective of this program was to evaluate, through an analytical effort, if a gas heat pump product could evolve into a viable business venture. A comparison of the possible heat activated heat pump concepts showed that the Stirling/Rankine and the absorption cycle were the most promising from the standpoint of performance (potential operating savings), region of application, and market application (residential and/or commercial); the product design was performed in sufficient detail to show that the variation in manufacturing costs of the candidate systems would not significantly affect payback considerations. Further refinement of the design, cost, and performance for the two candidate systems and a definition of product introduction scenario and pricing strategies allowed a business evaluation of the two concepts to be completed. The results of these efforts were reviewed within GE and with AGA and gas industry representatives. As a result of Phase I effort, the Stirling/Rankine concept was selected as the most promising approach and a decision was made to proceed with the Prototype Development, Phase II.

1.1.2 PHASE II OBJECTIVES

The objective of the Phase II program is to demonstrate that the performance estimates generated during Phase I can be realized and that cost goals are realistic. The Phase II task flow diagram is shown in Figure 1-2.

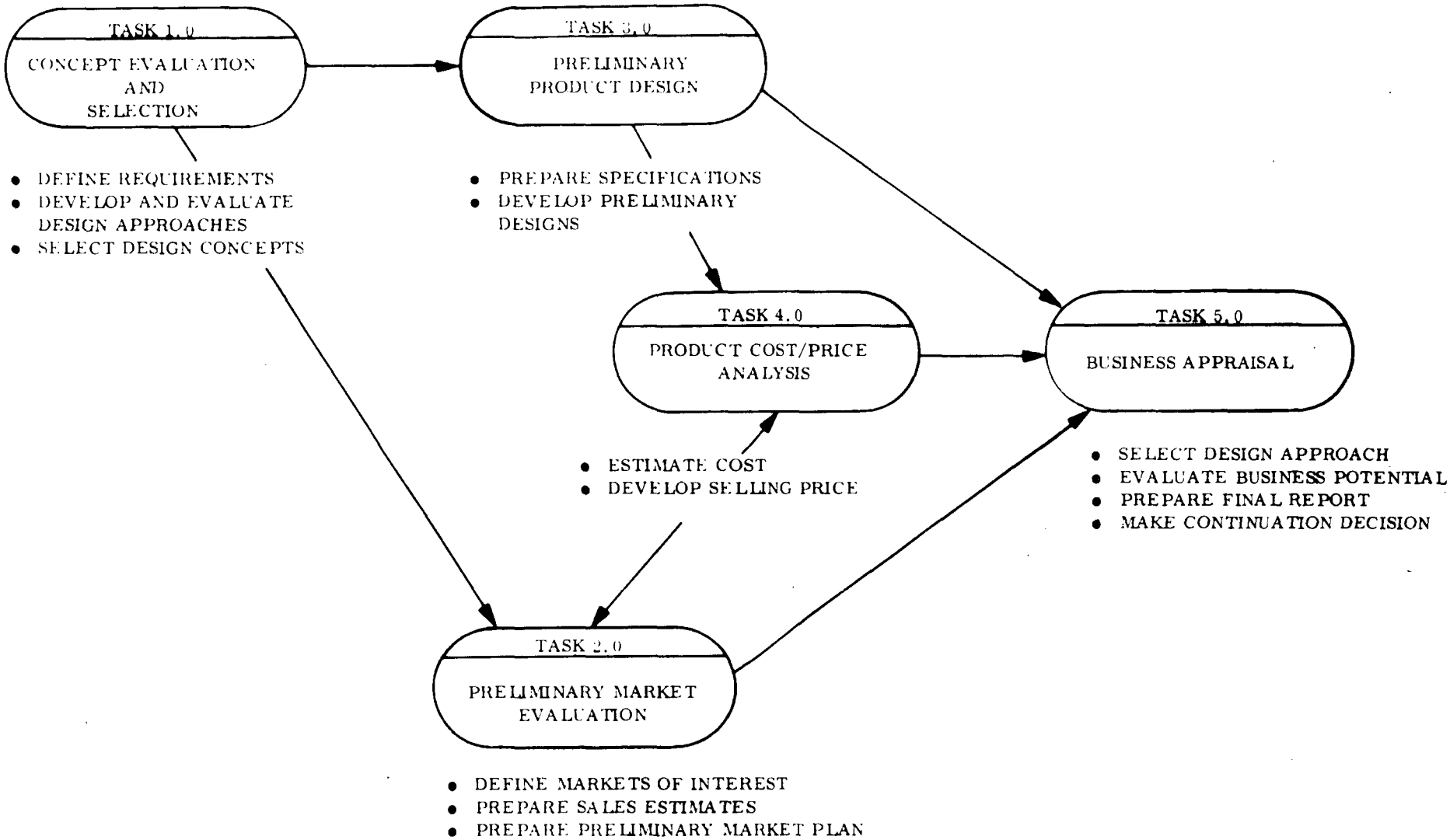

Figure 1-1. Phase I Flow Diagram

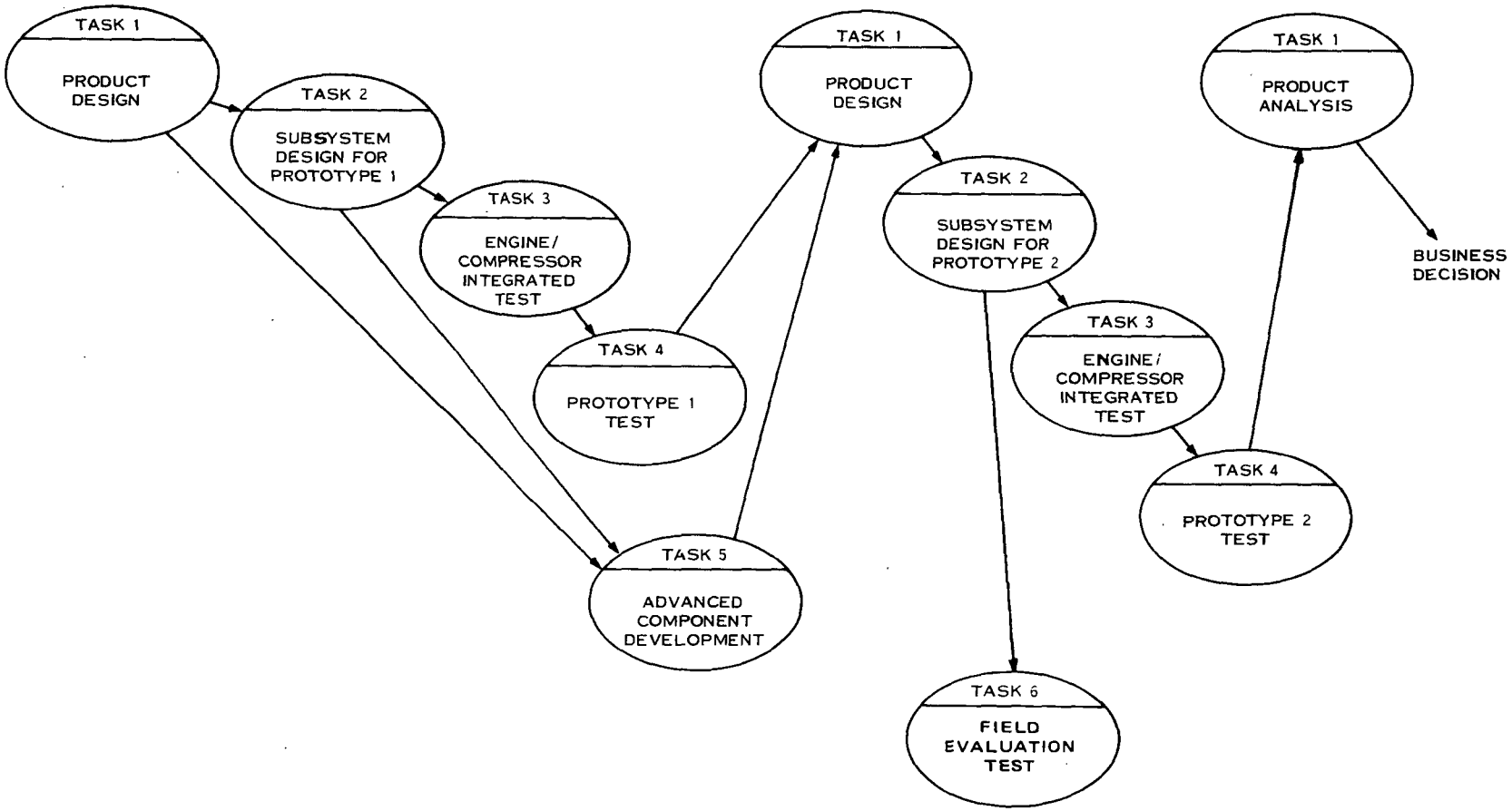

Figure 1-2. Phase II Flow Diagram

Two generations of prototype hardware will be developed during the Phase II program. Prototype 1 was the first attempt to test a complete Stirling/Rankine GHP system with heat pump configured hardware. This system was comprised of hardware of a primarily developmental nature. The Prototype 2 system consists of more mature hardware, incorporating the results of the Prototype 1 development effort and designed toward the eventual product.

1.1.3 PHASE II PRIOR ACCOMPLISHMENTS

The gas heat pump can be described in terms of five major subsystems: the natural gas combustor, the Stirling engine, the refrigerant compressor, the controls, and the air-handlers.

The Prototype 1 GHP consists of a 3-ton, split system targeted to provide approximately 64,000 BTU/hr in the heating mode at a nominal 45°F ambient temperature. The overall product performance goal was to achieve Coefficients Of Performance (COP) of 1.6 and 0.85 for the heating and cooling modes, respectively (excluding the electrical power requirements). The electrical power required for fans, blowers and pumps was set at less than 1500 watts. Based on these performance levels, the following performance goals were assigned to the major subsystems:

- Stirling Engine Cycle Efficiency: 32%
- Refrigeration Loop COP: 3.5
- Overall Combustion Efficiency: 80%

The following sections summarize the accomplishments during the previous Phase II reporting period for the system design and each of the subsystem areas.

Product Design

During the previous reporting period, product design effort was concentrated in three primary areas: (1) Preparation of detailed HAHP operating characteristics, performance

estimates and cost savings projections, (2) Analyses of system level operational and design requirements, and (3) Computer simulation code refinements.

Proto 2 system performance was projected based on prior Proto 1 test results and Proto 2 design parameters, utilizing the Thermodynamic Computer Program (TDP). Advanced HAHP product performance was also predicted based on selective assumptions concerning probable technology developments. System capacities and COP values were updated and plotted and key parameters tabulated. System operating schematics for representative outdoor ambient conditions were updated. Fuel price forecasts were used along with load profiles and the predicted performance to obtain estimated annual operating cost savings for three representative geographic locations. Savings results continued to be attractive as in previous predictions, with savings increasing as fuel prices increase.

Design requirements were established for compressor gas spring regulation and a combustor stepped firing rate schedule. The effects of compressor overstroke performance, and a supplementary heating capability were also assessed, leading to design recommendations in both of these areas.

The TDP computer program used extensively for design analysis and performance prediction has shown good correlation with Proto 1 test results; however, modifications to the code were defined in order to properly reflect the addition of the second gas spring and predict the friction factor effects in future calculations. These code changes will improve modeling of heat transfers and displacer shuttling losses. TDP improvements are also being evaluated which will improve calculation of compressor mass flow and other dynamic effects.

Combustor

Detailed design, fabrication and assembly of the Proto 2 combustor were completed during the previous reporting period. It was determined that Proto 1 design requirements would be applicable to Proto 2 except for an increase of the combustor efficiency goal from 80 to 82% and incorporation of a two-stage firing schedule. Combustor checkout and testing

activities were commenced, with five areas being subjected to investigation and/or design modifications: (1) the combustor/engine exhaust seal, (2) combustor insulation, (3) the insulation environmental housing, (4) a two-stage gas valve, and (5) the Torin air blower design. A combustor test plan was also prepared.

Engine

Detailed design of the Proto 2 engine was completed and the parts procurement and fabrication cycle commenced by the end of the previous reporting period. Basic design parameters, established previously, were retained and, in addition, a second gas spring and an electromagnetic starter were added. The former serves to increase the operating frequency to about 30 Hz and the latter accommodates the engine autostart sequence. A detailed description of the engine design was presented in the January through June 1979 Semi-Annual Report.

Compressor

Design was completed during the previous period along with approximately 50% of the fabrication work on the Proto 2 inertia compressor. Substantial modifications were made to the geometry of the unit compared to that of Proto 1. The piston diameter was increased, the overall stroke reduced and excess weight eliminated as a result of these modifications. An increase in the natural frequency of the compressor was achieved by these changes, contributing to an increase in the overall engine-compressor operating frequency.

Controls

The detailed design and schematic diagrams for the Proto 2 system were completed during the previous period. Assembly drawings, parts lists and wiring lists were also generated and advanced parts ordering information released. The operational control sequences were defined and applicability to the field test unit were assessed.

Air Handlers

The design modifications for the indoor unit were completed during the previous period and the refrigerant and hydronic loop piping design commenced. An outdoor unit cabinet concept

was selected and the fabrication of the cabinet initiated. The outdoor unit base and frame structure design was also completed.

Prototype 1 Experimental Components Evaluation

The experimental evaluation of key Proto 2 component designs utilizing existing Proto 1 test hardware was carried out during the previous reporting period. The principal effort was concentrated on the second gas spring. Tests of improved regenerator components were planned and fabrication completed. However, the detailed tests were deferred until completion of the Proto 2 hardware fabrication, due to retrofit incompatabilities with the Proto 1 hardware. Sufficiently positive results were achieved from the gas spring tests to verify the desirability of continuing with an integrated gas spring design for Proto 2.

1.2 PROGRESS SUMMARY

Program effort during the eighth 6-month period of Phase II was concentrated on subsystem fabrication, testing of the combustor, compressor and controls, preparation for integrated engine-compressor testing of the first Proto 2 unit, and updating of system performance and cost analyses. In addition, follow-up test facility upgrading work was completed and the Field Evaluation Test site screening, selection and preliminary modification were carried out. Table 1-1 summarizes the major system development accomplishments during the July to December 1979 reporting period. Detailed descriptions of the program progress on each subsystem, overall product design and all other related program areas are presented in the following sections of this report.

Table 1-1. HAHP System Development Status

System/Subsystem	Status
Prototype 2*	
System	• Product Performance Estimates Updated • Annual Operating Cost Savings Updated • Thermodynamic Simulation Code Improved
Combustor	• Component Testing of First Unit Completed • System Level Performance Estimates Updated • Advanced Burner Element Materials Tested • Overall Combustor Performance Evaluated (All Design Requirements Met)
Engine	• Fabrication 95% Completed • Integrated Test Stand Installation in Process • Instrumentation Wiring Complete
Compressor	• Fabrication Completed • Test Stand Installation Completed • Piston Centering Modifications Tested
Controls	• First Unit Fabrication Completed • Testing Initiated • Field Test Display and Control Panel Designed
Air Handlers Indoor Unit Outdoor Unit	• First Indoor Unit Modification Completed • Outdoor Unit Detail Design and Fabrication Completed • Outdoor Unit Cabinet Design and First Unit Fabrication Completed

* Prototype 1 activity completed previously

SECTION 2

PRODUCT DESIGN

SECTION 2
PRODUCT DESIGN

2.1 INTRODUCTION

Activity during this reporting period focused on estimating Proto 2 operating cost savings as well as eventual product savings. Simulation code improvements required for the forthcoming engine testing were continued during this reporting period.

In support of the HAHP marketability assessment, operating cost savings were projected for the current hardware as well as the mass manufactured configurations. Based on predicted HAHP performance, nearest equivalent product performance improvements and a forecast of fuel prices, current HAHP cost savings are attractive and are expected to improve in the future due to escalating fuel prices.

Improvements to the thermodynamic simulation code (TDP) have resulted in better understanding of engine and system operating characteristics. Additional refinement of the analytical tools will be pursued once the Proto 2 test data becomes available.

2.2 PRODUCT PERFORMANCE

Operating cost savings anticipated with the HAHP over the next ten years were estimated. Performance levels as well as fuel prices are expected to change during this period, therefore HAHP performance, nearest equivalent product (NEP) performance and fuel prices have been projected through 1990. These factors were combined in order to estimate operating cost savings.

2.2.1 OPERATING EFFICIENCY

HAHP product features and performance estimates through 1990 are shown in Table 2-1. Performance improvements are projected with higher operating temperatures, more heat recovery and consequently increased combustor efficiency, a more efficient heat pump subsystem, and improved capacity modulation. Further improvements are also expected from additional experience with this new product.

Table 2-1. HAHP Product Features and Performance

	Proto 2 (1980)	Initial Product (1985)	HAHP Product (1990)
Hot Side Temp. (^{o}F)	1250	1400	1500
Engine Efficiency (%)	32	35	36-38
Compressor Efficiency (%)	70	77	84
Parasitic Power (Watts)	1000	730	660
Combustor Efficiency (%LHV)	82	82	84/90
Seasonal Thermal Efficiency (HHV)			
Heating	0.96	1.08	1.59
Cooling	0.87	1.04	1.21
Overall SPF* (HHV)			
Heating	0.74	0.85	1.18
Cooling	0.62	0.74	0.90

*With a 30% electric power conversion efficiency

NEP performance improvements are also expected during this time period. Substantial improvements are expected to be achieved by pulse combustion furnaces, and performance gains are also expected in modulated speed air conditioners. These trends are shown in Table 2-2.

Table 2-2. NEP Product Features and Performances

	1980 NEP	1985 NEP	1990 NEP
Furnace	Conventional Gas	(**)	Pulsed Combustion
Seasonal Thermal Efficiency (HHV)	58%	68%	85%
Parasitics (Watts)	500	300	270
Air Conditioner	Constant Speed	Two Speed	Two Speed
EER (95°F)	10	11	13
Seasonal Efficiency*	0.65	0.78	0.83

*With a 30% electric power conversion efficiency
**Conventional gas plus flue damper and electric ignition

2.2.2 FUEL PRICE PROJECTION

Fuel price projections were made by assuming energy costs of all forms would follow the trend of oil price changes. At the time these projections were made, they appeared to result in higher prices than those reported by most forecasters. However, the most recent price trends, subsequent to the HAHP fuel price predictions, indicate that the latter are realistic and quite satisfactory for estimating future HAHP market conditions.

The relationships between crude oil price and other fuel prices were examined first. A prediction of crude oil prices in 1985 and 1990 was then made, and the corresponding cost of other fuels calculated based on their price relationships to crude oil. These predictions were substantiated with price history data for the past five years.

The range of crude oil cost examined was 25 to 50 dollars per barrel[1], at the average U.S. refinery acquisition level. The effect of crude oil cost on heating oil cost is shown in Figure 2-1. The lower end of the range corresponds to a constant markup per gallon at the May 1979 level[2] ($15.40/barrel crude, 64 ¢/gallon heating oil). The upper end of the range corresponds to markups increasing in direct proportion to the crude oil price (with a starting point of $15.40/barrel crude, 85¢/gallon heating oil). The average of these two extremes was used for subsequent calculations.

The relationship of crude oil cost to natural gas cost is shown in Figure 2-2. The lower end of the range corresponds to a gas/heating oil price ratio remaining at current levels. The upper end of the range corresponds to gas cost parity with heating oil on a heat value basis. The current gas cost used is 38¢/therm, which is typical in the U.S. Northeast.

Comparable projections for electricity prices are shown in Figure 2-3. The lower end of the range is based on the assumption that only oil and natural gas prices will increase with crude oil cost and the other fuels (coal, nuclear, etc.) will remain at their current price levels. The upper end of the range corresponds to all fuel costs increasing in direct proportion to

---

(1) All costs are in constant 1979 $.
(2) DoE's May 1979 "Monthly Energy Review."

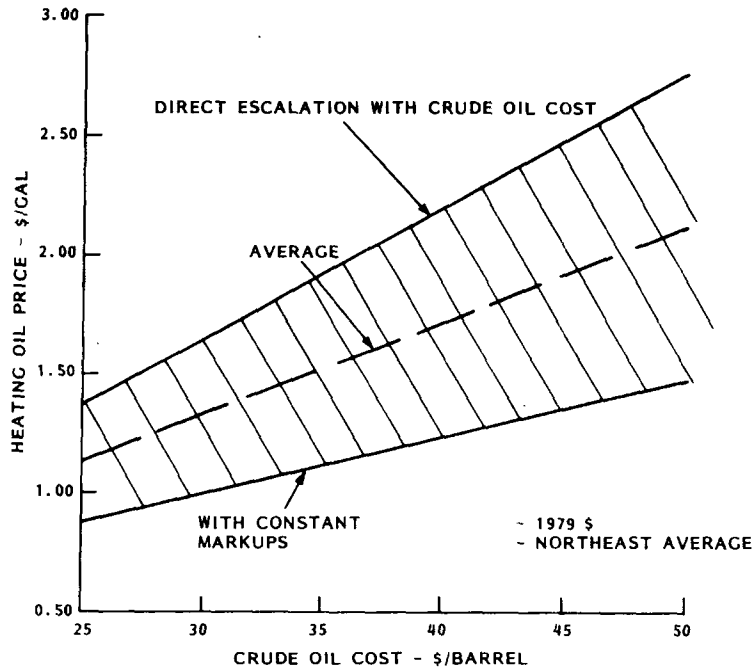

Figure 2-1. Heating Oil Price as a Function of Crude Oil Cost

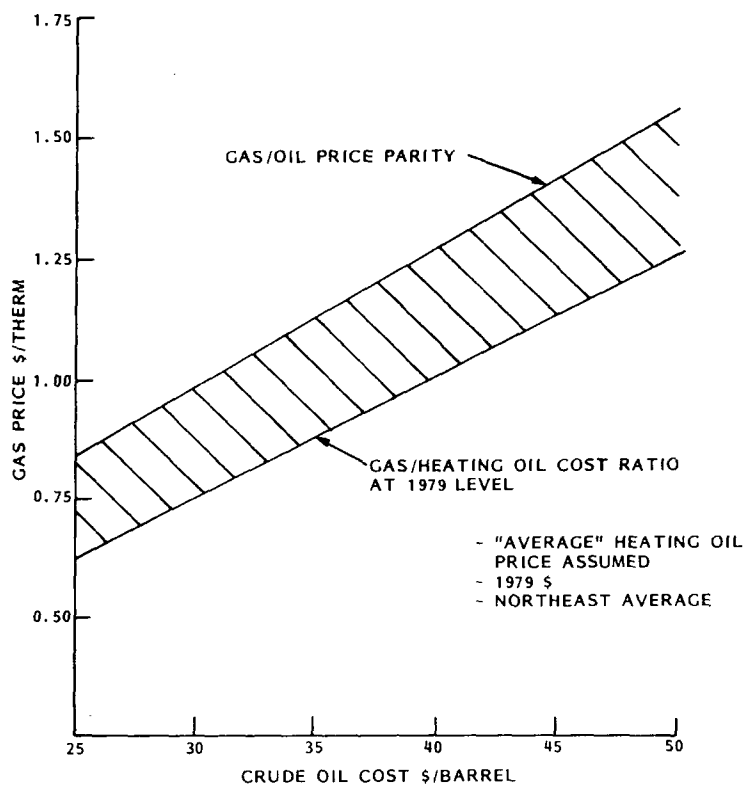

Figure 2-2. Gas Price as a Function of Crude Oil Cost

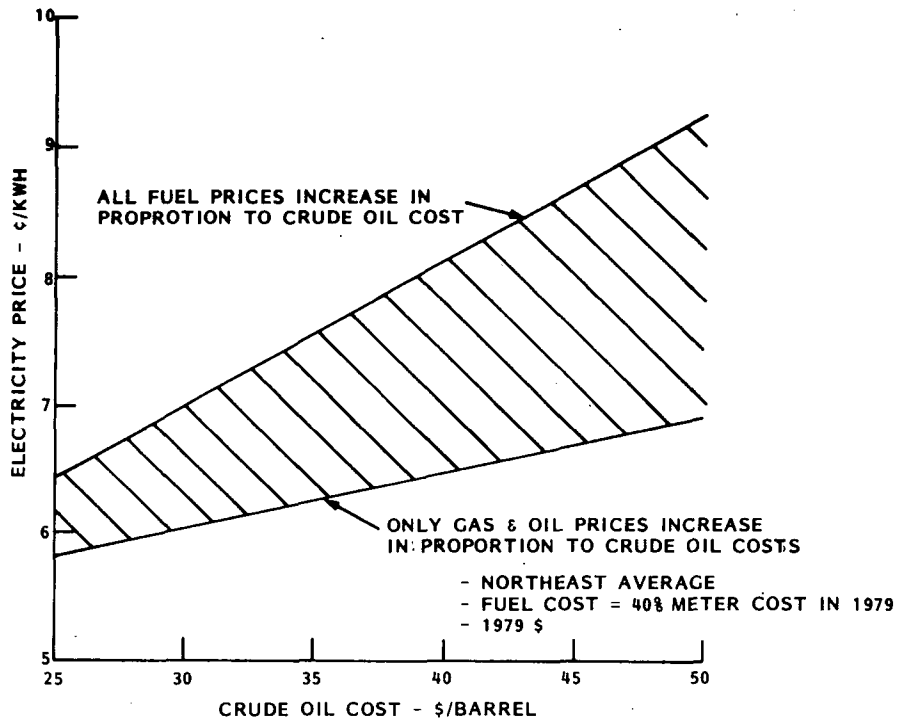

Figure 2-3. Electricity Price as a Function of Crude Oil Cost

oil cost (with fixed charges also remaining at 1979 levels). The current electricity price used is 5.4¢/kWh, which is representative of the Northeast year-round value. Fuel cost accounts for 40% of the meter cost and oil and gas account for 35% of the total fuel cost.

Crude oil prices of $30/barrel (1979), corresponding to 8% yearly escalation, are predicted for 1985, with subsequent prices to escalate at the same rate. This is based on price deregulation recently legislated and agrees with the fact that crude oil has been escalating at rates of 6% and 10%, respectively, for imported and domestic oil. This data is shown in Figure 2-4. Projections made by DoE, Arthur D. Little, Inc. and GE staff analysts were considered; however, even though these projections are only a few months old they do not reflect currently anticipated escalation rates. The prices for natural gas and electricity were then derived from the crude oil/heating oil/natural gas/electricity price relationships previously shown. Median values from these relationships were selected for the forecast. The resulting electricity escalation rate was 3.4% (1979$), which matches the average escalation rate experienced since 1973 (Figure 2-5). The corresponding average gas

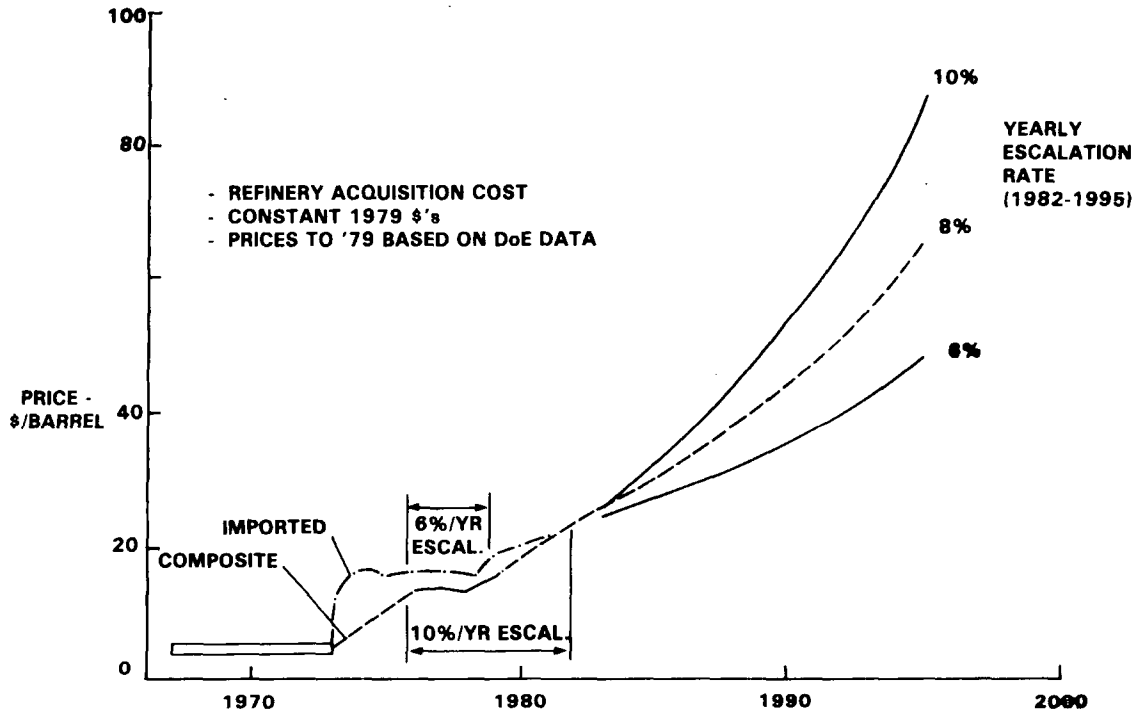

Figure 2-4. Projected Composite vs. Crude Oil Prices

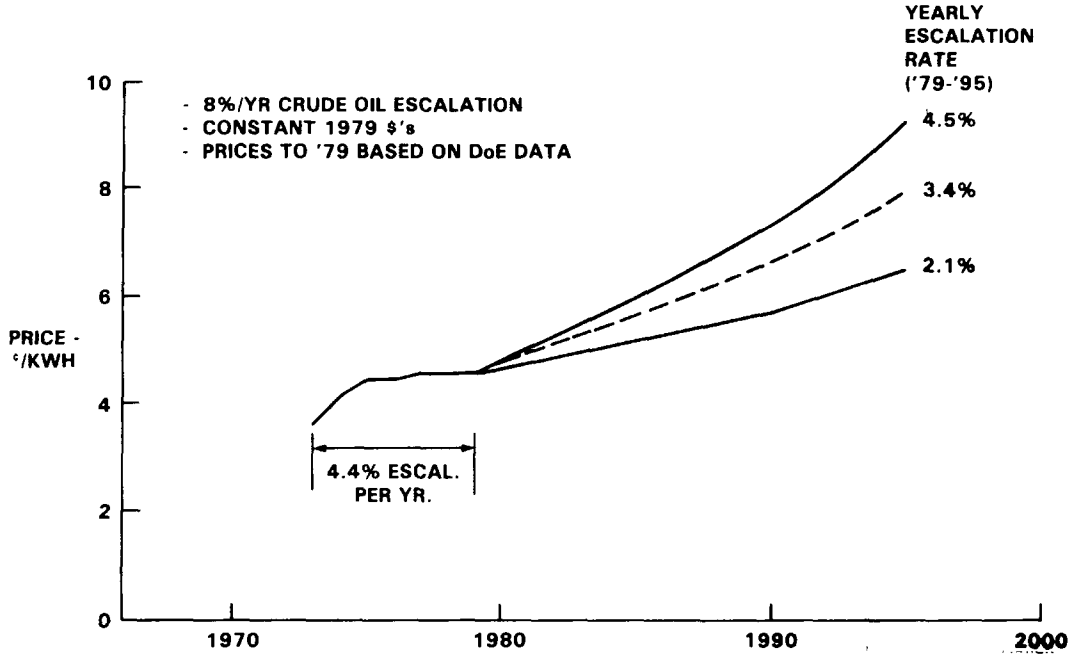

Figure 2-5. Projected Average Residential Electricity Prices

escalation rate is 10% through 1995, reflecting price deregulation in 1985. Again, projected escalation using the crude oil price relationships derived results in values closely matched by recent trends (Figure 2-6).

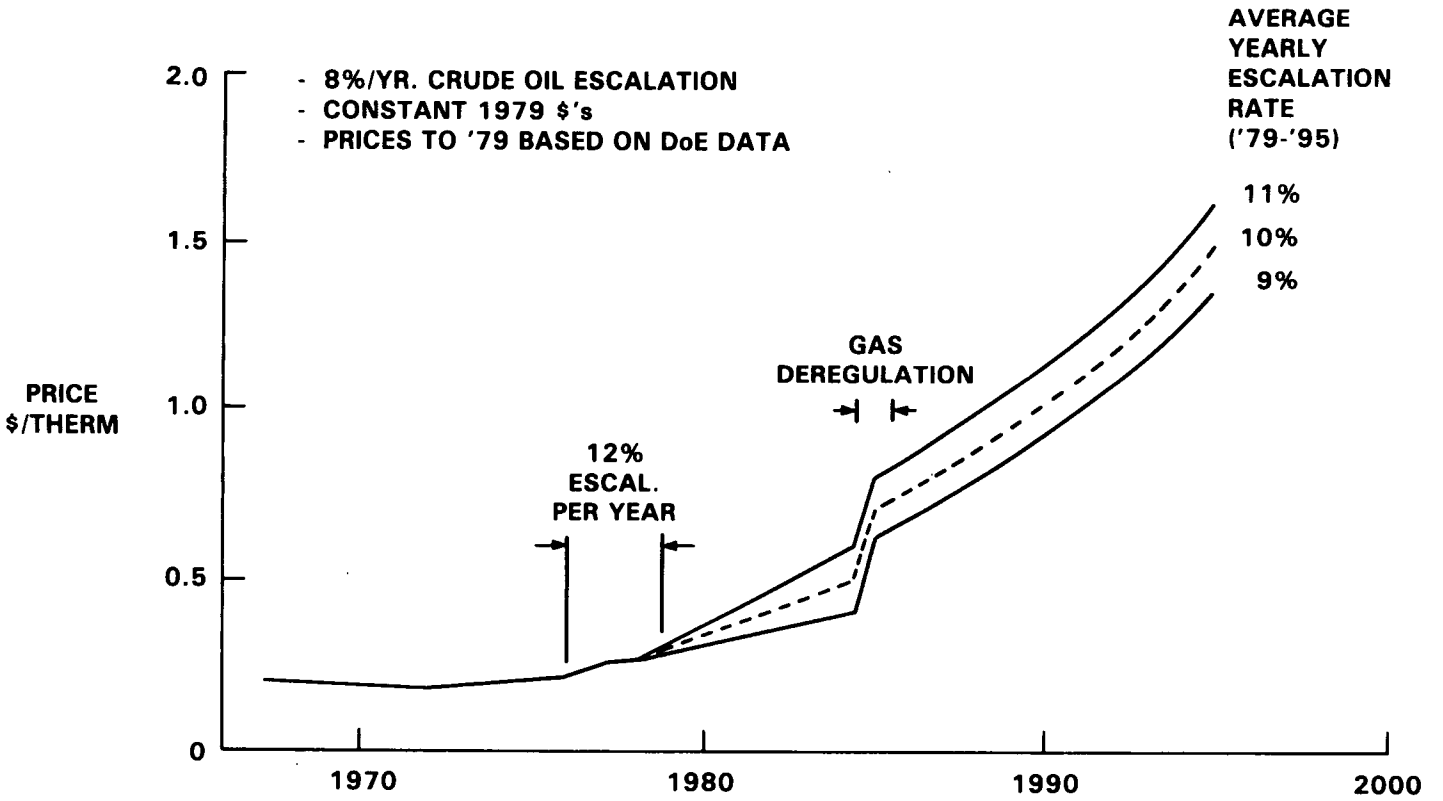

Figure 2-6. Projected Average Residential Gas Prices

2.2.3 OPERATING COST SAVINGS

Combining HAHP performance, NEP performance and fuel prices for corresponding time frames, operating cost savings were projected. Assuming loads between those for well insulated new construction and reasonably insulated retrofits, and fixing the assumed load for all comparisons, corresponding savings are shown in Table 2-3. The operating cost savings shown are a reflection of equipment efficiencies and fuel prices. Improvements in equipment efficiencies result in operating costs rising much less steeply than fuel prices. Since savings of both gas and electricity are indicated with the HAHP, higher than predicted fuel price escalation of gas or electricity will enhance savings when the HAHP is used.

Table 2-3. Comparison of NEP and HAHP Characteristics
(Philadelphia, Constant $-1980)

	1980	1985	1990
Space Heating Demand (10^6 Btu/yr)	75	75	75
Space Cooling (10^6 Btu/yr)	17.0	17.0	17.0
Gas Cost (nominal, $/Therm)	0.41	0.94	1.35
Electricity (¢/kWh)			
Summer	7.4	9.0	10.5
Winter	6.4	7.8	9.0
NEP			
Heating Cost ($/Year)	565	1039	1221
Cooling Cost ($/Year)	171	174	186
HAHP			
Heating Cost ($/Year)	430	728	741
Cooling Cost ($/Year)	126	189	230
Gas Savings (Therms/Year)	306	233	268
Electricity Savings (kWh/Year)	754	733	841
Operating Cost Savings ($/Year)	180	296	436

2.3 COMPUTER SIMULATION IMPROVEMENTS

Improvement of the computational tools to be used in interpreting test data continued during this reporting period. The thermodynamic simulation code (TDP) was expanded to account for thermal losses and the dynamic housing motion. Key parameters were then adjusted to closely match Proto 1 test data. Improvements in the refrigerant-compressor model were also made. The latter will be used to interpret compressor-only tests as well as to further improve the engine/compressor simulation.

2.3.1 TDP IMPROVEMENT DESCRIPTION

The following TDP features were incorporated: (1) Displacer shuttling losses were modeled in order to reduce displacer strokes to better match test experience, (2) Heat conduction via the pressure vessel was modeled as well as regenerator heat losses, and (3) Housing motion was added. Modeling of the housing motion appeared to have the most impact on performance

in that TDP now predicts reduced piston stroke. Reduced piston stroke reduces excitation of the compressor and thereby reduces refrigerant flow and system capacity. These predictions must be verified with test data.

2.3.2 TDP DATA MATCHING

To further improve the thermodynamic simulation code, key parameters characterizing engine operation were adjusted to match previous Proto 1 test data. Good agreement was obtained in both dynamic and heat transfer behavior, as shown in Table 2-4. Two data points with widely different compressor loads were selected for simulation. Piston damping used in matching the data is substantially less than that previously used because of the additional details accounted for in the new model. Absolute values and percent deviations between data and simulation are shown. The improved model was then used to verify the initial Proto 2 configuration to be tested.

Table 2-4. Proto 1 Test Data vs. Simulation Matching Analysis

	Dynamics				Heat Transfer		
	Piston Stroke IN.	Displacer Stroke IN.	Operating Frequency HZ	Phase Angle ϕ	Heat In KBTUH	Heat Out KBTUH	Thermal Power KW
Test Data 8-29-78 13:30	1.26	1.70	21.5	33	27.2	18.9	2.43
Simulation	1.08	1.54	22.2	46	28.8	21.1	2.15
% Deviation	-14	-9	+3	-	+6	+12	-12
Test Data 8-31-78 10:37	1.24	1.64	23.3	38	32.7	20.8	3.49
Simulation	1.20	1.57	22.7	50	33.3	23.0	2.92
% Deviation	-3	-4	-3	-	+2	+11	-16

Engine performance predictions with a nominal hardware configuration (including a G-2 displacer rod) shows lower than expected performance. Use of a larger (G-3) displacer was simulated and showed improved dynamics and performance. Table 2-5 shows the G-3 results. The hardware configuration analyzed also reflects the "as-built" engine parameters as opposed to preliminary estimates obtained before design drawings were completed. The simulation indicates that nominal system capacity can be met, but that nominal efficiency may be lower than the design goal of 30-32%. Actual performance may be lower or higher than predicted because of a number of assumptions made in the analysis, such as parameter matching to Proto 1 data rather than Proto 2 and also the fact that no housing motion was assumed. Further tuning of Proto 2 engine parameters can be used to improve performance results. Simulation of the latter was postponed until the model is verified against Proto 2 performance.

2.3.3 COMPRESSOR CODE IMPROVEMENT

Improvement of the compressor model was also initiated. This model will be used for interpreting compressor test data and is also used in TDP as part of the engine/compressor simulation. The existing Proto 1 compressor model is based on correlation of empirical data and does not allow an evaluation of fundamental changes in design to be made directly.

The basis of the new compressor simulation will be a first law of thermodynamics analysis with eight independent control volumes. This is an improvement over the ideal gas law approach with empirical correction factors previously used. Refrigerant mass flow and valve dynamics will be based on test data. These improvements will allow a distinction between the effects of heat transfer, pressure drops and mass flow rates. It will also improve accuracy over a wider range of frequencies, pressure ratios and gas spring reference pressures, in addition to reducing the effort required to match the new Proto 2 test data. The most important outcome anticipated is better understanding of compressor operation and further tuning of the design to maximize performance.

Table 2-5. Projected Proto 2 95°F Design Point Performance with the G3 Displacer Rod

	Without Regulator	With Regulator
Heater Tube Temp., °F	1250	1250
Firing Rate, KBTUH (HHV)	42.2	52.1
Energy Input, KBTUH	31.5	38.9
Energy Out, KBTUH	20.9	26.4
Thermal Power, KW	3.13	3.65
Compressor Power, KW	2.54	3.06
Refrigerant Mass Flow Rate, LB/HR	462	535
Engine Piston Stroke, IN.	1.19	1.35
Displacer Stroke, IN.	1.87	2.02
Operating Frequency, HZ	29.1	29.6
Displacer-Piston Phase Angle, DEG.	45	44
Engine Efficiency, %	27.5	26.8
Heat Pump Capacity, BTUH	31,400	36,300
Heat Pump COP	3.62	3.48
System Capacity, BTUH	30,400	35,300
System COP (HHV)	0.72	0.68

2.4 PLANNED ACTIVITY FOR NEXT PERIOD

The focus during the next reporting period will be evaluation of Proto 2 performance data. This entails updating analytical tools to quickly reduce test data, performance calculation of test configurations, and interpretation of test data. The latter requires establishment of performance trends and making recommendations to improve performance. The TDP simulation is a key data reduction tool in that it is used to estimate parameters that are not measured, and it is also used to evaluate a multitude of hardware configuration options in an attempt to improve performance. Continued improvements in the various simulation codes is also anticipated.

SECTION 3

PRODUCT DEVELOPMENT

SECTION 3
PRODUCT DEVELOPMENT

3.1 INTRODUCTION

The principal HAHP development effort during the current reporting period was directed at the fabrication and test of the Proto 2 system hardware components. Component and subsystem level tests were implemented for the combustor, compressor and controls subsystems. Engine fabrication was nearly completed, paving the way for integrated engine-compressor testing early in the next reporting period. The air handler fabrication and/or assembly was completed for the first indoor and outdoor units and the field test unit was partially assembled by the end of the reporting period.

3.2 COMBUSTOR

3.2.1 SUMMARY

During this reporting period, component testing of the Proto 2 Unit 1 combustor was completed and the projected system level combustor performance determined. Proto 2 combustor performance met all design requirements after minor modifications to the fabricated hardware. A performance summary is presented in Table 3-1. The combustion air blower flow control damper mechanism design was finalized, and the unit fabricated and tested along with the blower assembly. In addition, testing of the White-Rodgers two stage gas valve was also successfully completed.

3.2.2 DESIGN REQUIREMENTS

Proto 2 combustor design requirements are summarized in Table 3-2 and reflect a more stringent set of requirements than those for Proto 1, in order to meet the revised HAHP system COP goals.

3.2.3 COMBUSTOR DESIGN AND DESCRIPTION

The detailed description of Proto 2 combustor design has been previously documented (Jan. - June 1979 Semiannual Report). A schematic diagram and a photograph of the resulting Proto 2 combustor hardware assembly are shown in Figures 3-1 and 3-2, respectively. Combustion

Table 3-1. Proto 2 - Unit 1 Combustor Performance Summary

Parameter	Projected Performance	Test Performance	Goal
Heater Head Effectiveness	92-94%	92-94%	92%
Pre-Heater Effectiveness	63-68%	63-68%	60%
Pressure Drop	1.20 in H_2O	0.58 in H_2O	2 in H_2O
CO Emissions	0.02%	0.016%	.04%
Combustor Efficiency (LHV)	82.5%	94.8%	82%

Table 3-2. Proto 2 Combustor Design Requirements

Ratings: $T_{amb} > 85^oF$	41 KBTUH
T_{amb} 30^oF - 85^oF	24.4 KBTUH
$T_{amb} < 30^oF$	41 KBTUH
Efficiency (LHV)	82%
CO Emissions @ 15% Excess Air	0.04%
Combustor Pressure Drop	2 in H_2O
Heater Head Heat Exchanger Effectiveness	92%
Pre-Heater Effectiveness	60%

of the premixed air/gas mixture occurs outboard of the surface of a radiation cooled transpiration burner element. The burner element is 80% porous, consisting of chopped, pressed and sintered 5.6 mil. diameter wire fabricated of Hoskins 875 material. Inlet air to the combustor is preheated by rejected exhaust heat through the wall of a corrugated cylindrical recuperator. The major elements, comprising the combustor assembly are delineated in Figure 3-1.

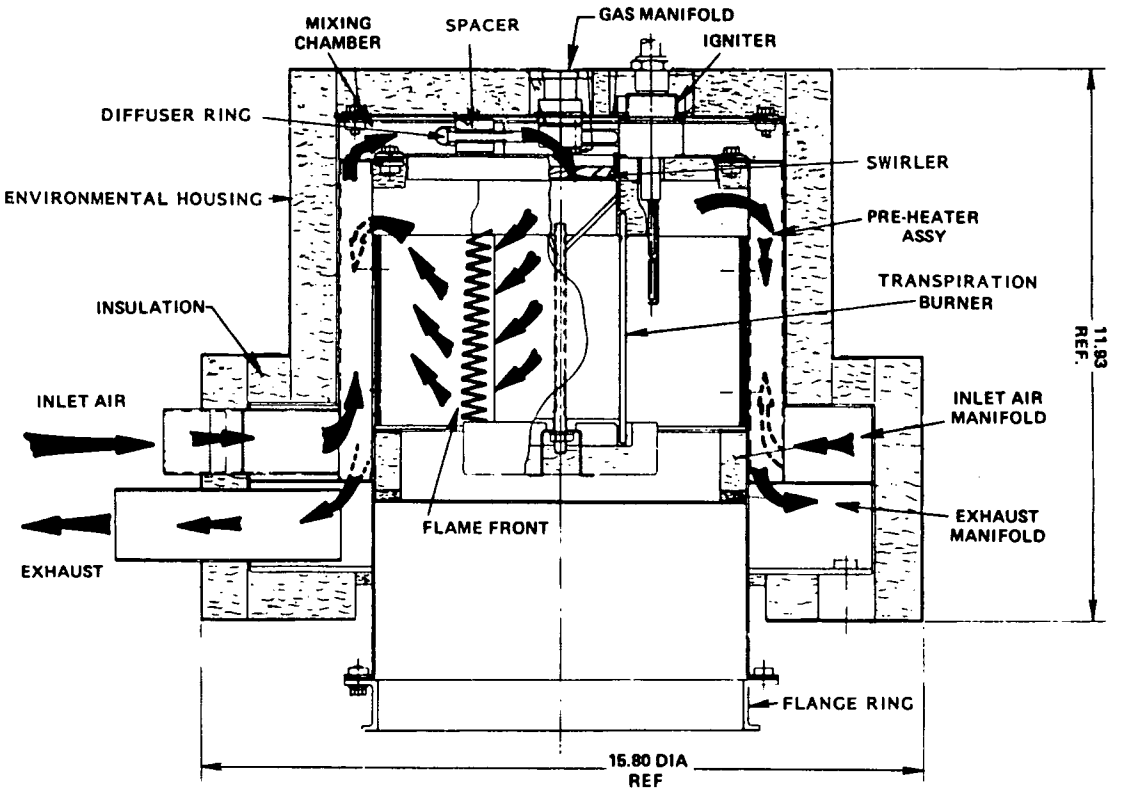

Figure 3-1. Proto 2 Combustor Schematic

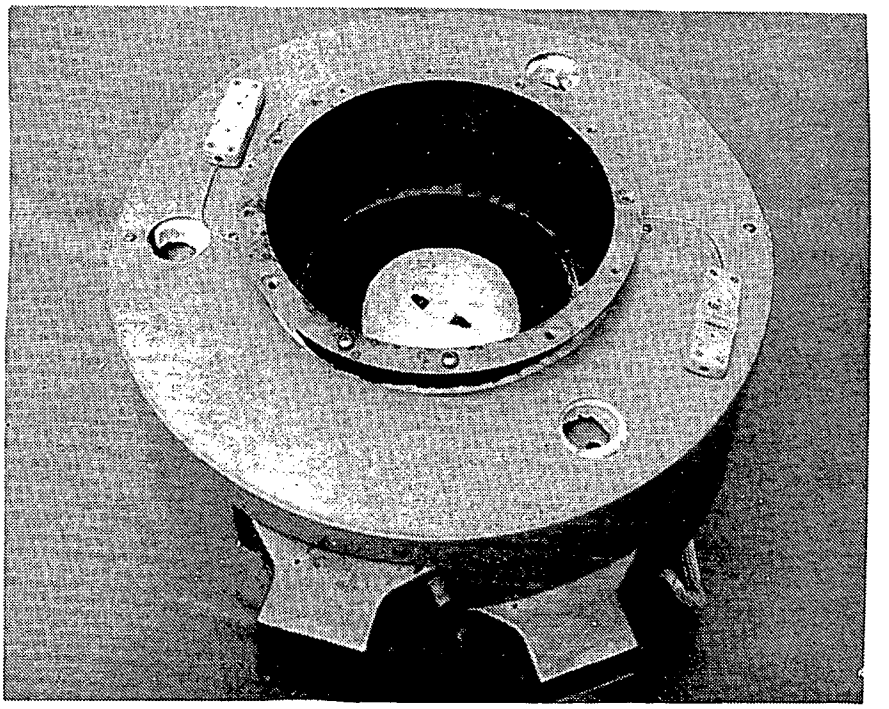

Figure 3-2. Assembled Proto 2 Combustor

A White Rodgers two stage gas valve provides flow regulation for two distinct firing rates of 24.5 and 41 kBtu/hr. A variable output blower will supply a nominal 15% excess air for both firing rate conditions. The blower is a modified version of a standard blower manufactured by the Torin Corporation and incorporates rotary solenoids and plate assemblies to vary the restriction on an inlet orifice plate and control the level of combustion air. A photograph of the blower assembly is shown in Figure 3-3.

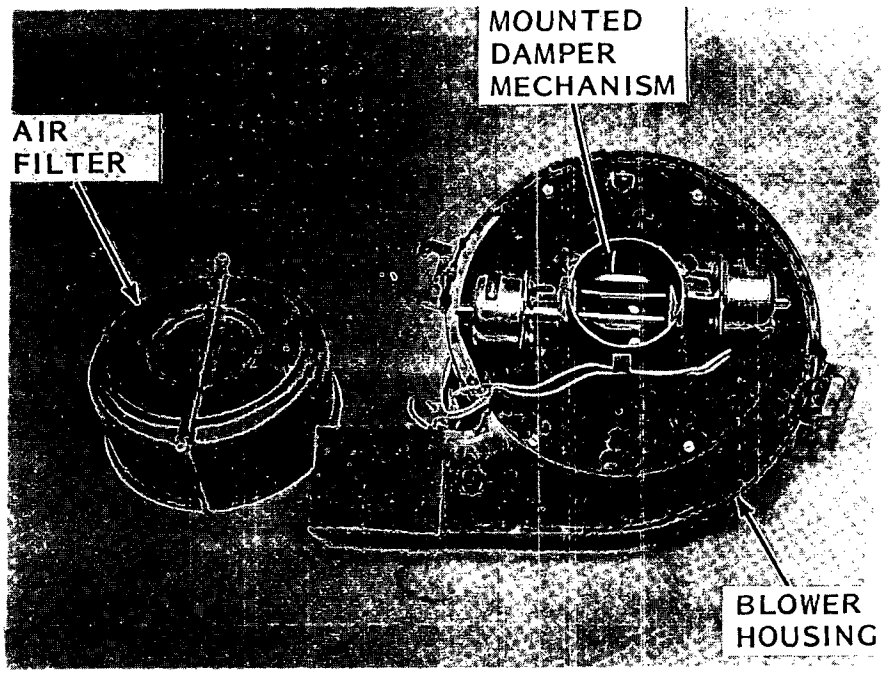

Figure 3-3. Variable Output Blower with Air Filter Removed

3.2.4 FABRICATION

Combustor hardware fabrication and procurement had been completed during the previous reporting period. Procurement of blower hardware occurred during this reporting period in addition to the fabrication of the air supply mechanism.

3.2.5 TESTING

Combustor Testing

Test results from the previous reporting period indicated that the velocity distribution of air at the exit of the preheater was uniform. However, carbon monoxide emissions in excess of the 0.04% design goal were measured at 40 kBtuh and 15% excess air.

Since CO emissions levels can be effectively reduced by increased air/gas mixing, efforts were undertaken to promote greater turbulence without introducing an excessive air side pressure drop. The slot in the segmented gas inlet diffuser ring was reduced from 0.020 to 0.010 inches. The gap between the spacers in the mixing chamber was incrementally reduced from 0.2 inches to 0.157 inches. Arrival at this configuration resulted in an acceptable emissions level that was also compatible with the pressure drop limits.

In Figure 3-4 carbon monoxide emissions levels are shown for various firing rates and excess air levels. From Figure 3-4 it can be seen that Proto 2 combustor meets the 0.04% CO emissions goal at 40 kBtu and 15% excess air. Increased exhaust gas temperature should serve to reduce the exhaust level of carbon monoxide even further. Combustor pressure drop characteristics are shown in Figure 3-5. Due to increased exhaust gas temperature in the HAHP system, combustor pressure drop is expected to double from the values shown. However, the projected pressure drop at 40 kBtuh and 15% excess air is 1.2 in H_2O which is well within the 2.0 in. H_2O design goal.

In Figure 3-6, combustor air preheater and heater head effectiveness are plotted vs. the number of heat transfer units. Water was used on the fluid side of the heater head heat exchanger during component testing. In the HAHP, helium rather than water will be the heater head working fluid. Increased thermal conductivity at higher operating temperatures will result in heater head operation at an approximately 30% increase in the number of heat transfer units, thus the operating range of NTUs will be from 3 to 4 resulting in a heater head effectiveness of 92-94% which meets the design goal.

The air preheater is expected to operate at 2 NTU with C_{min}/C_{max} equal to 0.55. Under combustor component test conditions C_{min}/C_{max} is 0.85 with operation at higher NTU's because of lower operating temperature and reduced specific heat of the inlet air. Based on actual operating conditions air preheater effectiveness will range from 63-68% and exceed the design goal of 60%.

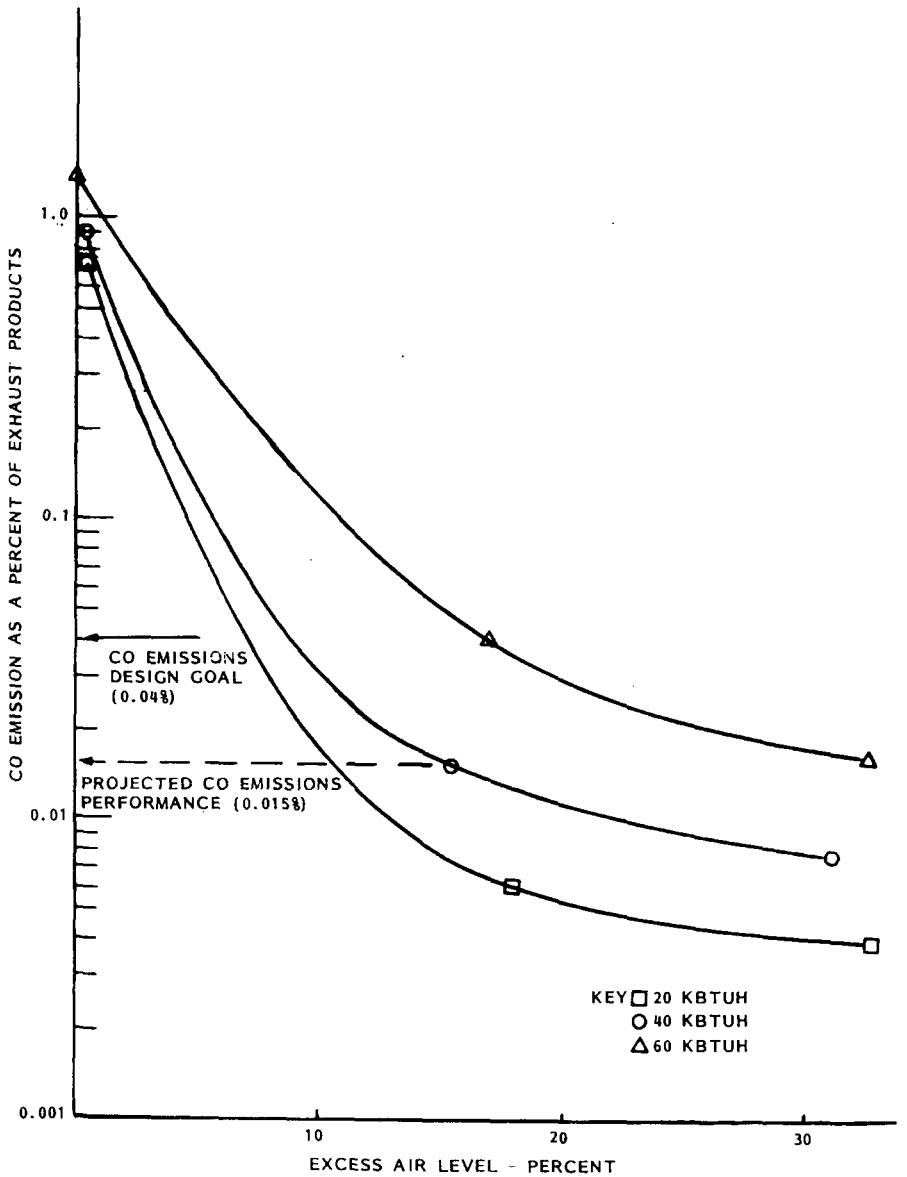

Figure 3-4. Proto 2 Combustor Carbon Monoxide Emission Levels

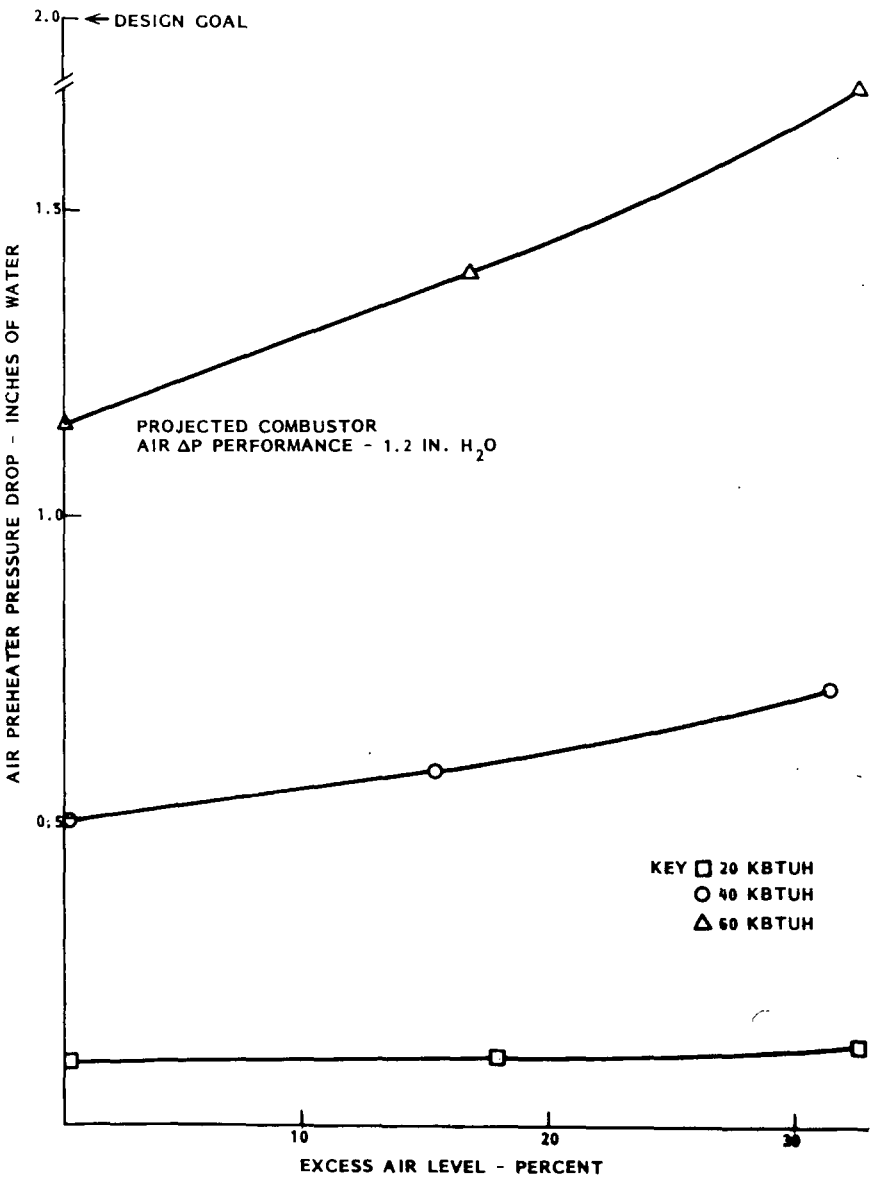

Figure 3-5. Proto 2 Combustor Air Pre-heater Pressure Drop

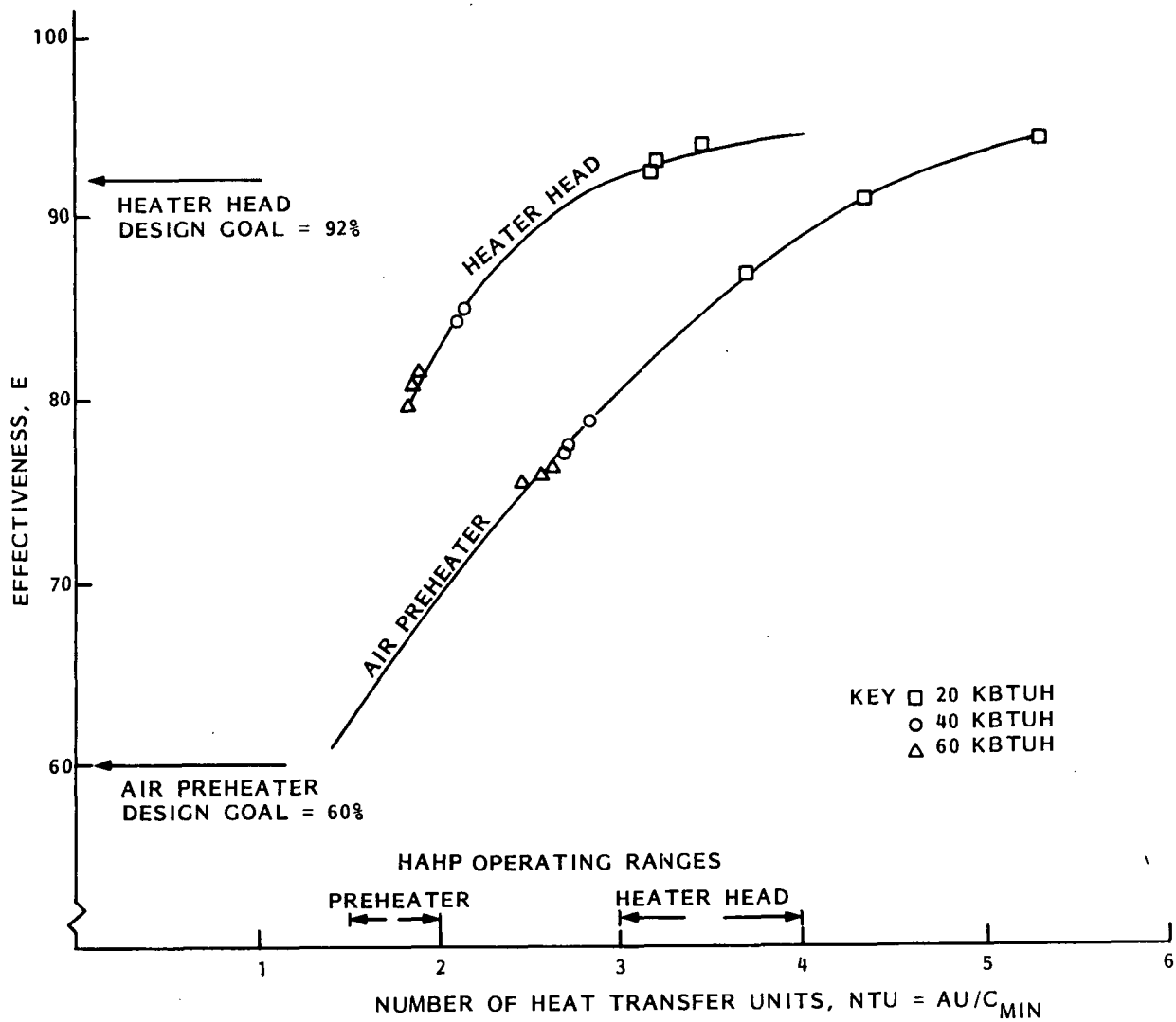

Figure 3-6. Proto 2 Combustor Heater Head and Preheater Effectiveness

In Figure 3-7, performance data from the Proto 2 Unit 1 combustor is shown in conjunction with performance data for the Proto 1 - advanced combustor. The performance data is extrapolated to the higher exhaust gas temperature levels which are expected for the HAHP system. A comparison of the two designs indicates that higher preheated inlet air temperature is characteristic of the Proto 2 design. This is the result of increased insulation thickness covering the preheater. For the 95° design point, the preheated air temperature could reach approximately 1175°F. Testing on the integrated stand will indicate if flame flashback is to be a problem. Projected average inside diameter fin temperature of the engine at the design point is 1450°F - well within the design range.

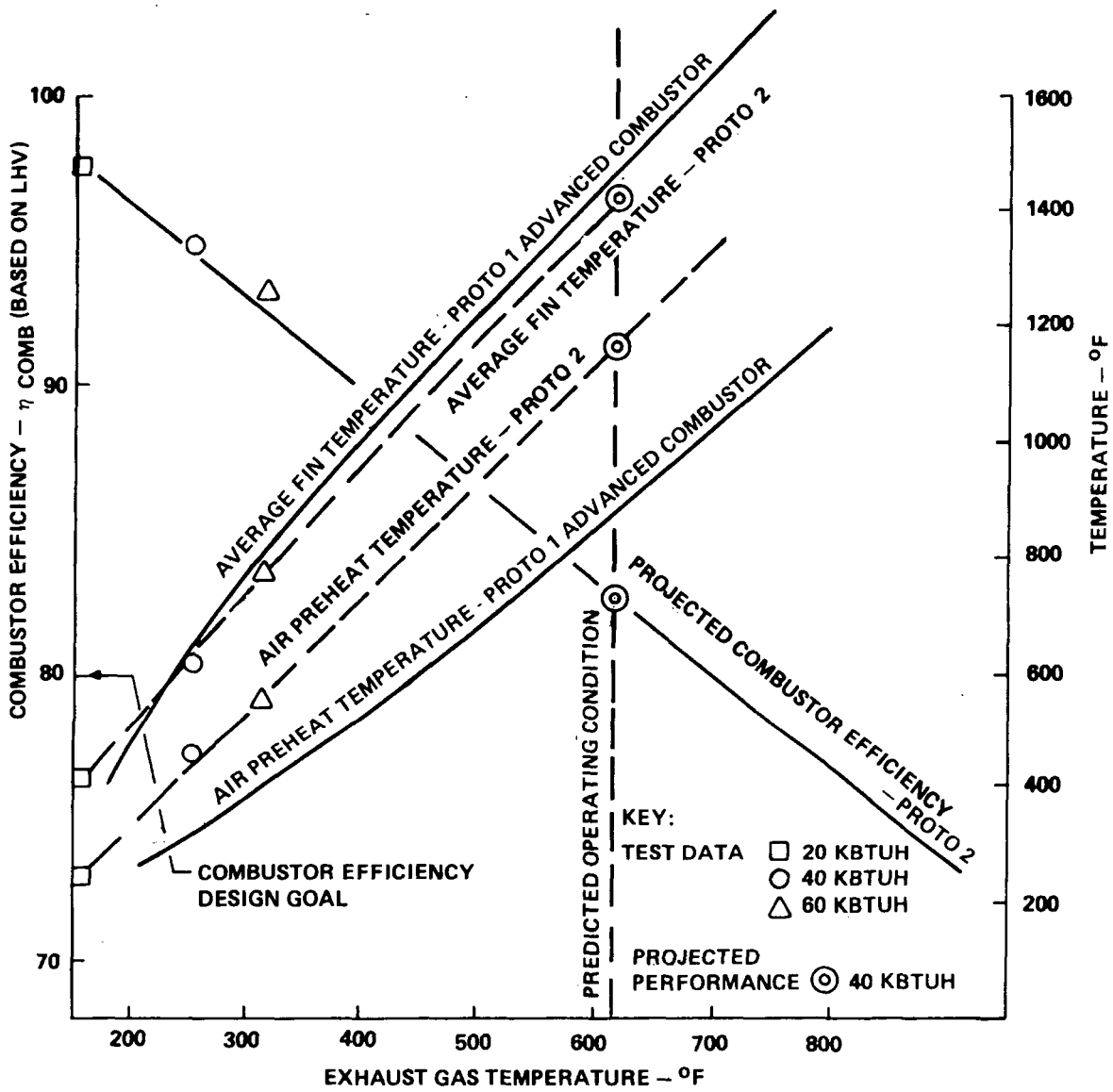

Figure 3-7. Proto 2 Combustor Efficiency, Average Fin-Air Preheat Temperatures vs. Exhaust Gas Temperatures @ 15% Excess Air

The projected combustor efficiency curve is computed based on the lower heating value of the natural gas, and accounts for energy loss to ambient from the preheater, as well as the energy loss contained in the hot exhaust gases. Under combustor component test conditions, the exhaust gas temperature is relatively low as indicated by the data displayed in Figure 3-7. Note the excellent agreement between the test data and the predicted combustor efficiency curve. Attainment of the 82.5% projected combustor efficiency goal within the HAHP system seems assured.

Gas Valve and Blower Testing

Component level testing of the two stage gas valve and variable output blower was completed during this period. Test results indicate that the gas valve and blower will meet combustor design requirements during steady state operation under expected ranges of gas supply pressure, blower output, and ambient conditions. Performance at start-up remains to be evaluated during systems test in that the facility has the capability to establish a wide range of environmental conditions.

3.2.6 ADVANCED BURNER DEVELOPMENT PROGRAM

Objectives

The advanced burner development program is directed at the development of a long-life low-cost transpiration burner element. A considerable effort has previously been directed at the development of such a burner element. The Proto 1 combustor utilized a burner element consisting of 80% porous Hoskins 875 material fabricated in a felted sheet. Continued developmental effort is directed at reducing the cost and increasing the lifetime of the metallic burner design. This program is designed to incorporate prior knowledge along with the latest materials to design a burner element meeting all design requirements.

Candidate materials identified as most promising are:

1. Proto 1 feltmetal element - with or without an outer sleeve.
2. 3M Company Nextel 312 ceramic fiber.
3. Johns Manville Cerachrome felt.
4. Multiple layered stainless steel screening.

Various configurations of these materials were tested under HAHP operating conditions. To date, the optimal burner element is constructed of feltmetal and a layer of Nextel 312 ceramic sleeving and is shown in Figure 3-12. The ceramic sleeving acts to reduce the metal burner's outer diameter operating temperature, while increasing the burner pressure drop only slightly.

The Nextel 312 is exposed to the most extreme temperatures. Although burner element cost is projected to increase slightly, burner lifetime will be increased substantially (projected at one year). Life cycle testing, and testing under more severe Stirling engine conditions remains to be performed.

Design Requirements

Design requirements of the transpiration burner element are:

- one to five year design life
- pressure drop less than 0.5 in. H_2O at 40 kBTUH firing rate with 15% excess air
- ability to withstand high temperatures (2100 - 2400°F) and thermal cycling
- uniform porosity to be maintained during entire life
- cost to be less than $5/burner on a production basis
- operation in presence of moisture, ice, trace sulfuric acid, etc.
- withstand 0.003 in. axial movement at 30 cycles/second
- tight, reliable seals at end caps and holder

Test Results

Photographs of the various burner elements considered during this program are shown in Figures 3-8 through 3-12. Figure 3-8 shows the Proto 1 feltmetal burner element. The element in Figure 3-9 consisted of a layer of Cerachrome felt wrapped around an incoloy screen. The catastrophic failure shown was attributed to non-uniform porosity which creates a local hot spot and leads to flashback, resulting in local melting of the material. A similar mode of failure explains the condition shown in Figure 3-10. This element was constructed in a similar fashion to that shown in Figure 3-10, but with an outer layer of Nextel 312 sleeving. Based on the results of these tests, Cerachrome felt was eliminated from further testing due to lack of uniform porosity which leads to high localized heat flux densities and failure due to excessive temperatures.

Figure 3-8. Feltmetal Burner Element

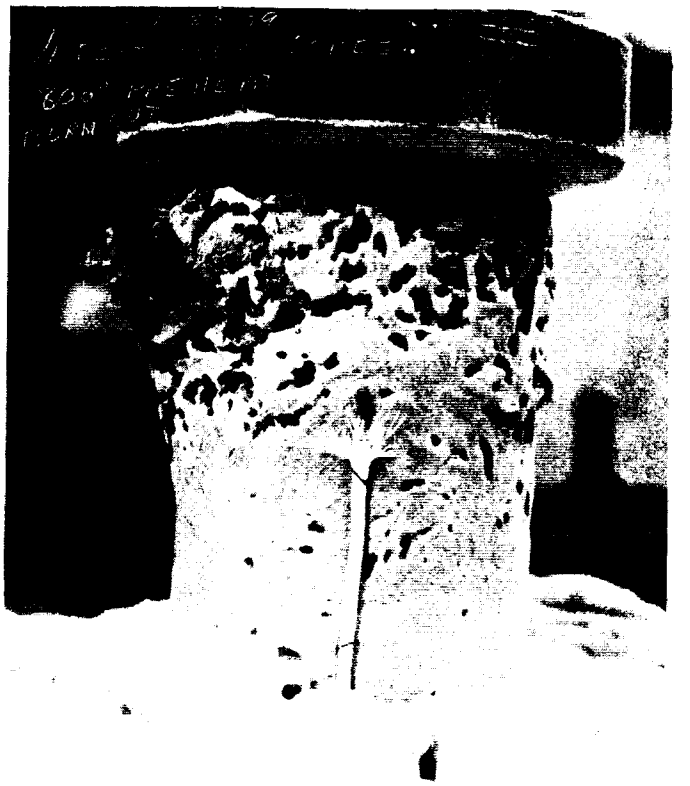

Figure 3-9. Incoloy 800 Screen/Cerachrome Felt Burner Element - Post Test Results

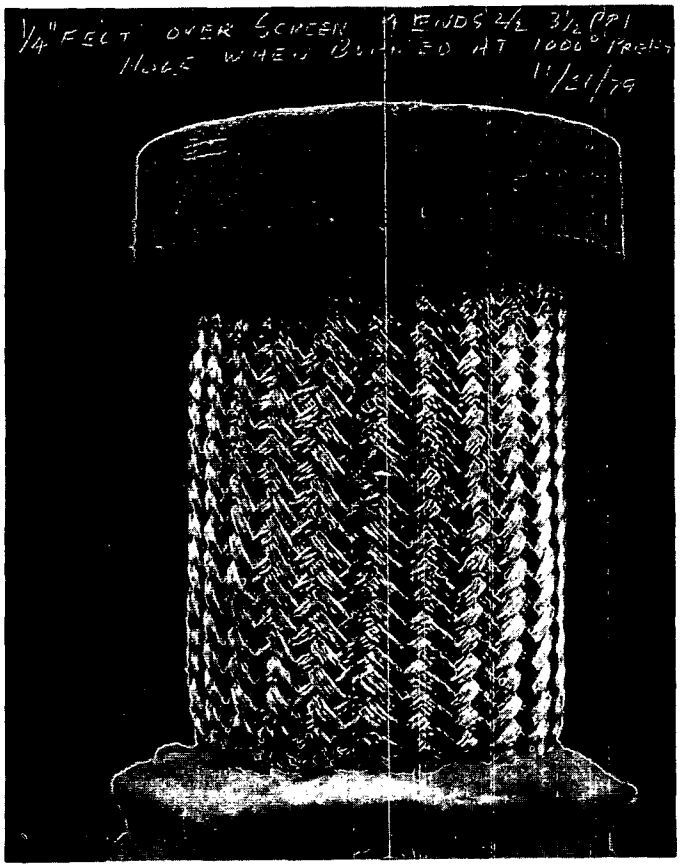

Figure 3-10. Incoloy 800 Screen/Felt/Nextel 312 Burner Element - Post Test Results

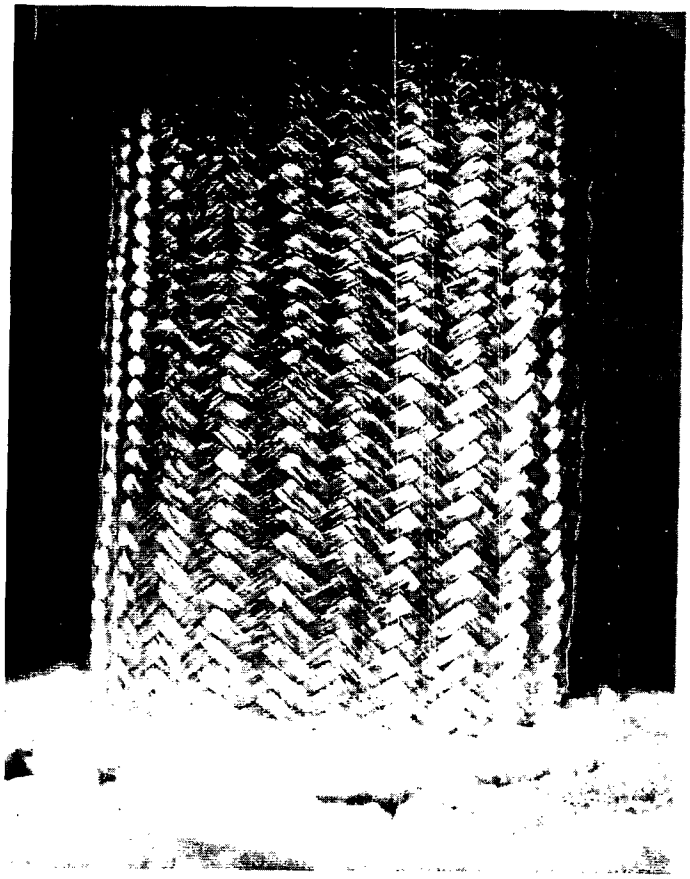

Figure 3-11. Proto 2 Low Porosity Ceramic Braided Material Burner Configuration

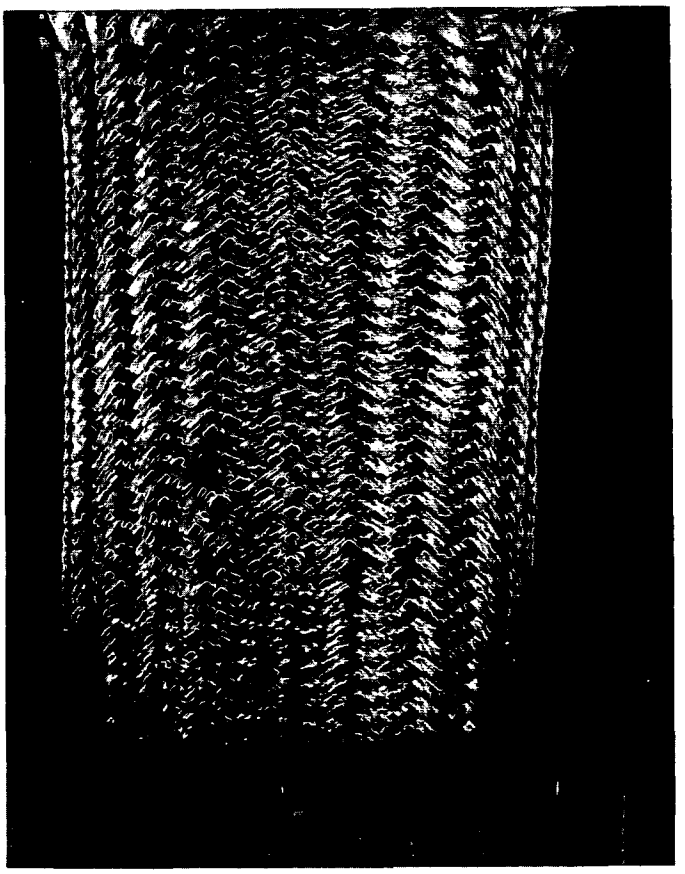

Figure 3-12. Proto 2 High Porosity Ceramic Braided Material Burner Configuration

A burner element comprised of five layers of brazed incoloy screening with a layer of Nextel 312 was also tested. The bias of the screen was alternated in order to provide uniform air/gas flow. Unfortunately the matrix did not distribute the flow as randomly as the feltmetal and alternate layering techniques remain to be studied.

Two feltmetal burner elements with different densities of Nextel 312 ceramic sleeving are shown in Figures 3-11 and 3-12. From the thermal standpoint, these elements performed similarly. However, the pressure drop across the element in Figure 3-11 was excessive due to the high density of the ceramic sleeve.

A comparison of the projected operating characteristics of the Proto 1 feltmetal burner element and the element shown in Figure 3-12 is shown in Figures 3-13 through 3-16. The Nextel 312 sleeve acts as a protective insulating cover for the feltmetal. This results in a reduction of inside diameter and outside diameter feltmetal operating temperature levels as shown in

Figures 3-13 and 3-14. This reduction in feltmetal operating temperature increases the projected burner life to one year. Projected operating temperature of the Nextel 312 ceramic sleeve is shown in Figure 3-15 and is within the 2600°F limit recommended for the Nextel 312 fiber. Figure 3-16 shows the additional pressure drop associated with the ceramic sleeving. It should be noted, however, that the projected pressure drop is within the 2 in H_2O design goal, and that the data displayed in Figures 3-13 through 3-16 has been corrected to account for a higher temperature radiation heat sink of 1300°F expected in actual operation. Life cycle and integrated testing remain to be performed. Based on test results to date, the projected lifetime of the feltmetal - Nextel 312 burner element is one year.

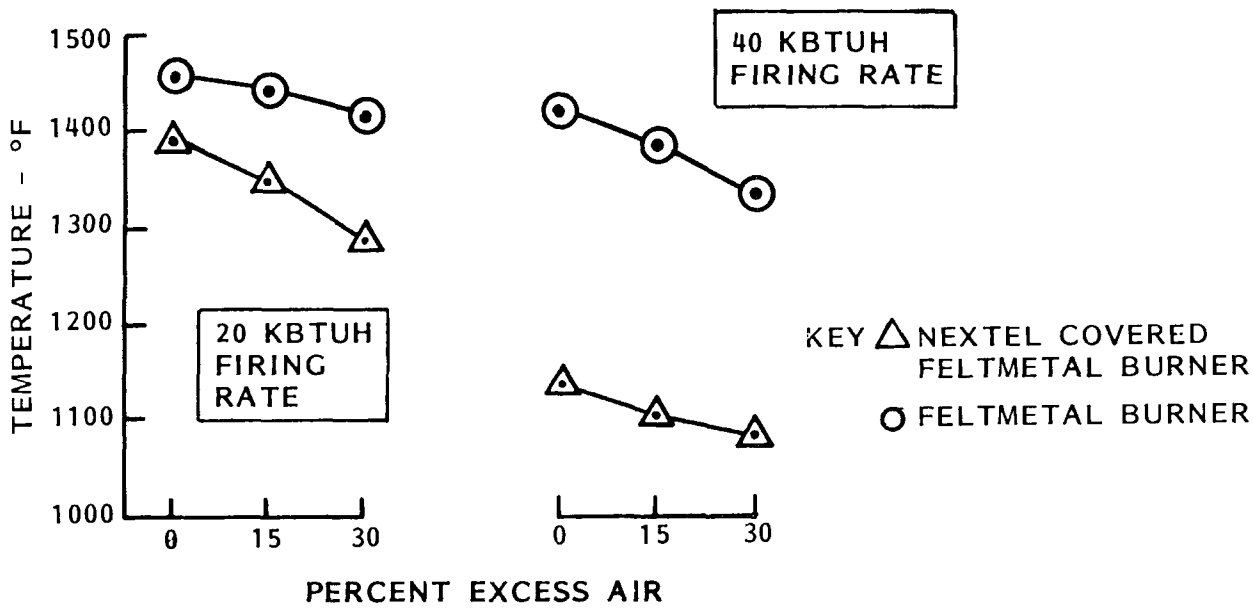

Figure 3-13. Feltmetal Inside Diameter Temperature

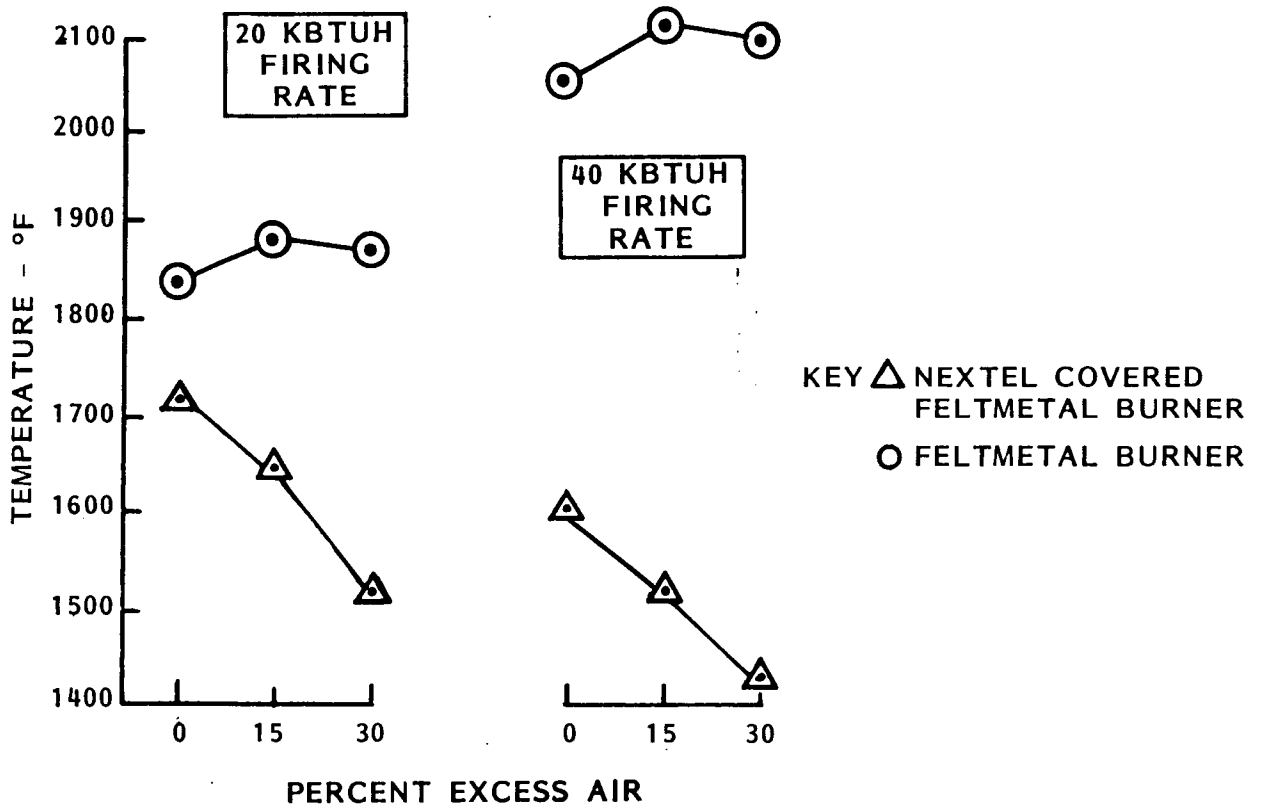

Figure 3-14. Feltmetal Outside Diameter Temperature

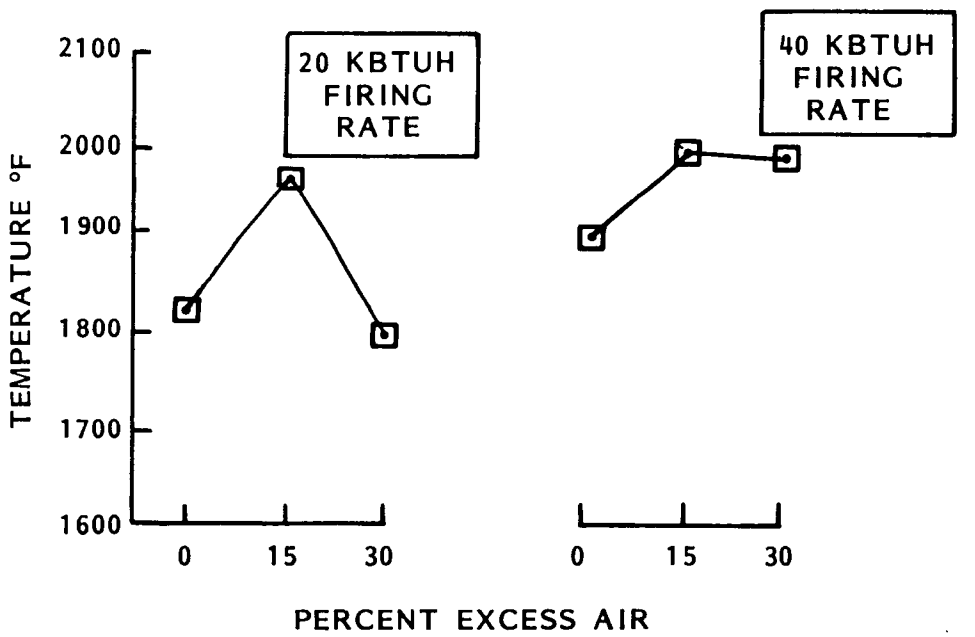

Figure 3-15. Nextel 312 Operating Temperature

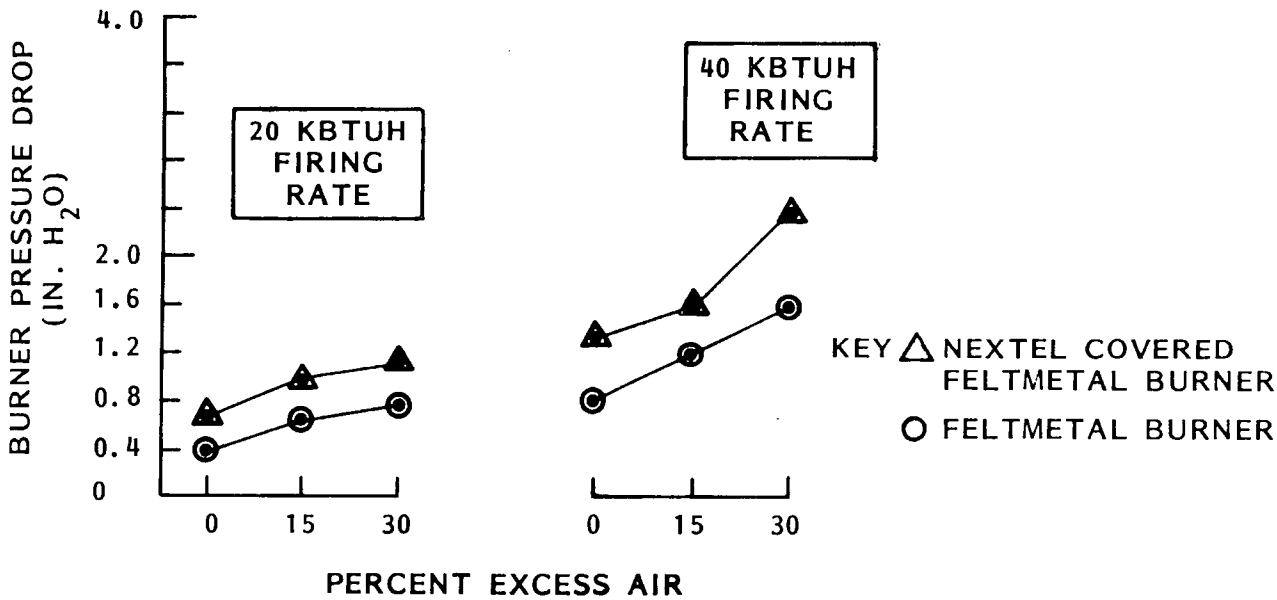

Figure 3-16. Comparison of Burner Pressure Drop Characteristics

3.2.7 PLANNED ACTIVITY FOR NEXT PERIOD

Planned activity for the next reporting period is:

1. Performance testing of Proto 2 Unit 2
2. Combustor performance evaluation upon integration with engine and compressor
3. Continued evaluation of the revised design of the blower damper mechanism

3.3 ENGINE

3.3.1 SUMMARY

During this reporting period the Proto 2 Stirling engine effort progressed through approximately 95% of the fabrication and procurement cycle, with one complete set of engine parts having been completed. The first engine was assembled and subsequently installed in the Integrated Test Facility, where it is scheduled to be mated with the compressor during January 1980. Engine instrumentation wire harnesses have been completed except for the leads interfacing with the compressor. The following paragraphs provide a review of the more pertinent fabrication details, and present photographs of the completed major engine components.

3.3.2 FABRICATION

Status

Fabrication of the Proto 2 engine components was completed during this reporting period, with the exception of a few detail parts for engine assemblies 2 and 3. The unfinished parts are in final machining and/or inspection, and are scheduled to be completed by mid-January. Photographs of the major engine hardware components and assemblies are shown in Figures 3-17 through 3-23. These photographs show, respectively, the engine displacer, regenerator, power piston, heater head fin and tube components, plus the engine housing weldment, housing assembly and heater head assembly.

Engine Housing Weld Development

Problems were encountered in completing the engine housing weldment assembly due to difficulties in electron beam welding the cap and/or flange to the housing cylinder. Lack of weld penetration during initial processing, and excessive porosity in subsequent repair welds

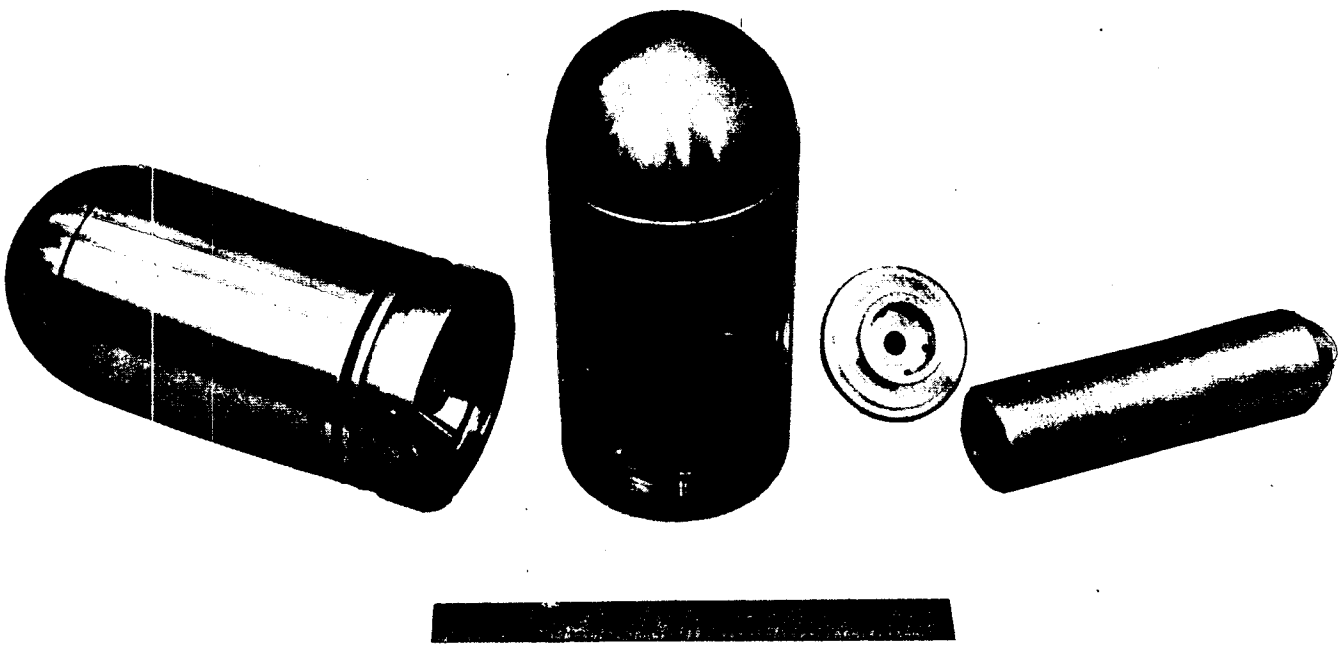

Figure 3-17. Engine Displacers, Stop and Rod

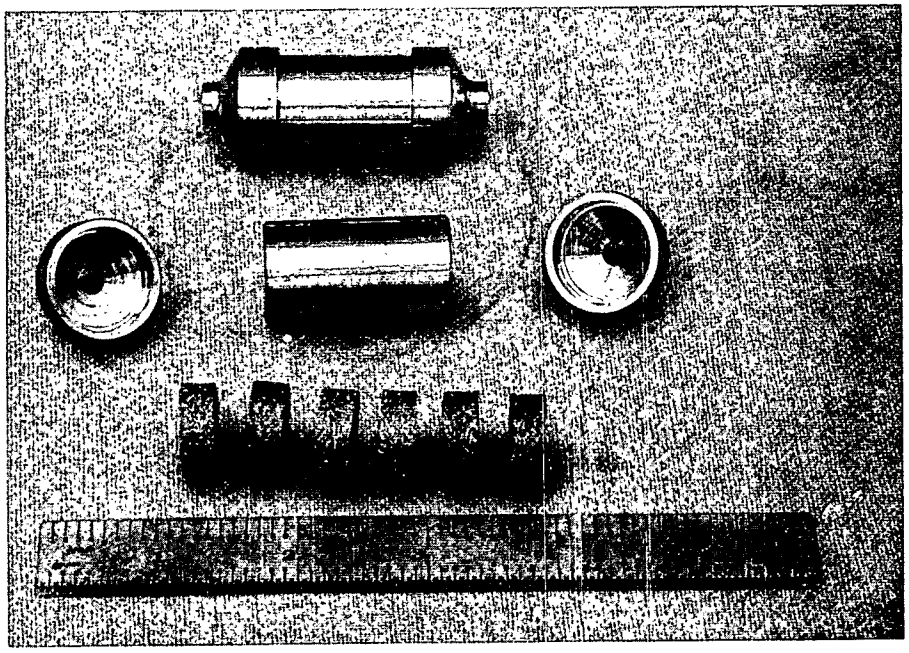

Figure 3-18. Engine Regenerator Assembly

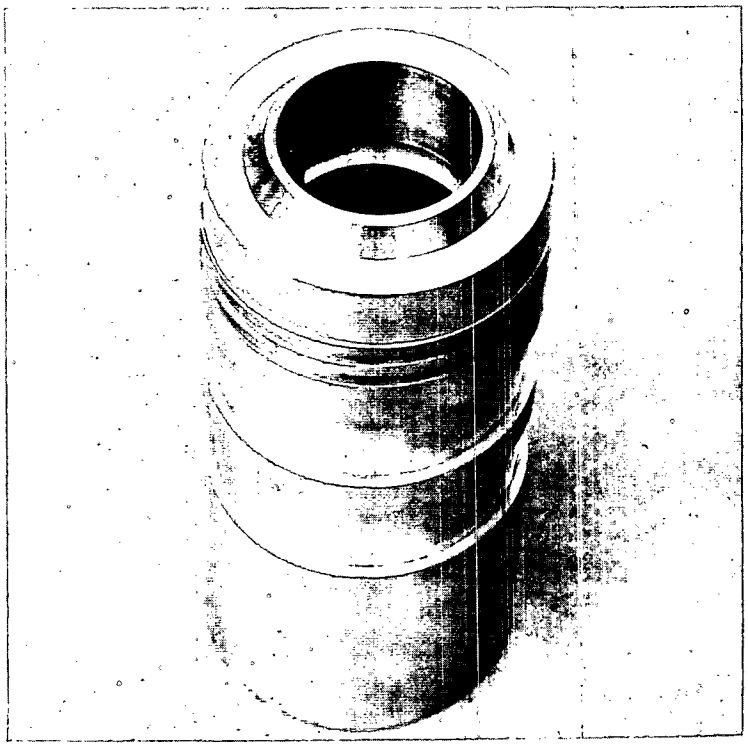

Figure 3-19. Proto 2 Engine Power Piston

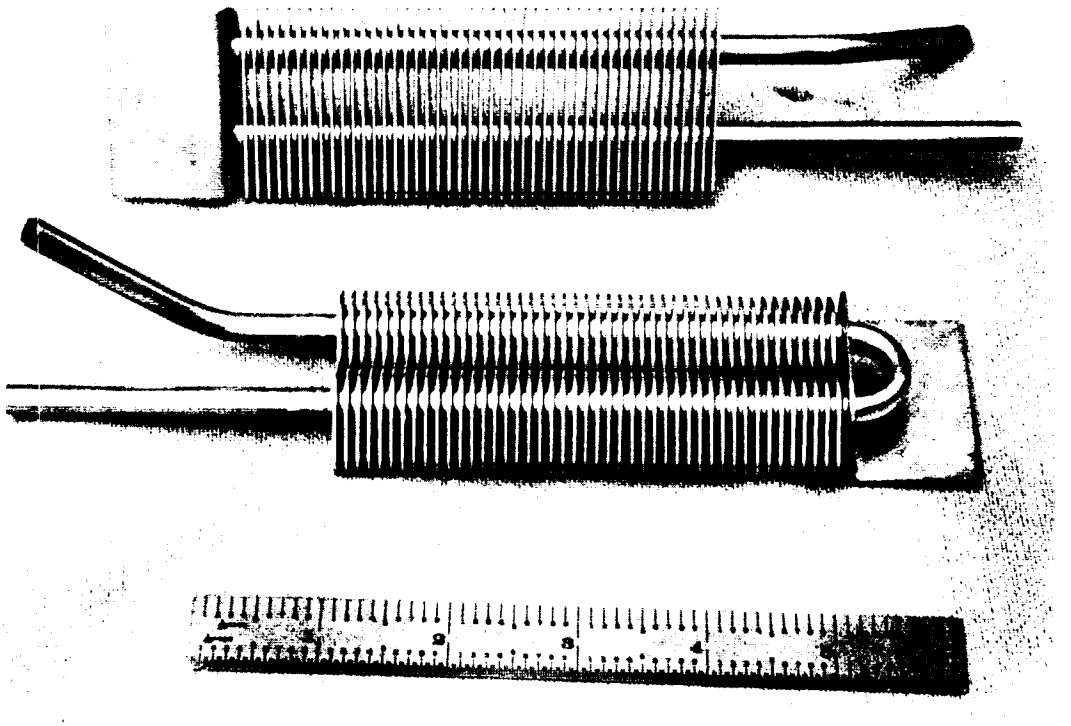

Figure 3-20. Heater Head Fin and Tube Assemblies

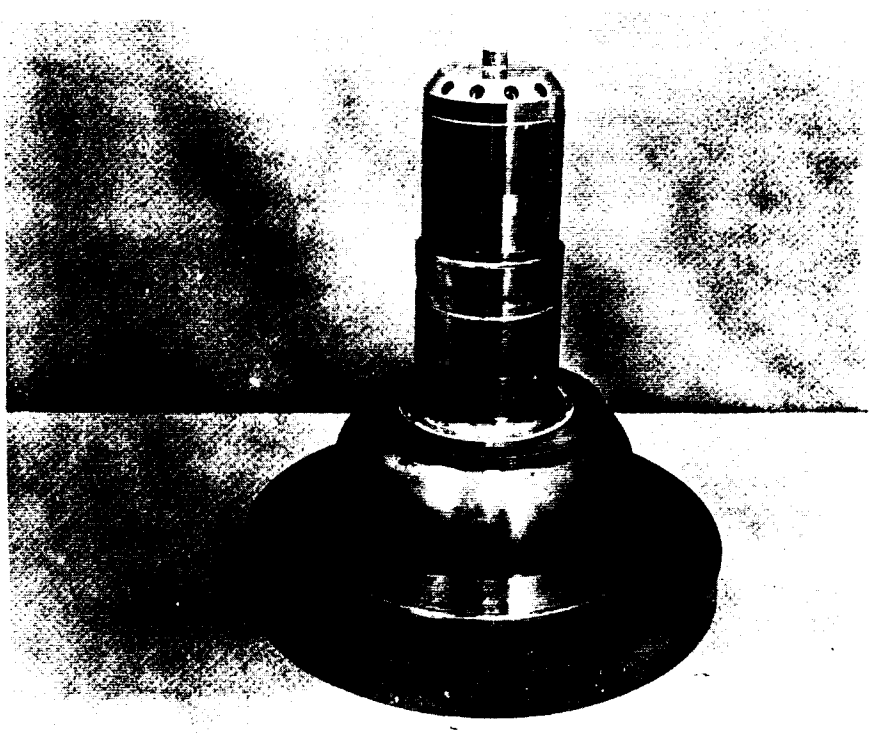

Figure 3-21. Engine Housing Weldment

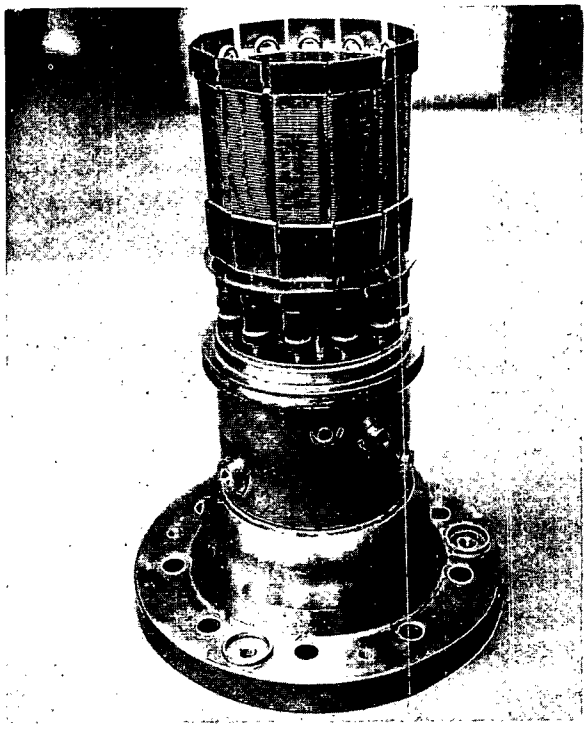

Figure 3-22. Proto 2 Engine Housing Assembly

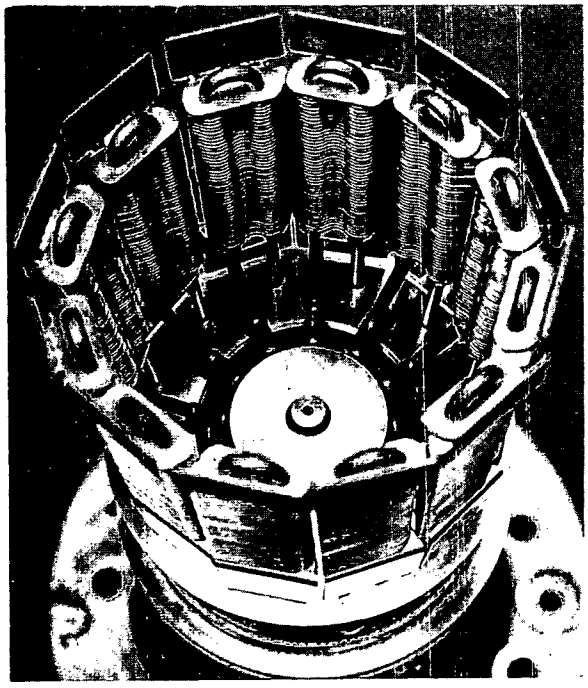

Figure 3-23. Proto 2 Engine Heater Head Assembly

were experienced, even though weld samples had been successfully prepared to establish weld parameters (voltage, amperage, focus, etc.). The weld parameters were modified and the weld problem resolved, however, and the resulting engine fabrication schedule slip has not affected the overall program schedule.

Engine Support Stand Assembly

The first engine support stand assembly has been fabricated, received, and installed in the Integrated Test Facility. A photograph of the stand assembly is shown in Figure 3-24.

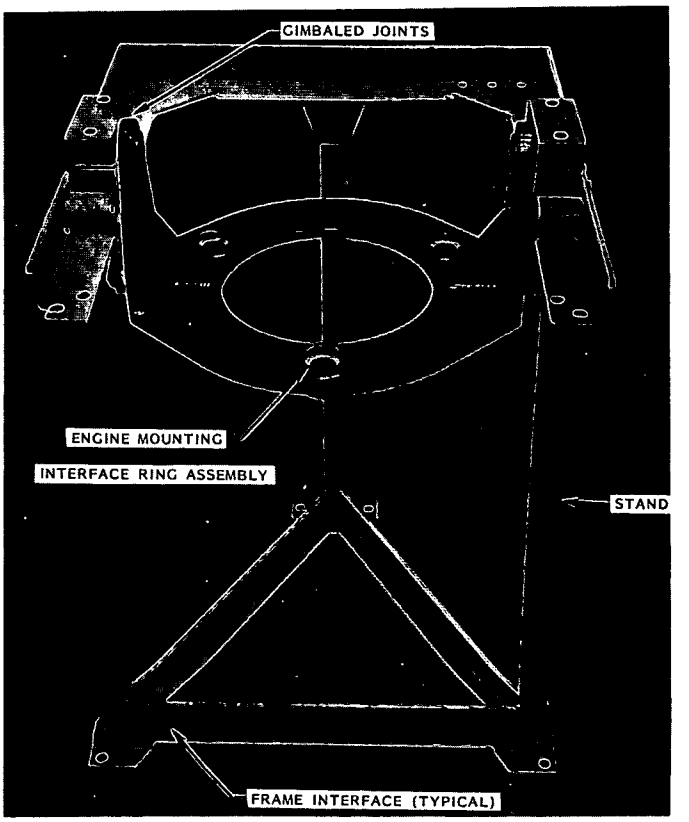

Figure 3-24. Proto 2 Pivoting Engine Stand Assembly

3.3.3 ENGINE ASSEMBLY

Status

Assembly of the first Proto 2 Free Piston Stirling Engine (FPSE) was initiated during this reporting period. The engine housing assembly was completed with the installation of the

liner and the attachment of the hot side insulation and engine instrumentation. The displacer/power piston reciprocating subassembly was also completed and installed in the engine housing assembly, and the resulting combined assembly was subsequently installed in the Integrated Test Facility.

Heat Exchanger Flow vs. Pressure Drop

Steady state flow vs. pressure drop tests were conducted on the first Proto 2 engine housing heater head assembly to determine the pressure drop characteristics of the assembly in its "as built" condition. The purpose of the test was twofold, first to establish baseline data so that subsequent tests can be completed to identify changes in pressure drop (if any) as a function of engine running time, and secondly, to permit comparative evaluations with assemblies having matrix porosities of different values. Figure 3-25 presents a schematic diagram of the test set-up, and Figure 3-26 provides curves plotted from the resulting test data, for both nitrogen and helium gas.

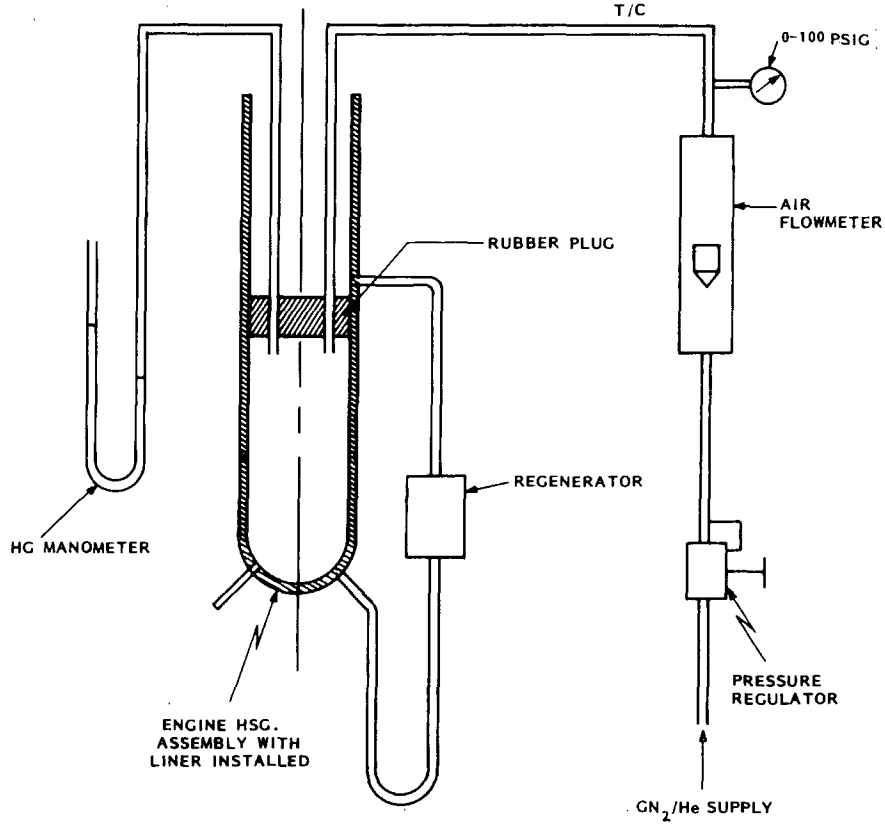

Figure 3-25. Schematic Diagram of Heater Head Pressure Drop Test

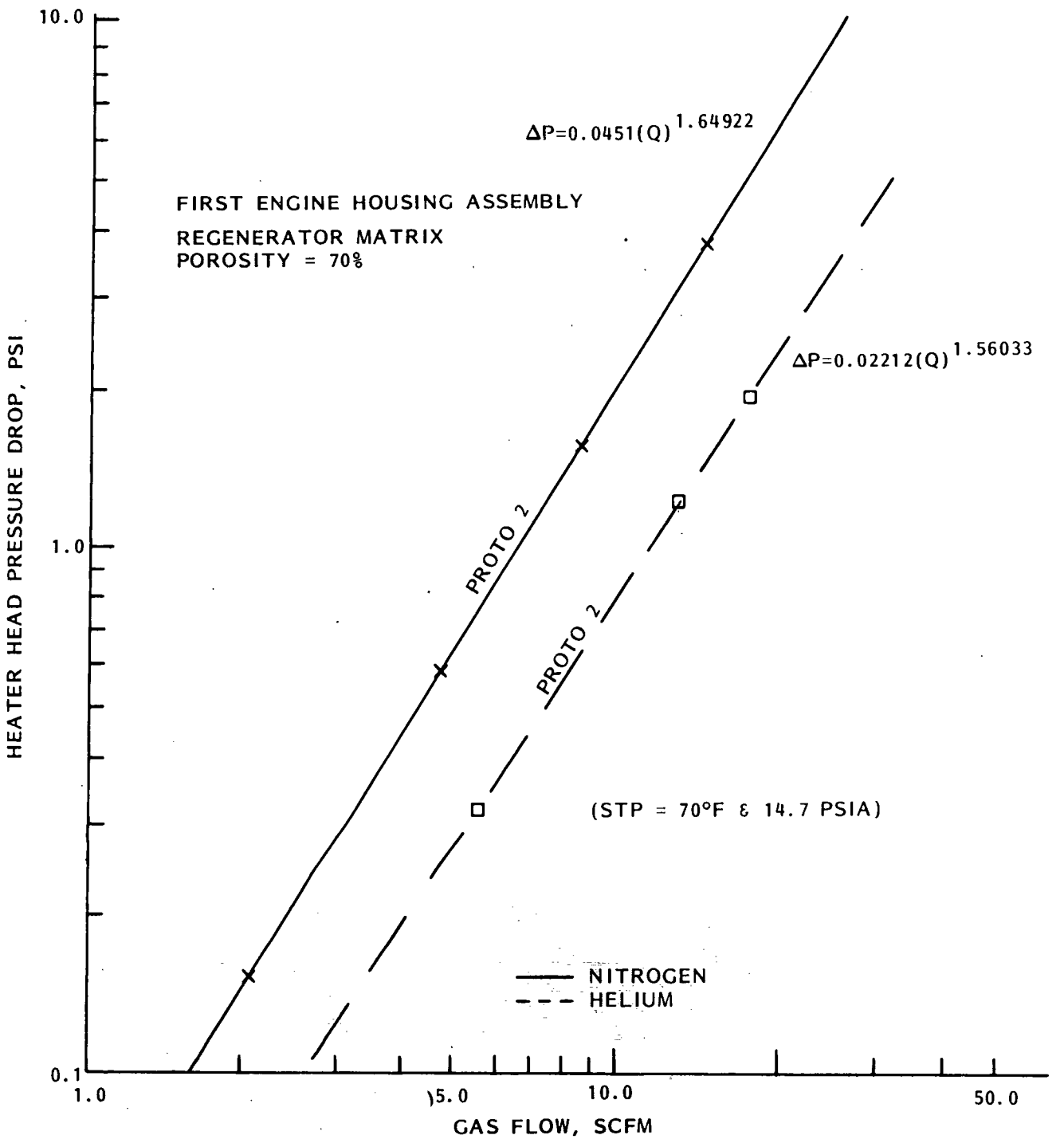

Figure 3-26. Proto 2 FPSE Heater Head Pressure Drop

3.3.4 ELECTROMAGNETIC STARTER

Design Requirements

Analyses and experience with the Proto 1 Free Piston Stirling Engine indicate the need for a positive starting mechanism for the FPSE. Further analyses indicate that an electromagnetic starter, designed to pulse the displacer with reference to the power piston and engine housing, can provide the necessary positive start capability, with the additional attractive feature of being an internally mounted mechanism. A starter force of approximately 5 pounds throughout a stroke of 0.3 inches was established as the design requirement.

Design and Fabrication

The electro-magnetic starter design for the Proto 2 engine configuration is shown in Figure 3-27. As shown in the drawing, the starter is a tapered plunger type solenoid with the plunger mounted to the end of the displacer rod, and the coil housing assembly mounted inside the power piston assembly. The starter will magnetically generate reciprocating motion of the

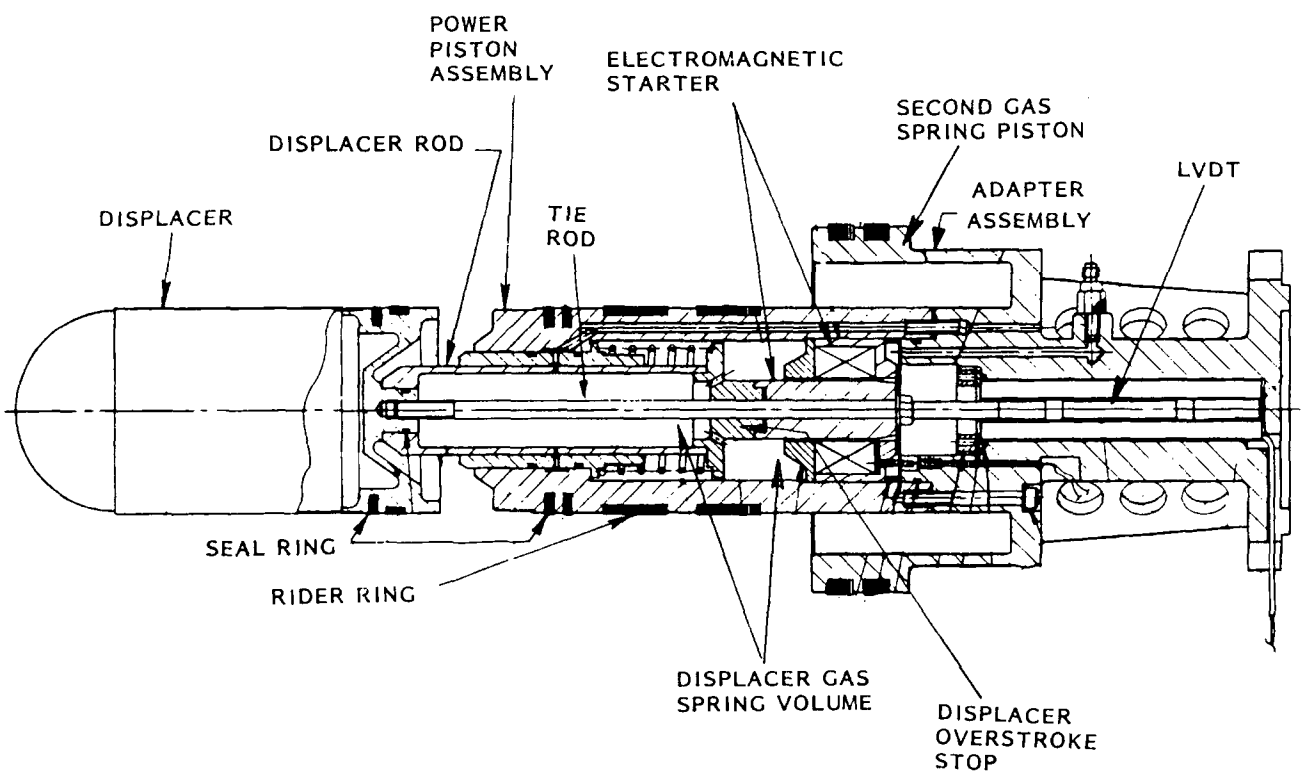

Figure 3-27. Electromagnetic Starter, Displacer, Piston and Adapter Assembly

displacer relative to the power piston assembly and the engine housing assembly. Motions of the moving displacer and piston masses are thermodynamically amplified to where they become self-sustaining. Once the engine has started, the magnetic starter pulsing is discontinued.

The detail design was completed, the component drawings issued, and the component parts fabricated during this reporting period.

Assembly and Bench Test

The power piston/displacer/adapter assembly, containing the magnetic starter components, for the No. 1 engine assembly was assembled, and bench tests were completed. Tests were conducted on the starter assembly to determine its operating characteristics regarding force vs. displacement, temperature rise, and frequency response.

The force vs. displacement characteristics of the starter are presented in Figure 3-28. As shown by these data, the starter significantly exceeds its minimum design goal in both force and stroke capability. The temperature rise test results were also very encouraging with a coil temperature rise of only 38°C (68°F) over a period of 24 minutes with a continuously applied power input of 18 watts (at approximately 26 volts). This temperature rise was calculated from the measured change in coil resistance.

Frequency response of the assembled starter mechanism was evaluated using two coil excitation circuit designs. A simple circuit which supplies the coil with constant voltage while providing rated current only at steady state conditions was evaluated and found to have limitations if the displacer assembly requires excitation at 30 Hz. Such limitations can be eliminated if the circuit is configured to switch a current source at higher voltages through a switching transistor. Both circuit approaches have been bench tested, modified and are available for engine evaluation during integrated testing.

In December the starter was given a preliminary checkout in a partially assembled engine (i.e. no compressor). During this checkout, displacer motion resistance was observed in

the start-up mode. Damping due to displacer seal friction is suspected as the cause. Reduced friction seals have been fabricated in case damping is still a problem under test conditions.

Design of a second alternate starter has also been completed and fabrication has been initiated. The plunger has been redesigned in this configuration to provide improved pulsing in both directions.

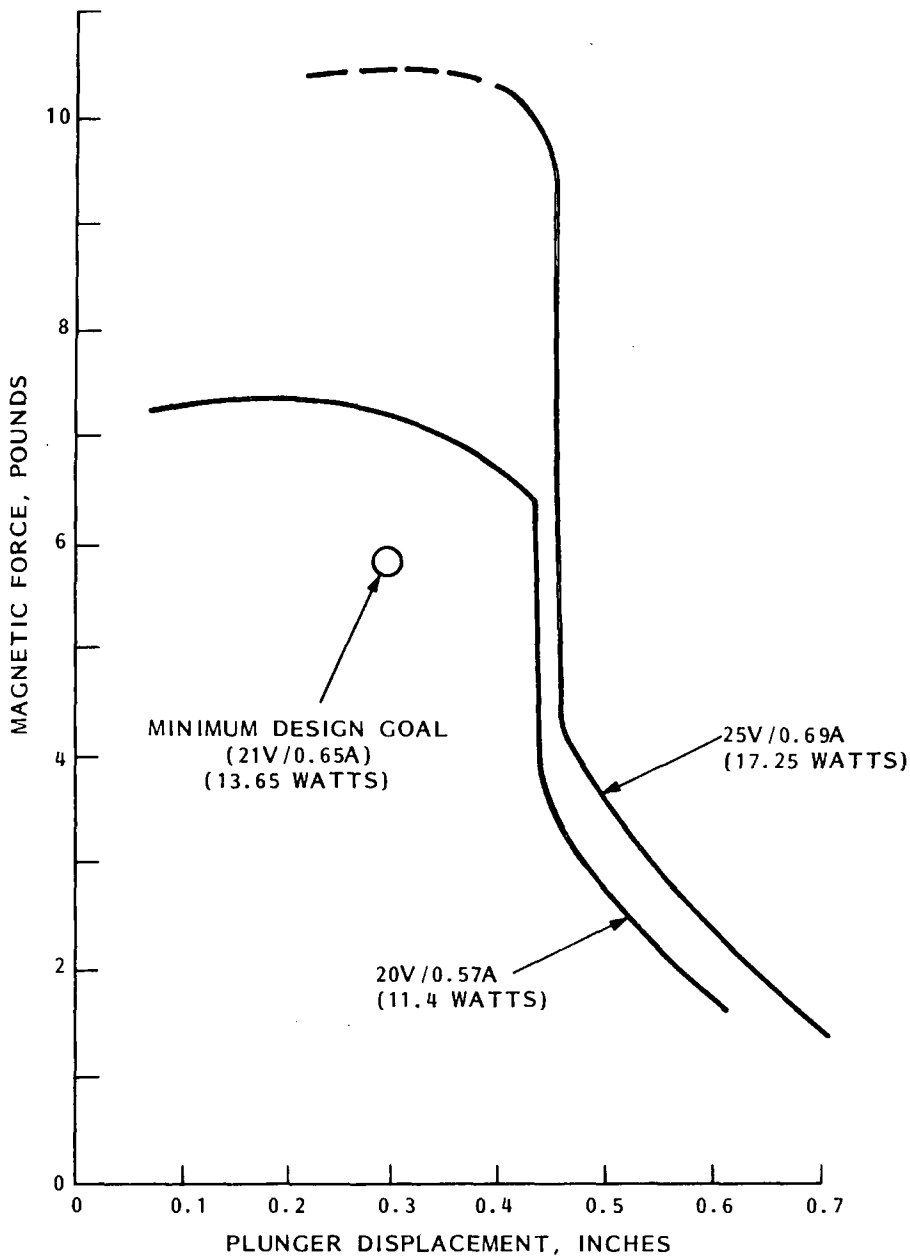

Figure 3-28. Proto 2 Magnetic Starter Force Characteristics

3.3.5 SEAL AND BEARING DEVELOPMENT

Summary

The Free Piston Stirling Engine incorporates seal rings, rider rings, and linear bearing pairs dependent upon dry film lubricant type bearing materials for low friction and extended wear life. A seal and bearing development program was initiated to identify and test a variety of materials and material combinations offering possibilities for use in this application. A literature search was made to accumulate pertinent information and, concurrently, a number of test facilities were investigated to determine if equipment and techniques are available for proving the relative worth of one candidate seal or bearing system over another. As a result of this investigation, candidate materials were identified and selected, but no existing test facility was located with the capability of reasonably reproducing the wear conditions anticipated within the engine. A wear test rig was subsequently designed to meet the test requirements. See Appendix A of this report for the detailed test plan written and issued for this test effort.

Test Rig Design

The in-house test rig was designed as a relatively simple assembly, using a drive mechanism similar to that utilized in the endurance life testing of the refrigerant tubular spring coils. The rig consists of an electric motor driving a fixed stroke crank mechanism (a modified single cylinder gasoline engine) which in turn drives a simulated FPSE displacer rod and power piston assembly mounted in a test cylinder assembly. An external helium pressure source will be used to establish a regulated base pressure within the test cylinder. The reciprocating motion of the "power piston" will alternately compress and expand the sealed gas to generate the desired pressure difference across the piston seal rings. The peak-to-peak pressure difference generated will be set by adjusting the base pressure level. Electric thermostat-controlled heaters will maintain the desired 250°F operating temperature. The power piston was designed to accept standard Proto 2 power piston seal and rider rings. Figures 3-29 and 3-30 depict the wear test cylinder assembly and wear test fixture, respectively.

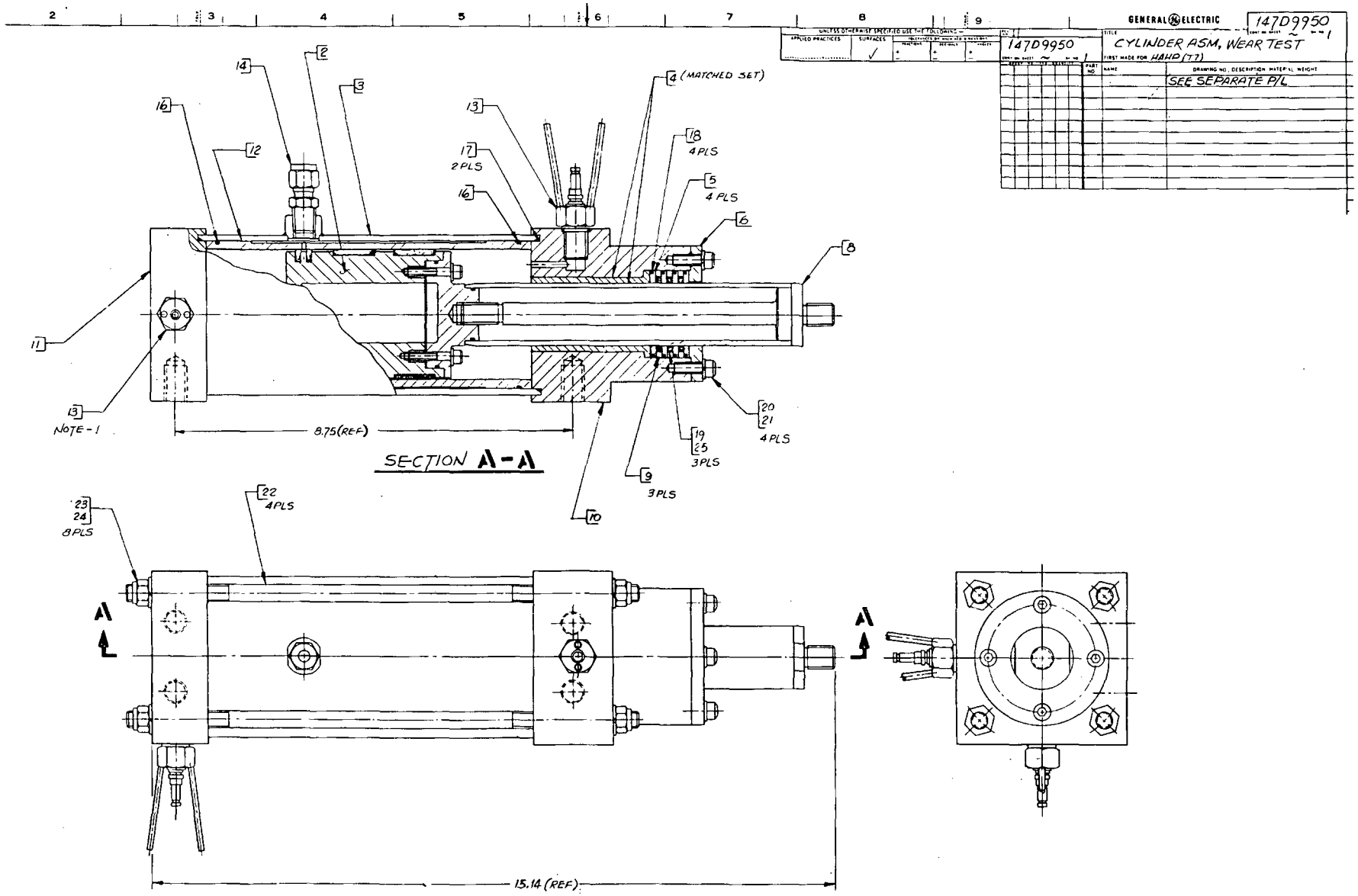

Figure 3-29. Wear Test Cylinder Assembly

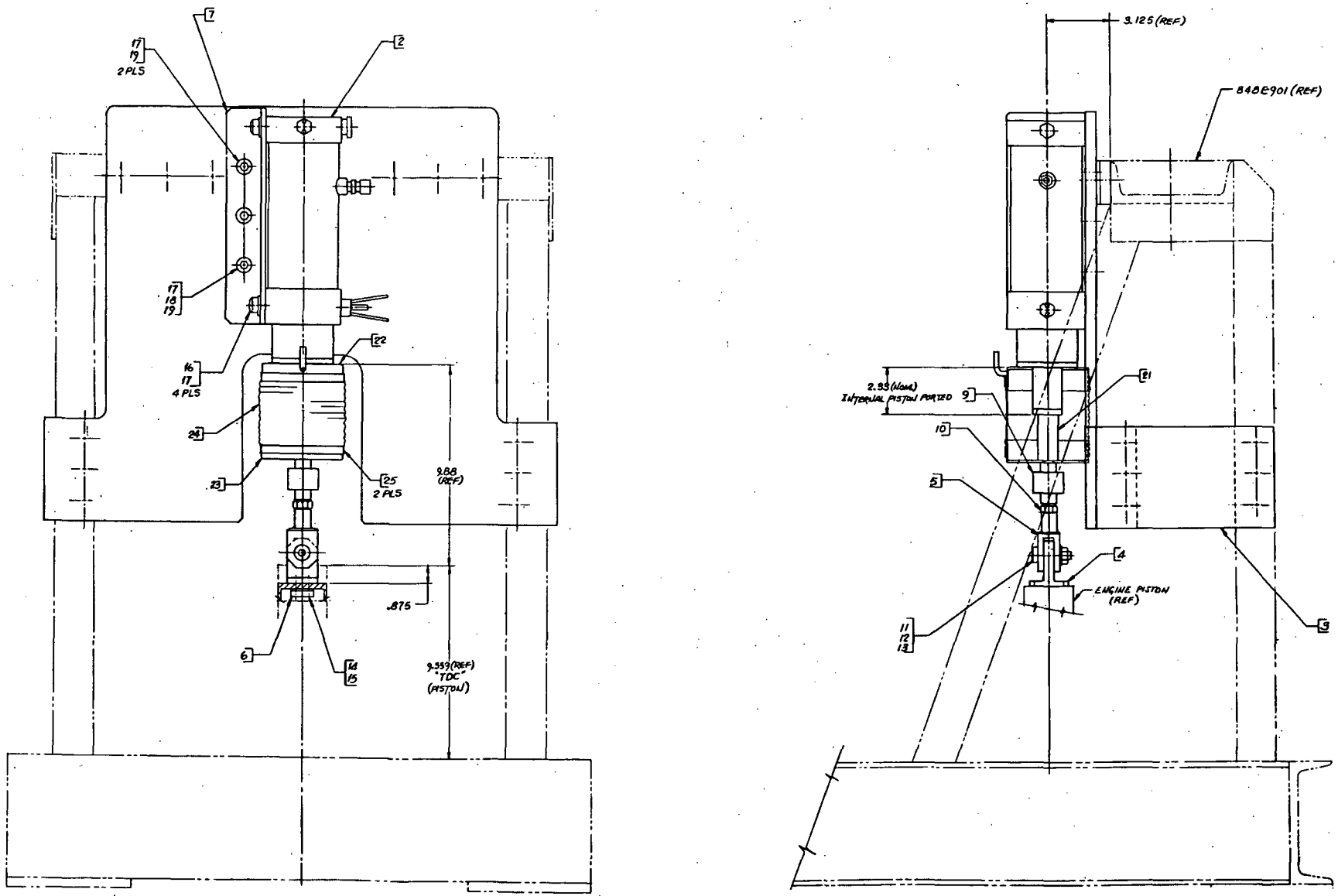

Figure 3-30. Wear Test Fixture

Fabrication

The detailed layout of the material wear test stand and test fixture was completed in October and advance orders were written for long lead items (including seal and rider rings) at that time. The material wear test stand and test fixture assembly and detail drawings were completed in December. Vendor selection and procurement was also initiated in that reporting period.

3.3.6 TRANSIENT LOAD ACCEPTANCE/OVERSTROKE PROTECTION

System Description

The transient load acceptance/overstroke protection system is required to control engine piston stroke during all load conditions such that piston/piston stop collisions are eliminated. In order to accomplish this, a maximum system response time of 16 milliseconds is required for 30 Hz operation.

The transient load acceptance/overstroke protection system consists of a Hall-effect magnetic position sensor mounted to the power piston. This position sensor feeds an electronic circuit which modulates a valve. The valve vents working space gas to bounce space gas, thereby controlling the pressure differential across the piston, and, hence, piston stroke.

Status

During the previous reporting period several design concepts were generated and evaluated. Table 3-3 delineates the options evaluated. After careful evaluation, concept number 8 was selected due to the reasons summarized in the table. The hardware design of this concept was completed during the current reporting period and all components have been ordered.

3.3.7 PLANNED ACTIVITY FOR NEXT PERIOD

Activities planned for the Proto 2 engine during the next reporting period include the completion of fabrication of the remaining components for engine assemblies 2 and 3, completion of the assembly of engines 1 and 2, and independent installation of these engines into the Integrated Test Stand for completion of the Integrated Test effort.

Table 3-3. Transient Load Acceptance and Overstroke Protection Options

Concept	Comment
1. Control engine piston stroke via a valve which vents compression space to bounce space. This valve is driven by ΔP between compressor suction and discharge lines (if sufficient $\Delta P > 100$ psi does not exist valve will vent).	• Potential leakage from 1500 psi helium to 300 psi refrigerant (both gases would be present in same valve). • Provision must be made for alternate high and low pressure on each of the suction and discharge lines. • Valve must have an override to close it on start-up.
2. Pressure transducer/transducers on second gas spring which operates the same valve described in Concept 1.	• Engine piston stroke center position variation complicates the trigger level and range settings of each transducer. • Probably would require two transducers.
3. Mechanical vent around power piston (compression space to bounce space) when piston overstrokes.	• Engine piston stroke center position variation complicates design.
4. A third gas spring to control power piston overstroke.	• More seal problems. • Complicates system dynamics.
5. Same as 4 above except use pressure transducers to drive by-pass valve described in Concept 1	• Engine piston stroke center position varies during operation.
6. Mechanical spring to limit power piston stroke.	• Spring system would be too large. (Equivalent of 4 automobile springs.)
7. Electromagnetic coil around power piston to limit piston travel.	• Size and amount of copper is prohibitive.
8. Piston sensor on engine power piston to drive by-pass valve described in Concept 1.	• Positive means of detecting piston stroke. • Independent of variations in center position of stroke. • Solenoid override required for start-up.

The electromagentic starter will also be tested in the fully assembled engine during the next reporting period.

Assembly of the material wear test stand will be completed and testing initiated. During the next reporting period, the transient load overstroke protection system will proceed with the following items:

1. Design, fabrication and de-bugging of the electronic circuitry.

2. Integration of the electronic circuit and valve for bench testing.

3. Installation on the prototype engine and initiation of testing.

3.4 COMPRESSOR

3.4.1 SUMMARY

The Proto 2 inertia compressor fabrication was completed and testing begun during this reporting period. The first of the three compressor units was assembled and installed on the compressor test stand for component testing at simulated engine operating conditions. Functional problems were encountered with the compressor piston operating unsymmetrically. Several modifications to improve "centered" operation were tested, the underlying cause of the problem was identified, and the hardware modifications were implemented. The majority of the performance evaluations will be performed during the next reporting period.

The following section presents these activities in addition to those relating to the satisfactory completion of the fatigue testing of the tubular spring coils and procurement activities for the compresor gas spring pressure regulator.

3.4.2 COMPRESSOR FABRICATION AND ASSEMBLY

The fabrication of three sets of compressor components was complete by mid-reporting period. Mechanical and assembly inspections of the machined components identified discrepancies, primarily in surface finishes, that required rework. The first unit was subsequently assembled without difficulty and installed on the compressor component test stand.

The components of the compressor are shown in Figure 3-31. In the foreground are the pistons, connecting rod and wrist pins which along with the suction and discharge valve assemblies on either side constitute the major dynamic (interior) components. The two cylinder housings shown just above the piston hardware are separated by the mid-seal housing

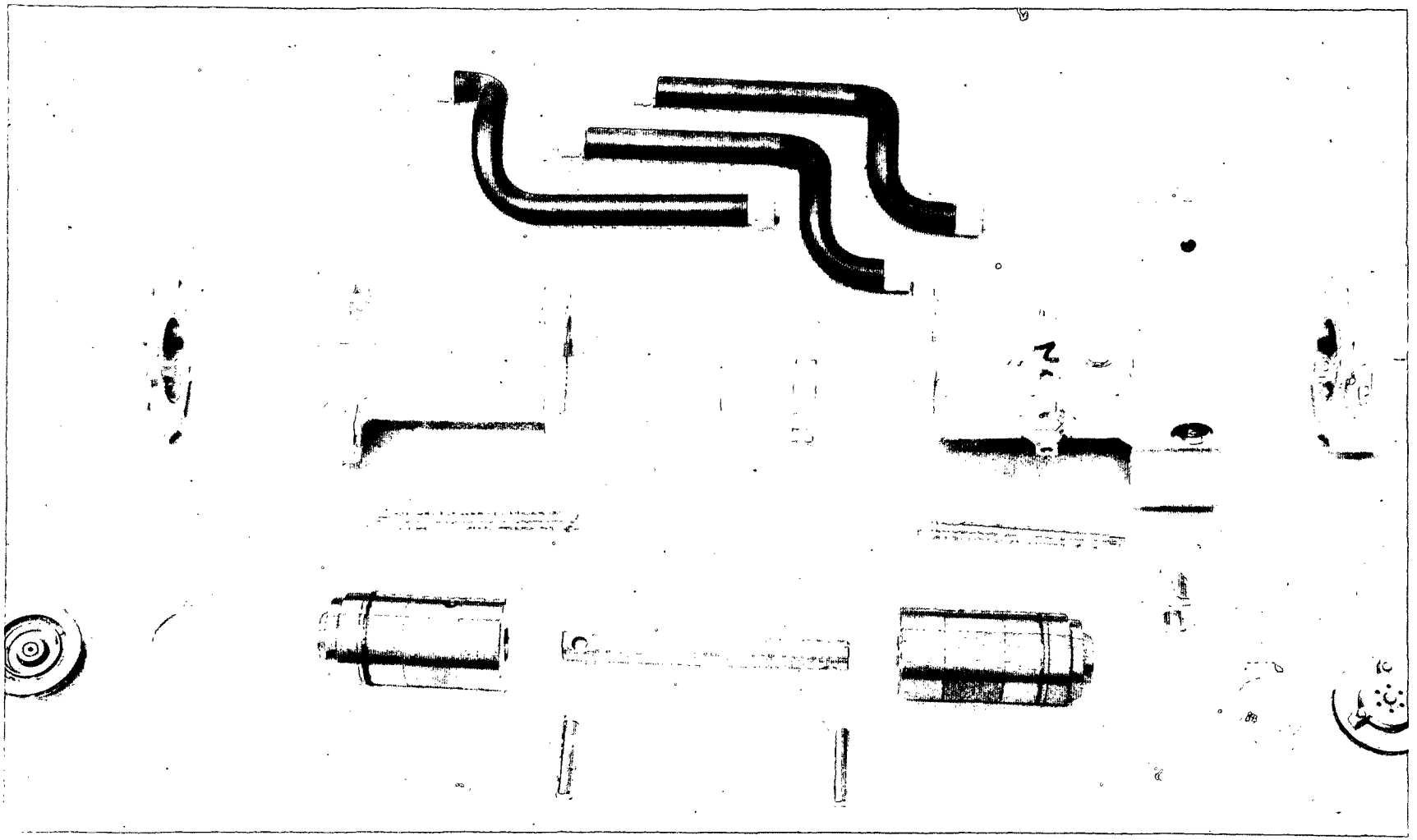

Figure 3-31. Proto 2 Linear Inertia Compressor Components

and sealing components for the connecting rod. When assembled, the volumes between the mid-seal housing and the rod ends of the pistons form the upper and lower cylinder gas springs. The outside ends of both cylinder housings are constructed to form the suction manifold tubing (2 suction lines, 1 discharge line). The parts are illustrated at the center top portion of the figure. The upper cylinder housing is also ported to interface with the tubular spring suction coils. The cylinder heads positioned outboard of the housings form the discharge manifolds and provide for retention of the suction/discharge valve assemblies. Figures 3-32, 3-33, 3-34 and 3-35 exhibit various detailed features of the cylinder assemblies, mid-housing and heads of the compressor assembly. A more detailed discussion of the compressor design was presented in the previous semi-annual report.

Close observation of the compressor components illustrate the significant amounts of machining necessary to meet the targeted weight requirement. This requirement is dictated by the combination engine/compressor design and directly contributes to the overall operating frequency. A breakdown of the various component weights is shown in Table 3-4 and as noted, the weight goal was achieved.

3.4.3 COMPRESSOR TESTING

Compressor installation, instrumentation calibration and facility checkout were completed, and testing of the compressor was initiated in November. The compressor/facility interfaces are illustrated in Figure 3-36. Testing has been performed with a simulated engine stroke of 1.12 inches and at various frequencies up to 28 Hz. Testing during this period and early into the next was primarily a functional checkout of the assembled unit. An undesirable tendency for the compressor piston subassembly to operate off-center, biased toward the lower cylinder, was encountered and lengthened this phase of testing. Several modifications were made with positive results, thereby reducing the level of off-center operation, but this did not eliminate the phenomenon completely. Additional changes are currently underway to resolve the total problem.

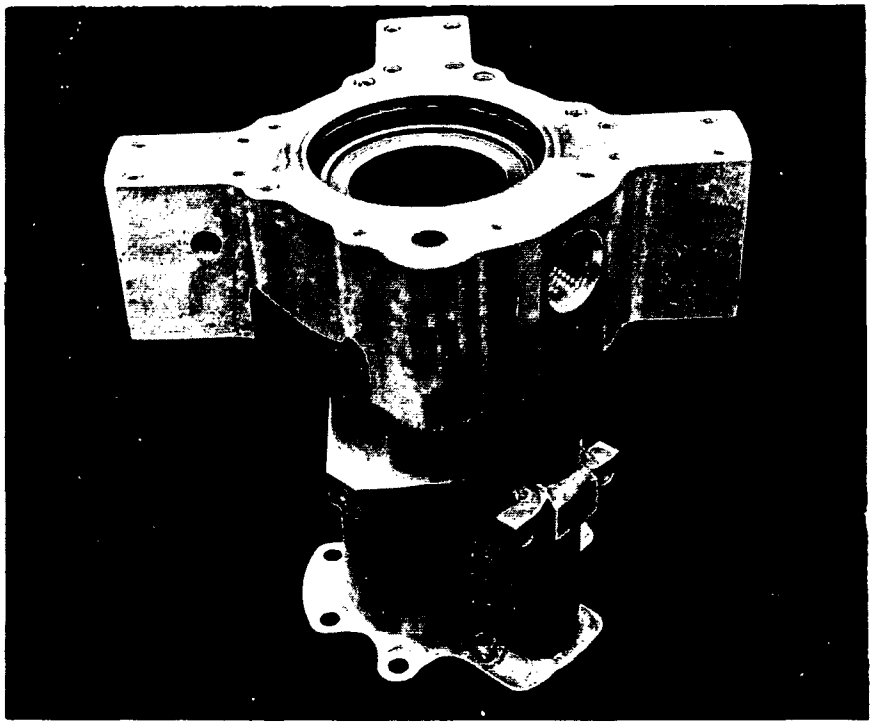

Figure 3-32. Proto 2 Compressor - Upper Cylinder Assembly

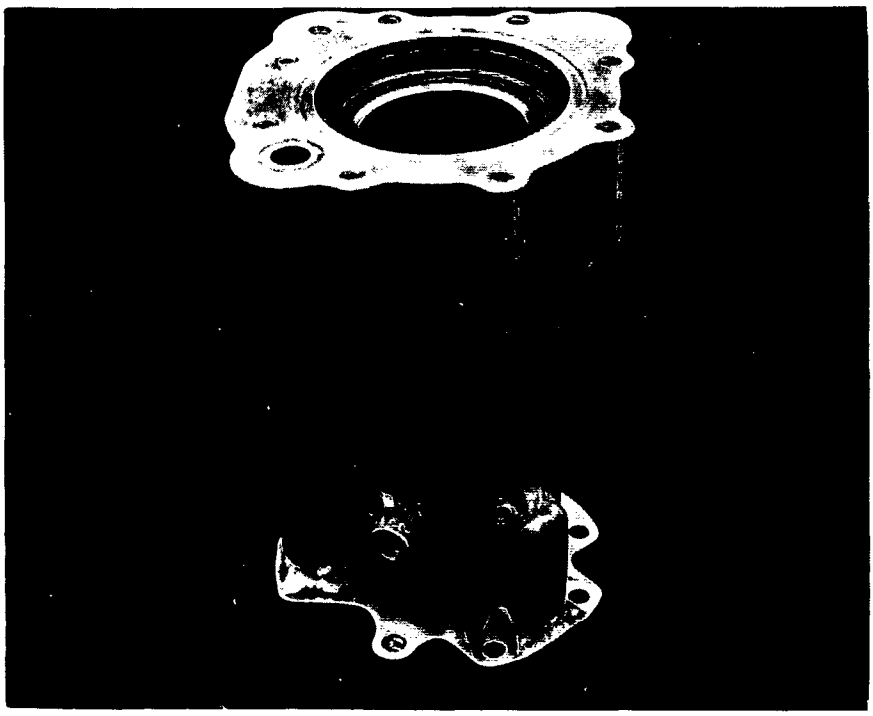

Figure 3-33. Proto 2 Compressor - Lower Cylinder Assembly

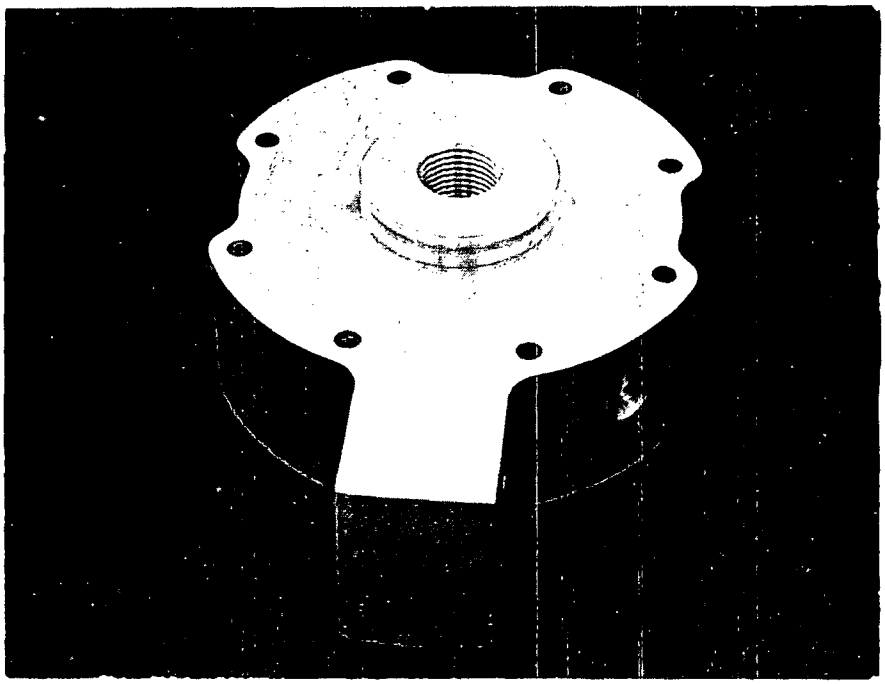

Figure 3-34. Proto 2 Compressor - Upper Head

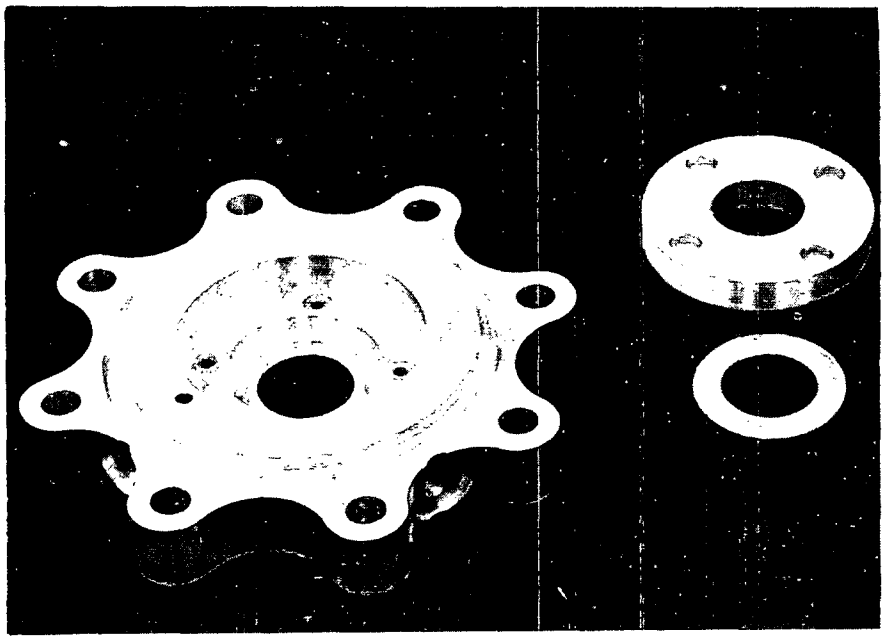

Figure 3-35. Proto 2 Compressor - Mid Housing Seal Components

Table 3-4. Proto 2 Compressor Weight Distribution

Components	Weight (LB)
Pistons: Cast Iron/Kennertium (Prime)	9.62
Bronze (Alternate)	9.62
Cylinder Housing: Engine End	4.374
Bearing End	5.324
Cylinder Head: Engine End	0.970
Bearing End	1.530
Mid-Housing Seal Assembly	0.552
Valve Assy. - 2 each required	0.560
Manifold Lines	0.779
Fittings (major) s/s 4	0.414
alum. 6	0.214
Head/Mid-Section Bolts	0.563
Upper Bearing Support	0.51
Total*	26.125 LB
Design Goal	26.0 LB

* Total also includes additional instrumentation, piping, etc.

The unsymmetrical and/or biased piston operation produces refrigerant pumping predominantly from the lower cylinder and, hence, reduces capacity. In addition, this could lead to a premature piston to mid-housing collision at the lower ambient temperature conditions since the piston stroke normally increases with falling temperatures. The principal cause of this was found to be the higher pressure drop resulting from the flow of suction gas to the lower suction manifold as compared to that occurring at the upper suction manifold. This imbalance in suction pressure levels within the cylinders produces a net force causing the

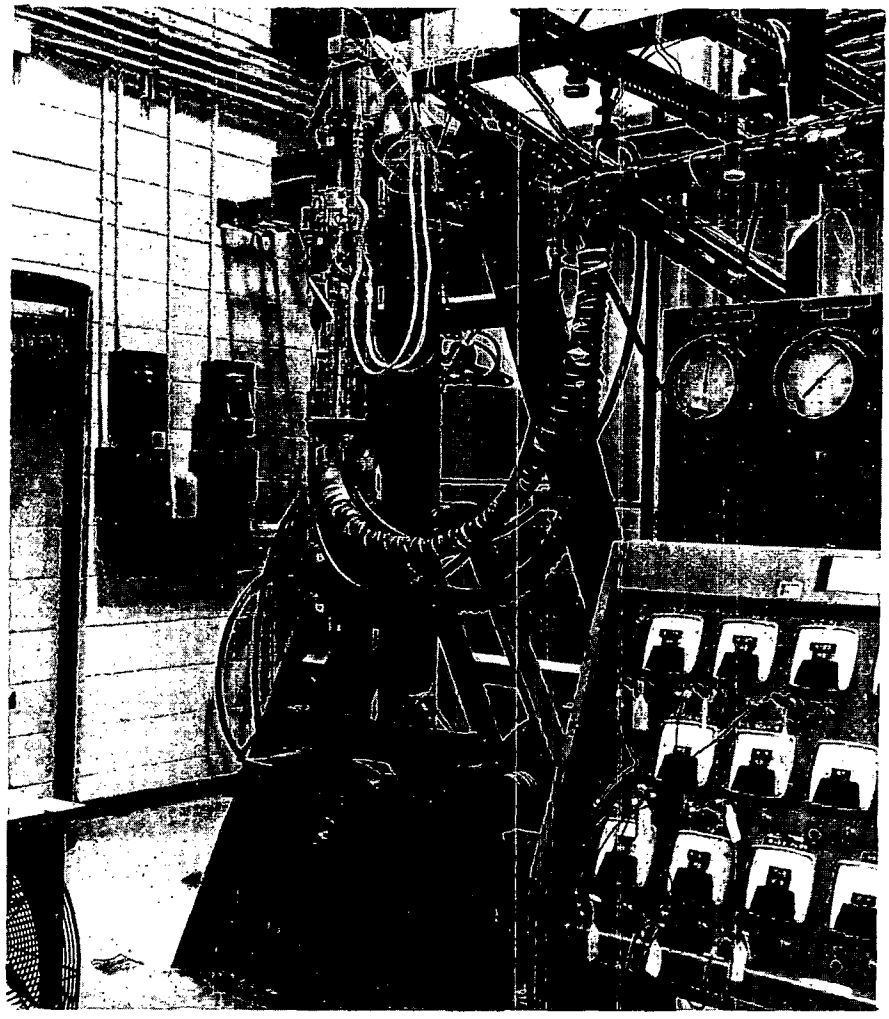

Figure 3-36. Proto 2 Compressor Assembly Mounted in Component Test Facility

piston to run off-center at a distance determined by the counter balancing forces of the gas springs. This increased pressure drop is attributed to several factors: the compressor/facility interface suction line configuration; the internal porting restrictions; and the level of suction gas superheat. Modifications are being made to alleviate the first two factors, and the higher flow rates at design conditions should reduce the latter within acceptable design limits.

Preliminary performance information was obtained at the end of the reporting period. Flow rates in excess of 280 lb/hr were measured for a nominal 85°F cooling mode operation with an

associated isentropic efficiency level calculated at 70%. Further performance evaluation will be conducted following elimination of the unsymmetrical piston operation.

Sump/Sump Heater

The need for a sump and/or sump heater in the refrigeration loop contained within the outdoor unit was reviewed during this period. A sump is normally provided in an electric heat pump system, usually in the compressor/electric motor hermetic can to act as an oil reservoir for the compressor oil pump and provide liquid flooding protection for the compressor. Since adequate oil lubrication of the crank hydrodynamic bearings must be provided during system start-up, an electric heater is provided to evaporate condensed refrigerant from the oil to minimize dilution. The same heater can also serve to evaporate any condensed liquid in the compressor cylinders prior to start-up. This protection is mandatory in an electric unit because any liquid refrigerant including liquid flooding in the suction supply from the evaporator could damage the components of a positive displacement compressor.

The linear free piston compressor is not constrained by similar operating limitations. There are no positive feed hydrodynamic journal bearings within the compressor assembly and correspondingly, no associated oil pump is required. Lubrication for the pistons and connecting rod is totally provided by the oil that is transported via the refrigerant flow. This passive lubricating system in addition to the non-positive displacement characteristics of the compressor eliminates the need for the sump electrical heater. The free piston design of the compressor, therefore, precludes potential damage due to incompressible liquids in the suction supply. Stalling of the compressor due to liquid flooding is a possibility without a sump, however, such a transient condition will not damage the compressor. In addition, the design of the suction supply lines within both the outdoor unit and the compressor manifold have been configured to reduce the possibility of such an occurrence.

3.4.4 TUBULAR SPRING COIL

Four tubular spring coils translate the refrigerant flow from the stationary manifold to the reciprocating compressor interface while permitting engine/compressor dynamic excursion. These coils are subject to fatigue loading and must provide "infinite" life, well over 10^9 cycles. A precipitation hardened stainless steel (Almar 362) was selected as the prime material with the Proto 1 material - PH15-7 Mo (welded tube geometry), to serve as backup. This selection was made for several reasons. The Almar 362 tubing is seamless, requires fewer manufacturing steps during processing, and has lower notch sensitivity than the PH15-7 Mo. Fatigue testing of coils was conducted during the last period to verify the selected design - both material and tube geometry. Two tubes failed during testing due to reasons presented below, with the third meeting the 2000 hour design verification goal.

Tube No. 1

The first tubular spring coil on endurance test accumulated 667 hours of operation when a failure occurred. This corresponds to 7.1×10^7 cycles of alternating stress, well past the leveling out portion of the S-N fatigue endurance diagram for the AM-362 material (Figure 3-37). The failure was a circumferential crack in the tube on the straight length adjacent to the upper clamp bracket. The tube appeared to have been worn and chemically attacked at the aluminum clamp interface. The clamp was slightly extruded at the edges by the motion of the tube and at one point, the material had flaked off. A failure analysis was conducted and identified several contributing factors which led to excessive local loading of the tubing wall in the region of the top holding clamp. The clamping configuration and resulting tube loading, materials, oil contamination, finish and clamp edges are believed to have contributed to the failure. Changes were made to the clamping hardware to alleviate these factors and testing begun on a second tubular spring coil. Similar modifications were made to the prime compressor hardware to avoid such an occurrence.

Tube No. 2

This second tube failed after only 1.3 hours of operation, corresponding to 1.4×10^5 cycles (see Figure 3-37). A longitudinal crack developed on the inside of the upper 1.5 inch radius

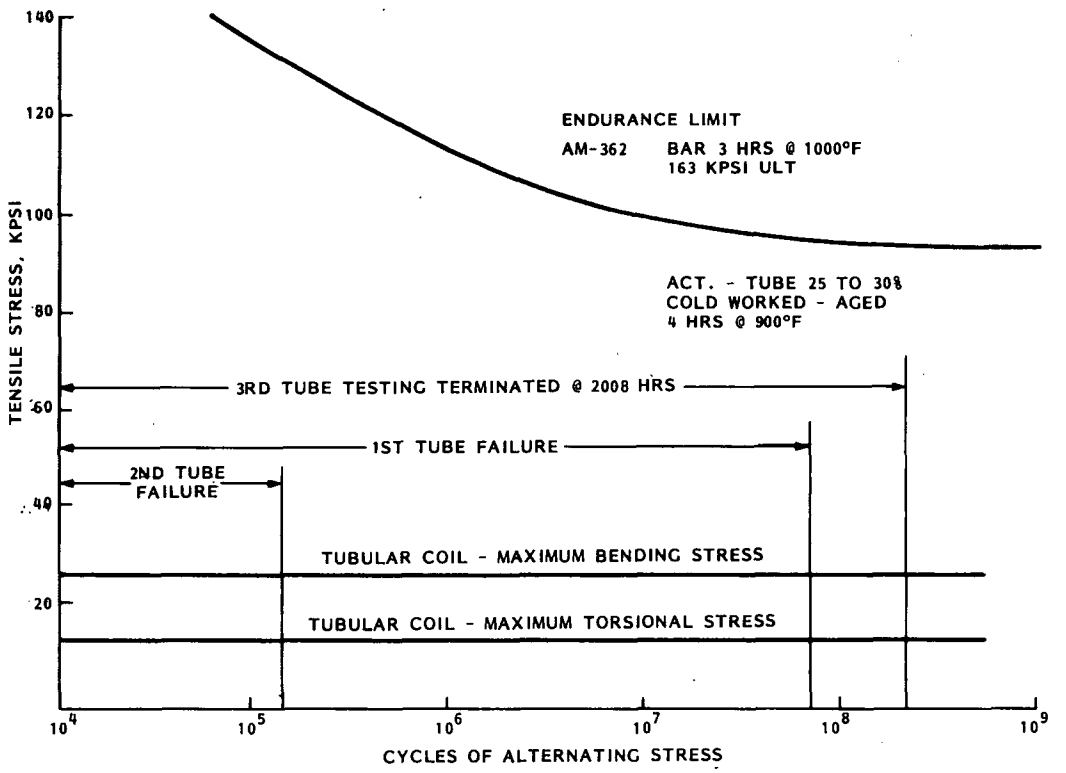

Figure 3-37. Fatigue/Endurance Data AM-362 Material

transition bend from the coil to the axial straight section at the clamps. This is not in the region of highest stress and an investigation attributed the failure to defects in the prime tube. Discussions with the tube supplier uncovered several desirable changes to the fabrication process, such as additional surface finish preparation prior to the final drawing process. This should reduce surface defects and, thereby, increase tube reliability. A third tube was installed on the test stand subsequent to polishing the surfaces in the highest stress areas and inspecting to insure freedom from any visual surface imperfections.

Tube No. 3

Testing of the third Almar 362 material tubular spring coil was terminated after successfully completing the scheduled 2000 hours of evaluation. A total time of 2008 hours were logged at a stroke of 1.75 inches and an operating frequency of 30 Hz. This corresponds to over 2.15×10^8 cycles of alternating stress which is well past the knee of the curve where the material strength stabilizes.

Currently the plans are to remove the coil from the stand and inspect for dimensional changes. Strain gauges will then be mounted and test condition stress levels will be measured. This latter effort will be scheduled early next year.

All inhouse tubular spring coils will be processed through the surface preparation and inspection procedures. The material specification for any subsequent tube purchases was ammended to have these procedures incorporated by the tubing manufacturers.

3.4.5 COMPRESSOR REGULATOR

The compressor pressure regulator valve is an absolute regulator concept and was designed to provide a preset gas pressure to the compressor gas springs. This constant reference pressure minimizes the effects of varying refrigerant conditions due to ambient environmental changes and matches the compressor to the engine. A specification for an adjustable regulator covering the range of 50 to 120 psia was prepared and responses solicited from several qualified vendors. Three different valve designs were selected for evaluation and are all in different phases of the procurement cycle.

Regulator Valves

The "prime" regulator, utilizing a sealed bellows concept is being supplied by Carleton Controls Corporation, a custom valve manufacturer. Fabrication completion and delivery is scheduled for late January of 1980.

Ausco, another custom house, was contracted on an incremental basis to provide a second regulator valve as an alternate or backup. Their design also utilizes a sealed bellows concept and a check point design review is scheduled for January 1980.

The third valve being procured is a standard refrigerant, constant pressure control valve manufactured by the Singer Corporation. This valve, although not specifically designed for the compressor operating environment, offers several features beneficial to mass production and cost effectiveness, most notable being use of a flexible diaphram rather than a sealed

bellows. Sample valves for evaluation were overdue and delivery was being expedited at the close of this reporting period.

Compressor Simulation

Compressor computer code modifications have been initiated to improve refrigerant flow and power predictions. Empirical correlations obtained from previous hardware will be replaced by a more elemental model. The new model will facilitate correlation with new compressor test data, including the new piston motion measurements. Frequency response of the compressor is critical to overall system performance and data obtained with the Proto 1 hardware was lower in frequency than the Proto 2 design frequency. The new code was being debugged and matched to compressor test results by the end of this reporting period. Once validation is completed, it will enhance overall analysis of compressor operation while permitting a more detailed analysis of compressor/engine matching via regulated pressure adjustment or other changes.

3.4.6 PLANNED ACTIVITY FOR NEXT PERIOD

Compressor component testing will continue into January 1980 to resolve the functional operation problems. Performance testing will then be performed to map the unit prior to mating the compressor with the free piston Stirling engine for integrated testing.

The second compressor unit will then be assembled and component testing continued. The new compressor test facility which will provide both design stroke and frequency will be fabricated and installed during this interim period. Complete performance testing and testing of alternate components, i.e. bronze pistons, alternate suction valves, and alternate piston rings can then be conducted.

3.5 CONTROLS

3.5.1 SUMMARY

The controls for the first Proto 2 unit were fabricated and assembled during this reporting period. Testing of this unit was just beginning at the end of the year.

3.5.2 DESIGN

The major portion of the design effort was accomplished during the first half of the year. Drawings for the interface panel and field wiring box were issued during this reporting period. The display and control panel for the instrumentation rack for the Field Evaluation Test unit was designed and a schematic diagram was generated.

3.5.3 FABRICATION

The wire wrapping of the controls circuit board had begun during the first half of the year. Once completed, the components were subsequently installed and functional testing was successfully completed after some minor corrections were implemented. The power supply board, the defrost signal conditioner board and the display board were fabricated and tested with no problems.

The controls were designed to be mounted on the orifice mounting plate for the outdoor fan. This panel was manufactured as a standard component by the GE Air Conditioning Business Division, Tyler, TX. This panel was modified to add a doubler plate, and mounting holes were drilled for the controls components. When this work was completed, mounting and wiring of the components was accomplished. Brackets were used to install the panel connectors and to mount relays. A test box was fabricated which allowed the controls on the orifice panel assembly to be tested as a unit.

The orifice panel assembly was then installed in the outdoor unit and the wiring of the controls external to the panel was completed. After initial checkout, the controls were ready for the air handler component test which began at the close of the year.

3.5.4 PLANNED ACTIVITY FOR NEXT PERIOD

Air Handler component testing will provide the vehicle for the controls to be operated and tested. In addition to verifying the functional operation, parasitic power levels will be measured for the controls and the major system components.

The fabrication process which was just completed for the first Proto 2 unit will be repeated for the second unit that is scheduled to be installed as a field test unit.

A display and control panel will also be fabricated for the field test unit. This panel will be integrated with the instrumentation and data logging equipment and will meet the integrated system requirements for proper field test unit operation.

3.6 AIR HANDLERS

3.6.1 SUMMARY

The product development heading "Air Handlers" encompassed three distinct elements which include:

1. The Indoor Unit
2. The Outdoor Unit
3. The Outdoor Unit Cabinet

During this reporting period the major effort was devoted to modifying the Indoor Unit and fabricating the Outdoor Unit. The Indoor Unit is a standard product manufactured by General Electric Co. - Central Air Conditioning Dept. (GE-CAC), Trenton, NJ, for residential use. This unit was modified to meet specific HAHP needs. The Outdoor Unit was assembled from components that were designed during the previous reporting period. In addition, a large portion of the components for both the hydronics and refrigeration circuits were specified and purchased from commercial sources during the previous report period.

The design phase of all Air Handler subsystems/elements including instrumentation requirements was finalized during this reporting period. The design considerations and details were discussed in the previous semi-annual report.

3.6.2 DESIGN

Outdoor Unit

The complete detailed design of the Outdoor Unit, including the refrigerant and hydronic piping systems as well as appropriate instrumentation, has been completed. The final piping design is depicted in Figure 3-38. The Outdoor Unit contains refrigerant and hydronic loops, their attendant heat transfer coils and the valving circuits necessary to operate the completed subsystems in both heating and cooling modes. The proven design practices employed in the commercially available heat pumps made by GE-CAC, Tyler, Texas have been utilized wherever applicable, including the use of GE spine fin heat transfer coils. Other standard refrigeration parts used include the 4-way valve, expansion valve, fan and motor assembly, pressure limiting controls and defrost controls. Many standard hydronic components/controls were also used including a 3-way valve, which directs the waste heat from the Stirling engine either indoors during the heating season or outdoors when operating in the cooling mode.

Outdoor Unit Cabinet

The design of the Outdoor Unit Cabinet has been completed to HAHP specifications by the General Electric Co. - Industrial Design Operation, (GE-IDO) in Louisville, KY. This has produced an esthetically pleasing and geometrically balanced design appropriate for a residential product. In addition to esthetics, the cabinet is also designed to provide excellent serviceability, efficient air circulation, good sound control, long term structural integrity, a weather tight controls compartment and a weather shielded engine compartment (Figure 3-42).

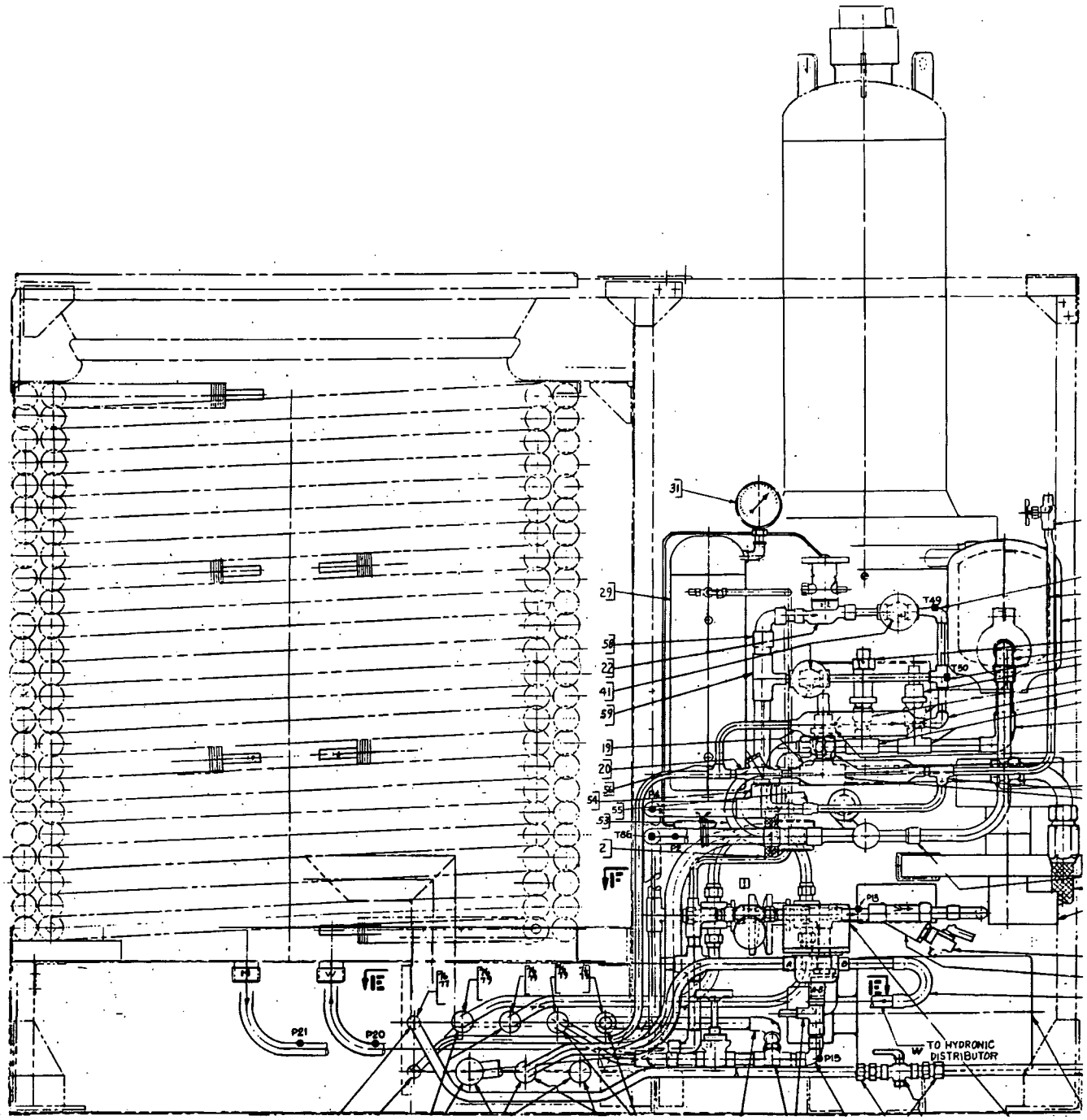

Figure 3-38. Outdoor Unit Piping Assembly

3.6.3 UNIT FABRICATION AND ASSEMBLY

Indoor Unit

The indoor unit is primarily a purchased item and no fabrication was required. The unit is made up of a commercially available, high efficiency, 3 ton Air Handler manufactured by GE-CAC, Trenton, NJ, as model BWE936C100A0. The modifications necessary to adapt the unit to HAHP needs have been completed. These modifications consisted of changing the refrigerant controls, adding a standard hydronic coil to the upper portion of the cabinet and adding the necessary diagnostic and performance instrumentation to the refrigerant and hydronic loops. The amount of effort required to complete this task was relatively small because there was a fairly close match between the commercially available unit and HAHP requirements.

Outdoor Unit

This unit was fabricated to meet HAHP specifications. The frame consists of structural steel shapes, (i.e., angles, tubing, etc.) welded together except for specific bolted elements required for assembly and/or maintenance requirements. Sheet metal was used to form the base of the coil and engine compartments as well as the bulkhead between the coil and engine compartments.

After delivery of the frame shown as Figure 3-39 it was given a multilayer weather protective finish. Following this, the refrigerant and hydronic loop components were installed in the engine compartment. Figure 3-40 shows a close-up view of this area.

The next assembly stage involved the installation of the refrigerant and hydronic spine fin coils. These coils are nested one inside the other (hydronic coil inside) to provide a compact assembly allowing full heat exchange with a single pass of air. Subsequent assembly operations involved the installation of pressure taps, immersion and surface thermocouples, fan orifice base plate including control circuits and associated weather panels. Figure 3-41 shows the unit at this stage of assembly. Note the refrigerant and hydronic interface fittings

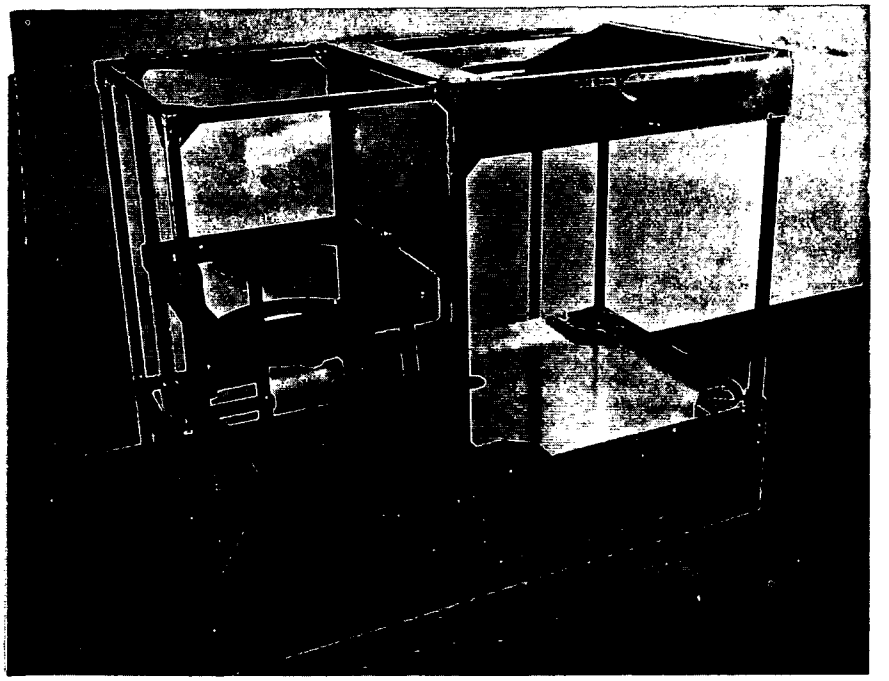

Figure 3-39. Outdoor Unit Frame in As-Built Condition

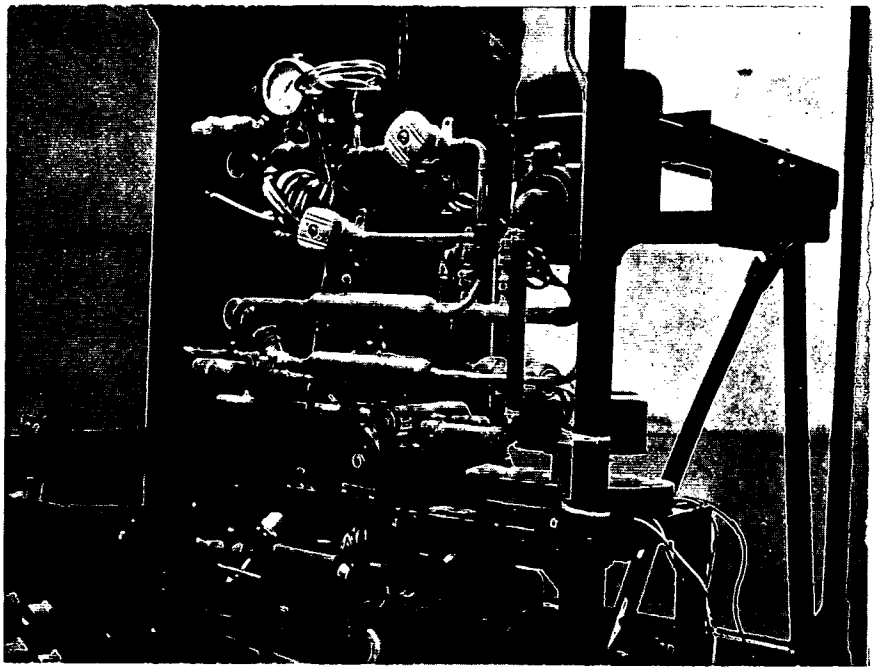

Figure 3-40. Close-Up of Engine Compartment Showing Refrigerant and Hydronic Circuits

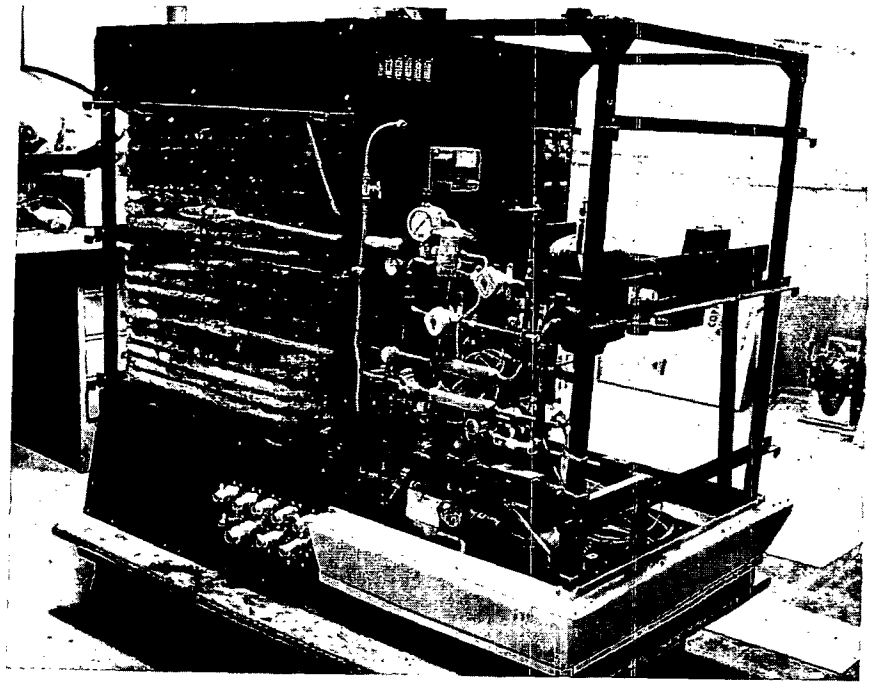

Figure 3-41. Outdoor Unit Approaching Fully Assembled Stage

that emerge at the bottom of the assembly. At this point, similar electrical and instrumentation interfaces were not as yet completed. The final assembly stage of the Outdoor Unit consisted of installing the fan and motor assembly over the coil compartment and wiring the electric components and controls.

Outdoor Unit Cabinet

A complete set of outdoor unit cabinet parts shown in Figure 3-42 was fabricated of KYDEX 100 plastic by GE-IDO. The fabrication details of the louvered panels had to be revised during the fabrication cycle because of process limitations related to vacuum forming. Initially it was intended to vacuum form an integral louver section and surrounding panel. However, in practice, excessive material thinning occurred in the deep drawn louvers and an alternate approach was adopted. The successful alternate fabrication technique utilized was to individually form the louver elements and join them to the panel by a standard plastic "welding" technique. This change added significantly to the prototype cost of the 3 louver panels

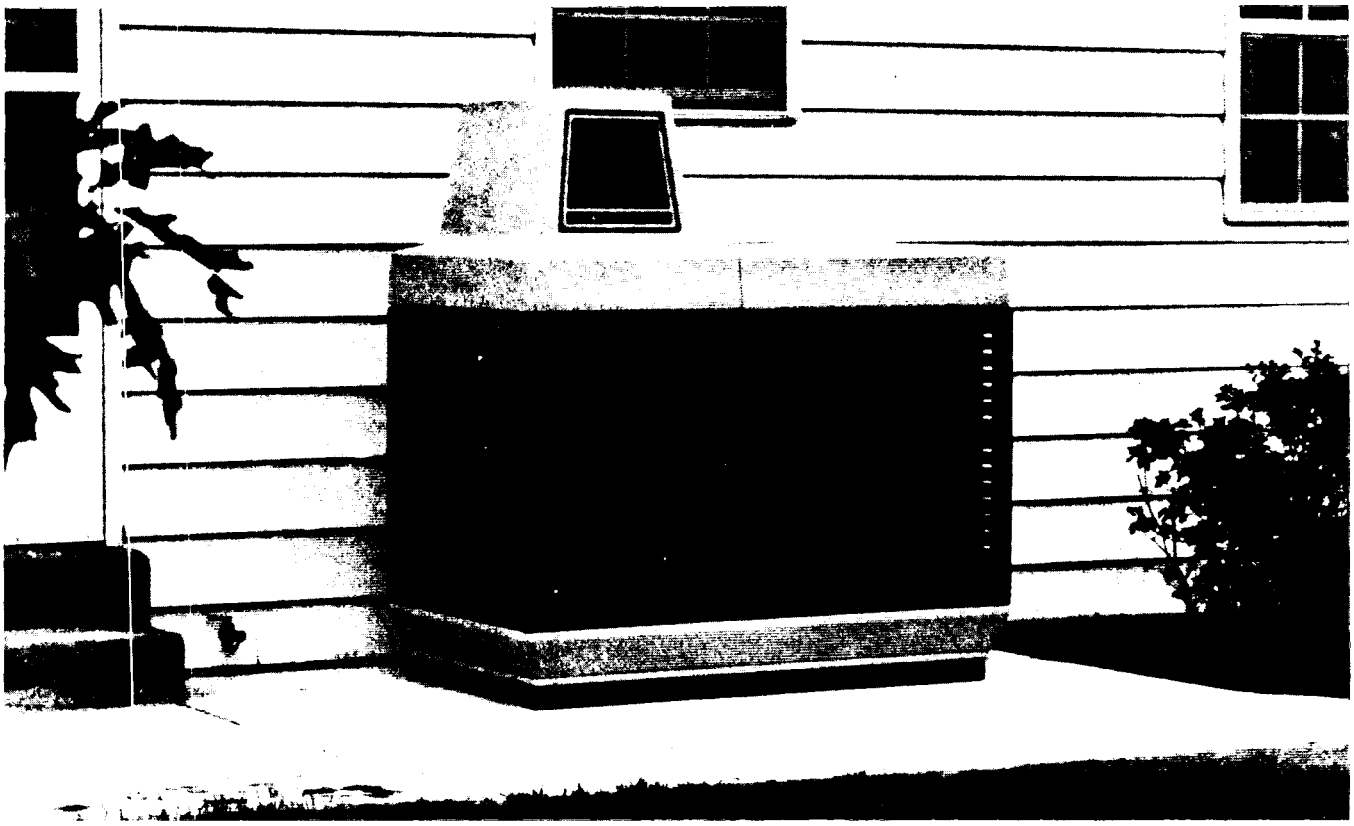

Figure 3-42. Outdoor Unit Cabinet

and alternative production techniques were therefore evaluated. In the future, cabinet parts of identical configuration, detail and quality could be economically produced in small (10) or large (50,000) volume quantities by Reaction Injection Molding (RIM) of a commercially available, fast reacting epoxy.

3.6.4 TEST PREPARATION

To prepare for the next planned phase of work, the fully assembled Outdoor Unit was moved into the controlled ambient room in which outdoor conditions for both summer and winter can be simulated. Correspondingly, the Indoor Unit was installed in a duct loop that was designed to simulate conditions inside a typical residence. A reference calibrated electric compressor made by GE-CAC was connected to the Outdoor Unit for use in component testing the Air Handler subsystem. Also, a separate Weil-McLain gas fired boiler was connected to the hydronic loop to simulate the engine waste heat load in the absence of the Stirling engine. The completed test set-up was prepared for test through a standard leak check/evacuation/charge/

leak check procedure for both the refrigerant and hydronic circuits. A complete functional checkout was made of the test facility and all the control elements in the Air Handers. An initial charge optimization test conducted in the heating mode rounded out the Air Handler activity for this report period.

3.6.5 PLANNED ACTIVITY FOR NEXT PERIOD

During the next reporting period, all Air Handler performance mapping tests and a complete set of optimization tests will be conducted. The assembly of a second set of Air Handlers for the Field Evaluation Test will also take place.

SECTION 4

INTEGRATED TEST

SECTION 4

INTEGRATED TEST

4.1 INTRODUCTION

The Integrated Test Stand is a facility for testing the integrated Proto 2 Engine/Combustor/Compressor Assembly under a wide variety of operating conditions. While the stand is basically a highly instrumented refrigerant "heat pump" loop, a high degree of flexibility is provided for setting the following test parameters both within and beyond their design operating values:

1. Compressor suction and discharge conditions. (Refrigerant-to-water heat exchangers are provided to facilitate adjusting these parameters and for calculating heat loads in both heating and cooling modes of operation.)

2. Combustor firing rates and percentage of excess air conditions.

3. Engine coolant flow rates and fluid inlet temperature levels.

The test hardware is also readily accessible for any desired modifications/adjustments.

4.2 TEST PLAN

An Integrated Test Plan was completed and issued during this reporting period, in preparation for the forthcoming integrated test effort. This test plan, a summary of which is included in Appendix B, presents the objectives of the integrated test effort, identifies the equipment to be tested, test parameters, test facilities, instrumentation, and established safety procedures to be exercised.

4.3 ENGINE INSTALLATION

The first Proto 2 Engine and Combustor Assemblies were installed in the Integrated Test Stand during the latter portion of this reporting period. The tubular refrigerant coils were also fitted and heat-treated in preparation for interconnecting the engine's interface assembly and the linear compressor assembly.

Engine instrumentation wire harnesses have been completed, with the exception of the leads directly interfacing with the compressor assembly. The compressor is presently scheduled for installation early in January, 1980. Current installation efforts are concentrated on completing the engine to facility interface.

4.4 PLANNED ACTIVITY FOR NEXT PERIOD

The planned effort for the next reporting period includes completion of the engine-test facility connections and installation of the compressor and its instrumentation wiring. The integrated test effort will be initiated upon completion of these tasks, and will be conducted in accordance with the test plan. The performance characteristics of the combined combustor, engine and compressor package will be verified and evaluated by this testing work prior to full HAHP system testing. Integrated test activity is scheduled for completion during the next reporting period.

SECTION 5

TEST FACILITY UPGRADING

SECTION 5
TEST FACILITY UPGRADING

5.1 INTRODUCTION

Additional test facility modifications have been completed to accomodate changes dictated by configuration differences between Proto 1 and Proto 2 assemblies, to provide more flexibility in setting test point conditions, and to update data recording equipment and methods to improve accuracy and efficiency. The following paragraphs describe the modifications completed on the compressor and integrated test stand and systems test facility.

5.2 COMPRESSOR TEST STAND

Several modifications were initiated for the compressor test stand to increase the number of dynamic pressure measurement points, to improve data accuracy, and to make temperature read-out instrumentation compatible with the integrated test stand and the systems test facility.

Test Stand Modifications

1. New thermocouples, thermocouple lead wire and connectors and a new digital thermocouple indicator were installed to change the thermocouples from type K to type J.

2. New LVDT's to measure compressor/piston stroke were ordered.

3. Five channels of strain gage signal conditioners were ordered and installed to improve pressure measurement accuracy.

4. Fabrication of the re-designed compressor drive mechanism was completed and the equipment was received ready for installation.

5.3 INTEGRATED TEST STAND

Several modifications were made to the integrated test stand to add data not previously available, to improve data accuracy, and to reduce data recording time. In addition, instrumentation circuits were added to perform real time data processing to partially automate data analysis. Capability was also added for engine/compressor start-up with controlled condenser and evaporator temperatures.

Test Stand Modifications

1. Received and installed four replacement 500 psia pressure transducers for use on compressor with soldered rather than potted connectors to withstand the projected 1200 psi He pressure in the bounce space.

2. Received and installed two new ± 500 psia differential pressure transducers per engine to measure the displacer gas spring and the second gas spring relative to the bounce space pressure reference.

3. Received and installed one new ± 500 psia differential pressure transducer per engine to replace the 0-2000 psig transducer previously used to measure the cold working space pressure.

4. Received and installed two new ± 0.75 in. range LVDT's per engine to measure both displacer and power piston strokes.

5. Received and installed one new ± 0.2 in. range LVDT per engine to measure engine housing motion with respect to the stand (inertial ground).

6. Received and installed one new LVDT signal conditioner and three new pressure transducer conditioners along with associated cable, connectors and pressure feed-throughs for the added instrumentation channels.

7. Received, installed and calibrated a set of signal processing modules as shown in Figure 5-1 to provide real time output of the following signals:

   a. Power piston (compressor cylinder) displacement with respect to inertial ground (Dynamic signal L-4).

   b. Displacer motion with respect to the engine housing (Dynamic signal L-5).

   c. Power piston stroke (peak to peak) with respect to inertial space (DC signal L-6).

8. Received and installed controllers and heaters for the water/glycol supply for the heat exchanger loops that provide the condenser heat sink and evaporator heat source for the R-22 compressor. This allows engine start-up at controlled condenser and evaporator temperatures.

9. Calibrated individual thermocouples used to measure the water/glycol mixture ΔT across the heat exchangers. This has improved the accuracy of the calculated heat loss or gain in the evaporator and condenser.

10. Replaced digital temperature indicators and selector switches with a 100 channel data logger. This has substantially reduced run time required to record a set of data and also improved temperature resolution from $\pm$ 1.0°F to $\pm$ 0.1°F with a subsequent improvement in data accuracy for the R-22 flow, operating frequency and displacer peak/peak signals that are also being recorded.

11. Implemented time-share use of a Hewlett Packard model 5451B Fourier Analyzer System for calculations of engine horsepower, displacer to power piston phase angles and amplitude ratios.

5.4 SYSTEM TEST FACILITY

Several modifications were initiated and/or completed for the system test facility to add data not previously available, to improve data accuracy and to reduce data recording time. In addition, instrumentation circuits to perform real time data processing were added along with provisions to partially automate data analysis.

System Test Facility Modifications

1. Received new sensors identical to those defined in Paragraph 3.3.1 (Items 1. through 6.) for the Integrated Test Stand.

2. Installed thermocouple wire, connectors, and thermocouple terminal boards to increase type K data channels by 12 and type J data channels by 24.

3. Replaced existing 100 channel data logger which has a resolution of 1°F with a later model 120 channel data logger with a resolution of 0.1°F. This has increased recorder accuracy and reliability.

4. The combustor exhaust system was re-configured to decouple combustor back pressure from wind fluctuations.

5. Relocated air handler inlet and outlet dry bulb and wet bulb sensors to positions immediately adjacent to the rakes to eliminate possible errors. In addition, the yellow-back thermometers were replaced with calibrated platinum RTD's for readout on the new data logger system. This has eliminated the necessity for manual recording of these parameters.

6. Ordered and installed a complete new set of signal conditioners for engine/compressor sensors consisting of three channels of LVDT conditioners, one frequency to voltage conversion channel for the R-22 flow meter, and 8 channels of strain gage conditioners.

7. Ordered and installed a duplicate set of signal processing modules as described in Paragraph 5.3.1, Item 7, and Figure 5-1.

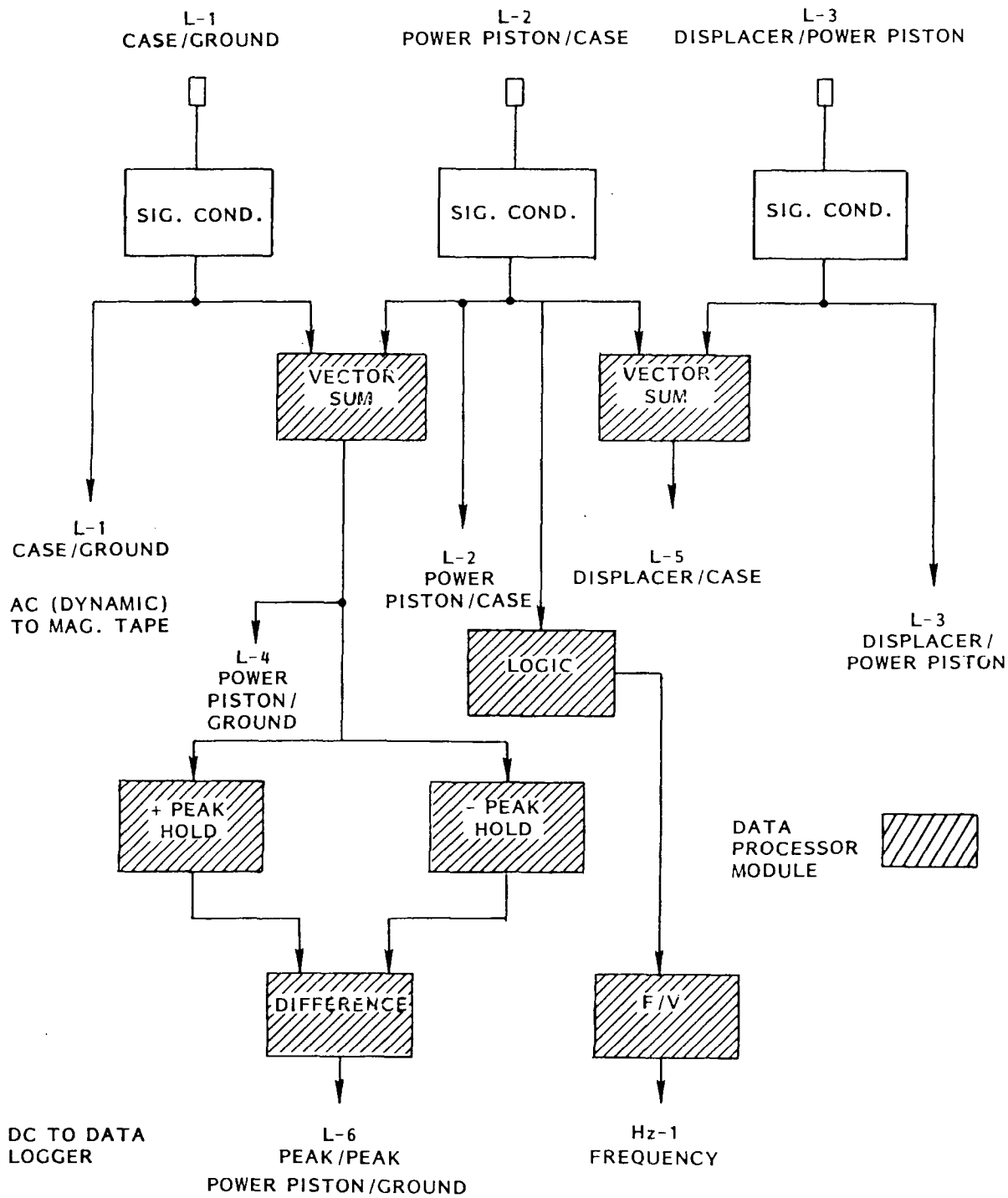

Figure 5-1. Data Processing System

5.5 PLANNED ACTIVITY FOR NEXT PERIOD

During the next reporting period, the new compressor test stand drive mechanism will be installed along with the new system test facility sensors. Calibration of new sensors in both test stands and the system facility will be completed. Results obtained with the new instrumentation will be monitored and evaluated for potential modification requirements for subsequent program phases.

SECTION 6

FIELD EVALUATION TEST

SECTION 6

FIELD EVALUATION TEST

6.1 INTRODUCTION

During the July-December 1979 reporting period the field evaluation and test activities commenced during the first half of 1979 were continued and significantly expanded. The site screening effort was completed and a residential test site selected following evaluation of the key characteristics of twelve sites offered by participating utilities. The site selected is located in Whitpain Township northwest of Norristown, PA about ten miles from the GE Valley Forge facility. The residence is owned by a Philadelphia Electric Company (PECO) supervisor and is within the gas service area supplied by PECO. Written concurrence in the use of the selected location was provided by PECO along with agreement to provide a suitable level of support for site modification, installation and seasonal performance testing. This site will provide heating and cooling loads within the desired range which are consistent with plans to provide a challenge to the design capabilities of the HAHP. The cooperation of all the participating utilities was most helpful throughout the site selection/screening process. A joint GE-PECO on-site review established the approximate physical locations for the major system components. Site layout plans and modifications to the existing air duct system were developed accordingly. The site owner installed an outdoor mounting pad during October 1979 and PECO pre-fabricated and installed the sheet metal duct work and dampers during December 1979. The existing gas furnace was scheduled for sub-meter installation the first week of January 1980 in order to monitor the 1979-80 heating season gas and electric power consumption and provide a comparison with previous site data and subsequent HAHP performance.

GE and PECO personnel participated in several meetings which established instrumentation and sensor requirements. Specification of required parts and instruments commenced during this reporting period and instrumentation rack sketches were started. Continuation of this work is planned during the first quarter of 1980 along with procurement and delivery of installation material and instrumentation equipment.

6.2 SITE SCREENING AND EVALUATION

6.2.1 SUMMARY

The site screening activity which commenced during the previous reporting period was continued and completed during the third quarter of calendar 1979. Seven additional candidate sites were inspected and data was obtained on two others. This activity brought the total number of sites considered for use in the HAHP field evaluation to twelve. The screening process and its results are discussed in the following paragraphs.

6.2.2 SCREENING PROCEDURE

In all cases, the previously established site selection criteria were applied as a guide and sites were visited jointly by a representative from GE and the sponsoring utility. The interior and exterior of each residence were made available for inspection and the home owners were interviewed. Since the participating utilities had previously pre-screened possible sites in their service area, the general quality of the candidate sites was high. Notes and data were collected along with photos, wherever available, in order to simplify subsequent evaluation and management review activity. The site selection criteria details were presented and discussed in the January-June 1979 semi-annual report.

6.2.3 CANDIDATE TEST SITES

The twelve sites offered for consideration by the participating utilities are shown in Table 6-1. The number of sites suggested by any one utility has no special significance, in that no limit was imposed by the selection process. The cooperation received by GE in identifying possible test sites was, in all cases, excellent.

6.2.4 SITE EVALUATION

The evaluation process consisted primarily of an item by item comparison of the site details and the degree of conformity with the selection criteria. Table 6-2 presents the estimated heating and cooling loads for individual sites. Table 6-3 gives the overall summary assessment and comparison of the proposed sites versus major selection criteria categories. For the purposes of Table 6-3, the absence rather than presence of matrix symbols is an indication

Table 6-1. Candidate Sites

SITE	A	B	C	D	E	F	G	H	I	J	K	L
LOCATION	BURLING-TON, N.J.	LANSDALE, PA.	DRESHER, PA.	EWING, N.J.	STATEN I., N.Y.	STATEN I., N.Y.	STATEN I., N.Y.	FAIRFAX, VA.	STATEN I., N.Y.	BROOKLYN, N.Y.	COLLEGE-VILLE, PA.	NORRIS-TOWN, PA.
TYPE BUILDING ①	1F/1S	1F/2S	1F/2S ③	1F/2S	2F/2S	2F/2S	1F/1S	1F/1S	1F/2S	1F/2S	1F/2S	1F/2S
UTILITY	PSE & G	PECO	PECO	PSE & G	BU	BU	BU	WGL	BU	BU	PECO	PECO
OWNER ②	CUSTOMER	EMPLOYEE	EMPLOYEE	EMPLOYEE	EMPLOYEE	CUSTOMER	CUSTOMER	EMPLOYEE	CUSTOMER	CUSTOMER	EMPLOYEE	EMPLOYEE
PRESENT HVAC	GAS/ELEC F AC	GAS/GAS F AC	GAS/ELEC F AC	GAS/ELEC F AC	GAS/ELEC F AC	GAS/ELEC F AC	GAS/ELEC F AC	GAS/ELEC F AC	GAS/ELEC F AC	GAS/ELEC F AC	GAS/ELEC F AC	GAS/ELEC F AC

KEY:

① - #FAMILIES/#STORIES

② - UTILITY CUSTOMER/UTILITY EMPLOYEE

③ - NEW CONSTRUCTION

Table 6-2. Estimated Heating and Cooling Loads

LOADS \ SITE	DESIRED RANGE (1)	A	B	C	D	E	F	G	H	I	J	K	L
HEATING													
ANNUAL LOAD, 10^6 BTU	72-107	50-53	121	111	106	56	76	92	110	51	44	66-79	79-128
DESIGN POINT LOAD (KBTUH @ 15° F)	38.5-57.5	24-27	56	50	49	34	46	56	50	31	27	42	50.4
COOLING													
ANNUAL LOAD, 10^6 BTU	27.5-41	7	30-40	27	30-36	7	27	30-36	45	30-36	30-36	14	22-32
DESIGN POINT LOAD (KBTUH @ 90° F)	29-43	8-24	30	26	(2)	8-24	31	(2)	42	(2)	(2)	15-45	25-32

KEY:

(1) - PHILADELPHIA/MIDDLE ATLANTIC REGION

(2) - DATA NOT AVAILABLE

Table 6-3. Site Comparison Summary

CRITERIA* \ SITE	A	B	C	D	E	F	G	H	I	J	K	L
REPRESENTATIVE LOCATION												
GAS AVAILABILITY			X									
UTILITY PARTICIPATION												
SITE ACCESSIBILITY											X	
BUILDING & LOAD PARAMETERS												
HEATING LOAD	L				L				L	L		
COOLING LOAD	L		L		L						L	
BLDG. SIZE												
INSULATION LEVEL								X				
OCCUPANCY PATTERN	X											
BLDG. LAYOUT & BASEMENT ACCESS						X						
OUTDOOR PAD AREA					X							
EXISTING HVAC LAYOUT		X		X			X	X				
LOCAL CODE REQUIREMENTS												

KEY: L- LOW (OUTSIDE DESIRED LOAD RANGE FOR HAHP)

X- UNFAVORABLE FOR HAHP TEST

*- ACCEPTABILITY IS INDICATED BY ABSENCE OF ANY SYMBOL ON MATRIX

of the degree of site desirability under the conditions anticipated for the HAHP field testing. A few of the special considerations within each major category are discussed in the following paragraphs.

Representative Location

All the proposed test sites met the requirements relative to location and none were excluded by this factor.

Gas Availability

Site C, which initially appeared to be very attractive, dropped out of consideration when plans to supply gas to the particular subdivision were cancelled.

Utility Participation

All the utilities contacted indicated their willingness to provide resources suitable for the testing task, and no limitations were found in this area.

Site Accessibility

Several sites were located where bringing outside visitors to see them might have presented some inconvenience. However, only one site was eliminated on the basis of access. In this case, the problem was that access by utility and GE test personnel during normal working hours could not be arranged.

Building and Load Parameters

Sites A, E, I, and J presented less than optimum estimated loads for the HAHP. The normal usage routines of the occupants were reviewed as a major factor which could override the load demands normally predictable for similar sized structures. An example of this may be found in the recent trend by some residents to sharply curtail air conditioning use as an energy-saving and economic measure. This trend and also various measures to conserve heating energy are expected to be a continuing way of life. Site C was close enough to meeting the desired cooling load range that this criteria might have been waived had gas service been available. Site K was also determined to have less than desired cooling usage, although this could have been reconsidered if access had not become a problem.

Site H had less insulation than most of the other sites considered. Although this would not have prevented loading the HAHP, it was, however, contrary to one of the initial criteria for selection. Site H also would have required somewhat more re-arrangement of the existing HVAC equipment to permit parallel operation with the HAHP. Sites B, D, and G also appeared to require more equipment rearrangement than was desirable for this specific test. Access to the basement and to the existing equipment was carefully considered for the first HAHP site because of the high probability that the traffic to and from the basement during checkout could be aggravating to the residence occupants. At Site E, the proposed outdoor unit location would have reduced the walkway area between the test site and the adjacent property. It was decided that it would be better to have somewhat more open work space for the first test unit.

Local Code Requirements

Local code requirements were not identified as limiting any of the proposed sites, however, it is expected that the HAHP installation will conform to applicable electrical, plumbing and HVAC standards. The participating utility will be expected to maintain cognizance of these requirements as the field test activity progresses.

6.3 SITE SELECTION

Based on the pre-determined selection criteria and the evaluation of the twelve candidate sites, Site L was adjudged very adequate for the intended tests, and was selected as the best overall with respect to features needed for a successful HAHP field test. It should also be noted, however, that other test sites in this group may be logical and acceptable candidates for the future, larger-scale field testing anticipated for pre-production HAHP units, Figures 6-1 and 6-2 show front (street side) and rear views of Site L.

6.4 SITE PREPARATION AND MODIFICATION

6.4.1 SUMMARY

Following selection of Site L as the field evaluation test site, PECO designated a project team to work with GE. The team includes a project engineer, a test lab supervisor and the

Figure 6-1. Field Evaluation Test Site L

Figure 6-2. Field Evaluation Test Site L

residence owner (the latter is also an Assistant Supervisor with the PECO Gas Operations Division). A member of the PECO research staff was also assigned to support the project. Initial planning meetings were held during September 1979, between this team and GE HAHP program management personnel. A general approach and timetable for site preparations were agreed upon at the time of these meetings.

6.4.2 INITIAL SITE LAYOUT

Figures 6-3 and 6-4 show the approximate overall layout of the indoor and outdoor areas of interest at the test site, including the existing furnace, air condtioner and duct systems. Figure 6-5 shows, on the same scale, the alternative locations considered for the HAHP outdoor unit. Option B was selected during a joint team visit to the site in September 1979, after considering the distances between units and the varying degrees of complexity and preparatory work required in each case. The preliminary duct interface concept agreed upon is shown in Figure 6-6. An oversize outdoor pad was agreed upon in order to provide adequate all-season working access to the outdoor unit's components.

6.4.3 SITE MODIFICATIONS

Outside Mounting Pad

The site owner installed the outdoor pad during October 1979. The pad formed a logical extension of the previously existing concrete walkway. In late October, the shell of the HAHP outdoor unit was transported to the test site and placed on the pad temporarily in order to assess the optimum positioning for both appearance and interconnection to the indoor unit. Reactions to the physical appearance of the unit were quite positive, its above average size notwithstanding. Figure 6-7 presents a photo of the outdoor unit shell in place on the pad during this activity.

Indoor Unit Air Duct Interface

At this same time, an existing indoor air handler of identical physical size to that planned for the test installation was set in place in the basement area. This unit was provided to facilitate Philadelphia Electric's efforts to modify and fit the revised air duct system to its

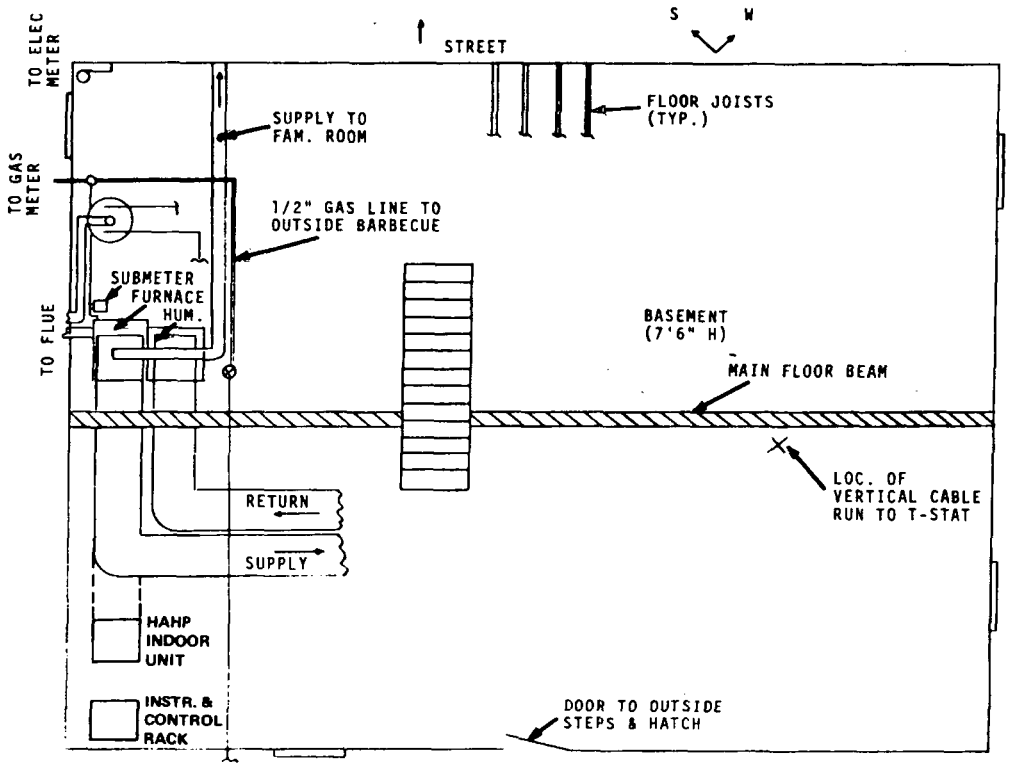

Figure 6-3. HAHP Test Site Indoor Layout

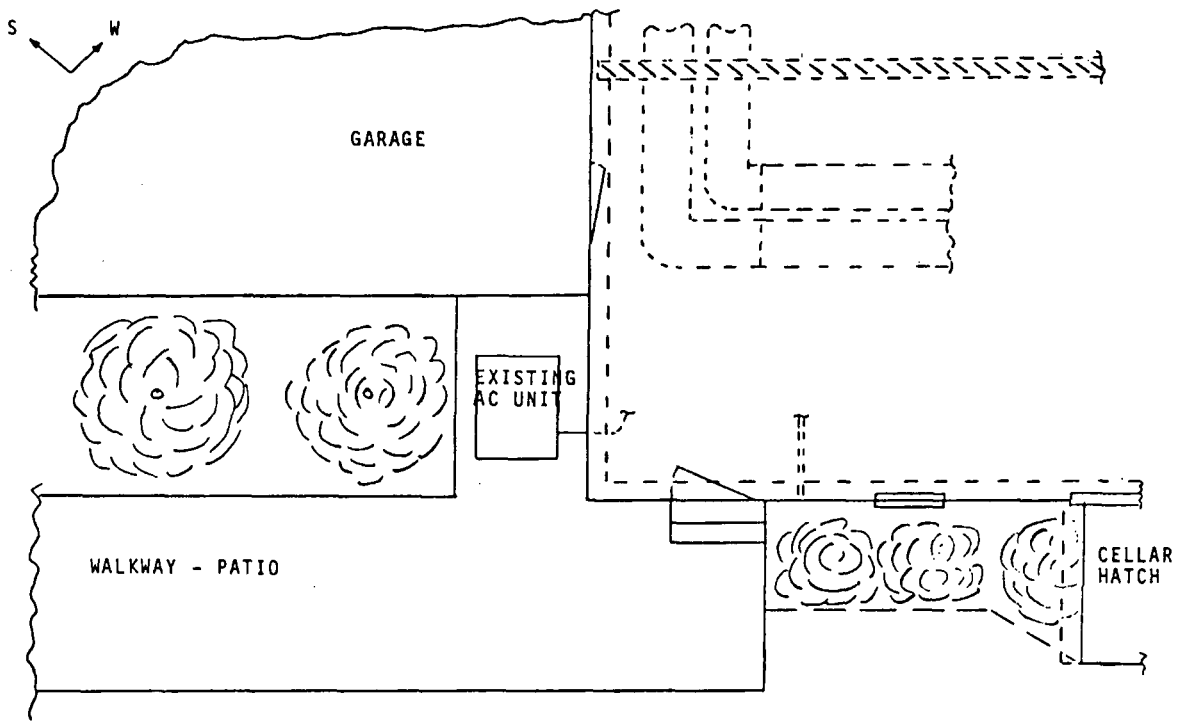

Figure 6-4. HAHP Test Site Outdoor Layout

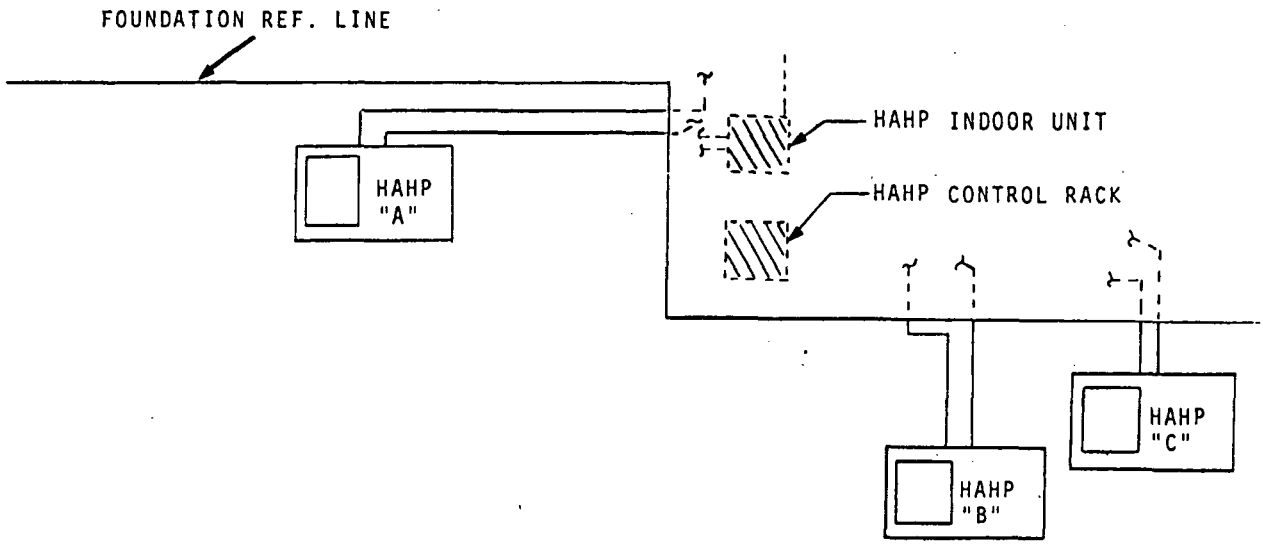

Figure 6-5. Outdoor Unit Placement Options

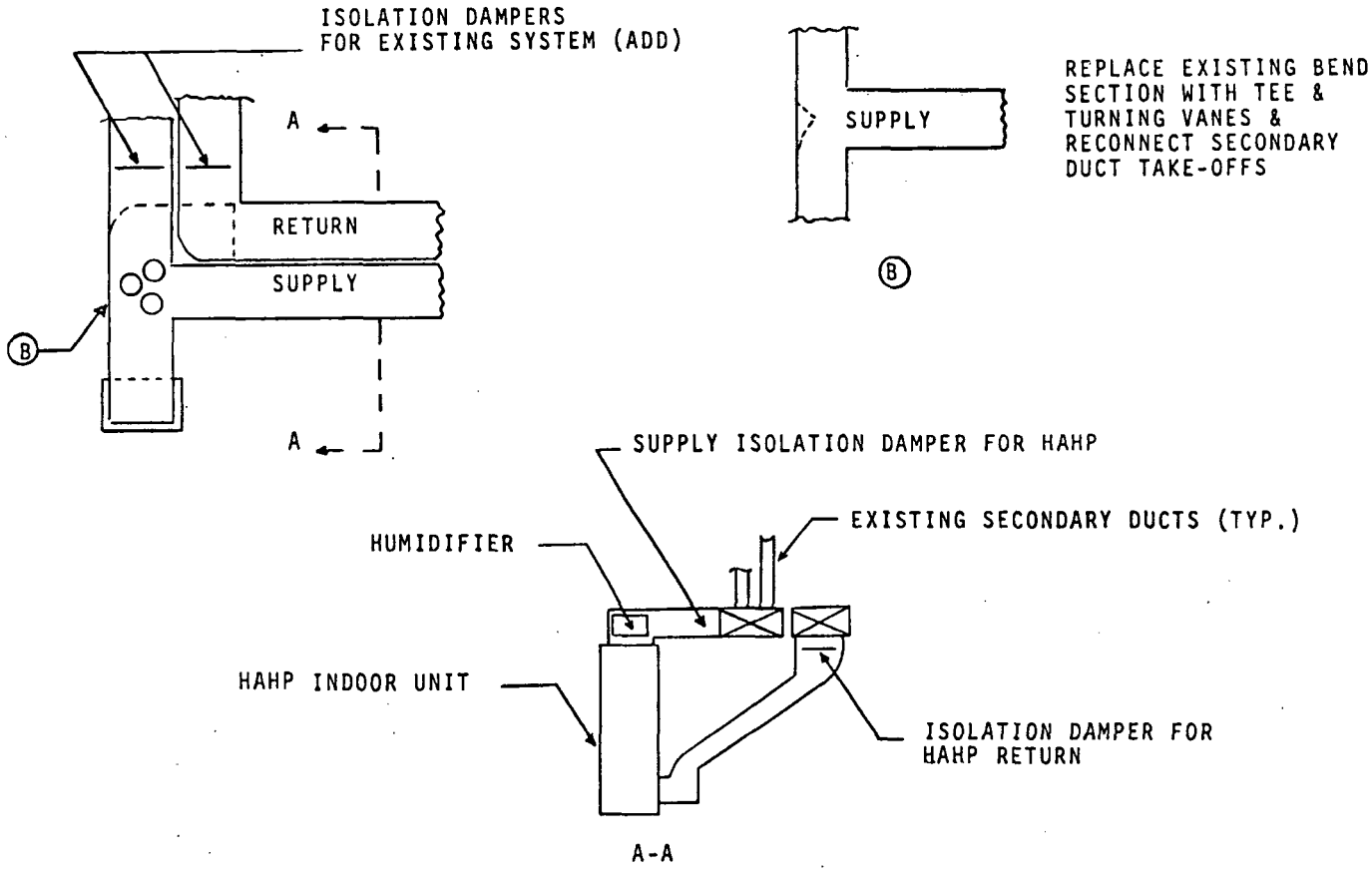

Figure 6-6. Preliminary Duct Interface Concept

Figure 6-7. HAHP Outdoor Unit Cabinet on Test Site Pad

actual required location. This air handler unit will subsequently be replaced by one with the proper internal hardware configuration for the seasonal performance tests.

Duct Modification

During November 1979, the necessary Philadelphia Electric engineering authorization was approved and PECO pre-fabricated the sheet metal parts for modifying and extending the test site air ducts. In early December, these parts were installed and the ducting re-worked at the test site. The actual on-site modifications were relatively simple and required only about sixteen hours of installation labor. With this modification work completed, a dual HAHP and existing HVAC system operation can be achieved, simply by properly positioning the isolation dampers for the system to be operated. Movable turning vanes were also incorporated in the design to assure more streamlined air flow at the supply side "T" intersection as shown in Figure 6-6. Minor relocations of three existing secondary take-off heat ducts were necessary, but amounted to only a few inches difference in the connection points from that of the original installation. One other duct was extended several feet to permit heating take-off near the HAHP transition section, properly placing this point downstream of the isolation damper. Normal operation of the existing HVAC system was restored satisfactorily following these modifications.

Gas Line and Electric Circuit Modifications

Provisions are required for extending and metering the gas supply for the HAHP and also for the several alternating current power circuits for both systems, Philadelphia Electric recommended that these additional provisions be identified, but not implemented till the HAHP is ready for installation. This was thought to be more efficient with respect to personnel utilization and could also avoid rework due to any changes prior to HAHP shipment.

6.5 INSTALLATION PLANNING AND DESIGN

6.5.1 SUMMARY

Principal activity included preparation of layout details, procurement of an auxilliary humidifier unit, and identification of installation components and requirements.

6.5.2 SITE LAYOUT REVISIONS

The primary effort during this reporting period consisted of preparing a more precise layout of the HAHP test system based on the duct modification work and measurement of applicable distances for cable and piping runs. Figure 6-8 shows the planned location of the major HAHP system components and their associated electrical and mechanical connections.

6.5.3 HUMIDIFICATION UNIT

Discussions with the site owner and Philadelphia Electric indicated that in order to provide an acceptable and approximately equal level of humidification to the test residence, the HAHP installation should include a second humidifier unit. A GE Model BGHU500A9B humidifier and a Model BHC 2700A1A humidistat were ordered accordingly.

6.5.4 OTHER COMPONENTS

Identification of the principal installation components and their interface requirements was accomplished during this reporting period. Design continued on the display and control unit and schematic and system level wiring diagrams were prepared for this unit.

6.6 INSTRUMENTATION SYSTEM DESIGN

6.6.1 SUMMARY

The principal activity during this reporting period included further definition of the test system configuration, sensor requirements and the instrumentation rack. These items are reviewed in the following paragraphs.

6.6.2 SYSTEM CONFIGURATION

Figure 6-9 shows the overall system diagram for the parallel-connected HAHP and existing HVAC systems when arranged to support the testing program. It was agreed with Philadelphia Electric that the gas and electric sub-metering for the existing gas furnace should be put in place as soon as possible in order to provide some baseline 1979-80 heating season data and also to verify that the duct modifications had not caused any significant load changes. The balance of the energy sub-metering will be installed at the time of the HAHP installation. Philadelphia Electric has the required meters in their inventory.

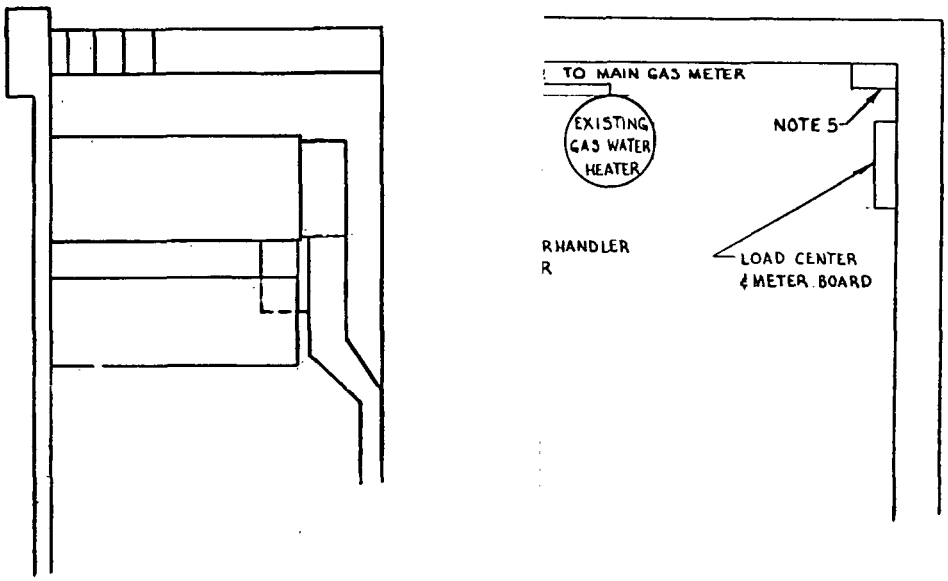

PART NO	NAME
1	HAHP O.D. UNIT
2	HAHP I.D. UNIT
3	INSTRUMENTATION RACK
4	FLOWMETER ASSEMBLY
5	HUMIDIFIER
6	THERMOSTAT CONTROL UNIT
7	HUMIDISTAT
8	HUMIDITY SENSOR
9	INTER-CONNECTION DIAGRAM
10	WALL PENETRATION
11	SYSTEM INSTRUMENTATION
12	INSTALLATION PARTS & MATERIAL
13	INSTALLATION INSTRUCTIONS

NOTES:-

1.- VERTICAL RUN TO 2ND FLOOR ~ 30.5 FT FROM SE BASEMENT WALL & ~ 13.5 FT FROM NE BASEMENT WALL.

2.- CONNECT TO NEARBY COLD WATER SUPPLY LINE & 115 V, 1 ϕ POWER PER P5 INSTALLATION INSTRUCTIONS.

3.- RUN CONDENSATE LINE TO DRAIN & CONNECT TO 230 VAC, 1 ϕ POWER PER P2 INSTALLATION INSTRUCTIONS.

4.- CONNECT TO 115VAC, 1 ϕ POWER PER P3 INSTALLATION INSTRUCTION.

5.- PECO GAS & ELECTRIC DEMAND RECORDER. SEE P11

6.- INSTRUMENTATION CABLES TO INDOOR UNIT. ROUTE OVERHEAD.

Figure 6-8. HAHP Test Site Layout

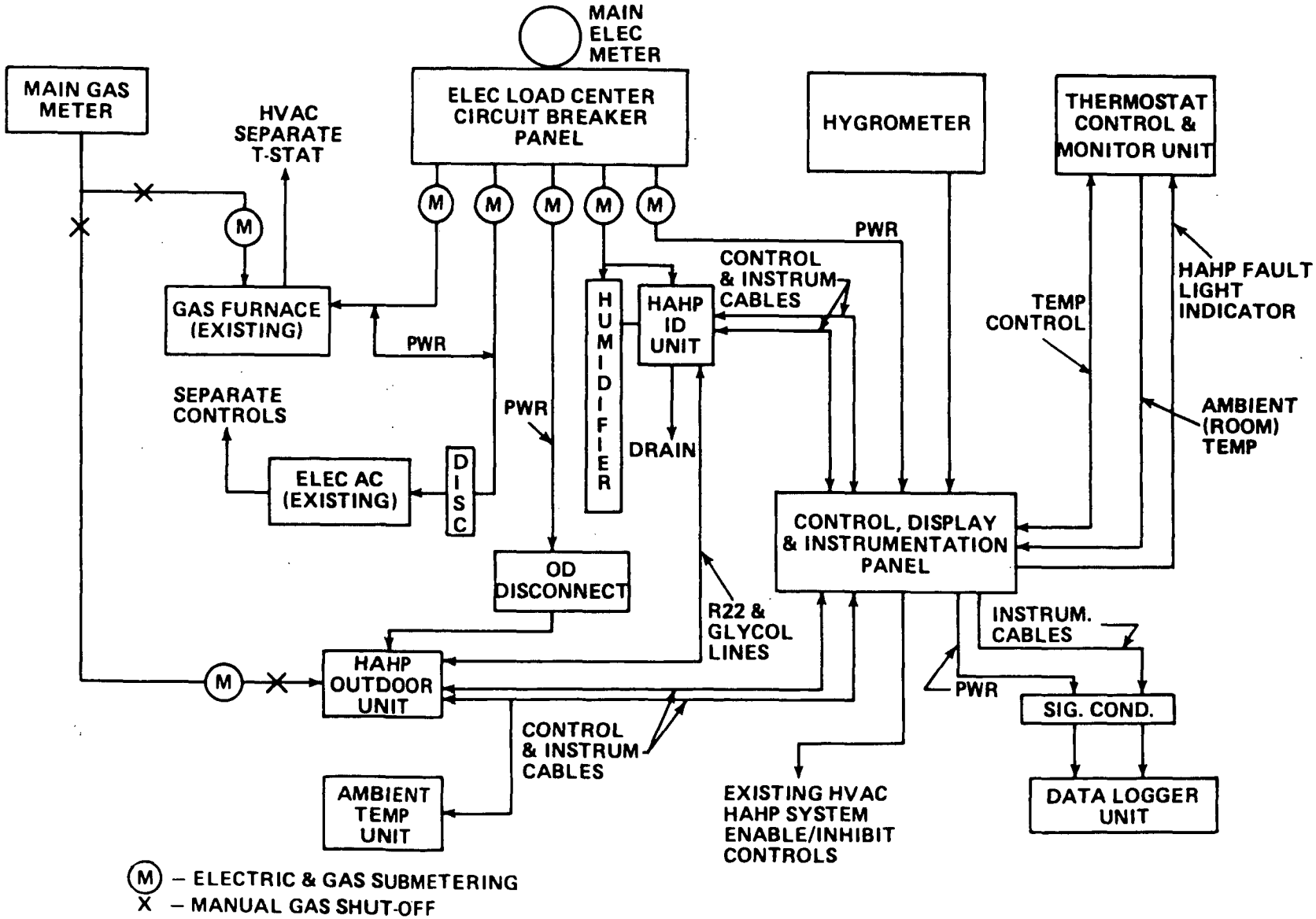

Figure 6-9. HAHP Field Test System Diagram

6.6.3 SENSOR REQUIREMENTS

A series of topical meetings by HAHP project personnel established an agreed-upon list of sensors which would provide for measurement of all required energy consumption and operating data plus a limited diagnostic capability. Figure 6-10 shows schematically where these sensors are located, and Table 6-4 identifies the function and type of sensor required.

6.6.4 INSTRUMENTATION RACK

The most flexible and least expensive way to accommodate the control and instrumentation equipment specifically required for the first field evaluation test was determined to be a standard 19 in. RETMA cabinet rack. It will provide interconnection points for both control and instrumentation wiring and mounting space for pressure transducers, control relays and circuit boards. The principal functions of the rack will also include housing of a suitable data logger and magnetic tape recorder. The cabinet rack was placed on order during November 1979 and was received in approximately three weeks. Figure 6-11 shows the planned allocation of functional space within the rack.

6.6.5 INSTRUMENTATION SELECTION

During the fourth quarter of 1979, a digital data logger specification was prepared and requests for quotations issued for the long lead instrumentation items. In addition to the data logger, quote requests were prepared for a 9-track magnetic tape recorder, humidity sensors and signal conditioning equipment. The compatibility of the magnetic tape format with the data analysis and reduction facilities at GE-Valley Forge was established and factored into the instrumentation specifications.

6.7 PLANNED ACTIVITY FOR NEXT PERIOD

Orders will be prepared early in the first quarter of 1980 for the data logger, magnetic tape recorder and other instrumentation equipment for the test site. Deliveries of this material and any special installation parts will be scheduled to support the planned HAHP availability of late March or early April 1980. At that time, PECO will complete the actual installation along with the remainder of the energy consumption sub-metering connections for both the HAHP and the conventional HVAC cooling system. As reported earlier, the sub-metering of the existing gas furnace will be completed in early January 1980.

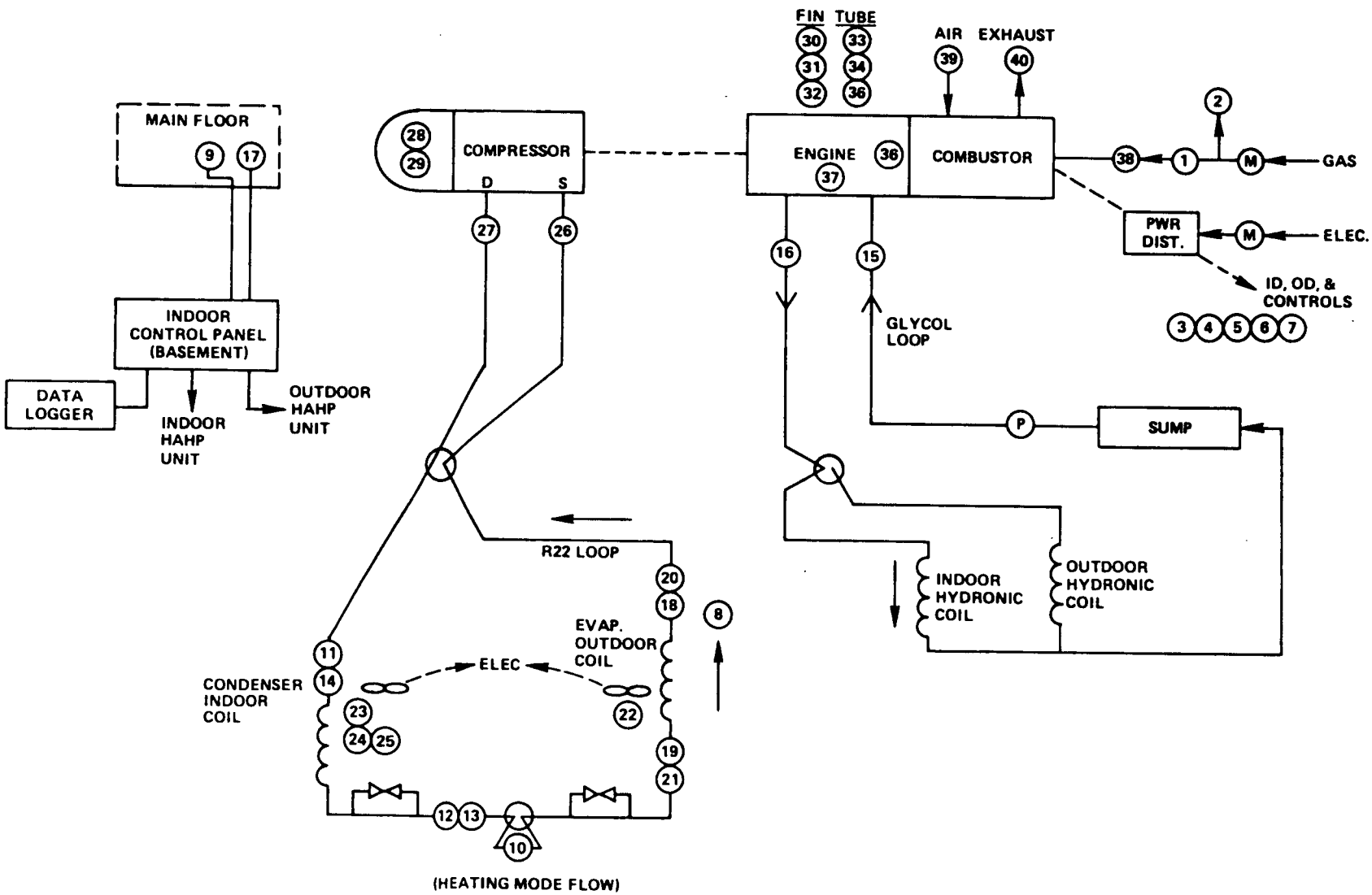

Figure 6-10. Field Test Site Sensor and Submeter Locations

Table 6-4. Sensor List for GFHP Field Evaluation Measurements

Sensor #	Function/Type/Ref #*	Sensor #	Function/Type/Ref #*
1	Gas Submeter	21	R22 Outlet Press PT P4
2	Gas Submeter	22	Exhaust Air Temp. TC/S/J
3	Electric Submeter	23	Airflow Rate
4	Electric Submeter	24	Air Temp. In TC/S/J 70
5	Electric Submeter	25	Air Temp. Out TC/S/J 72
6	Electric Submeter	26	R22 Inlet Temp. TC/I/J 52
7	Electric Submeter	27	R22 Outlet Temp. TC/I/J 82
8	Outdoor Ambient TC	28	Bounce Space Temp. TC
9	Indoor Ambient TC	29	Bounce Space Press. Gauge
10	R22 Turbine Flowmeter	30	Heater Fin. Temp. TC/S/K
11	R22 In/Out Temp. TC/I/J 46	31	Heater Fin. Temp. TC/S/K
12	R22 In/Out Temp. TC/I/J 29/48	32	Heater Fin. Temp. TC/S/K
13	R22 In/Out Press PT P6	33	Tube Temp. TC/S/K
14	R22 In/Out Press PT P10	34	Tube Temp. TC/S/K
15	Glycol Loop In/Out Temp. TC/S 53	35	Tube Temp. TC/S/K
		36	Hot Wall Temp. TC/S/J
16	Glycol Loop In/Out Temp. TC/S 62	37	Cold Wall Temp. TC/S/J
		38	Input Gas Line Press. Gauge
17	Hygrometer/Manual Readout	39	Intake Air Flow
18	R22 Outlet Temp. TC/I/J 86	40	Exhaust Air Temp.
19	R22 Outlet Temp. TC/S/J 21		
20	R22 Outlet Press PT P2		

* Ref. Dwg. #184C8261

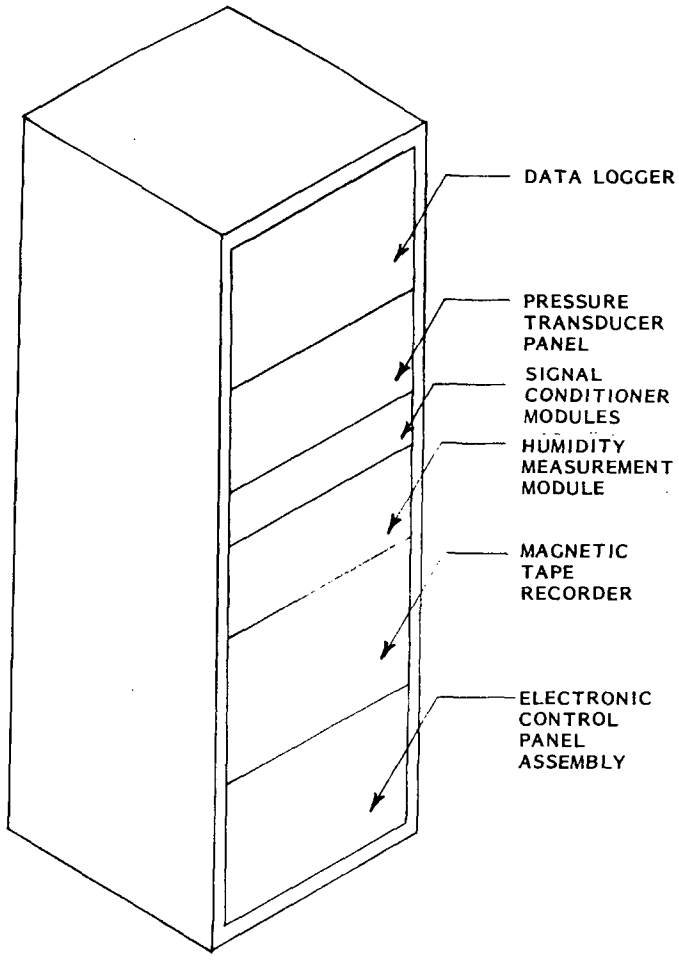

Figure 6-11. Instrumentation Rack

APPENDIX A

SEAL DEVELOPMENT PLAN FOR PROTO 2 STIRLING ENGINE

APPENDIX A

SEAL DEVELOPMENT, FREE PISTON STIRLING ENGINE (FPSE), PROTO 2

A.1 BACKGROUND

Engine tests performed to date indicate that the quality of seals and their interfacing liners require upgrading to improve engine efficiency and life. The sealing materials function at temperatures ranging between 100°F and 250°F while reciprocating at 30 Hz (1.3 in. to 1.7 in. peak to peak stroke) under loads varying between 1/2 psi to 125 psi. The atmosphere in which they operate is dry helium, and design life is targeted at 15 years. Figures A-1 and A-2 show the engine housing and engine/compressor assembly with 6 different sealing locations identified. The greatest seal/liner wear occurs at stations designated 1 and 2, Figure A-2. Figures A-3 through A-5 present exploded views of these sealing surfaces. Replaceable ring seals (Figure A-6) are used to effect the seal at location #1, while intimate (line to line) contact performs the same function at the region designated as #2, Figure A-2.

Experience has shown that the displacer must be "free floating" at time of engine startup; the engine will not start if there is any significant frictional drag between the interacting surface of the displacer rod and its liner. A ring seal cannot be used at this location because that type seal loads the liner wall sufficiently to prevent easy motion of the rod.

In preparation for this program, a literature search was made to accumulate pertinent information and (concurrently) a number of testing facilities (Table A-1) were investigated to determine if equipment and techniques are readily available for proving the relative worth of one candidate sealing system over another. The materials data collected from this effort are sufficient to narrow the field of candidate materials, but no testing service contacted appears to have the capability of reproducing seal wearing conditions experienced by the sealing members in the subject engine. It is concluded that bench-testing of sub-size specimens will add little to the information bank already made available by the industry. The needs of this program will best be met by evaluating the performance, and post-test condition of a limited number of representative components operated under representative testing conditions.

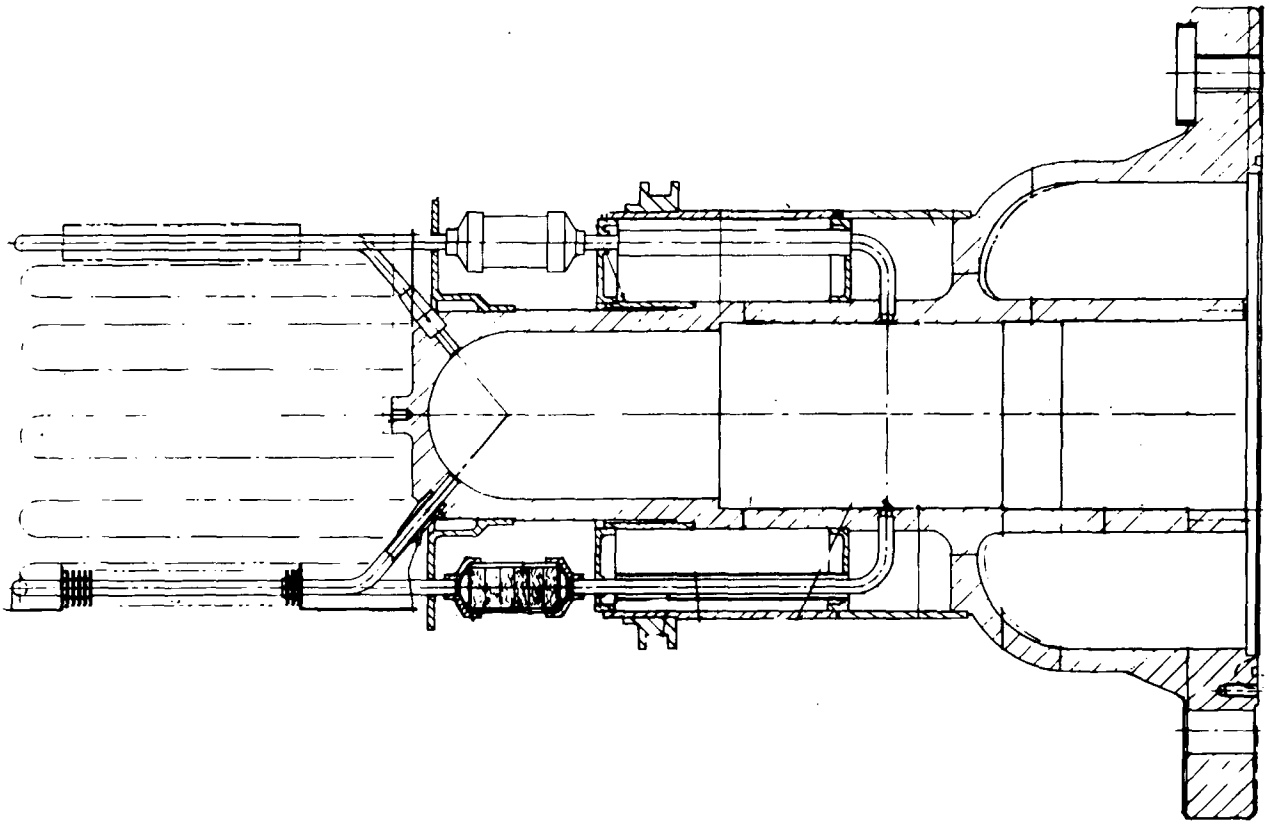

Figure A-1. Proto 2 Engine Housing Assembly

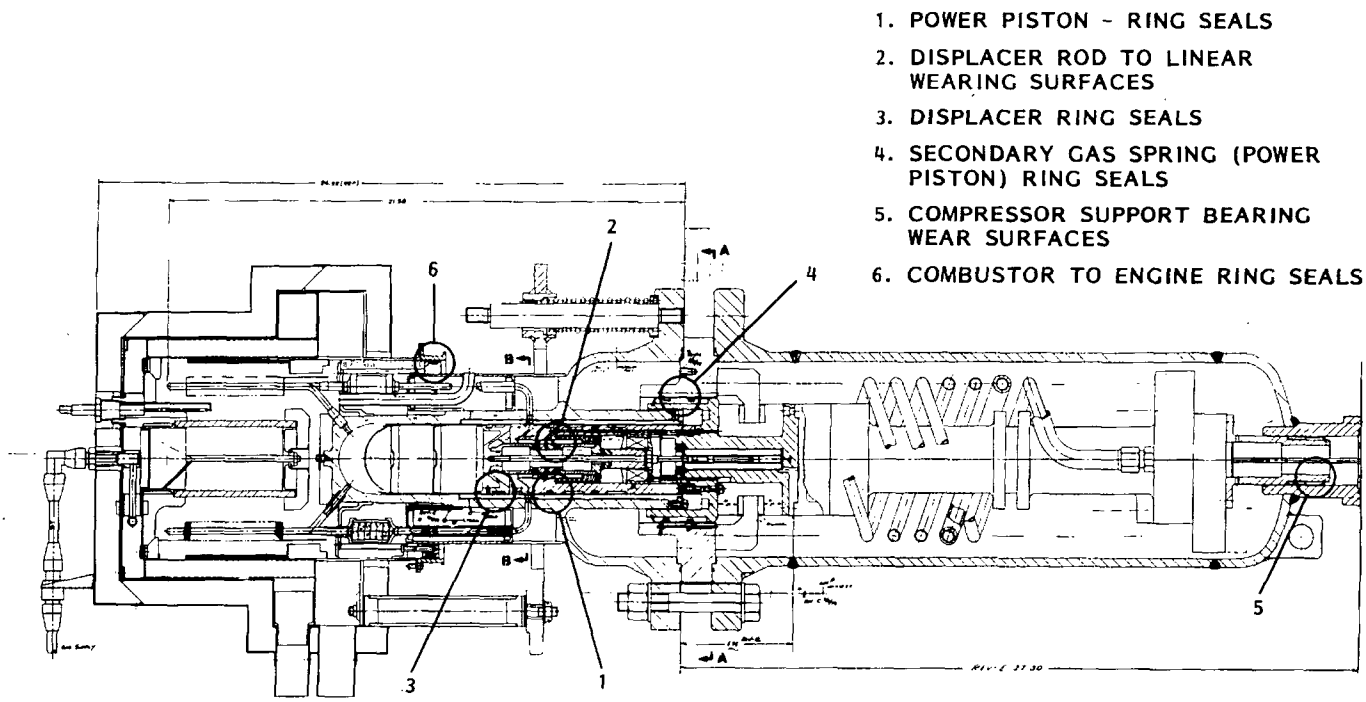

Figure A-2. Engine/Compressor Assembly

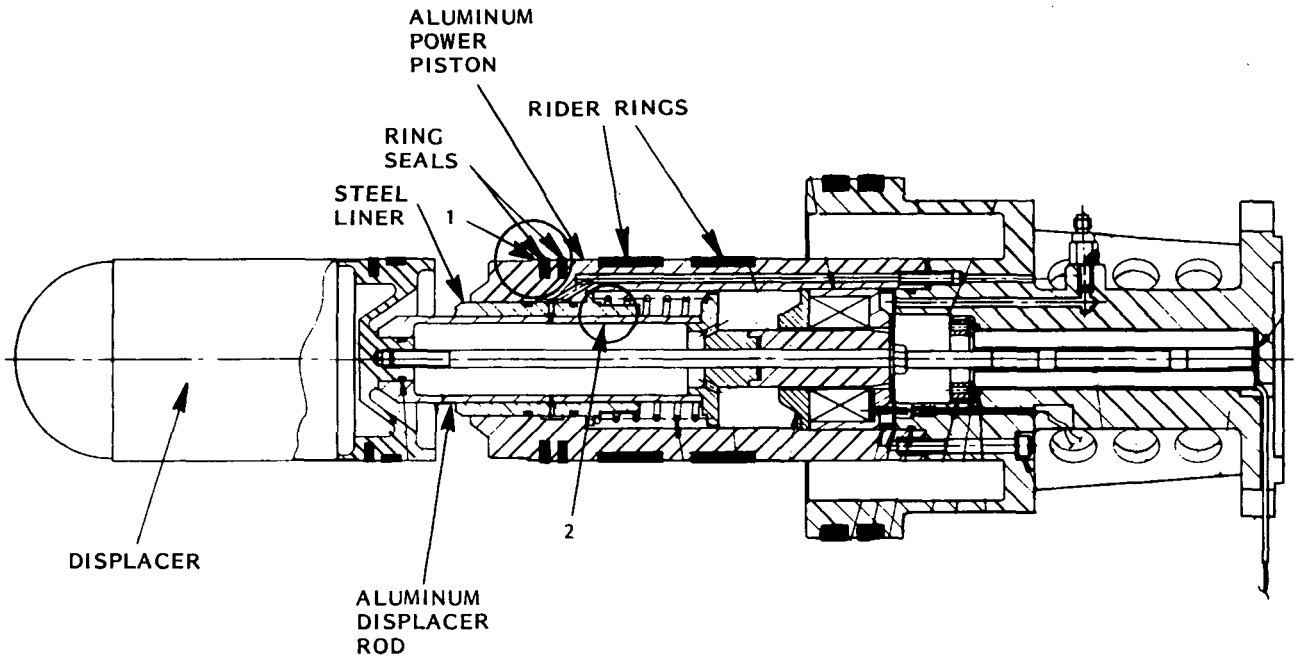

Figure A-3. Seal Positions Showing Most Wear After Engine Tests

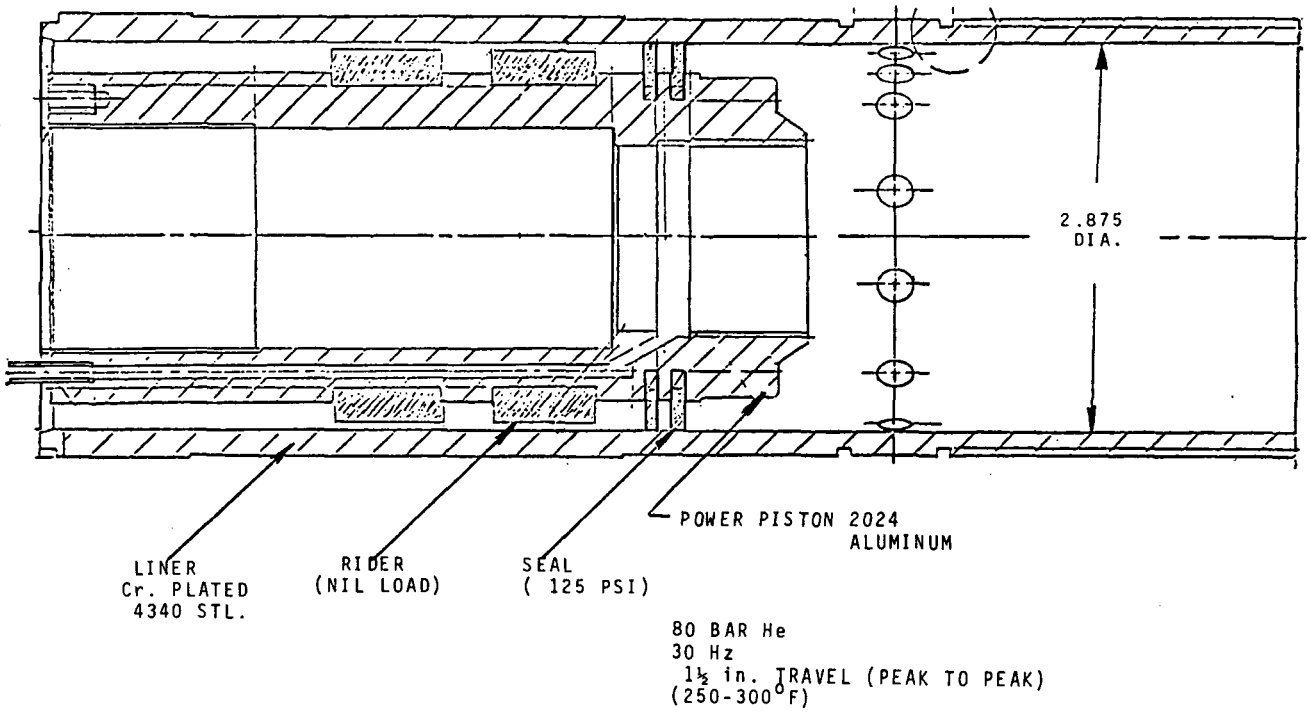

* Location Number 1, Figure 3.

Figure A-4. Power Piston/Liner Assembly*

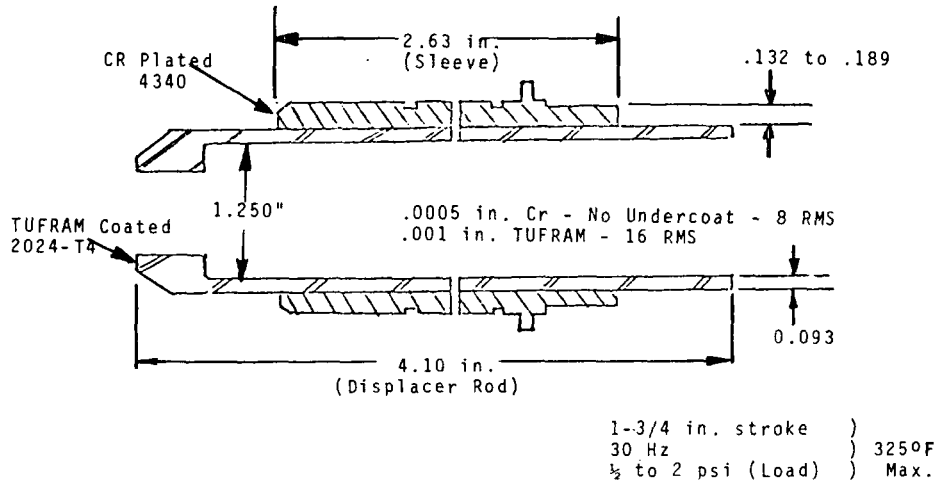

THERMAL MISMATCH

Radial Fits: .0009 Min. Gap (Room)

.0004 Max. Gap (Operation)

*Location Number 2 , FIG. 3.

Figure A-5. Displacer Rod/Liner Assembly*

P/N	NAME	MATERIAL
P1	RING	K-30C (REF; KOPPERS P/N 83919A00)
P2	RING	K-30H (REF; KOPPERS P/N 3920A00)

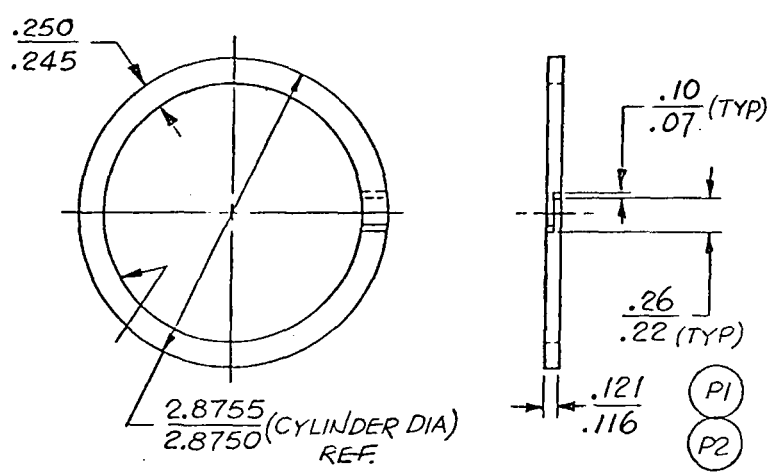

SEAL RING GROOVE DIMENSIONS		
WIDTH	DEPTH (FROM MAX. CYL. I.D.)	WT.
.128/.125	.272/.269	

Figure A-6. Typical Ring Seal Geometry

Table A-1. Facilities Investigated for Possible Wear Testing

1.	Battelle, Columbus, OH
2.	Rogers Corp., Lithonia, GA
3.	Dixon Corp., Bristol, RI
4.	Sargent Industries, Stillman Seal Divn, Carlsbad, CA
5.	Fluorocarbon, Mechanical Seal Divn, Los Alamitos, CA
6.	Bal Seal Engineering Co., Tustin, CA
7.	Auburn Mfg. Co., Middletown, CT
8.	Parker MolyGard Wear Rings, Salt Lake City, UT
9.	Wyle Laboratory, Huntsville, AL
10.	G. E. Schenectady, NY
11.	Union Carbide, Speedway, Indianapolis, IN
12.	G. E., Bldg. 100, King of Prussia
13.	Garloc Bearing Divn, Cherry Hill, NJ

A.2 PROGRAM PLAN

A.2.1 TESTING METHOD

Equipment of the type shown in Figure A-7 will be fabricated and used to identify promising seal material systems for life testing in an operating Stirling engine. A small electric motor is used to power a simulated Stirling engine type displacer rod and power piston (loads and motions duplicated). The ring seals, assembled on the piston, will be of Proto 2 design configuration (Figure A-6) as will their interfacing liners. A system of venting holes and valves will be used to shuttle 250°F helium across seal/liner interfaces (125 psi differential pressure). Each set of candidate ring seals and liner will be subjected to 72 hours total testing time with a start/stop cycle imposed every 1/2 hour, simulating normal operation of the subject engine. The performance of the seals will be monitored by recording pressure change across sealing surfaces during test. Post-test weighing and measurement of ring seals and evaluation of liner wearing surfaces (one liner per test) will assist determination of the worth of each sealing system. The serviceability of different "displacer rod/liner" combinations will be tested at the same time as the ring seals are being evaluated, since different "rods" will be mechanically attached directly to the body of the piston.

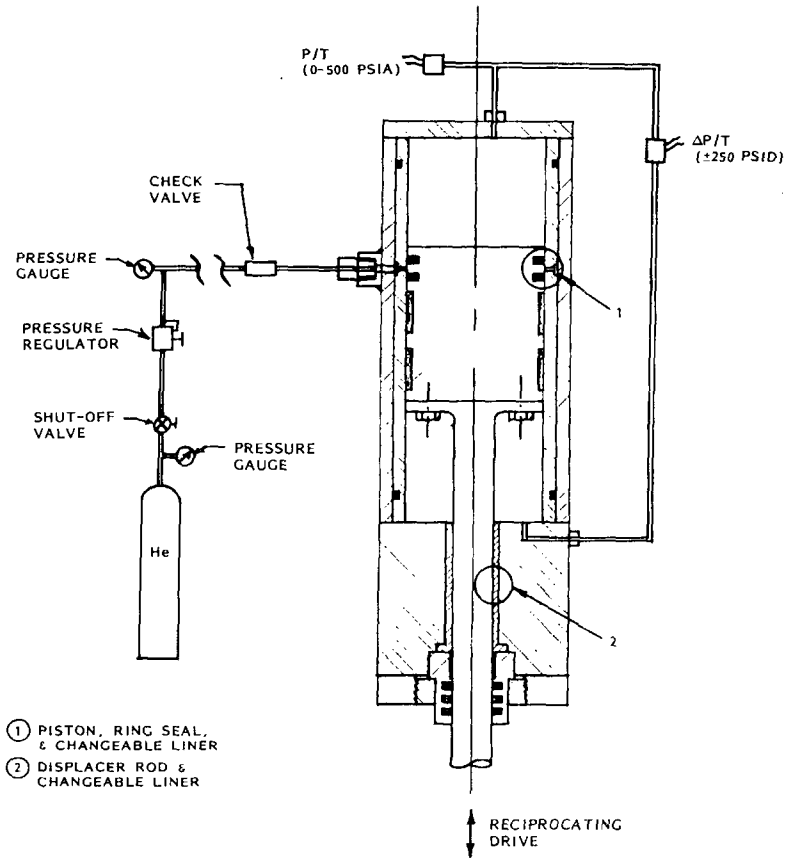

Figure A-7. "In-House" Seal Testing Machine

A.2.2 RING SEAL/LINER CANDIDATE MATERIALS

Ring seals of the type shown in Figure A-6 will be evaluated in this program. A careful study of bench-test results obtained by other investigators, over the past 20 years, resulted in the selection of the materials testing matrix shown in Table A-2. The approximate composition of the 7 different ring seal materials selected for test is shown in Table A-3.

Of the ring seals shown on Table A-2, only VESPEL (21) has seen service in an actual FPSE; approximately 0.030 inch of wear in approximately 69 hours of movement against a chrome-plated 4340 steel liner. This rate of wear experienced by VESPEL (21), 0.0005 inch per hour, is at least 100 times greater than the wear rate predicted by results obtained in bench tests. Chromium particles, stripped off the wall of the liner during service, has obviously exaggerated the wear of the seal. The planned program uses VESPEL 21 seals against chrome-plated 440C stainless steel for control purposes. Since 440C is significantly harder than 4340 steel it may be useful in the uncoated condition; chrome particles are not available to act as

Table A-2. Materials Matrix for Ring-Seal Wear Experiments

	Piston Material	Ring Seal Material (1)	Liner (~12 RMS)	
			Material	Coating
1	2024-T4 Al	Vespel 21	440 C(2)	Cr Plate (2)
2	"	K30C	"	"
3	"	Rulon LD	"	"
4	"	K30C	"	None
5	"	Rulon LD	"	"
6	"	Vespel 21	"	"
7	"	Vespel 211	"	Xylan + MoS2
8	"	Envex 1115	"	CR + MoS2
9	"	Envex 1228	"	None
10	"	K30C	"	MoS_2
11	"	Envex 1228	"	MoS_2
12	"	K30C	"	Xylan
13	"	K30C	Nitronic-60	None
14	"	Rulon J	"	None

NOTES: (1) Approximate characteristics and composition of Ring-Seal materials are listed in Table A-3.

(2) The current design specifies 4340 steel (Cr Plated) with a finish of 12 RMS.

Table A-3. Approximate Composition of Ring-Seals

Seal Material	Matrix	Filler	Producer	Coef. of Exp. (1)
K30C	PTFE	Carbon Graphite	Koppers	50
Rulon J	"	Poly	Dixon	52
Rulon LD	Polymeric Fluoro-carbon	PTFE	Dixon	35
Envex 1228	Polyimide	"	Rogers	30
Envex 1115	"	MoS_2	Rogers	27
SP 21	"	Graphite	DuPont	27
SP 211	"	Graphite PTFE	DuPont	29

Note: (1) Parallel to molded direction
(50° - $200^{o}C$) in./in./$^{o}F \times 10^{-6}$

potential abrasive material during operation. In addition, 440C has an excellent track record as an anti-galling liner material applied in other type engines over a 20-year span. One other liner material, NITRONIC 60, will be briefly evaluated as it too appears to be an excellent candidate for FPSE liner service.

In all, 14 different ring seal/liner combinations will be subjected to a maximum of 72 hours (each) experience closely approximating that expected during operation in the subject engine. Allowing for set-up and breakdown time, each test run will require about one week to complete; total test time is 14 weeks, as noted in Figure A-8. Additional 72 hours (minimum) test runs will be repeated using the two best sets of seal/liner combinations identified by initial testing for confirmation purposes.

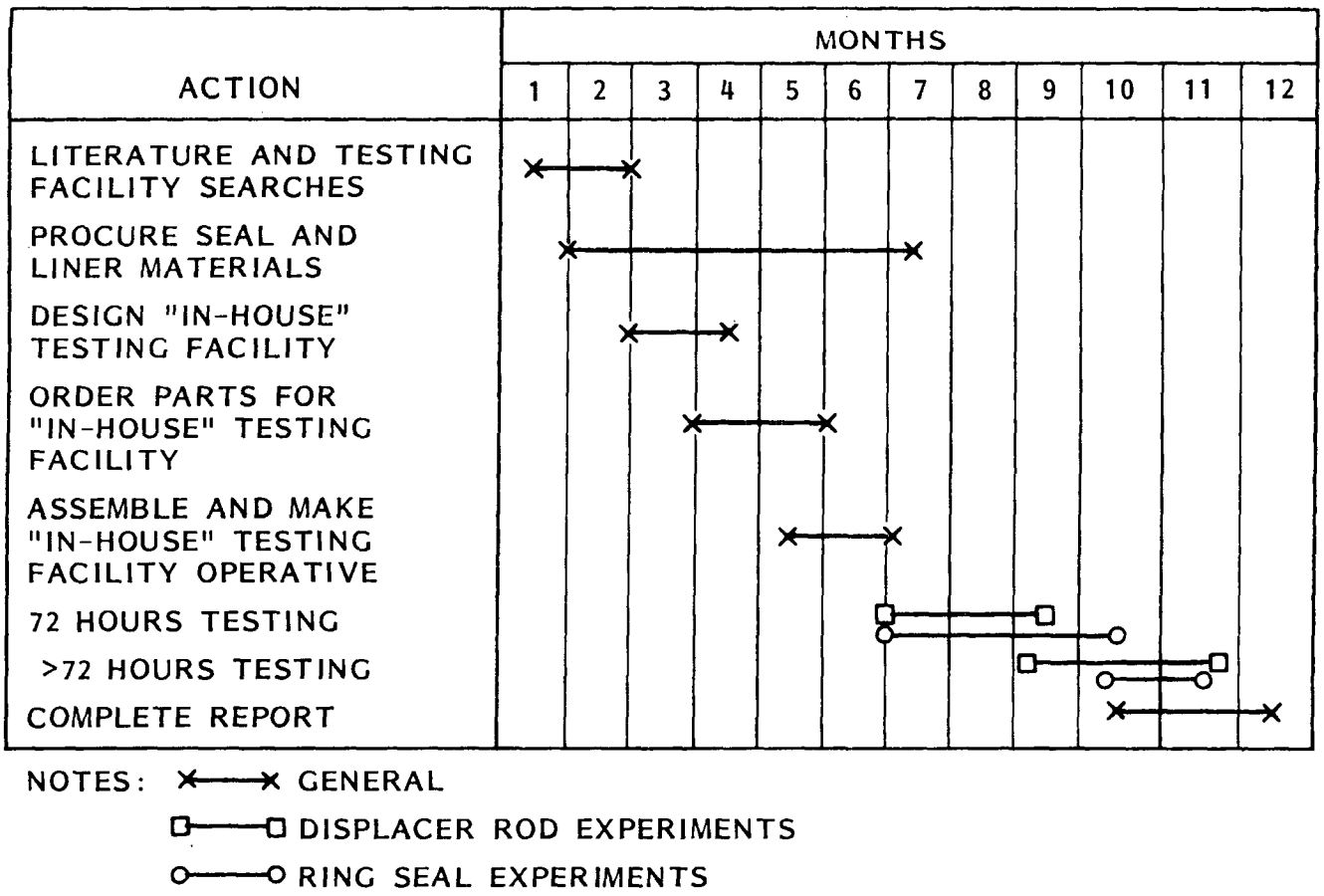

Figure A-8. Seal Testing Program Schedule

A.2.3 LOW LOAD EXPERIMENTS (NON-RING SEALS)

As explained earlier in the text, ring seals cannot be used between displacer rod and its liner; separation of helium at different pressures is accomplished by intimate contact between the interfacing surfaces of rod and liner. To date, MoS_2 coated TUFRAM (Table A-4) on 2024-T4 Al rods has provided the best wear resistance when interfaced with MoS_2 coated chrome plated 4340 steel liners. However, solid particles (unidentified) appear to score the surfaces of the TUFRAM coating and permit exposed aluminum to gall against, and weld to, the surfaces of the liner. Candidate material systems designed to prolong the life of the displacer rod to liner seal are shown in Table A-4. At the rate of one week required per test, all initial testing will be completed in about 10 weeks. The best performing material systems will be entered into longer term tests (Figure A-8) for accumulation of additional data.

Table A-4. Materials Matrix for Displacer Rod Wear Experiments

	Displacer		Liner	
	Material	Coating(s)	Material	Coating(s)
1.	2024-T4 Al	(1) TUFRAM+MoS_2	4340 Steel	CrPlate & MoS_2
2.	"	(2) KOPTON+ MoS_2	"	"
3.	"	Tufram + MoS_2	440C	MoS_2
4.	"	(3) RULON LD	"	None
5.	440C	"	"	"
6.	"	"	Nitronic-60	"
7.	"	"	440C (or) Nitronic-60	MoS_2
8.	"	"	440C	Xylan
9.	"	RULON J	Nitronic-60	None
10.	"	RULON LD+MoS_2	Grey Cast-Iron	"

NOTES: (1) $\approx$ 0.0015 inch Thick; Al_2O_3 and PTFE on Aluminum.
(2) Kopper Proprietary Coating; 0.0015 inch thick.
(3) All RULON Coatings (Table 2) 0.010 inch thick.

APPENDIX B

INTEGRATED TEST PLAN

APPENDIX B

TEST PLAN SUMMARY FOR PROTO 2 FREE PISTON STIRLING ENGINE (FPSE)/ COMPRESSOR/COMBUSTOR ASSEMBLY - INTEGRATED TEST FACILITY

B.1 INTRODUCTION

This test plan is intended to be a flexible guide in evaluating the operational and performance characteristics of the FPSE/inertia compressor assembly.

B.2 PURPOSE

The purpose of this test is to evaluate the following:

1. Proof of design concept.
2. Performance of the Proto 2 FPSE, compressor and combustor in the assembled/ integrated configuration.
3. Optimization of the engine's gas spring and related mass characteristics.

B.3 EQUIPMENT TO BE TESTED

Performance testing of the FPSE/compressor integrated assembly will be performed in the configuration described in General Electric Company Drawing 919E300G1. The compressor will have been previously tested on a component basis. The combustor subassembly will be configured as defined in General Electric Company Drawing 919E253G1, and will have been previously tested on a component basis. The engine/compressor/combustor assembly will be installed in a Stand Assembly per Drawing 919E188G1 in accordance with Assembly Drawing 919E190.

B.4 TEST FACILITY

The test facility, diagnostic instrumentation, and control systems have been designed, assembled and checked out. Each facet of the total system has been broken down into discrete subsystems. These subsystems are:

- Console Assembly
- Temperature Monitor Panel

- Stirling Engine Controls
- Meter Relay Panel
- Gauge and Meter Panel
- Glycol Mixture Pump Standard
- Glycol Pumping Schematic
- Natural Gas Supply System
- Combustion Air System
- Helium Supply Loop
- R22 Refrigerant Loop
- Controls Schematic
- Instrumentation Schematic

B.5 SAFETY

The safety of the individuals operating and/or working near the test facility is of paramount importance. Their safety must come first. Proper care and technique in handling the various components must be followed to obtain valid test data. In both cases, good judgement must be exercised. In general, if you do not know what to do, ask the component design engineer or test supervisor before proceeding.

The following are some general safety guidelines. Please add to this list as required.

1. Wear safety glasses at all times.

2. Coordinate all activities through the Testing Supervisor.

3. Do not open any valves until appropriate pressure gauges have been checked for existing environmental conditions.

4. Do not attempt to open any portion of helium system until entire system is at ambient pressure conditions.

5. Do not attempt to run engine if safety circuits are not operable.

6. Keep helium gas bottles chained at all times.

7. Keep transient personnel limited to two persons and have them check in with Test Supervisor.

8. Assume all combustor parts are hot and respect same accordingly.

9. Do not allow any smoking in test facility.

10. Vent all refrigerant (R22) out of doors when venting down system.

11. All pressure relief valves must be vented downward towards floor.

12. All electrical components must be properly grounded.

13. Inspect natural gas system for leaks on a periodic basis.

14. Do not attempt to reignite burner if frit ID temperature is greater than 1200°F.

15. Make certain combustion products are exhausted out of doors through vent system. Purge combustor system with air before attempting to ignite burner.

16. Clear area around engine prior to igniting burner.

B.6 TEST PREPARATION

B.6.1 ASSEMBLY

1. The test hardware shall be assembled per GE Dwg. 919E190.

2. All instrumentation shall be installed per Design Engineering instructions.

3. An assembly build record shall be kept by both assembly and engineering personnel.

B.6.2 FACILITY INTEGRATION

1. The unit shall be delivered to the test facility and mounted in the test cell.

2. All interconnecting piping shall be connected and checked for proper location and the integrity of all joints.

3. The engine is to be placed under a vacuum for 15-20 minutes and then valved off. Check for leaks and for loss of vacuum level.

NOTE

RATE OF EVACUATION MUST BE LESS THAN 2 PSI PER SECOND AND VACUUM PUMP MUST BE CONNECTED TO THE BOUNCE SPACE VOLUME. DO NOT OPEN ENGINE COMPRESSION SPACE VALVE UNTIL THE DESIRED EVACUATION LEVEL HAS BEEN OBTAINED.

B.7 TEST PLAN

The engine will be energized by setting a predetermined firing rate (energy release rate) on the combustor at a given engine charge pressure level. After the engine has started and the compressor has begun to pump refrigerant, the mass flowrate will be adjusted by either a manual valve or a thermal expansion valve. The pressure ratio across the comperssor will be adjusted by establishing the desired temperature levels of both the condenser and evaporator in conjunction with the throttle valve position. Data will be taken to determine the resulting performance characteristics at the various engine charge pressures, combustion firing levels, compressor pressure ratios and flowrate levels. The test matrix is delineated in Table B-1.

B.8 TEST RECORDS

Test records will be maintained at all times. These will take the form of either entries in the Engine Log Book and/or recorded test data on the specially created forms. The log book will stay with the engine. The responsible test supervisor and/or test engineer will enter all pertinent data and observations and sign and date the entries. Master copies of all data sheets will be maintained by the Manager of Heat Engines Engineering. Copies of these data sheets will be available to all personnel. However, the master copies will stay in the files.

Table B-1. Operating Test Point Definition

TEST POINT NO.*		X - Y - Z			X - Y - Z		
FIRING RATE (BTU/HR)		24,400			41,000		
FUEL FLOWRATE (SCFM)		0.44			0.73		
AIR FLOWRATE (SCFM)		4.25	4.89	5.52	7.09	8.15	9.22
(ALLOWANCE = ± 3%) (% EXCESS)		0	15	30	0	15	30
HELIUM CHARGE PRESSURE (PSIA)		870 ± 25			870 ± 25		
COOLANT FLOWRATE (GPM)		2.0 ± 0.05			2.0 ± 0.05		
EVAPORATOR R-22 DISCHARGE PRESSURE/ TEMPERATURE (PSIA/°F)		DEGREE DAY			DEGREE DAY		
	COOLING MODE	80	95		95	105	
	PRESSURE	100	105		94	99	
	TEMPERATURE	57	59		52	56	
	HEATING MODE	47	62		32	17	
	PRESSURE	71	93		49	38	
	TEMPERATURE	37	52		18	5	
CONDENSER R-22 INLET PRESSURE (PSIA)	COOLING MODE	80	95		95	105	
	PRESSURE	193	235		271	301	
	HEATING MODE	47	62		32	17	
	PRESSURE	206	211		233	222	

*TEST POINT NUMBER IDENTIFICATION = X - Y - Z

X = FIRING RATE IN BTUH ÷ 1000

Y = EXCESS AIR IN 100 x % OF EXCESS AIR

Z = DEGREE DAY

EXAMPLE: LOW FIRING RATE, 15% EXCESS AIR, 95° DAY
TEST POINT NUMBER = 24.4-15-95

GENERAL ELECTRIC

Space Division

Headquarters: Valley Forge, Pennsylvania ☐ Daytona Beach, Fla. ☐ Evendale, Ohio

☐ Huntsville, Ala. ☐ Bay St. Louis, Miss. ☐ Houston, Texas ☐ Sunnyvale, Calif.

☐ Beltsville, Md. ☐ Tacoma, Wash. ☐ Palmdale, Calif. ☐ Bedford, Mass.

☐ Washington, D.C. Area