GE DOCUMENT NO. 80SDS4215

DEVELOPMENT AND DEMONSTRATION OF A STIRLING/RANKINE HEAT ACTIVATED HEAT PUMP

CONTRACT NO. EC-77-C-02-2911

SEMI-ANNUAL REPORT

NO. C00/2911-5

JANUARY THROUGH JUNE 1979

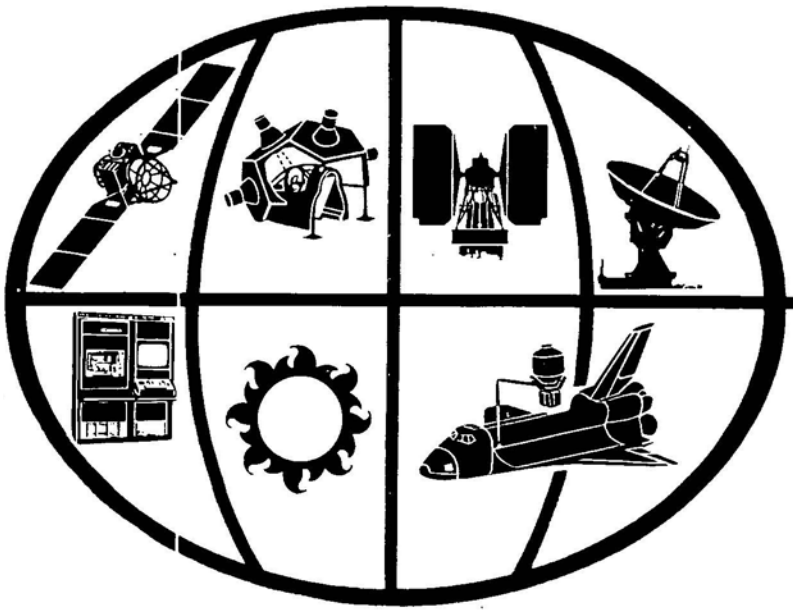

space division

GE DOCUMENT NO. 80SDS4215

DEVELOPMENT AND DEMONSTRATION OF STIRLING/RANKINE HEAT ACTIVATED HEAT PUMP

CONTRACT NO. EC-77-C-02-2911
SEMI-ANNUAL REPORT
NO. C00/2911-5
JANUARY THROUGH JUNE 1979

GENERAL ELECTRIC
SPACE DIVISION
Valley Forge Space Center
P. O. Box 8555 • Philadelphia, Penna. 19101

TABLE OF CONTENTS

Section			Page
1	INTRODUCTION		1-1
	1.1	Background	1-1
	1.1.1	Phase I Results	1-1
	1.1.2	Phase II Objectives	1-1
	1.1.3	Phase II Prior Accomplishments	1-4
	1.2	Progress Summary	1-8
2	PROTOTYPE 2 DEVELOPMENT		2-1
	2.1	Introduction	2-1
	2.2	Product Design	2-1
	2.2.1	Summary	2-1
	2.2.2	System Performance and Operating Cost Savings	2-1
	2.2.3	Component Selection	2-14
	2.2.4	Planned Activity for Next Period	2-23
	2.3	Combustor	2-24
	2.3.1	Summary	2-24
	2.3.2	Design Requirements	2-24
	2.3.3	Combustor Design Description	2-25
	2.3.4	Fabrication	2-32
	2.3.5	Assembly/Facility Integration	2-32
	2.3.6	Testing	2-32
	2.3.7	Planned Activity for Next Period	2-33
	2.4	Engine	2-34
	2.4.1	Summary	2-34
	2.4.2	Design Requirements	2-34
	2.4.3	Engine Design Description	2-34
	2.4.4	Fabrication	2-43
	2.4.5	Planned Activities for Next Period	2-45
	2.5	Compressor	2-46
	2.5.1	Summary	2-46
	2.5.2	Design Requirements	2-46
	2.5.3	Compressor Design Description	2-46
	2.5.4	Fabrication	2-56
	2.5.5	Testing	2-57
	2.5.6	Planned Activities for Next Period	2-57
	2.6	Controls	2-58
	2.6.1	Summary	2-58
	2.6.2	Circuit Design	2-58
	2.6.3	Normal Controls Operation	2-60
	2.6.4	Power Wiring	2-62
	2.6.5	Outdoor Unit Controls Packaging	2-63

TABLE OF CONTENTS (Cont)

Section			Page
	2.6.6	Procurement and Fabrication	2-64
	2.6.7	Planned Activity for Next Period	2-65
2.7	Air Handlers		2-66
	2.7.1	Summary	2-66
	2.7.2	Design Requirements and Characteristics	2-66
	2.7.3	Air Handler Design Descriptions	2-69
	2.7.4	Procurement and Fabrication	2-79
	2.7.5	Testing	2-80
	2.7.6	Planned Activity for Next Period	2-81
2.8	Prototype I Experimental Components		2-82
	2.8.1	Summary	2-82
	2.8.2	Second Gas Spring Testing	2-82
	2.8.3	Improved Regenerator	2-90
3	TEST FACILITY UPGRADING		3-1
3.1	Summary		3-1
3.2	Compressor Test Stands		3-1
	3.2.1	Requirements (Proto 2 vs. Proto 1)	3-1
	3.2.2	Test Stand Modifications Planned	3-2
3.3	Integrated Test Stand		3-2
	3.3.1	Requirements (Proto 2 vs. Proto 1)	3-3
	3.3.2	Test Stand Modifications Planned	3-4
3.4	Systems Test Facility		3-6
	3.4.1	Requirements (Proto 2 vs. Proto 1)	3-6
	3.4.2	Facility Modifications Planned	3-7
4	FIELD EVALUATION TEST		4-1
4.1	Summary		4-1
4.2	Field Evaluation Test Description		4-1
	4.2.1	Overall Objectives	4-1
	4.2.2	Schedule	4-2
	4.2.3	Gas Utility Participation	4-3
	4.2.4	Use of Field Evaluation Test Results	4-3
4.3	Site Selection Criteria and Approach		4-4
	4.3.1	General Requirements	4-4
	4.3.2	Selection Criteria	4-5
	4.3.3	Screening Procedure	4-7
4.4	Site Evaluations		4-7
	4.4.1	Comparisons of Sites Evaluated	4-7
	4.4.2	Conclusions and Recommendations	4-10

TABLE OF CONTENTS (Cont)

Section		Page
4.5	Field Evaluation Test Plan	4-10
	4.5.1 System Installation	4-11
	4.5.2 System Checkout	4-11
	4.5.3 Initial Testing	4-11
	4.5.4 Seasonal Performance Testing	4-12
4.6	Field Evaluation Test Design	4-13
	4.6.1 Indoor Unit/Conventional HVAC Interface	4-13
	4.6.2 Outdoor Unit Interconnection	4-14
	4.6.3 Control System	4-15
	4.6.4 Data Acquisition System	4-15
4.7	Planned Activity for Next Period	4-15

LIST OF ILLUSTRATIONS

Figure		Page
1-1	Phase I Flow Diagram	1-2
1-2	Phase II Flow Diagram	1-3
2-1	Proto 2 and Advanced Gas Fired Heat Pump Product Capacity	2-3
2-2	Proto 2 and Advanced Gas Fired Heat Pump Product COP	2-3
2-3	HAHP System Operating Schematics, 95°F Ambient Day	2-5
2-4	HAHP System Operation Schematics, 80°F Ambient Day	2-6
2-5	HAHP System Operating Schematic, 47°F Ambient Day	2-7
2-6	HAHP System Operating Schematic, 17°F Ambient Day	2-8
2-7	HAHP System Operating Schematic, 2°F Ambient Day	2-9
2-8	Conventional Gas Furnace and Air Conditioner Capacity	2-10
2-9	Conventional Gas Furnace and Air Conditioner COP	2-10
2-10	Proto 2 Engine Heater Tube Temperature	2-15
2-11	Savings Penalty Using Only Auxiliary Heat Below Cut-off Temperature	2-19
2-12	Proto 2 Displacer Configuration Map	2-21
2-13	Proto 1 Simulation Results Compared to Test	2-21
2-14	Proto 1 Second Gas Spring Pressure and Displacement History	2-22
2-15	Proto 2 Combustor Assembly	2-26
2-16	Combustor Housing and Preheater Section	2-27
2-17	Assembled Combustor-Bottom View with Igniters in Place	2-27
2-18	Diffuser Ring	2-27
2-19	Burner Element	2-27
2-20	Burner Insulation	2-27
2-21	Assembled Combustor - Burner in Place and Thermocouple Test Leads Connected	2-27
2-22	Two Stage Electric/Gas Valve	2-30
2-23	Proto-2 Pressure Drop vs. Required Air Flow	2-31
2-24	Spin-on Air Filter	2-31
2-25	Proto 2 Combustor/Engine/Compressor Assembly	2-36
2-26	Engine Housing Assembly	2-37
2-27	Displacer/Piston/Adapter Assembly	2-38
2-28	Engine and Stand Assembly	2-44
2-29	Proto 2 Compressor Losses	2-49
2-30	Proto 2 Compressor Performance	2-50
2-31	Proto 2 Compressor Assembly	2-51
2-32	Proto 2 Compressor Assembly-Section View	2-51
2-33	Proto 2 Compressor/Spring Tube Assembly	2-52
2-34	Proto 2 Tubular Spring Coils	2-55
2-35	Controls Circuit Board Block Diagram	2-59
2-36	Air Handler Functional Diagram	2-68
2-37	Outdoor Unit Cabinet Configuration	2-70
2-38	Proto 2 Indoor Unit (GE Model BWE936C100AO)	2-71

LIST OF ILLUSTRATIONS (Cont)

Figure		Page
2-39	Outdoor Unit Assembly	2-73
2-40	Motor and Fan Installation	2-75
2-41	Refrigeration Loop	2-76
2-42	Second Gas Spring Design	2-83
2-43	Proto 1 Second Gas Spring Hardware	2-84
2-44	Proto 1 Free Piston Stirling Engine/Compressor/Second Gas Spring Assembly	2-84
2-45	Predicted Proto 1 Operation with Second Gas Spring	2-86
2-46	Proto 1 Second Gas Spring Pressure and Displacement Test Data	2-87
2-47	Proto 1 Regenerators Assembled into the Engine Housing Assembly	2-91
2-48	Proto 2 Engine Regenerator Assembly	2-93
3-1	Data Processing System	3-5
4-1	HAHP Field Evaluation Test Schedule	4-2
4-2	Duct Interface Concept	4-13
4-3	Duct Interface Concept	4-14

LIST OF TABLES

Table		Page
1-1	Subsystem Status	1-9
2-1	Proto 2 System Performance	2-4
2-2	Proto 2 vs. 1980 Gas Furnace/Electric A/C	2-12
2-3	Advanced HAHP vs. 1985 Gas Furnace Electric A/C	2-13
2-4	Annual Operating Cost Savings by Fuel Type	2-14
2-5	Single vs. Dual Firing Rate Operating Cost Comparison	2-16
2-6	Proto 2 Predicted Performance	2-19
2-7	Proto 2 Displacer Rod Size Options	2-20
2-8	Proto 1 Computer Simulation Results	2-22
2-9	Proto 2 Combustor Design Requirements	2-24
2-10	Proto 2 Material Selections	2-26
2-11	Proto 2 Performance Summary	2-28
2-12	Projected Combustor Heat Loss Summary	2-29
2-13	Proto 2 Engine Design Parameters	2-35
2-14	Proto 2 Engine Design Requirements	2-35
2-15	Seal and Rider Ring Design Parameters	2-42
2-16	Seal and Rider Ring and Bearing Materials	2-42
2-17	Proto 2 Compressor Design Requirements	2-47
2-18	Proto 2 Compressor Design and Performance Parameters	2-48
2-19	Hydronic System Operation	2-61
2-20	Refrigerant Switchover Valve Operation	2-62
2-21	Performance Requirements	2-67
2-22	Initial Test Results with Second Gas Spring	2-86
2-23	Proto 1 Second Gas Spring Test Configuration	2-88
2-24	Comparison of Proto 1 Second Gas Spring Test Data to Computer Simulation (5.5 lb Compressor)	2-89
2-25	Regenerator Energy Loss Summary	2-91
4-1	1985 Operating Cost Savings - Advanced HAHP vs. Advanced HVAC	4-5
4-2	Candidate Sites	4-8
4-3	Site Comparison Summary	4-9
4-4	Estimated Heating and Cooling Loads	4-10
4-5	Principal Installation Requirements	4-12

SECTION 1

INTRODUCTION

SECTION 1
INTRODUCTION

1.1 BACKGROUND

In January 1975, General Electric embarked with the American Gas Association (AGA) on a multi-phase program for the development of a Gas Heat Pump (GHP). The Department of Energy (DOE) joined General Electric and the AGA in the program in 1976, and the Gas Research Institute assumed responsibility for the program from the AGA in 1977.

Phase I of the program was completed in December 1975, and Phase II was initiated in February 1976.

1.1.1 PHASE I RESULTS

The Phase I program followed the task structure shown in Figure 1-1. The primary objective of this program was to evaluate, through an analytical effort, if a gas heat pump product could evolve into a viable business venture. A comparison of the possible heat activated heat pump concepts showed that the Stirling/Rankine and the absorption cycle were the most promising from the standpoint of performance (potential operating savings), region of application, and market application (residential and/or commercial); the product design was performed in sufficient detail to show that the variation in manufacturing costs of the candidate systems would not significantly affect payback considerations. Further refinement of the design, cost, and performance for the two candidate systems and a definition of product introduction scenario and pricing strategies allowed a business evaluation of the two concepts to be completed. The results of these efforts were reviewed within GE and with AGA and gas industry representatives. As a result of Phase I effort, the Stirling/Rankine concept was selected as the most promising approach and a decision was made to proceed with the Prototype Development, Phase II.

1.1.2 PHASE II OBJECTIVES

The objective of the Phase II program is to demonstrate that the performance estimates generated during Phase I can be realized and that cost goals are realistic. The Phase II task flow diagram is shown in Figure 1-2.

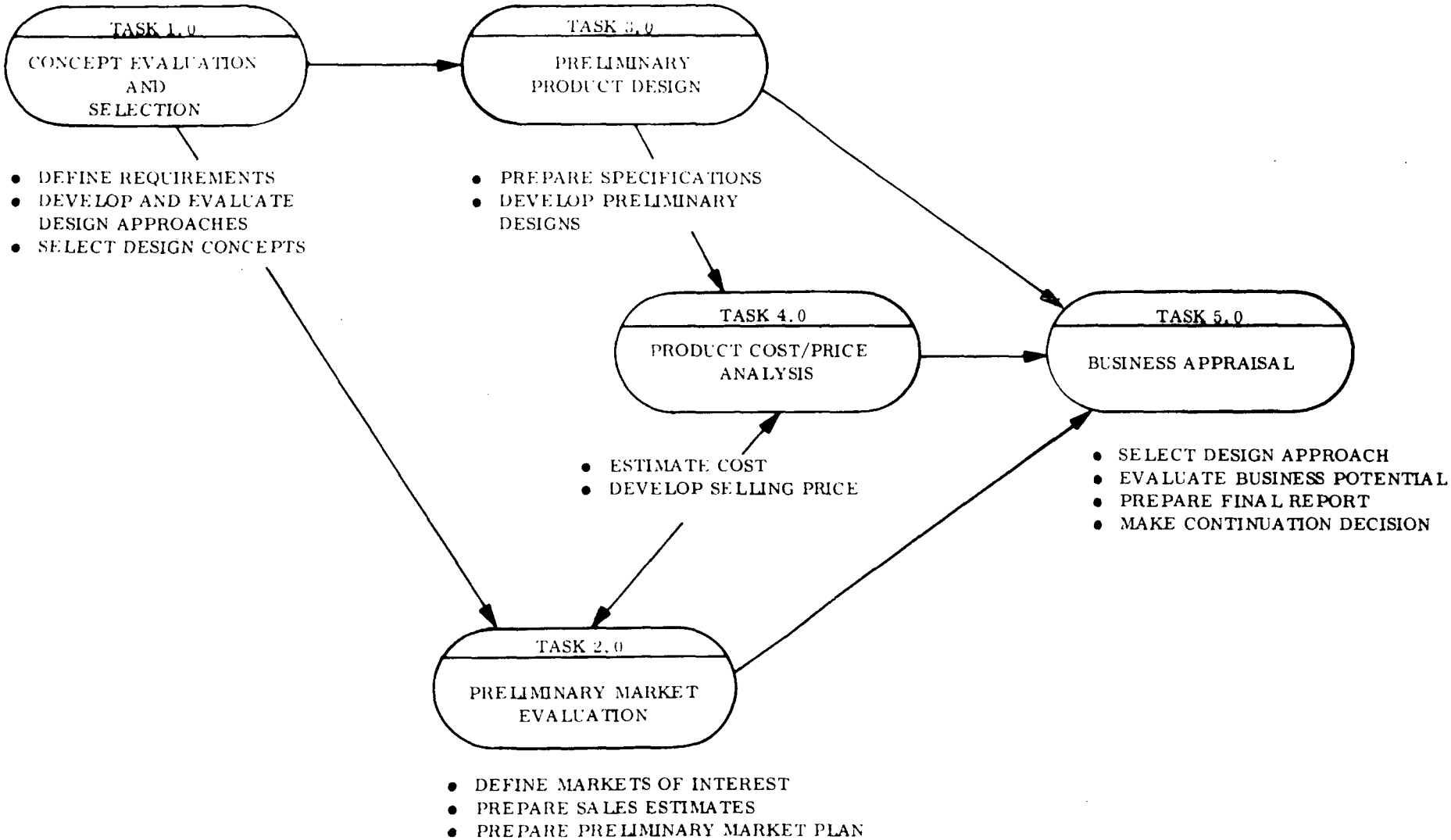

Figure 1-1. Phase I Flow Diagram

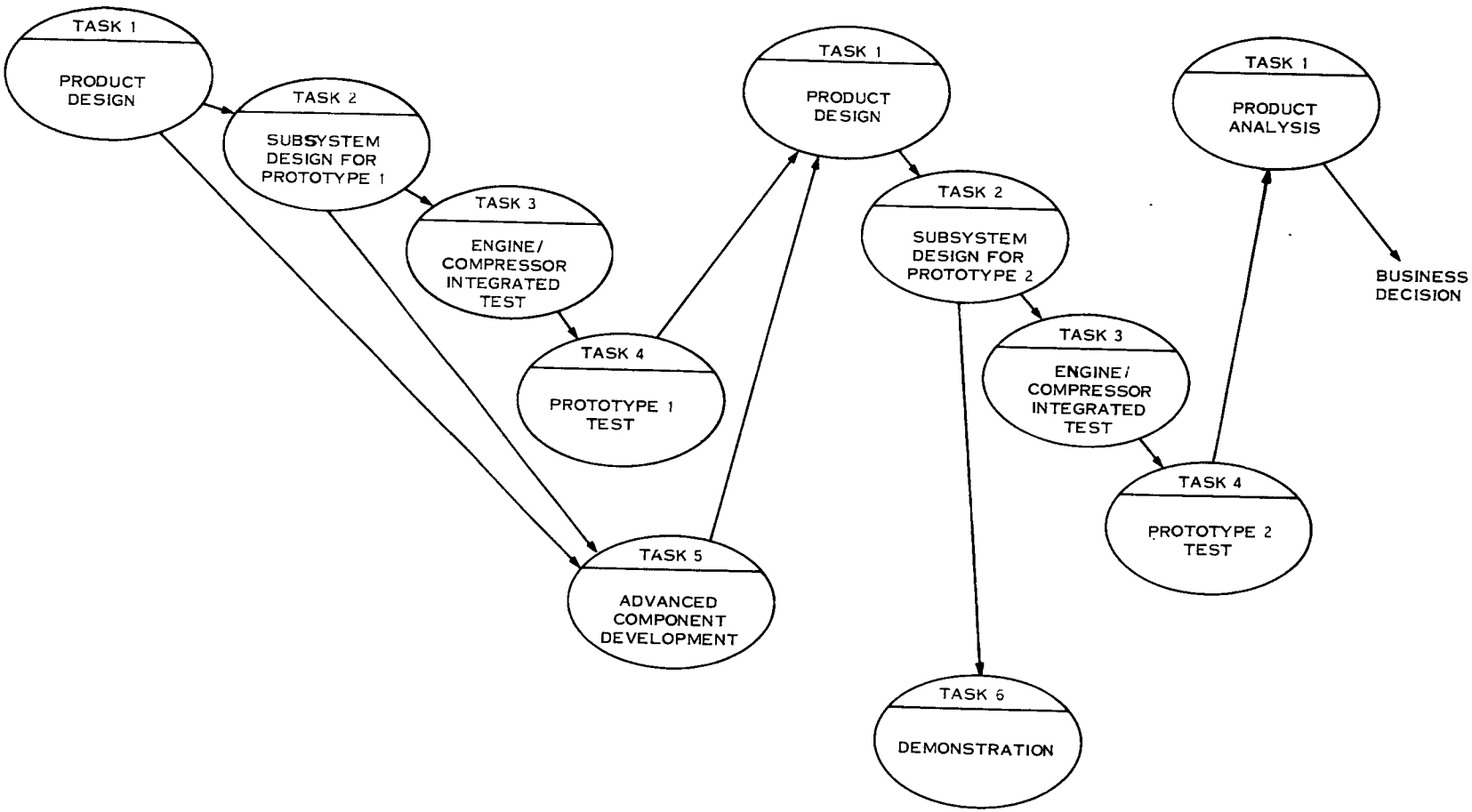

Figure 1-2. Phase II Flow Diagram

Two generations of prototype hardware will be developed during the Phase II program. Prototype 1 was the first attempt to test a complete Stirling/Rankine GHP system with heat pump configured hardware. This system was comprised of hardware of a primarily developmental nature. The Prototype 2 system consists of more mature hardware, incorporating the results of the Prototype 1 development effort and designed toward the eventual product.

1.1.3 PHASE II PRIOR ACCOMPLISHMENTS

The gas heat pump can be described in terms of five major subsystems: the natural gas combustor, the Stirling engine, the refrigerant compressor, the controls, and the air-handlers.

The Prototype 1 GHP consists of a 3-ton, split system targeted to provide approximately 64,000 BTU/hr in the heating mode at a nominal 45°F ambient temperature. The overall product performance goal was to achieve Coefficients Of Performance (COP) of 1.6 and 0.85 for the heating and cooling modes, respectively (excluding the electrical power requirements). The electrical power required for fans, blowers and pumps was set at less than 1500 watts. Based on these performance levels, the following performance goals were assigned to the major subsystems:

- Stirling Engine Cycle Efficiency: 32%
- Refrigeration Loop COP: 3.5%
- Overall Combustion Efficiency: 80%

The following sections summarize the accomplishments during the previous Phase II reporting period for the system design and each of the subsystem areas.

<u>Product Design</u>

During the previous reporting period, product design effort was concentrated in two primary areas: (1) system-level testing of Proto 1 HAHP hardware, and (2) start of the Proto 2 design.

Results of Proto 1 system testing in both heating and cooling modes were evaluated extensively with respect to system matching, particularly with respect to engine and compressor load balancing. Three different weights of compressor piston were tested and complete characterization of the engine-compressor combination was accomplished. The need for a positive seal on the displacer was identified as a means of further improving engine performance. Energy balance analyses also indicated several other areas of potential design improvements. It was determined from the tests that the COP and capacity goals for both the heating and cooling modes can be met.

The majority of the tests were performed at the 95°F (cooling) and 45°F (heating) standard rating day conditions but tests also were run and analyses made for cooling conditions at outdoor temperatures from 65°F to 100°F and heating conditions down to the 25°F-30°F range. System operation schematics were generated for the various test points. The importance of heat pump component matching was established and the sensitivity of controlling parameters quantified.

As a result of energy balance analyses of Proto 1 test data, a displacer ring was added, which in subsequent tests provided a significant improvement in engine efficiency. The desirability of adding a second gas spring to improve compressor matching resulted in plans being made to retrofit the Proto 1 engine for verification testing.

Proto 2 design requirements for components and subsystems were established during the previous reporting period. These were based on characterizations of Proto 1 hardware and translated to realistic Proto 2 goals. System options and design trade-offs were established for a number of areas including engine stroke limits, outdoor coil design and outdoor air handler configurations. Potential compressor piston overstroke conditions at low ambient temperatures were investigated along with alternative solutions. It was determined that a reduction in firing rate at low temperatures would be a feasible solution, when coupled with appropriate supplemental heating capacity and a proper switchover point.

Combustor

The Proto 1 combustor firing level was pre-set for system testing and adjusted as necessary to achieve desired operational values. Combustor performance results during testing compared very well against predicted values. A combustor efficiency of 82% was achieved.

Design of the Proto 2 combustor was also commenced during the previous reporting period. It was determined that a two stage firing schedule would be required to insure meeting system COP goals. Proto 2 design changes were introduced to improve reliability and extend component life to 15 years.

Engine

Proto 1 engine power output during system testing was lower than predicted; however, several design options were identified offering substantial potential for improvement.

Design of the Proto 2 Stirling engine progressed into the detail design phase. Lessons learned with the Proto 1 unit led to changes for Proto 2 which included engine-compressor resizing for optimized matching, improved power piston and displacer seals and bearings, redesigned regenerator housing, improved heater head contouring to reduce the maximum fin temperature and elimination of twenty-four brazed heater head tube joints. The Proto 2 design incorporated an integral second gas spring, an electromagnetic engine start mechanism and materials changes to increase fatigue endurance and allowable creep.

Compressor

During Proto 1 testing in the previous reporting period, it was determined that selection of an optimum compressor piston mass was critical to improving overall engine-compressor performance. Although the Proto 1 hardware configuration did not permit increasing engine operating frequency to more closely approach the compressor's natural frequency, it was determined that this would be a desirable provision to make for the Proto 2 design.

The Proto 2 linear inertia compressor design was commenced during the previous reporting period. Operating characteristics were selected based on analysis of Proto 1 testing results. An isentropic efficiency goal of 70% was established for the 95°F day operating conditions. A detailed compressor stress analysis was performed to assure meeting mechanical requirements at the lowest permissible mass for the unit. A significant reduction in housing weight over that for Proto 1 (approximately a 9.5 pound reduction) was projected. With the exception of the tubular springs, the same materials as in Proto 1 were selected for Proto 2. For the springs, Almar 362 was selected as the preferred material. A gas spring regulator valve system similar to that for Proto 1 was also selected.

Controls

Experience with the Proto 1 testing was used in establishing Proto 2 control system design requirements. Design of the Proto 2 control system was initiated and suggestions made during the overall Proto 2 design review were incorporated. Semi-automatic operation of the Proto 2 systems test unit was specified, with fully automatic operation planned for the field test unit. GE "Weathertron" design concepts were utilized to the maximum extent practicable.

Air Handlers

Preliminary Proto 2 air handler designs were established for both the indoor and outdoor units based on Proto 1 test experience. A standard GE indoor unit was selected for Proto 2 (Model BWE936C100A0). This unit is planned for use in conjunction with an hydronic section to consist of a standard GE coil and coil enclosure.

A preliminary outdoor unit configuration was selected for Proto 2, incorporating improvements in the areas of size, noise, parasitic energy consumption, producibility, service and appearance. The overall design concept for the outdoor unit established an attractive and workable package suited to the initial field test plan.

Advanced Component and Materials Development

Assembly of an advanced combustor and extensive performance evaluation of this combustor was accomplished during the previous reporting period. Detailed results were recorded for use in Proto 2 combustor design. Operation of the Proto 2 combustor will be very similar but will be improved through a number of detailed hardware configuration changes.

Materials development was concentrated on bearing wear life assessment. As a result of this work, graphite filled polyimide bearing material was selected as the best candidate for continuing endurance tests. Work on the magnetic starter, second gas spring and improved regenerator was initiated and has been commented on in the appropriate subsystem area reports for the current period.

1.2 PROGRESS SUMMARY

Program effort during the seventh 6-month period of Phase II was concentrated on completion of the Proto 2 detail design, parts fabrication and procurement and the initiation of component tests. In addition, test facilities were modified and upgraded and field test criteria and site selection activities were initiated. Table 1-1 summarizes the major accomplishments during the January to June 1979 reporting period. Detailed descriptions of the program progress on each subsystem and the system design are presented in the following sections of this report.

Table 1-1. Subsystem Status

Subsystem	Status
Prototype 1 System	• Computer Simulation Codes Refined • Experimental Verifications of Proto 2 Component Designs
Prototype 2 System	• Operating Characteristics Updated • Seasonal Performance Projected • Annual Operating Cost Savings Forecast • Firing Rate Comparisons Completed • Engine-Matching Simulations Conducted
Combustor	• Detail Design Completed • Fabrication, Procurement, Assembly Completed • Testing Initiated
Engine	• Detail Design Completed • Fabrication and Procurement Initiated
Compressor	• Detail Design Completed • Fabrication and Procurement Initiated
Controls	• Detail Design Completed • Schematic Diagrams Prepared • Procurement and Assembly Initiated
Indoor Air Handler and Outdoor Unit	• Indoor Unit Design Completed • Refrigerant and Hydronic Loop Piping Design Initiated • Cabinet Concept Selected and Fabrication Initiated

SECTION 2

PROTOTYPE 2 DEVELOPMENT

SECTION 2
PROTOTYPE 2 DEVELOPMENT

2.1 INTRODUCTION

Having completed extensive Proto 1 testing and evaluation during the previous reporting period, principal product design efforts during the current period were directed at completion of subsystem designs for Proto 2. Fabrication and assembly of Proto 2 hardware was also commenced during this time.

Prior Proto 1 testing provided the basis for experimental evaluation of component designs for Proto 2. Major emphasis was placed on use of a second gas spring as a means of improving overall engine-compressor performance. Computer simulation codes were also updated for use in subsequent prediction of Proto 2 performance.

2.2 PRODUCT DESIGN

2.2.1 SUMMARY

Component selection was completed in the previous reporting period. Additional analyses addressing system level issues were conducted in this reporting period. Detailed HAHP operating characteristics were prepared and used for updating annual operating cost savings projections. Savings for Proto 2 compared to a gas furnace/air condition system are $73/ton, similar to previous predictions: greater savings are projected for the more developed hardware which would be offered in the final product. System performance simulation has been in good agreement with test data, and refinements in the computer programs are continuing to maintain the capability of this design tool and to support component and system testing.

2.2.2 SYSTEM PERFORMANCE AND OPERATING COST SAVINGS

The overall Seasonal Performance Factor (SPF), including parasitics, for the Proto 2 hardware is projected at 0.8 as compared to 0.63 for currently available gas furnace and air conditioner combinations. This corresponds to an annual operating cost saving of $73/ton

in 1980, with savings increasing as fuel prices increase. Greater savings are forecasted for the 1985 time frame for HAHP production hardware over comparably advanced conventional equipment.

System capacity and COP at the two firing rates is shown in Figures 2-1 and 2-2. System capacity is 35 kBtuh at 95°F ambient and 48 kBtuh at 2°F, with corresponding thermal COP's of 0.85 and 1.17 respectively. Anticipated production hardware performance is also shown on these figures. A more detailed tabulation of performance values is shown in Table 2-1, and detailed system schematics are shown in Figures 2-3 through 2-7.

Instantaneous performance was converted to yearly operating cost by taking into account the space conditioning load profile, cycling losses and fuel costs. The analyses were based on the following assumptions and projections:

1. Nominal 3-ton cooling load.
2. Load corresponds to average insulated 2000 ft^2 house.
3. Advanced HAHP performance, based on Proto 2 performance, upgraded to:
   a. 85% combustor efficiency
   b. 10% compressor/heat pump COP improvement
   c. 10% engine efficiency improvement (35% peak efficiency)
   d. 20% reduction in parasitics (900 watts total)
4. Conventional 1979 system efficiency based on GE high efficiency gas furnace and air conditioner models LU060C and BTN 936A-B at 1200 cfm (Figures 2-8 and 2-9).
5. Conventional air conditioner is assumed to have a 100 watt crankcase heater which is on year round, whereas, in the advanced conventional system, it is assumed on only in the summer (4 months).
6. 1985 advanced gas furnace/air conditioner performance (Figures 2-8 and 2-9) based on 1979 equipment performance, upgraded to:
   a. 20% higher COP at low speed, 10% higher COP at high speed

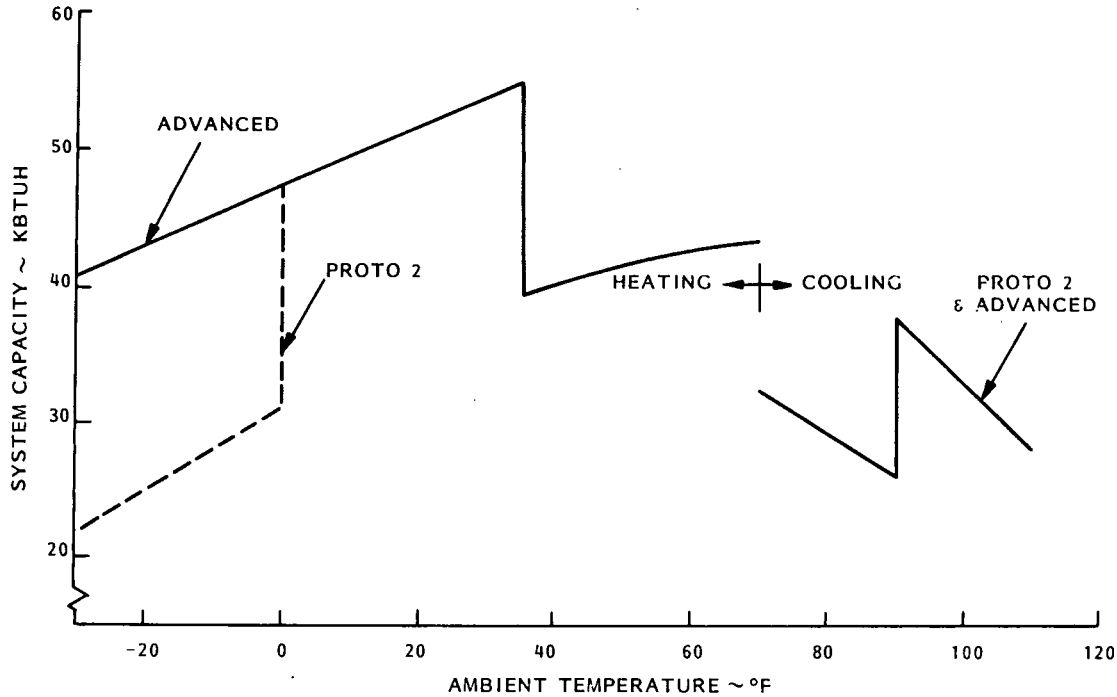

Figure 2-1. Proto 2 and Advanced Gas Fired Heat Pump Product Capacity

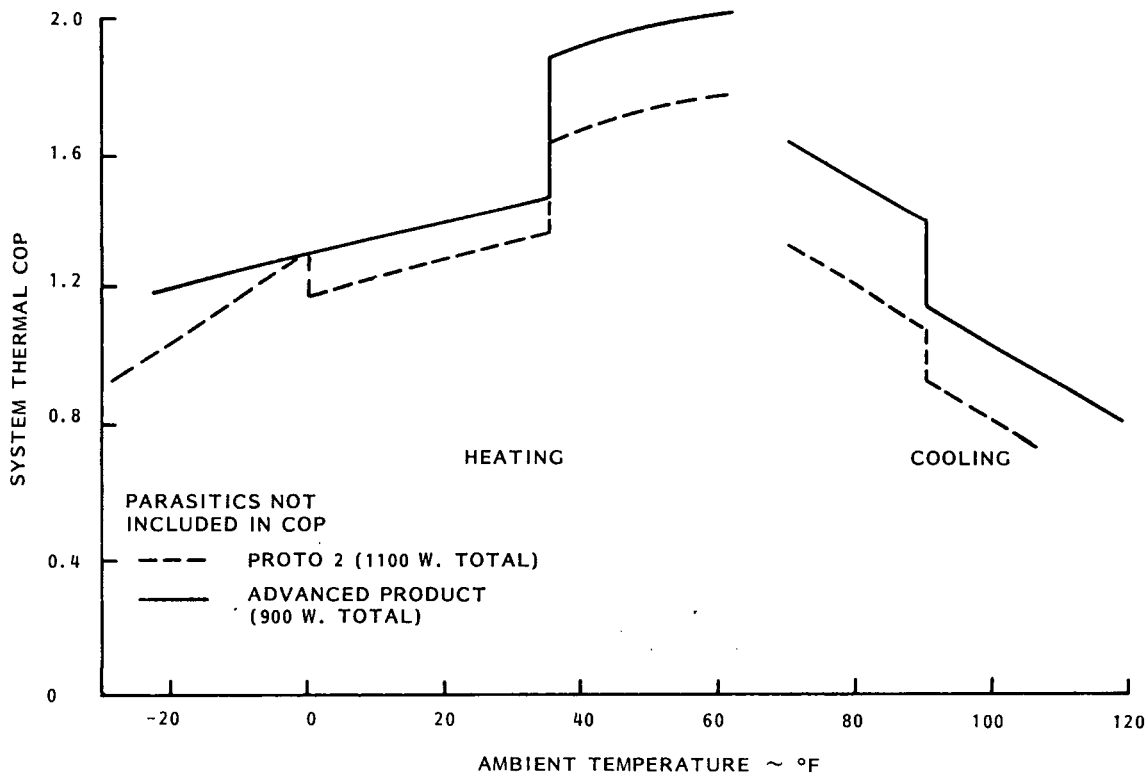

Figure 2-2. Proto 2 and Advanced Gas Fired Heat Pump Product COP

Table 2-1. Proto 2 System Performance

	COOLING			HEATING					
ROOM (°F DB/WB)	80/67			70/60					
AMBIENT (°F DB/WB)	105/83	95/75	80/64	62/56	47/43	32/26	17/15	2/0	-13/-14
SYSTEM									
COP (THERMAL) ①	.74	.85	1.19	1.76	1.69	1.32	1.24	1.17	1.12
CAPACITY (BTUH)	30300	35000	29000	42900	41200	54250	50950	47750	27200
HEAT PUMP									
COP	3.02	3.40	5.56	5.42	5.20	3.33	2.99	2.66	2.59
CAPACITY (BTUH)	31300	36000	30000	29200	27300	32500	29200	26000	13500
ENGINE									
POWER (KW)	3.04	3.10	1.58	1.58	1.54	2.86	2.86	2.86	1.58
EFFICIENCY	.31	.315	.27	.27	.26	.29	.29	.29	.27
REFRIGERANT FLOW RATE (LB/HR)	490	530	400	335	295	340	300	250	130
COMPRESSOR ISENTR. EFFIC.	.67	.69	.72	.74	.75	.67	.66	.62	.64
HEAT EXCHANGER									
COND. (BTUH)	43600	46900	34000	29200	27300	32500	29200	26000	13500
EVAP. (BTUH)	31300	36000	30000	23600	21300	23200	20000	16700	9000
HYDR. (BTUH)	20200	20200	12700	12700	12900	20750	20750	20750	12700
AVG. REFRIGER. TEMP.									
COND. (°F)	128	120	97	103	99	109	105	102	90
EVAP. (°F)	51	49	51	47	31	13	1	-12	-21
COMPRESSOR									
SUCTION PRESS. (PSIA)	93	88	95	91	69	47	36	28	23
PRESSURE RATIO (PSIA)	3.24	3.10	2.05	2.41	5.01	3.02	6.25	7.68	7.78
DISCHAR. PRESS. (PSIA)	303	273	195	219	208	236	225	215	179
COMBUSTOR									
FIRING RATE (BTUH)	41.0	41.0	24.4	24.4	24.4	41.0	41.0	41.0	24.4
EFFICIENCY	.82	.82	.82	.82	.82	.82	.82	.82	.82

① PARASITICS = 1100 W. TOTAL NOT INCLUDED

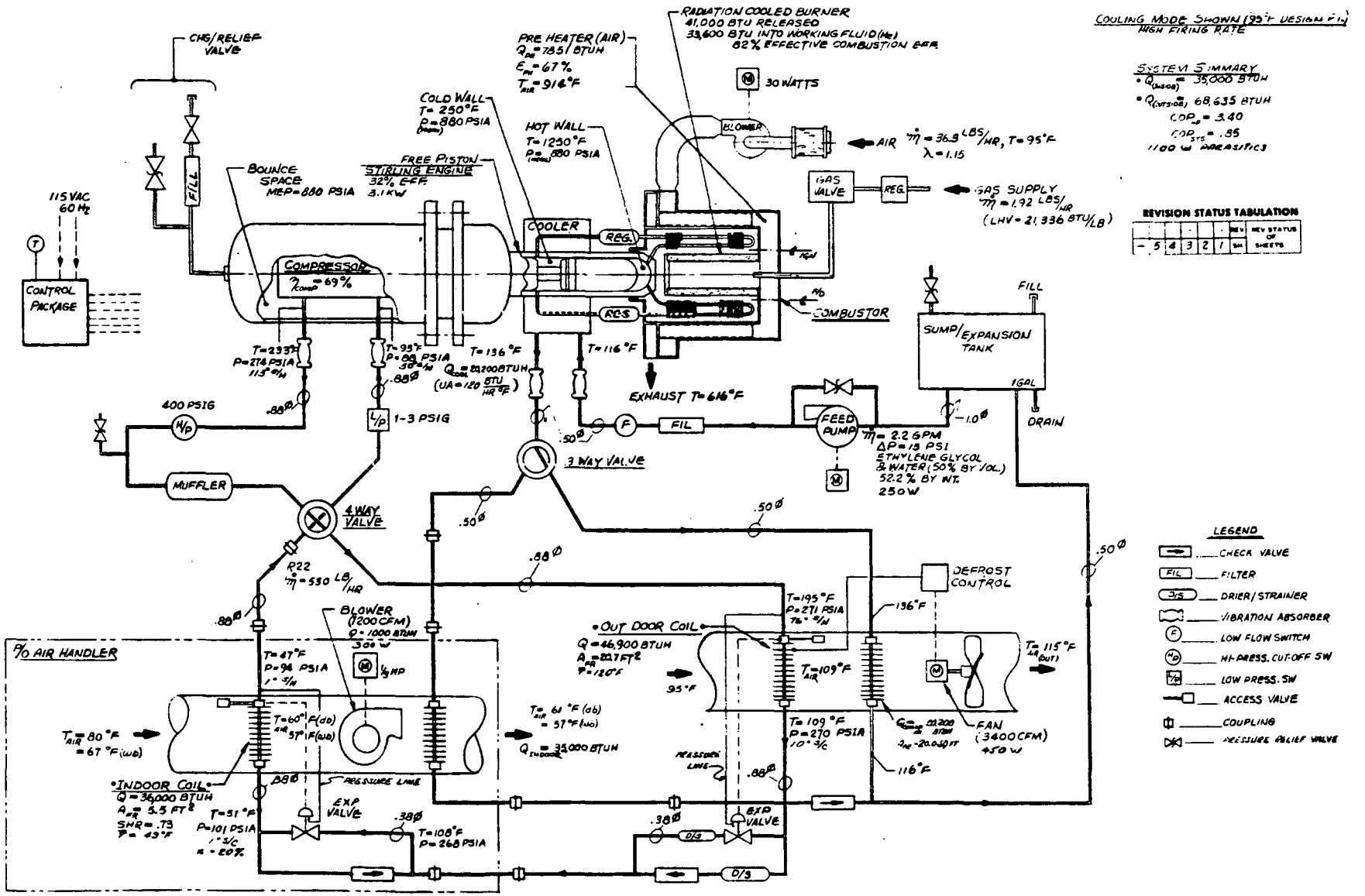

Figure 2-3. HAHP System Operating Schematic, 95°F Ambient Day

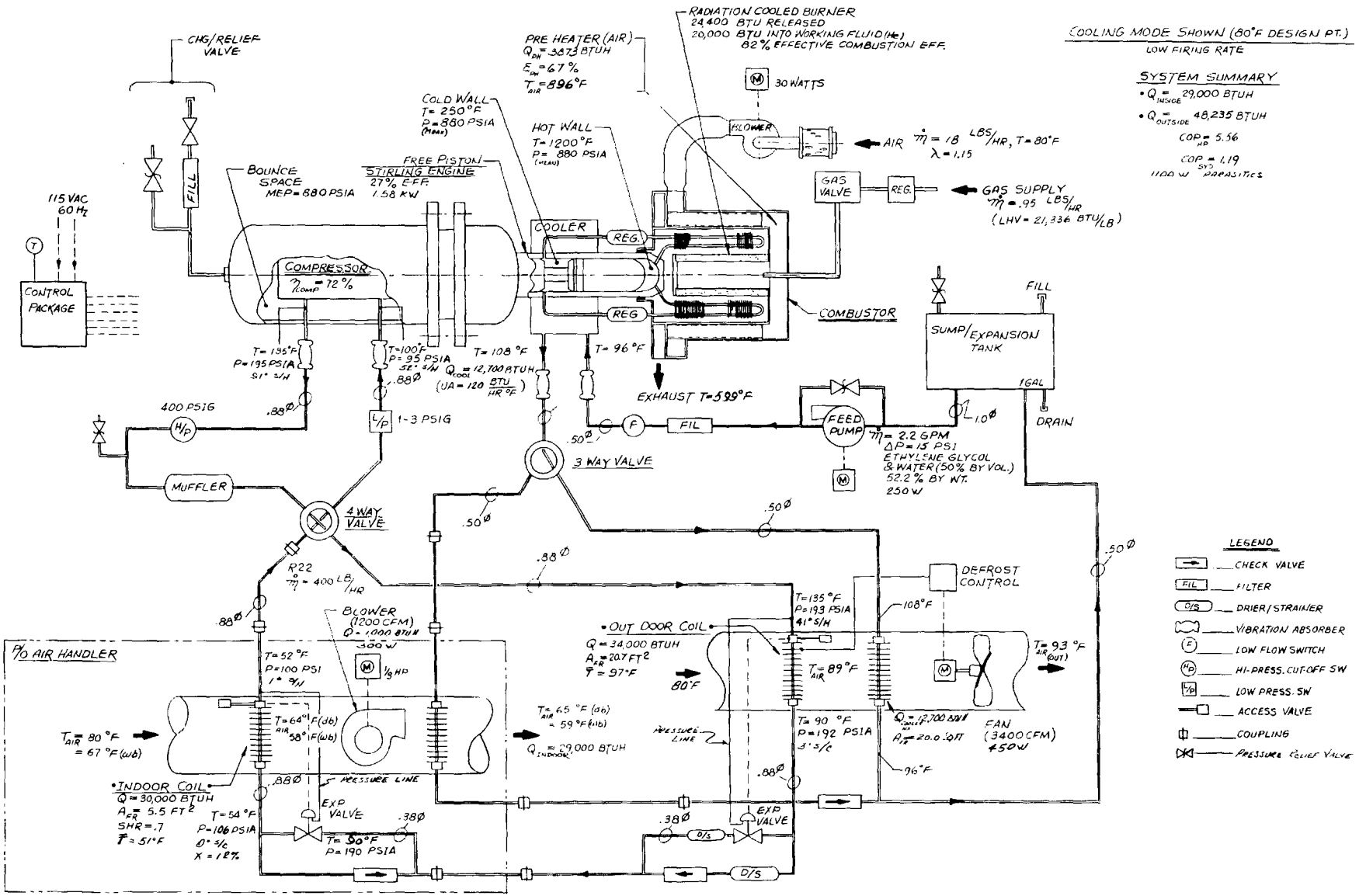

Figure 2-4. HAHP System Operating Schematic, 80°F Ambient Day

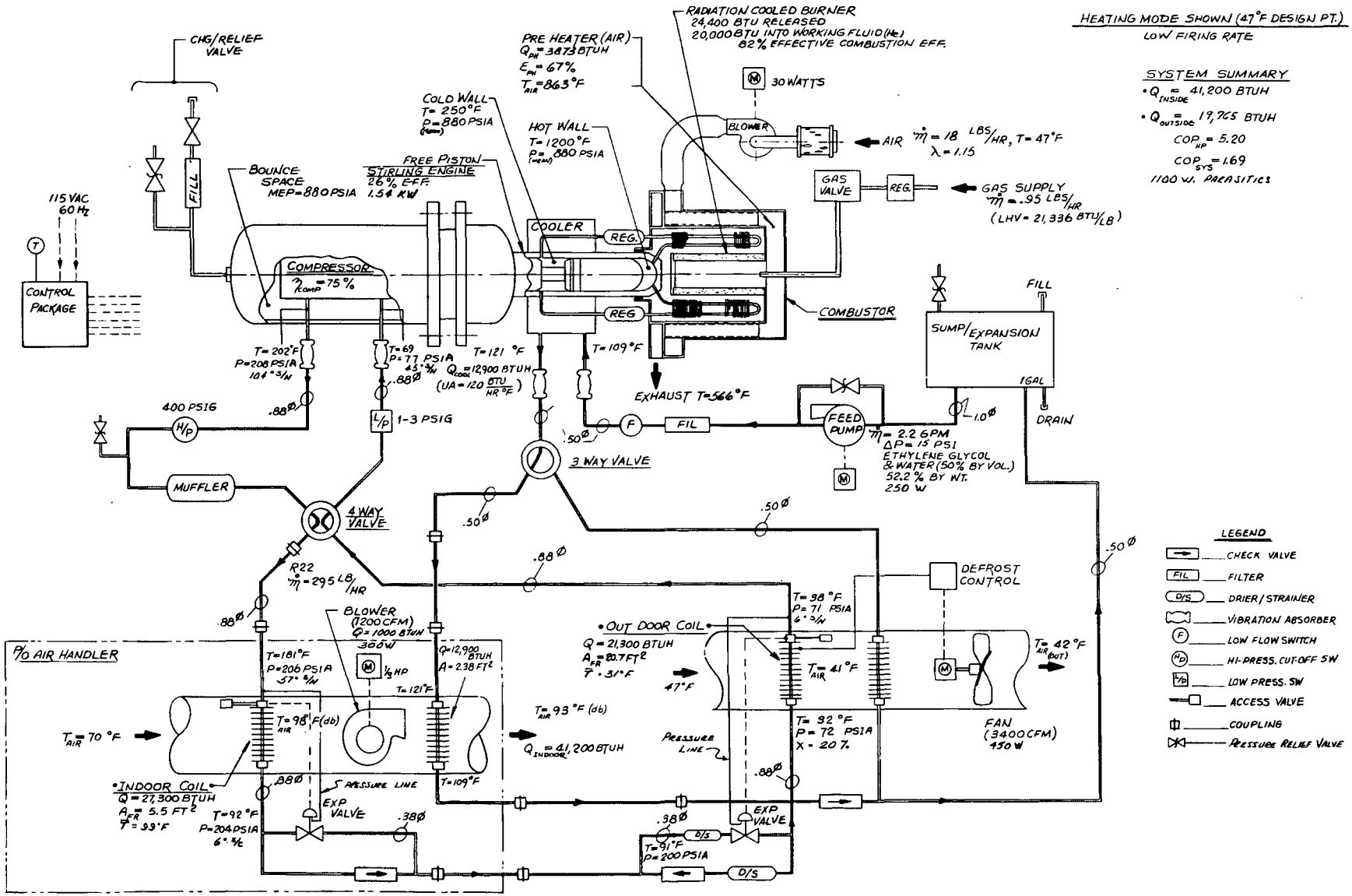

Figure 2-5. HAHP System Operating Schematic, 47°F Ambient Day

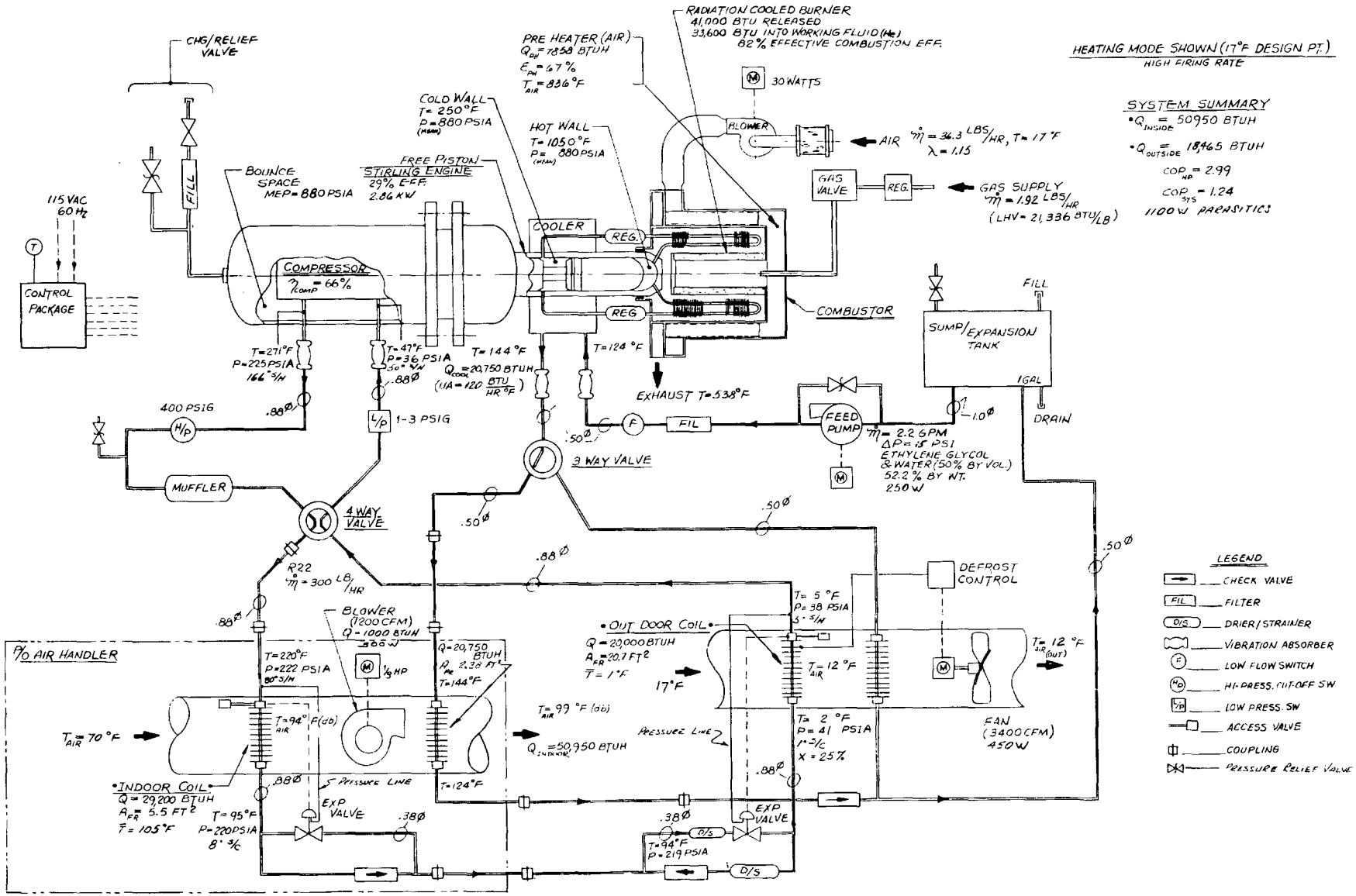

Figure 2-6. HAHP System Operating Schematic, 17°F Ambient Day

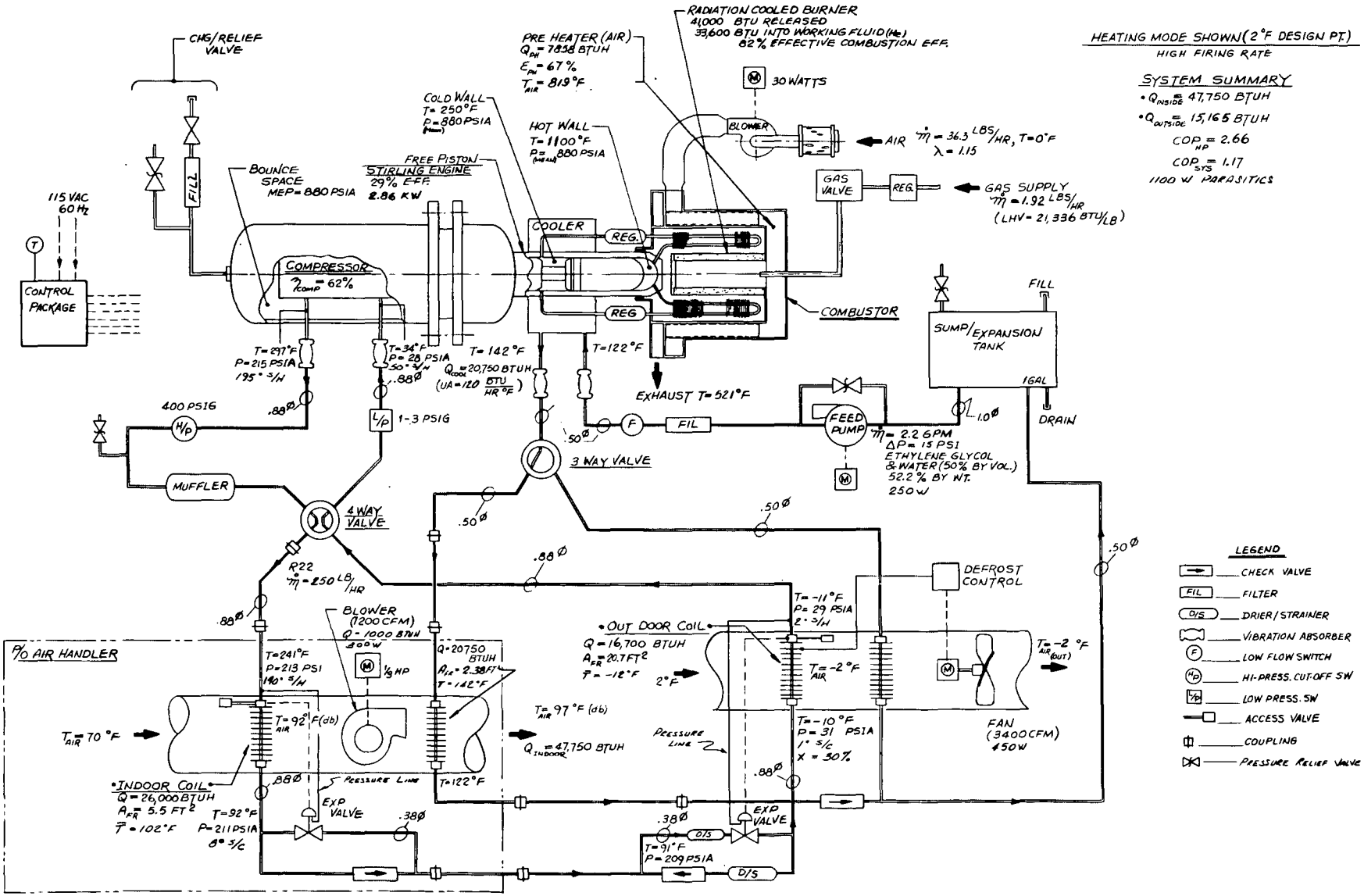

Figure 2-7. HAHP System Operating Schematic, 2°F Ambient Day

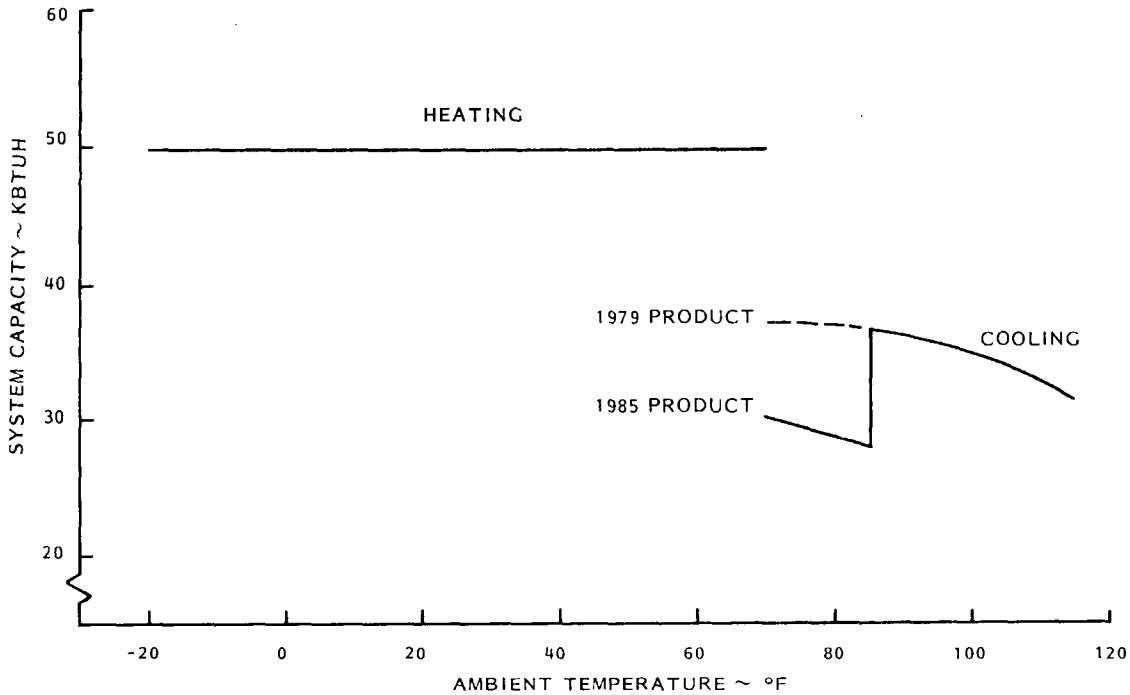

Figure 2-8. Conventional Gas Furnace and Air Conditioner Capacity

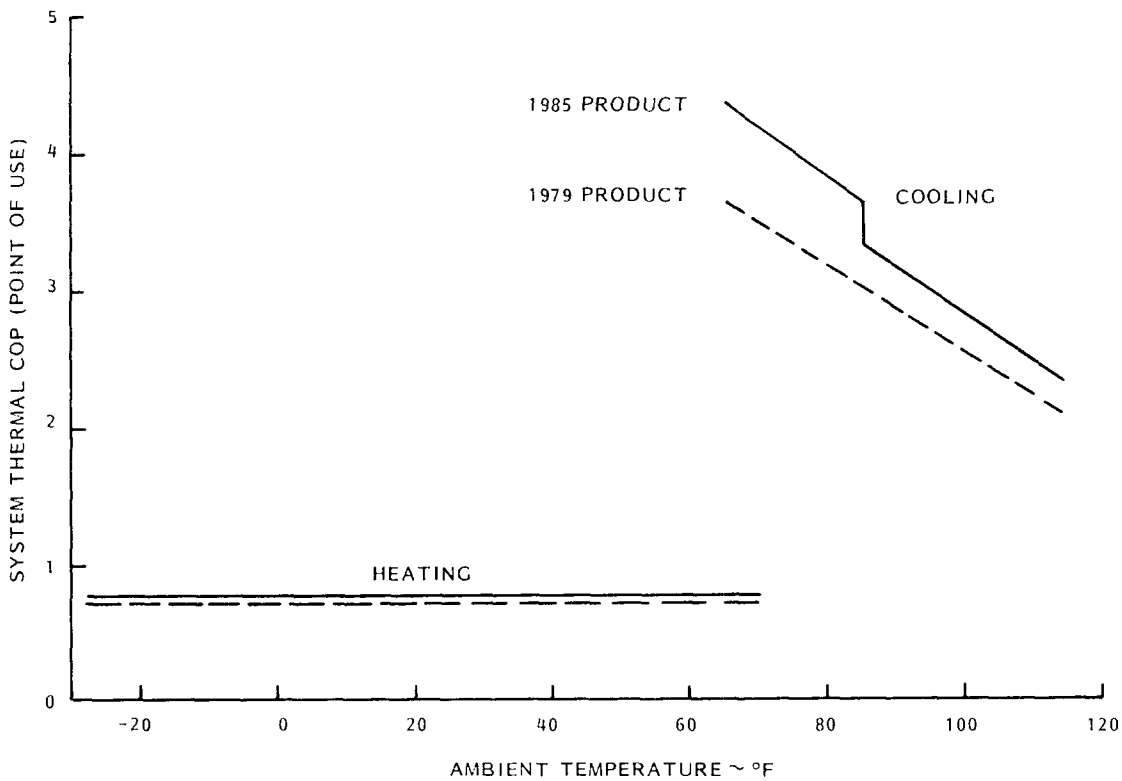

Figure 2-9. Conventional Gas Furnace and Air Conditioner COP

b. Two speed air conditioner for reduced cycling losses

c. 40% reduction in indoor blower power

d. 7% improvement in combustion efficiency

e. Crankcase heater controlled by ambient temperature

7. Overall SPF includes parasitics

8. Electrical conversion efficiency of 0.30

9. The following fuel costs were used:

	1980 ELECTRICITY RATE (¢/KHW)		1980 Gas
	Summer	Winter	Cost (¢/Therm)
Philadelphia	6.63	5.56	36.3
Atlanta	5.18	3.44	28.9
Boston	5.90	4.25	41.7

10. Baseline escalation rates above inflation are 3% for electricity and 4% for gas.

Operating characteristics for the Proto 2, conventional HVAC equipment and advanced products are shown in Tables 2-2 and 2-3. Savings in Atlanta, Philadelphia and Boston are 27, 25, and 29% of total conventional operating cost respectively. Proto 2 performance and all costs are shown in 1979 dollars. Similar results for 1985 equipment are shown in Table 2-3

Fuel prices can vary within any one climate region and future projections are uncertain. To evaluate sensitivity to fuel costs, a breakdown of operating cost savings was made by fuel type (Table 2-4). This shows that in going from south to north, electricity savings decrease continuously, but gas savings increase continuously. The overall effect is increased total savings in going south to north. If electricity escalation is higher than gas,

Table 2-2. Proto 2 vs. 1980 Gas Furnace/Electric A/C

		OVERALL SPF ①			FUEL CONSUMPTION						1980 ② OPERATING COST			1980 ② ANNUAL SAVINGS
					GAS (MCF)			ELECTRICITY (KWH)						
		COOL	HEAT	ANNUAL	COOL	HEAT	TOTAL	COOL	HEAT	TOTAL	COOL	HEAT	ANNUAL	
PHILA PA	HAHP	.688	.823	.782	36	89	125	1216	2217	3433	211	448	659	$221
	PROTO 2A	-	-	-	-	-	-	-	-	-	-	-	-	
	GAS FURNACE VAPOR COMP. A.C.	.652	.622	.63	0	148	148	4382	910	5292	291	589	880	
ATLANTA GA	HAHP	.683	.854	.765	55	52	107	1825	1445	3270	253	201	454	$166
	PROTO 2A	-	-	-	-	-	-	-	-	-	-	-	-	
	GAS FURNACE VAPOR COMP. A.C.	.693	.600	.640	0	0	96	6211	572	6783	322	298	620	
BOSTON MA	HAHP	.716	.851	.823	24	98	122	835	2507	3342	147	519	666	$270
	PROTO 2A	-	-	-	-	-	-	-	-	-	-	-	-	
	GAS FURNACE VAPOR COMP. A.C.	.611	.658	.625	0	170	170	3225	875	4100	190	746	936	

① 30% ELECTRIC CONVERSION EFFICIENCY

② 1979 $

Table 2-3. Advanced HAHP vs. 1985 Gas Furnace/Electric A/C

		OVERALL SPF ①			FUEL CONSUMPTION						1985 ② OPERATING COST			1985 ② ANNUAL SAVINGS
					GAS (MCF)			ELECTRICITY (KWH)						
		COOL	HEAT	ANNUAL	COOL	HEAT	ANNUAL	COOL	HEAT	ANNUAL	COOL	HEAT	ANNUAL	
PHILA PA	HAHP	.867	.977	.945	28	76	104	986	1798	2784	201	452	653	
	ADV.	-	-	-	-	-	-	-	-	-	-	-	-	$242
	GAS FURNACE VAPOR COMP. AC	.888	.675	.72	0	138	138	3216	543	3759	248	647	895	
ATLANTA GA	HAHP	.861	1.024	.941	43	44	87	1480	1172	2652	240	202	443	
	ADV.	-	-	-	-	-	-	-	-	-	-	-	-	$181
	GAS FURNACE VAPOR COMP. AC	.885	.651	.742	0	90	90	4866	340	5206	294	330	624	
BOSTON MA	HAHP	.902	1.006	.986	18	85	103	677	2033	2710	140	529	669	
	ADV.	-	-	-	-	-	-	-	-	-	-	-	-	$318
	GAS FURNACE VAPOR COMP. AC	.862	.680	.706	0	159	159	2289	519	2808	157	830	987	

① 30% ELECTRIC CONVERSION EFFICIENCY

② 1979 $

Table 2-4. Annual Operating Cost Savings by Fuel Type

	Proto 2 vs. NEP		ADV HAHP vs. NEP	
	1980		1985	
	Electricity	Gas	Electricity	Gas
Philadelphia	$137	84	$201	41
Atlanta	$197	-32	$171	10
Boston	$ 72	199	$ 16	302

total savings will increase most rapidly in Atlanta, then Philadelphia, and least in Boston. The reverse trend is expected if gas escalation is higher than electricity.

2.2.3 COMPONENT SELECTION

Most of the Proto 2 hardware design was completed in the previous reporting period. However, design requirements were established in this period for compressor gas spring regulation and the firing rate schedule, and compressor overstroke performance impact was assessed. Engine components were also rematched after improvements to the simulation code were made.

Compressor Gas Spring Regulation

Analysis of Proto 2 performance indicates the advantage of a compressor gas spring regulator to avoid excessive engine heater tube temperatures in the heating season, although this will not significantly impact the projected operating costs.

Compressor characteristics affect engine performance because of the dynamic link between engine and compressor motion. An important characteristic of the compressor is the gas spring stiffness, which is determined by refrigerant conditions. If unregulated, the stiffness decreases with a decrease in ambient air temperature. This can cause engine heater tubes to over-temperature under some conditions. Figure 2-10 shows predicted engine

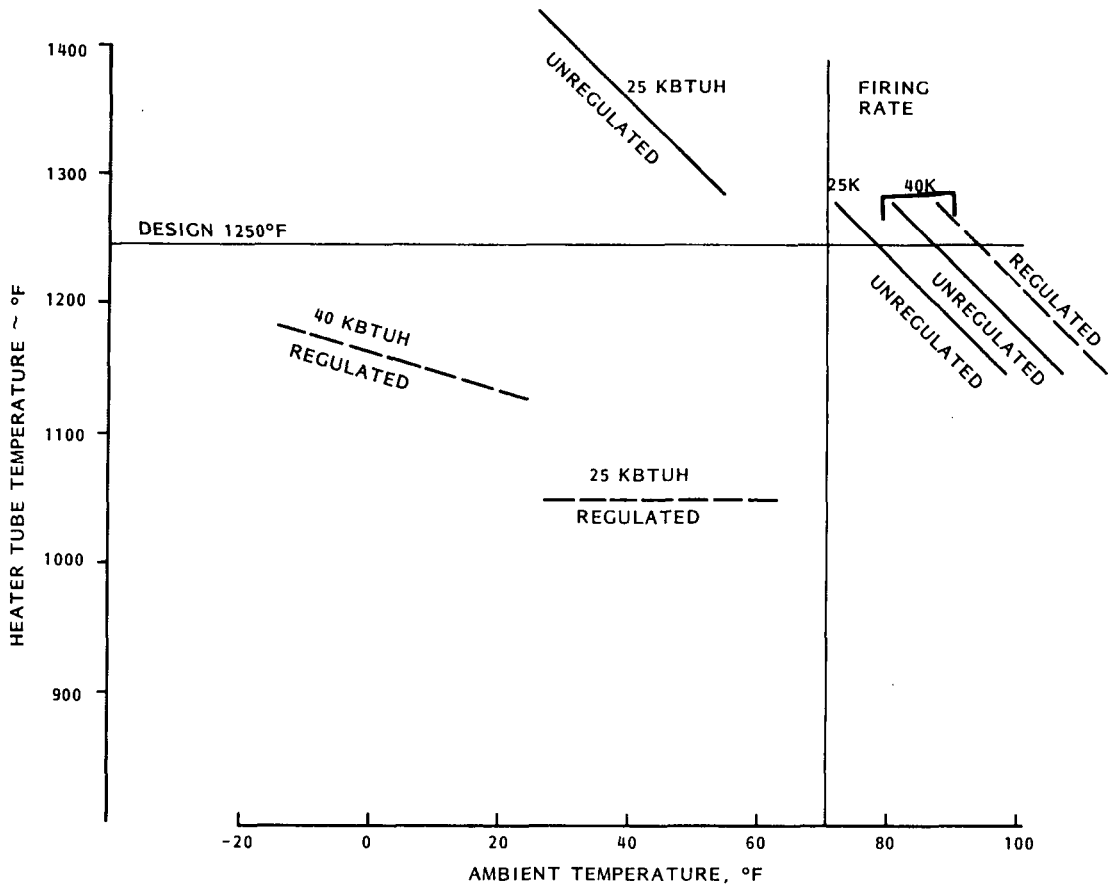

Figure 2-10. Proto 2 Engine Heater Tube Temperature

heater tube temperature for various ambient temperatures, with and without pressure regulation. In the cooling season (above 70° ambient), there is very little difference between regulated and non-regulated operation, and the design tube temperature may be exceeded at both low and high firing rates. However, switching from the high firing rate to the low firing rate at about 90°F alleviates this problem. In the heating mode, the tubes over-temperature without regulation for most ambient temperatures at both high and low firing rates.

The cause of heater tube overheat is the inability of the engine to absorb the heat input as a result of reduced operating frequency and/or stroke. Reduced stroke is particularly noted at low firing rates. The engine heater tube temperature may be optimized by lowering the regulated compressor gas spring pressure until the heater tube temperature reaches the design temperature. The compressor stroke, however, will increase and may narrow the ambient temperature operating range of the engine/compressor. These effects depend on the specific hardware configuration and will be investigated as part of the testing program.

Stepped Firing Rate

Using the system performance models, a comparison of one versus two firing rates was made. The following assumptions were made in the single firing rate model:

1. High firing rate only.
2. System capacity and COP were obtained by linearly extrapolating high firing rate performance to moderate ambient temperatures.
3. Physical constraints, such as heater tube temperature limit and piston stroke limits were neglected.
4. Parasitics and cycling losses were those projected in the Proto 2 model.

Table 2-5 shows the difference in operating cost at three typical locations. The annual operating cost advantage of dual firing rates is between $23 and $34 per year, which corresponds to 10 to 14% of the HAHP operating cost savings relative to the nearest equivalent product. This difference is due to the impact of firing rate on basic COP, parasitic consumption and cycling losses. Thus, in addition to minimizing operating limitations, the dual firing rate control improves energy savings and operating costs.

Table 2-5. Single Versus Dual Firing Rate Operating Cost Comparison

Impact of Firing Rate on Operating Cost ①				
City	Operating Cost, $ Dual Firing Rate	Operating Cost, $ One Firing Rate	Δ$	% Increase In Savings
Philadelphia	658.8	681.7	22.9	10
Atlanta	454.5	478.4	23.9	14
Boston	665.6	700.0	34.4	13

① 1980 Projected Fuel Prices, $ 1979

Compressor Piston Overstroke Impact

At low ambient temperatures, compressor piston overstroke may occur in the Proto 2 unit. Analyses indicates overstroke at 10°F and below at the design point firing rate of 41 kBtuh. Several methods of alleviating this operational problem were evaluated:

1. Increasing the compressor gas spring reference pressure relieves overstroke but results in excessive peak pressures.

2. The compressor gas spring reference volumes can be biased to control compressor piston operation, but it is unlikely that this approach would extend the operating range significantly.

3. The comperssor can be redesigned for a longer maximum stroke. This change could introduce performance penalties at higher ambient temperatures. For example, if the compressor piston stroke limit were increased to 3.0 inches instead of 2.5 inches, the 95°F design point isentropic efficiency would decrease about 4%.

4. The combustor firing rate could be reduced at low ambient temperatures to decrease the engine power piston stroke. This approach also allows the most flexibility with respect to tuning the system for optimum performance. The lower the firing rate, the greater the extension of the operating range, but at reduced capacity. The major drawbacks of this method are the increased control complexity and the additional hardware costs.

The HAHP will have supplementary heating capacity in the form of a small, compact gas burner, integrated within the outdoor unit. The capacity of this unit will be tailored to the climatic region, to satisfy the building load at very low ambient temperatures (similar in approach to an electric heat pump). With a supplemental heating capacity, the selection of a switchover point from heat pump operation to supplementary heating operation may eliminate the overstroke problem.

An analysis was performed to determine the effect on annual operating savings of a cut-off ambient temperature below which the engine would be turned off and only auxiliary heat would be used, assuming no overstroke condition is encountered. Heating loads for Philadelphia and Minneapolis were examined. For Philadelphia, the average minimum ambient temperature is 5°F, and if there were no overstroke problem, the HAHP capacity would be sufficient to satisfy the load at the 41 kBtuh firing rate. Therefore, no auxiliary heat is required as long as the HAHP is operating. For the Minneapolis model, the average

minimum ambient is -30°F and auxiliary heat is required below 0°F to meet the load. For both cities, the auxiliary system was assumed to operate on natural gas with an estimated efficienty of 75% and 500 watts parasitic power. The auxiliary capacity was assumed to be 40 kBtuh for Philadelphia and 60 kBtuh for Minneapolis, both with and without the HAHP operating.

The results of the performance/cost analysis are shown in Figure 2-11. The difference in savings is referenced to the annual energy costs for the HAHP assuming full ambient range operation. For Philadelphia, a 10°F cut-off temperature for Proto 2 has no effect on savings. However, for Minneapolis, the effect is significant, and a cut-off below 0°F is required for minimal loss in savings.

In addition to energy cost considerations, performance requirements must be considered. Standards for a HAHP type product are in an evolutionary phase, and no standard has yet been adopted by ASHRAE or ARI. However good engineering practice dictates that there shall be design point capacity down to the lowest ambient temperature possible at the site. For electric heat pumps, the low temperature heating ARI standard is 17°F. Electric heat pump systems also require full capacity auxiliary heaters since electric heat pump capacities are very low at low ambient temperatures. Integrated and system testing results will be used to select the final cut-off point for the Proto 2 demonstration unit. Future compressor designs will minimize the potential effect of overstroke limits.

Updated Engine Matching

Proto 2 performance was checked using the TDP simulation computer program with an improved friction loss factor estimated for the Proto 2 configuration. The results indicated lower than required power output, as a result of engine/compressor mismatch. A number of different modifications were evaluated to improve matching. A change in the displacer configuration was recommened to provide proper matching and achieve 3 kW output. The change has minimal impact on the hardware. Simulation results are shown in Table 2-6 for the original Proto 2 predictions (with a low friction factor), for the same displacer configuration with the updated friction factor, and for a new displacer configuration with the

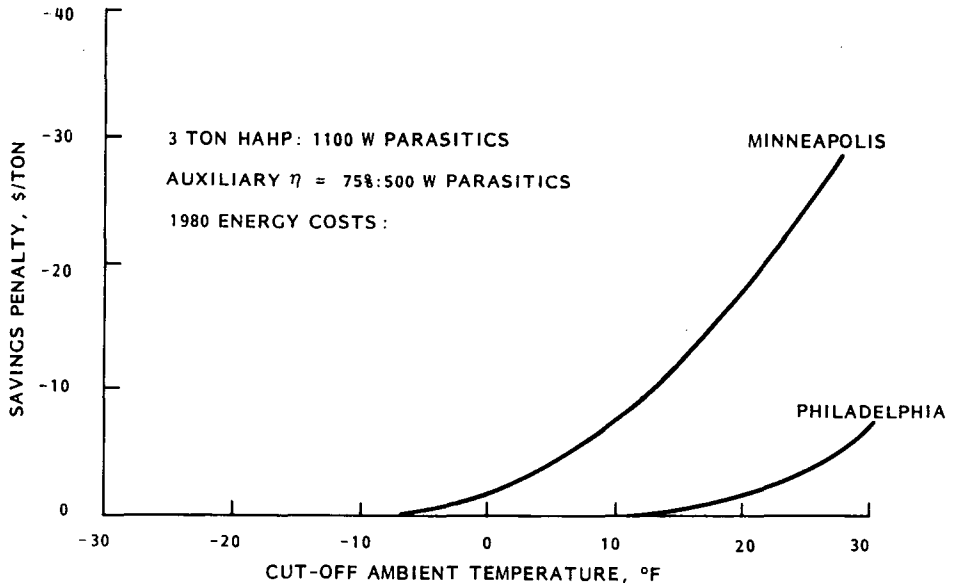

Figure 2-11. Savings Penalty Using Only Auxiliary Heat Below Cut-Off Temperature

Table 2-6. Proto 2 Predicted Performance

	Initial Projection	Updated Projection	Modified Proto 2 Projection
Engine Stroke, IN.	1.36	1.26	1.34
Displacer Stroke, IN.	1.97	1.69	1.92
Operating Frequency, HZ	29.2	28.9	28.9
Heat Into Engine, KBTUH	34.5	26.0	31.9
Heat Rejected from Engine, KBTUH	23.0	16.4	20.6
Engine Power, KW	3.8	2.8	3.4
Displacer Configuration			
Rod Area (IN.^{2})	1.2	1.2	1.3
Gas Spring Vol. (IN.^{3})	7.16	7.16	8.40

updated friction factor. Three displacer configurations have been specified to bracket the calculated optimum configuration of 1.3 in.^{2} displacer rod area, as shown in Table 2-7. The corresponding performance region calculated is shown in Figure 2-12.

Table 2-7. Proto 2 Displacer Rod Size Options

Displacer	Rod Bearing Bore Size	
	I. D. (IN.)	Area (IN.^{2})
G-1	1.375	1.485
G-2	1.312	1.352
G-3	1.250	1.227

Component and System Modeling

The Thermodynamic Computer Program (TDP) is used extensively for engine design, interpretation of test results, and performance calculations. This code simulates the complex dynamic/thermodynamic processes that occur in the free piston Stirling engine. Good agreement was obtained by TDP with Proto 1 test data, as shown in Figure 2-13. Table 2-8 shows the key Proto 1 test parameters in the first column, then simulation results with an updated friction factor that matches the data well, and in the last column, simulation results with a low friction factor as initially estimated. The "friction factor" in itself does not preclude good engine performance, but it does impact component matching in the engine.

When the Proto 1 hardware was retrofitted with an experimental second gas spring, the model was modified to reflect leakage and damping effects of the retrofit hardware. Calculations were carried out to simulate the test run with the second gas spring, while the second gas spring bypass lines were opened. (A complete description of these tests is given in Section 2.8). Figure 2-14 compares the pressure history of the second gas spring for the test data and for the simulation. As shown, the agreement is acceptable, indicating the model is capable of simulating actual operating conditions of the unit with the second gas spring.

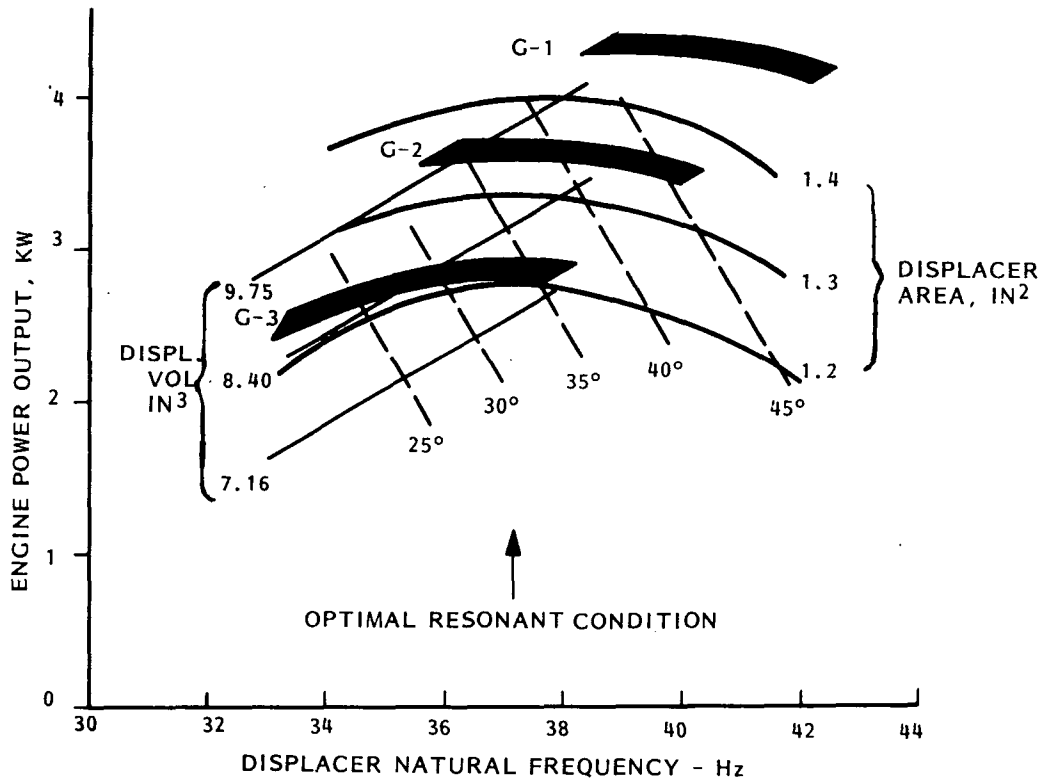

Figure 2-12. Proto 2 Displacer Configuration Map

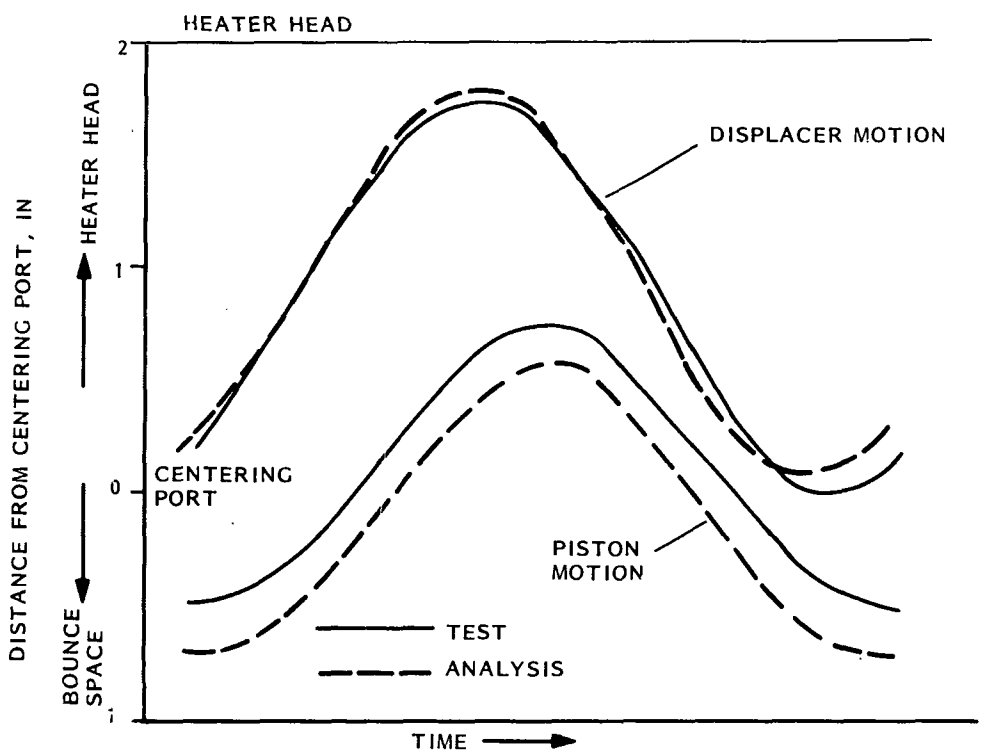

Figure 2-13. Proto 1 Simulation Results Compared to Test

Table 2-8. Proto 1 Computer Simulation Results

	Proto 1 Test Data 8-29-78 13:30	Proto 1 Simulations	
		Updated Friction Factor	Low Friction Factor
Piston Stroke, IN.	1.26	1.29	1.32
Displacer Stroke, IN.	1.78	1.77	2.00
Operating Freq., HZ	21.5	22.5	23.7
Firing Rate, KBTUH	33.9	39.6	54
Power Output, KW	2.4	2.2	3.4
Heater Tube Temp., ^{o}F	1173	1173	1173

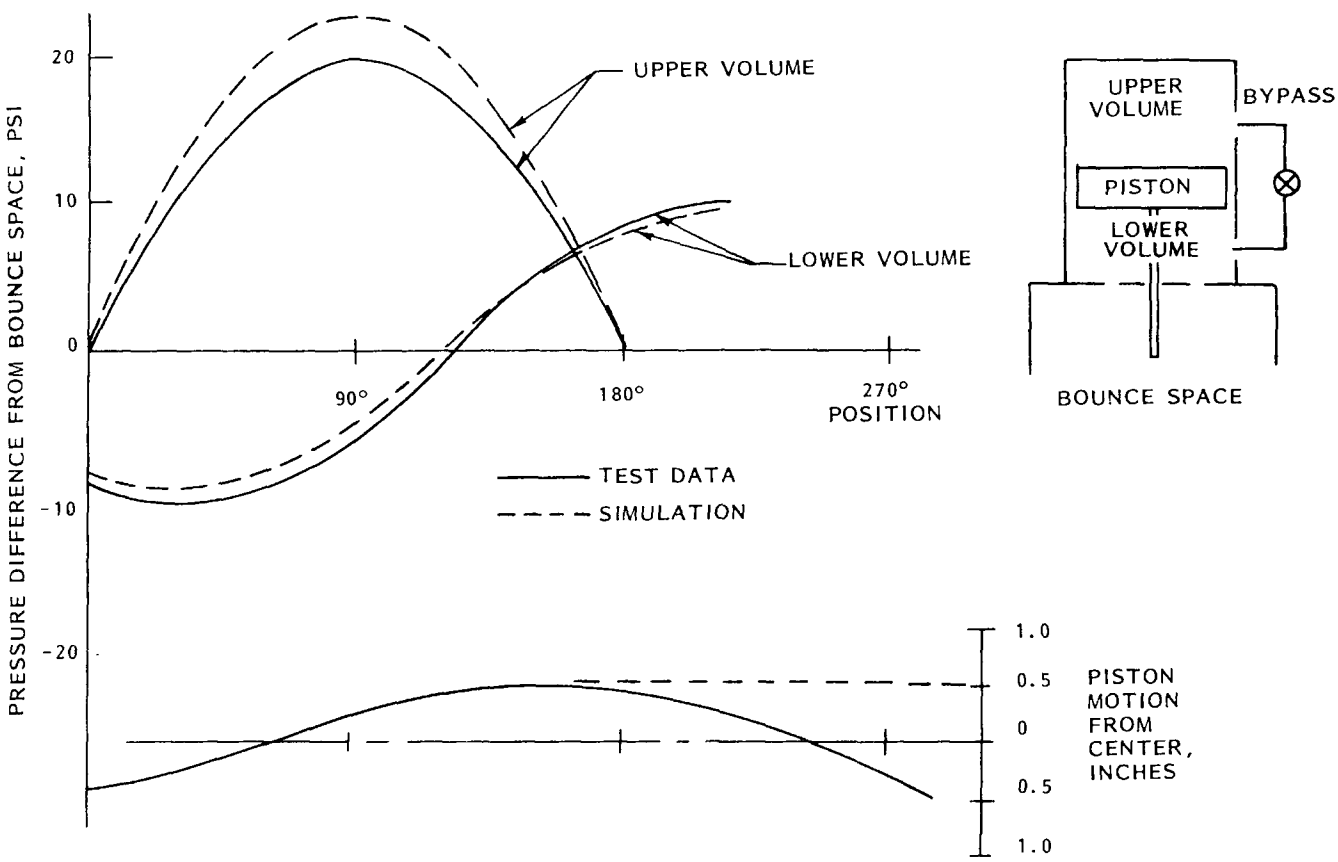

Figure 2-14. Proto 1 Second Gas Spring Pressure and Displacement History

To better understand effects of the friction factor and to refine the capability of this design tool, a number of modifications are being made to the model. These will improve modeling of regenerator wall heat transfer, displacer shuttling losses and cylinder housing heat conduction. These improvements will be completed early in the next reporting period and will be checked against test data.

Part of the TDP program consists of the compressor simulation code which models the free piston inertia compressor operation for set input conditions of stroke, frequency, suction pressure and temperature and discharge pressure. The model describes the mass flows, power, efficiency, losses, operating pressures and motion of the compressor piston for a particular compressor configuration and engine input motion. There is flexibility in the program to model compressors of various strokes and piston diameters. Several modifications are being evaluated to improve the flexibility and accuracy of the program, including improved mass flow calculations, valve dynamics, heat transfer effects and leakage.

2.2.4 PLANNED ACTIVITY FOR NEXT PERIOD

During the next reporting period, the following prototype development and product design activities are planned:

1. Computer simulation code improvements necessary for subsequent engine testing.
2. Updating of Proto 2 performance predictions versus design goals.
3. Projection of fuel price scenarios based on latest available trend information.
4. Market assessment projections using refined HAHP and nearest equivalent product performance estimates and the latest fuel price scenarios.

2.3 COMBUSTOR

2.3.1 SUMMARY

Detailed design, fabrication, procurement and assembly of the Proto 2 combustor were completed during this reporting period. Combustor check out and testing operations were also initiated. Activity related to auxiliary combustor hardware (combustor/engine exhaust seal, two stage gas valve, and blower) was also conducted during this period.

The Proto 2 combustor design is based on the Proto 1 combustor and an advanced combustor configuration. Adaptations to the advanced combustor design were incorporated to improve Proto 2 combustor efficiency, component reliability and life. Detailed discussions of the previous designs are contained in previous semi-annual reports.

2.3.2 DESIGN REQUIREMENTS

The Proto 2 combustor design requirements are summarized in Table 2-9.

Table 2-9. Proto 2 Combustor Design Requirements

Ratings:	$T_{amb} > 85^{o}F$	41 KBTUH
	T_{amb} $30^{o}F$ - $85^{o}F$	24.4 KBTUH
	$T_{amb} < 30^{o}F$	41 KBTUH
Efficiency (LHV)		82%
CO Emissions @ 15% Excess Air		0.04%
Combustor Pressure Drop		<2 IN. H_2O
Heater Head Heat Exchanger Effectiveness		92%
Pre-Heater Effectiveness		60%

These design requirements are the same as those established for Proto 1 combustor except:

1. Combustor efficiency has been increased from 80 to 82%
2. A two-stage firing schedule is required for Proto 2

These increased Proto 2 combustor requirements have been established to meet HAHP system COP goals.

2.3.3 COMBUSTOR DESIGN DESCRIPTION

A drawing of the Proto 2 combustor is shown in Figure 2-15. Incoming combustion air enters the inlet duct and is distributed circumferentially by the inlet vane before it travels in an axial direction along the outer section of the corrugated air preheater to the mixing chamber. Natural gas is distributed in the mixing chamber through a 0.010 inch gap in the diffuser ring. The air-gas mixture flows through a restricted cross sectional area (created by spacer gaps) and swirler into a transpiration burner element of cylindrical construction. The element consists of chopped, pressed and sintered Hoskins 875, 5.6 mil diameter wire with 80% porosity. Combustion occurs about 1 mm. from the outer surface of the burner element. An electronic spark ignition initiates combustion while a flame detector circuit senses the presence of a flame and a viewport allows visual observation of the burner element/combustion process.

Radiation shields promote greater heat transfer to the FPSE heater head. Exhaust gases exit the combustion chamber along the inside diameter of the corrugated air preheater in an axial direction opposite to that of the inlet air. Increased combustor efficiency is obtained from inlet air preheating which results in a reduction of the exhaust gas temperature level. The engine/combustor exhaust seal prevents loss of hot exhaust gases from the combustion chamber while at the same time allowing for relative reciprocating motion between the engine heater head and combustor. A one-inch thick layer of Kaowool insulation reduces convective heat losses from the outer surfaces of the combustor to the surrounding environment. An anodized aluminum can protects the unit from adverse environmental conditions. Photographs of Proto 2 combustor hardware are shown in Figures 2-16 through 2-21. The Proto 2 material selections are summarized in Table 2-10.

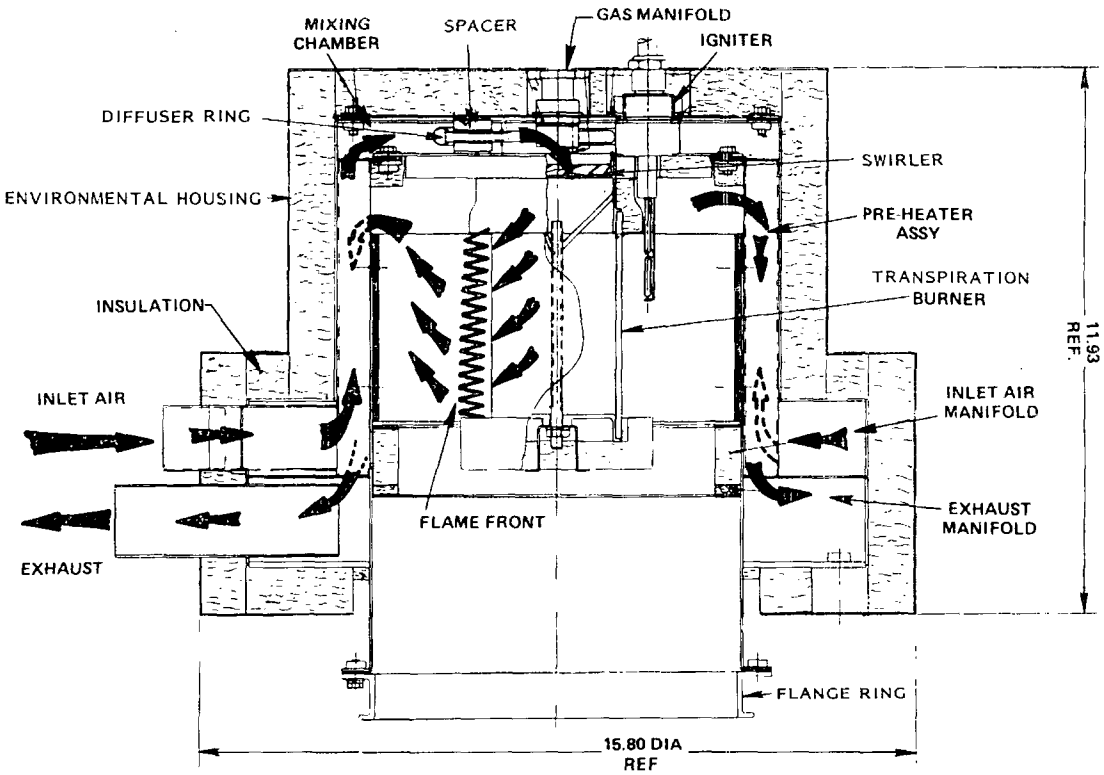

Figure 2-15. Proto 2 Combustor Assembly

Table 2-10. Proto 2 Material Selections

Inlet Manifold	316L Stainless steel
Exhaust Manifold	316L Stainless steel
Housing	316L Stainless steel
Cover	316L Stainless steel
Heat Shield	347 Stainless steel
Radiation Shields	310/316L Stainless steel
Diffuser and Spacers	304L Stainless steel
Burner Support	347 Stainless steel
Burner Element	Hoskins 875, 80% porosity, 0.0056 inch dia. wire
Swirler	347 Stainless steel
Gaskets	Felted asbestos sheet packing
Insulation	Kaowool
Flame Detector	Kanthal
Igniter	Kanthal
Engine/Combustor Seal	Graphite impregnated PTFE

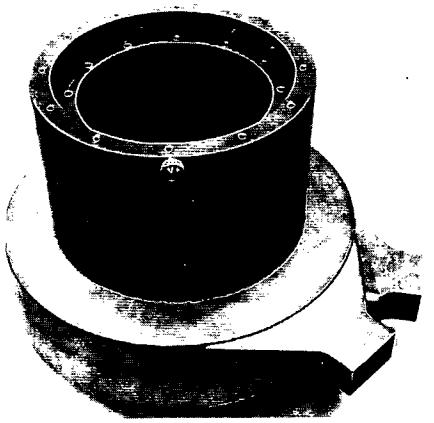

Figure 2-16. Combustor Housing and Preheater Section

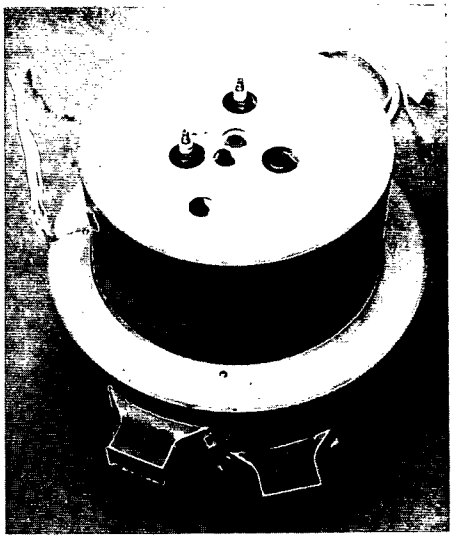

Figure 2-17. Assembled Combustor - Bottom View with Igniters in Place

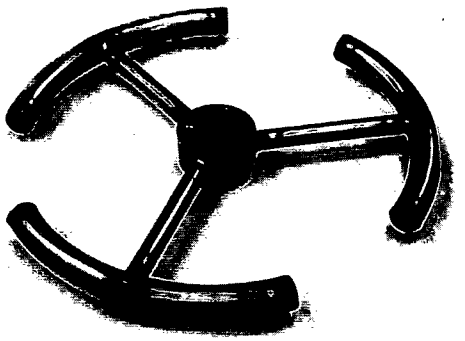

Figure 2-18. Diffuser Ring

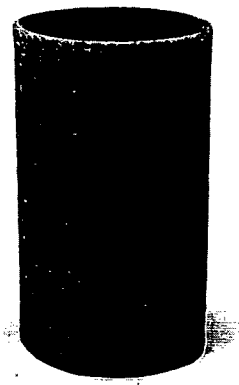

Figure 2-19. Burner Element

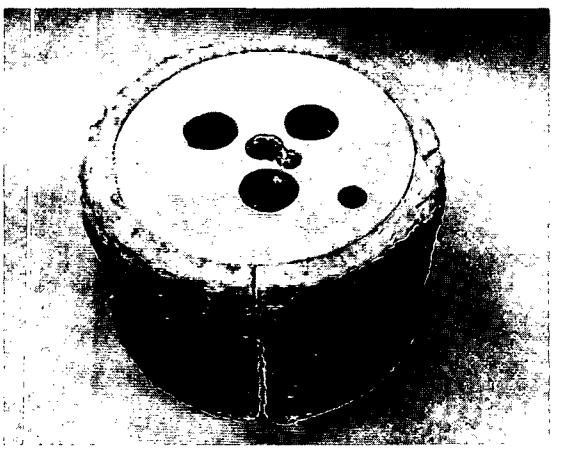

Figure 2-20. Burner Insulation

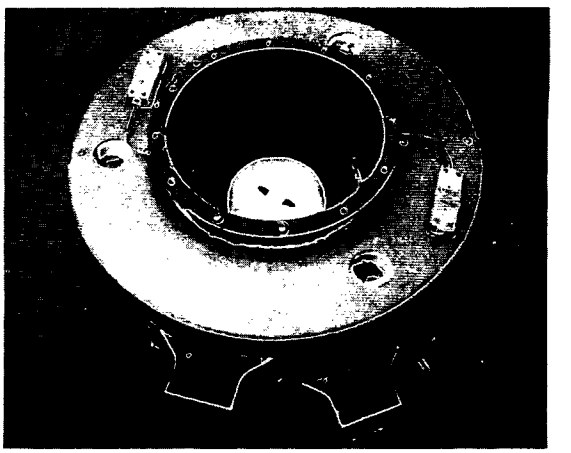

Figure 2-21. Assembled Combustor - Burner in Place and Thermocouple Test Leads Connected

Assembly of the Proto 2 combustor was completed near the latter part of this reporting period. As such, limited testing was performed. A comparison between Proto 2 performance goals and projected performance is presented in Table 2-11.

Table 2-11. Proto 2 Performance Summary*

Parameter	Goal	Projected Performance
Heater Head Effectiveness	92%	92 - 96%
Preheater Effectiveness	60%	62 - 68%
Pressure Drop	<2 IN. H_2O	1.25 IN. H_2O
CO Emissions	0.04%	0.04%
Combustor Efficiency	82%	81.3%

*Note: Performance summary goals are indicated for a 41 kBtuh firing rate and 15% excess air.

Combustor/Engine Exhaust Seal

A sealing device is necessary to prevent the escape of hot exhaust gases at the combustor/engine interface. Proto 1 testing revealed that a Kaowool rope-type seal exhibited excessive wear characteristics. Various alternative designs were considered. Reduced interface operating temperature was achieved by mounting a flange ring to the combustor and insulating the ring from the combustor with a gasket. This change permitted use of a conventional type seal consisting of a graphite impregnated PTFE seal ring. The differential pressure across the ring will be minimal (less than 1 inch H_2O) and the projected seal operating temperature is $400^{\circ}F$.

Insulation System

Two revisions to the Proto 1 combustor insulation system have been incorporated in the Proto 2 design. First, a rigidized Kaowool insulation system is used in the interior of the combustor instead of loose Kaowool blanket insulation. This type of insulation system has been found to be effective eliminating the introduction of unwanted insulation debris within the combustor.

Second, the one-half inch thick layer of Kaowool insulation on the exterior surface has been increased to one inch. The insulation system consists of a number of pieces, with segments rigidized after covering of the combustor. The projected heat loss is summarized in Table 2-12.

Table 2-12. Projected Combustor Heat Loss Summary

Q_{input}:	41,000 BTUH
$Q_{exhaust}$:	6,355 BTUH
$Q_{conduction}$:	1,290 BTUH
Q_{engine}:	33,355 BTUH
Q_{engine}/Q_{input}	81.3%

A portion of the insulation system is shown in Figure 2-20.

Insulation Environmental Housing

An anodized aluminum can protects the insulation from adverse environmental conditions, and consists of a three-piece assembly as shown in Figure 2-16. The use of moisture-proof epoxy type coatings to protect the insulation from the environment is anticipated for future applications. At the present time, the development of such coatings is being investigated by the insulation vendor, Babcock and Wilcox.

Auxiliary Equipment

To accommodate the dual firing rate requirement of the Proto 2 combustor, a White Rodgers two-stage electric gas valve will be utilized. The gas valve and its operating characteristics are shown in Figure 2-22. Testing of the two stage gas valve will be conducted along with combustor component testing during the next reporting period.

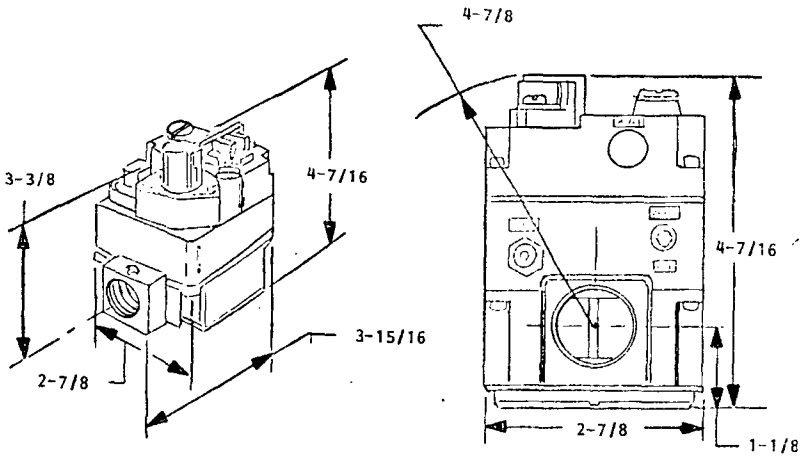

VENDOR:	WHITE-RODGERS
TYPE VALVE:	TWO STAGE, ELECTRIC
AMBIENT TEMPERATURE RANGE:	-40°F TO 175°F
MAXIMUM PRESSURE:	0.5 PSI
MOUNTING:	MULTIPOISE
CAPACITY:	60 KBTU/HR MAXIMUM ADJUSTABLE STAGING

Figure 2-22. Two Stage Electric/Gas Valve

GE has selected Torin Corporation to design and fabricate an air blower to satisfy combustor performance requirements. Projected static pressure/air flow requirements are indicated in Figure 2-23. At the 41 kBtuh firing rate a substantial change in static pressure on the blower is expected from start-up to steady state operating conditions. At the 24.4 kBtuh level, this change in static pressure will be slight. Therefore, a blower that can satisfy three distinct operating levels is required.

Torin's initial blower design used a three speed motor. Motor instability at the low firing rate operating point was the reason for abandoning this design concept. A triac controlled motor exhibited similar instabilities. An orifice plate cover on the blower inlet is currently being investigated as a candidate for the design. A damper mechanism will be used in conjunction with an appropriate hole pattern to vary the blower output. Testing by Torin indicates stable operation of all operating points required. Design of a suitable damper mechanism is underway.

A Purolator disposable spin on type filter will be used to filter the inlet air to the combustor. This filter introduces minimal pressure drop under operating conditions and is shown in Figure 2-24.

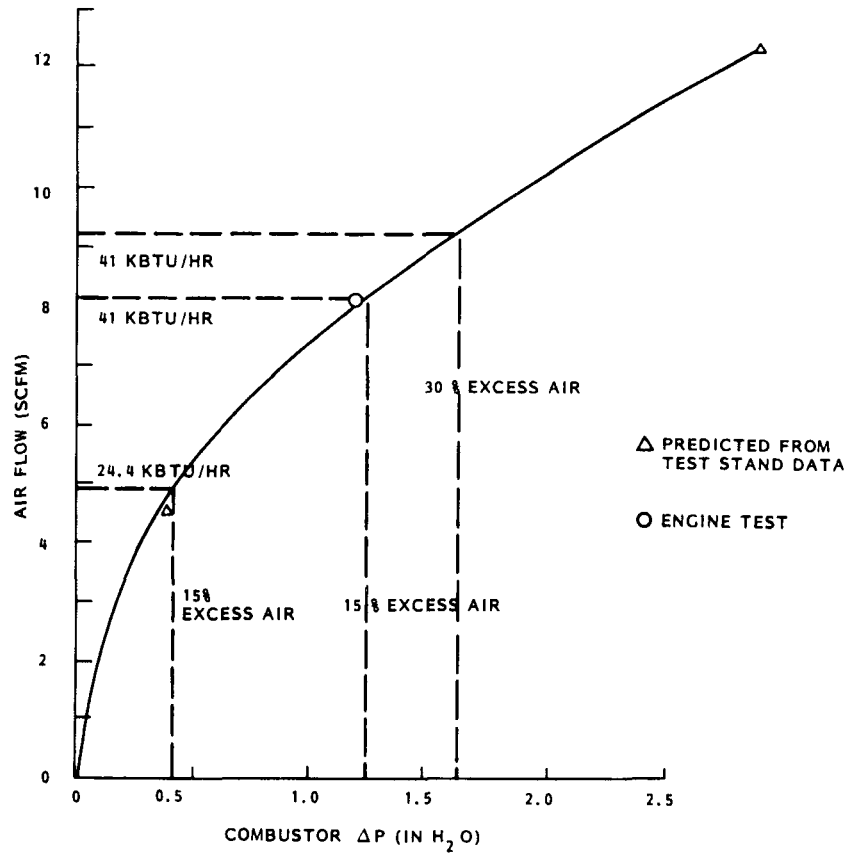

Figure 2-23. Proto 2 Pressure Drop vs. Required Air Flow

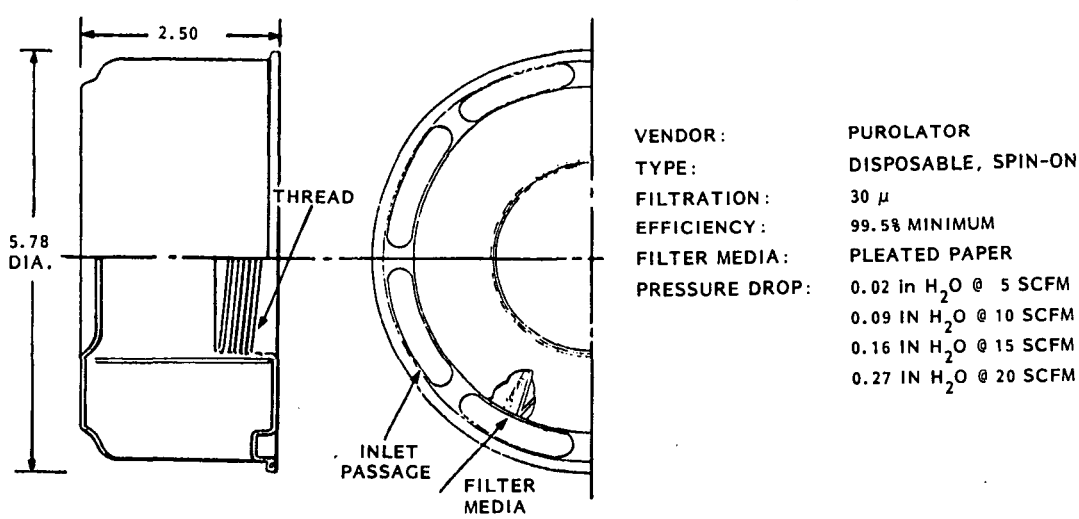

Figure 2-24. Spin-on Air Filter

2.3.4 FABRICATION

Fabrication and procurement of all combustor parts was completed per the schedule during this reporting period. Final design of the blower will be completed in the next period and procurement of the blower will be processed.

2.3.5 ASSEMBLY/FACILITY INTEGRATION

Minor changes to the existing combustor test facility were completed to accommodate the new engine/combustor interface assembly. The assembled Proto 2 combustor was installed on the test stand along with the two stage gas valve. A high capacity facility blower will be used to satisfy air requirements until design, fabrication and procurement of the system blower has been completed.

2.3.6 TESTING

Test Plan

The test plan was formulated to permit Proto 2 combustor performance assessment under system operating conditions. Minor modifications of the combustor may be required, based on test results, to insure that the unit meets the performance goals listed in Table 2-11.

Prior to assembly of the cover plate to the combustor, a hot wire anemometer will measure the velocity distribution of inlet air around the circumference of the preheater. (A balanced velocity distribution is essential to optimum combustor performance.) Performance will be evaluated at four distinct firing rates 20, 24, 41, and 60 kBtuh. The amount of excess air at each firing rate will be varied to cover the 0, 15 and 30 percent levels. Metering valves in the air and natural gas inlet lines will be used to set the operating conditions. Water circulated through the heater head will remove the heat of combustion. Combustor performance for the case when helium is circulated through the heater head will be projected from test results based on analytical predictions. Gas valve testing will be conducted after satisfactory combustor performance has been ascertained.

Check Out Tests

Combustor assembly and integration with the test stand was completed in the latter portion of this reporting period. Therefore, limited testing was completed. Measurements with a hot wire anemometer indicate satisfactory inlet air velocity distribution. Testing at design conditions demonstrated that the carbon monoxide emissions level exceed the 0.04% performance goal. Gaskets have been introduced behind the spacers in an effort to introduce a greater degree of turbulence in the air/gas mixing chamber. This effort has been successful in reducing carbon monoxide emission levels, but with somewhat increased preheater pressure drop. Optimization of the spacer gap will continue in the next reporting period.

2.3.7 PLANNED ACTIVITY FOR NEXT PERIOD

During the next reporting period the following combustor-related activity is planned:

1. Combustor testing to meet all design goals
2. Gas valve testing
3. Complete blower design, fabrication, procurement and test
4. Investigations into alternative protective coverings for the combustor insulation system.

2.4 ENGINE

2.4.1 SUMMARY

During this reporting period the Proto 2 Stirling Engine effort progressed through the detail design phase and into the fabrication and procurement cycle. Completion of the design and related detail drawings was accomplished with no major departure from the design requirements and parameters established and presented during the last reporting period (July thru December 1978 semi-annual report). The following paragraphs present an abbreviated review of the design requirements, plus a more detailed description of the engine components and their fabrication status.

2.4.2 DESIGN REQUIREMENTS

For ease of reference, design requirement and parameter summaries previously reported are shown in Tables 2-13 and 2-14. The Proto 2 engine has been designed for a 3 kW power output with a heater head temperature of 1250°F and an operating frequency of 30 Hz. The unit has been designed for a 15-year life assuming 5500 operating hours per year and a maximum allowable material creep of 1 percent throughout its design life. The Proto 2 engine design retains basic, proven design features of the Proto 1 unit, while incorporating these major differences in addition to increased design life:

1. A second gas spring has been added to the power piston assembly to increase the engine operating frequency to 30 Hz.

2. An electromagnetic engine start mechanism has been incorporated into the power piston/displacer assembly.

2.4.3 ENGINE DESIGN DESCRIPTION

The Proto 2 Free Piston Stirling Engine design has been completed and all detail drawings have been issued. Figure 2-25 shows a cross-sectional view of the combustor/engine/compressor assembly, and identifies major subassemblies and components.

Table 2-13. Proto 2 Engine Design Parameters

PARAMETER	VALUE
Engine Bore Size	2.875 IN. DIA.
Power Piston Stroke (Peak-to-Peak)	1.30 IN.
Power Piston Weight	26 LB
Cylinder Head to Cooler Port Center Line	7.87 IN.
Displacer Gas Spring:	
Rod Area/Dia. (Mean)	1.35 IN.^{2}/1.31 IN.
Volume (Mean)	7.2 IN.^{3}
Displacer Length	6.041 IN.
Displacer Weight	2.0 LB
Piston Dynamic Centerline to Displacer Dynamic Centerline, (Refer to Engine Housing)	0.78 IN.
Displacer to Piston Phase Angle	39 Degrees
Displacer to Piston Minimum Dynamic Clearance	0.05 IN.
Power Piston 2nd Gas Spring:	
Area	14 IN.^{2}
Volume	125 IN.^{3}
Operating Pressure	870 PSI (60 BARS)

Table 2-14. Proto 2 Engine Design Requirements

Engine Power Output	3 KW
Operating Pressure	870 PSI (60 BARS)
Operating Temperatures:	
Heater head tubing	1250°F
Cylinder Head	1300°F
Heater Head Fins	1700°F
Cold side coolant inlet	140°F
Maximum Charge Pressure	1160 PSI (80 BARS)
Working Fluid	Helium
Life	15 Years
Operating Hours Per Year	5500 HR
Operating Frequency	30 HZ
Fatigue Endurance Life	8.9 x 10^9 Cycles
Design Safety Factor	2.25
Allowable Creep	1% Maximum

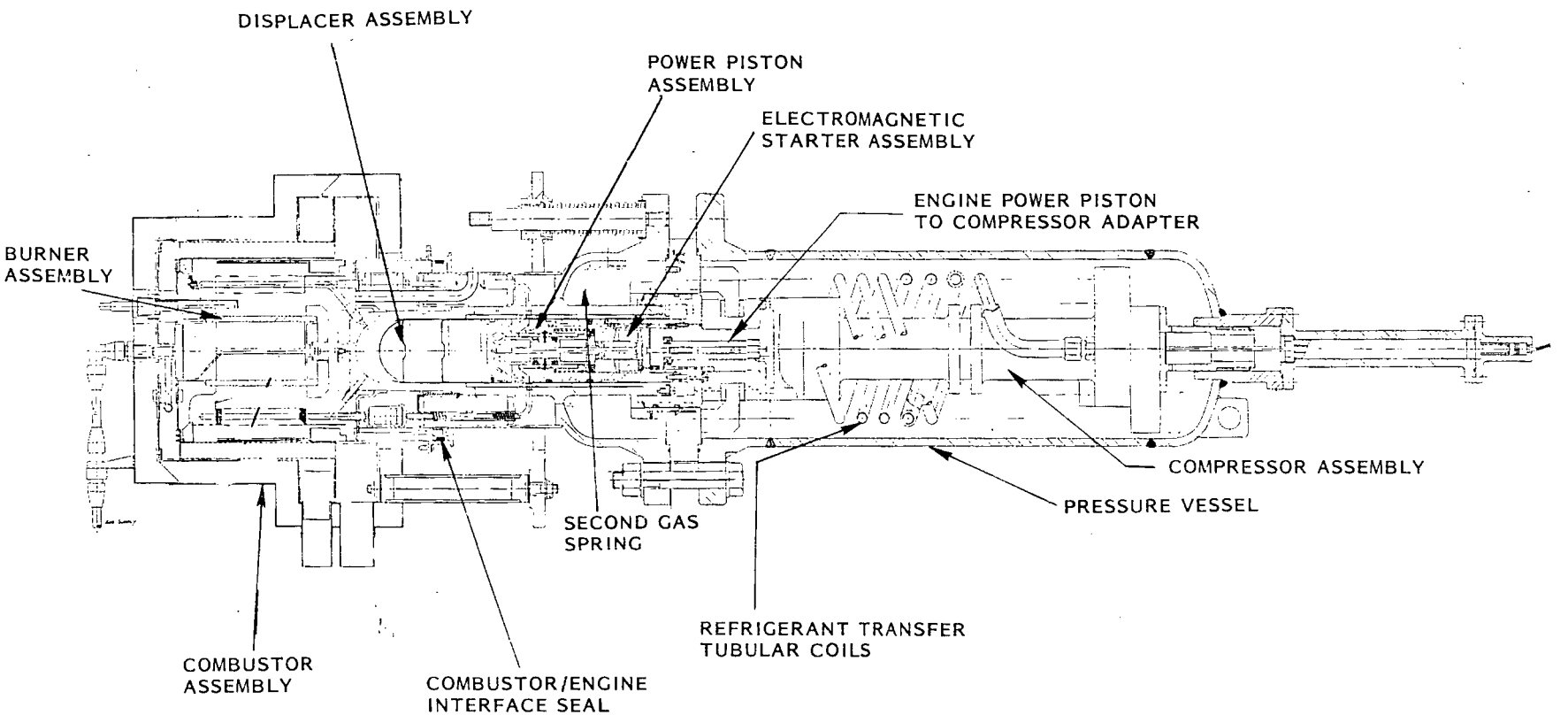

Figure 2-25. Proto 2 Combustor/Engine/Compressor Assembly

With issuance of the detail drawings, parts procurement/fabrication was initiated in conformance with a schedule that would permit start of assembly of the first Proto 2 unit during August 1979.

The following paragraphs provide a more detailed description of various engine sub-assemblies and components.

Housing Assembly

The engine housing assembly is the integrated (brazed) assembly of the engine housing weldment, the heater head/finned tube heat exchangers, regenerator assemblies, cooler assembly, and the engine to combustor interface seal ring. A cross-sectioned drawing of the engine housing assembly is presented in Figure 2-26. The housing weldment is a bi-metallic assembly utilizing Inconel 625 on the engine hot side and 316(L) stainless steel on the cold side. The heater head fins and tubes are also Inconel, 600 and 625, respectively, and the regenerator housings are Inconel 625. The generator matrix is 309 stainless steel random packed

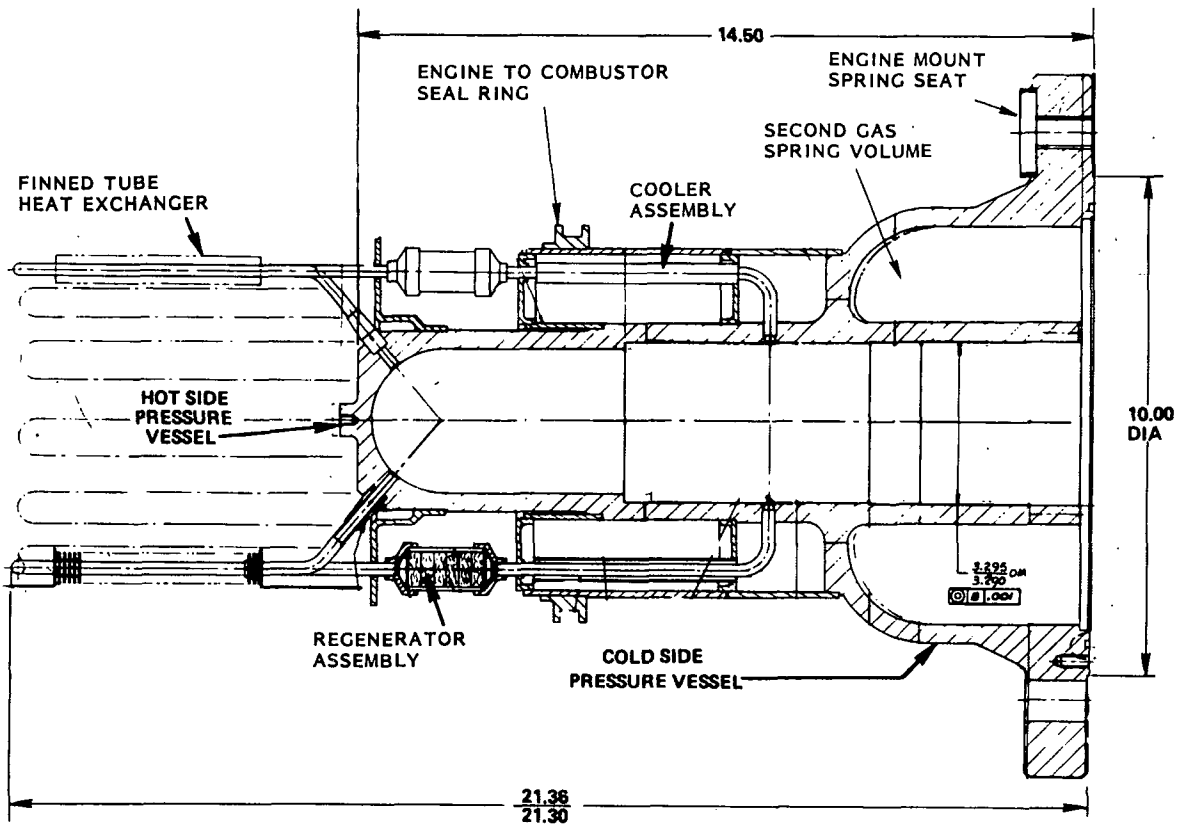

Figure 2-26. Engine Housing Assembly

wire with a porosity of 80%. All detail parts of the engine housing assembly other than those mentioned are 316(L) stainless steel fabrications. Leak-tight attachment of the various detail parts to the housing weldment and/or to each other is accomplished by nickel brazing (AWS A5.8; B N_i-1).

Displacer/Piston/Adapter Assembly

The reciprocating components of the Free Piston Stirling Engine consist of the displacer and power piston assemblies shown in the combined assembly drawing presented in Figure 2-27. The inertia compressor mounts to the power piston subassembly by means of the adapter assembly and is thereby an integral part of the power piston assembly. Reference is made to Section 2.5 of this report for a discussion of the compressor assembly.

The displacer assembly consists of a displacer, displacer rod, seal ring, rider ring, overstroke stop, electromagnetic starter core, a tie rod, and an LVDT(linear voltage differential transformer) core. Each of these components is identified in Figure 2-27.

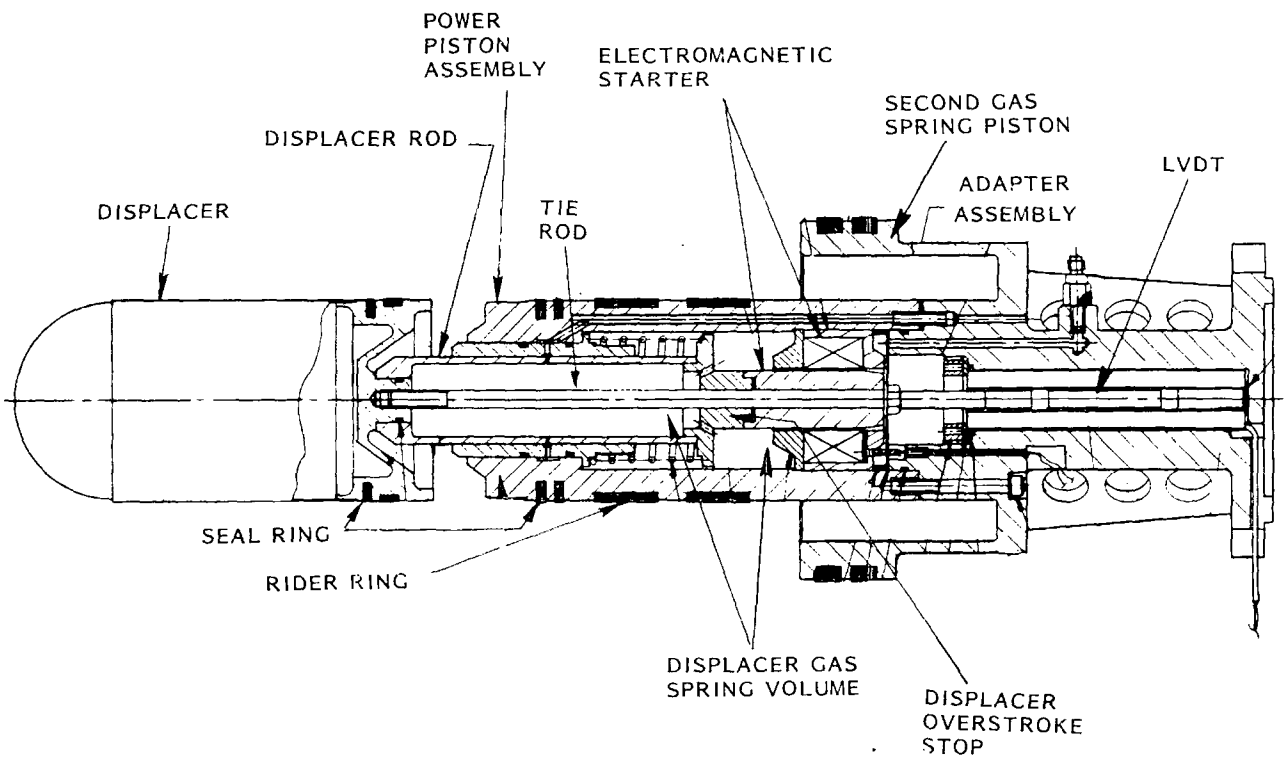

Figure 2-27. Displacer/Piston/Adapter Assembly

The displacer is a hollow cylinder having a hemispherical dome facing the engine "hot side" end and a "cold side" end incorporating an internal cone with a displacer rod mounting boss. Three radiation shields have been provided inside the displacer to both reduce heat losses across the unit and to furnish structural support. The entire displacer body is a brazed Inconel 625 fabrication. Ring grooves have been provided on the displacer cold-end outside diameter for the installation of a seal ring and a rider ring. A discussion of these rings is given in a subsequent paragraph in this section.

The displacer rod is a multi-functional component. It is a bearing shaft for supporting the displacer assembly, the displacer gas spring piston, and in conjunction with the power piston it provides the centering port mechanism for dynamically centering the displacer assembly with respect to the power piston. Since the displacer rod is an integral part of the displacer gas spring, displacer to power piston "tuning" features have been provided by designing for three interchangeable rod sizes (permitting piston area changes) plus the capability of installing spacers within the rod internal volume to change the gas spring volume. The three rod areas of 1.22, 1.35, and 1.48 in.^{2} were sized to provide nominal design along with a variation of approximately ±10%. The internal spacers give a gas spring volume reduction capability of 30% to 35% for each displacer rod size. The displacer rod is aluminum, with the outside surface anodized and then coated with teflon impregnated with a film of M_oS_2. The overstroke stop and electromagnetic starter core are attached to the end of the displacer rod by means of a tie rod, and the LVDT core is attached to the end of the tie rod by a tie rod extension/adapter.

The power piston assembly is composed of a hollow cylindrical aluminum body which internally positions and supports the displacer rod bearing sleeve, the electromagnetic starter coil and housing assembly, and also provides external ring grooves for two piston seals and two rider rings. The displacer rod bearing sleeve is 4340 steel with a chrome plated bore.

The sleeve is a shrink-fit installation into the power piston body. Dynamic centering of the displacer with reference to the power piston is accomplished through a vent port feature that

vents bounce space pressure to the displacer gas spring volume at mid-stroke, once each half cycle of operation. Centering is thereby accomplished by repetitively re-establishing the mean gas spring pressure to bounce space pressure at the displacer mid-stroke position. Provisions have been made to relocate the vent ports in the displacer rod if tuning is necessary. The power piston assembly is attached to the piston to compressor adapter by means of cap screws.

The power piston to compressor adapter assembly provides for a hard mount coupling of the compressor assembly to the power piston. The adapter assembly also includes the piston for the second gas spring and houses the displacer to power piston LVDT coil assembly (Figure 2-27). This adapter is aluminum to minimize weight.

Second Gas Spring

The Proto 2 engine design incorporates an additional gas spring from that of the Proto 1 design, the purpose of which is to increase the operating frequency from 22 - 25 Hz to approximately 30 Hz. This gas spring, designated the "second gas spring", operates on the power piston assembly in parallel with the working space gas spring. As shown in the Proto 2 assembly drawing, Figure 2-25, the second gas spring volume is formed by the engine housing wall and the adapter ring, and the piston is integrated into the power piston to compressor adapter assembly. The piston incorporates two seal rings to seal the second gas spring volume from the bounce space. Second gas spring to working space sealing is accomplished by the two piston rings provided on the power piston. The incorporation of the second gas spring in this configuration, provides the desirable feature of reducing the pressure differential across the power piston seal rings from that experienced on the Proto 1 unit. Analysis shows that the cyclic pressure difference between the engine working space and the second gas spring will have a maximum value of approximately 125 psi. A similar pressure differential will occur between the second gas spring and the bounce space. (The power piston seals of the Proto 1 engine sealed the working space from the bounce space, a maximum pressure difference of approximately 250 psi.) Seal wear should be significantly reduced in the Proto 2 design.

The second gas spring piston area is 14 in.^{2} and the volume at mid-stroke is 125 in.^{3}. Provisions have been made for installing spacer rings for reducing the volume by approximately 35% for tuning purposes.

The second gas spring also provides for dynamically centering the power piston assembly with reference to the engine housing. Similar to the displacer to power piston centering mechanism, bounce space pressure is vented to the second gas spring volume once each half cycle at the mid-stroke position. Centering is thereby accomplished by repetitevely re-establishing the mean gas spring pressure to bounce space pressure at the power piston mid-stroke.

Seal and Rider Rings

The Proto 2 engine design incorporates seal rings to minimize leakage past the displacer, power piston, and second gas spring piston; and rider rings as linear bearings on the displacer, power piston, and compressor upper support shaft. The design of each of these rings was based upon both the common requirements of all the rings, and specific requirements dependent upon its use and location in the engine. The common requirements include a 60 bar dry helium environment, no lubrication, an approximately sinusoidal reciprocating motion, and a long service life. Specific requirements for the seal rings include size, surface velocity, operating temperature, and pressure difference across the seal, which directly affects the seal face loading and drag force. Rider ring specific requirements include size, rubbing velocity, and radial load. Table 2-15 presents design parameters for the seal and rider rings.

The seal and rider rings, in general, are recognized to be critical long-life design components. For this reason, a variety of seal and mating material combinations have been selected for evaluation. Table 2-16 presents a listing of these materials. A parallel development project is being established to identify and evaluate additional materials and material combinations for potential use as engine seals, riders and bearing pairs.

Table 2-15. Seal And Rider Ring Design Parameters

Ring Type and Location	Quantity Required	Ring O.D. (In.)	Max. Surface Velocity (FPM)	Max. Piston Press. Diff. (PSID)	Nom. Oper. Temp. (°F)
Seal, Displacer	1	2.875	940	15	300
Rider, Displacer	1	2.875	940	N/A	300
Seal, Pwr. Piston	2	2.875	600	125	250
Rider, Pwr. Piston	2	2.875	600	N/A	250
Seal, 2nd Gas Spring	2	5.100	600	125	200
Rider, Compressor Support Shaft	1	2.000	600	N/A	140

Table 2-16. Seal and Rider Ring and Bearing Materials

A. Seal and Rider Ring Materials

1. K-30C, Carbon and Graphite filled PTFE
2. VESPEL SP-21, Graphite Filled Polyimide
3. ENVEX-1115, MoS_2 Filled Polyimide
4. ENVEX-1228, PTFE Filled Polyimide

B. Bearing/Sleeve Materials

1. 4340 Steel, Chrome Plated
2. Nitrided Nitralloy
3. Cast Iron (GC-40)

Electromagnetic Starter

The electromagnetic starter design incorporates a tapered plunger type magnet into the power piston/displacer assembly to initiate motion of the displacer during the engine start-up sequence. As shown in Figure 2-27, the magnet coil housing is installed inside the power piston bore, and the plunger is attached to the end of the displacer rod. The starter has been designed to provide an approximately constant force of 5 pounds throughout a stroke of 0.30 inches with an applied voltage of 21 Vdc. The sequence of engine startup is as follows. Displacer motion is initiated by pulsing the electromagnetic starter. The motion of the displacer shuttles the working fluid between the cold compression space and the hot expansion space, generating a thermodynamic pressure variation in the working space. The resulting pressure variation in the working space acts against the power piston face and initiates an oscillation of the power piston assembly, starting the engine.

Engine Mounting Stand

The Proto 2 FPSE is supported in an upright position by an engine mounting stand assembly. As shown in Figure 2-28, the stand has a rigidly mounted base and trunnion subassembly through which three isolation springs (with guide rods) elastically suspend the engine assembly. The isolation springs are designed to provide a transmissibility of less than 1 percent at the design operating frequency of 30 Hz. The stand base is a weldment with three tubular legs with inter-connecting angle iron support frames at the top and bottom. A trunnion mount feature is provided to facilitate removal of the combustor assembly from the engine without having to remove the entire engine assembly from the stand. After disconnecting the combustor igniter and flame detector wires, the air and gas inlet lines, and the exhaust duct, and removal of 4 trunnion retaining cap screws, the engine/combustor/compressor assembly can be pivoted approximately 45° and pinned in that position. In this tilted position, the combustor is in a readily accessible position for removal and/or repair. Provisions have been made to tilt the engine assembly as described without having to disconnect the compressor suction and discharge refrigerant lines and/or the engine coolant supply hoses.

2.4.4 FABRICATION

All Proto 2 engine detail and sub-assembly drawings, plus all engine assembly tooling drawings, were completed and issued during this reporting period. Vendor selection and fabrica-

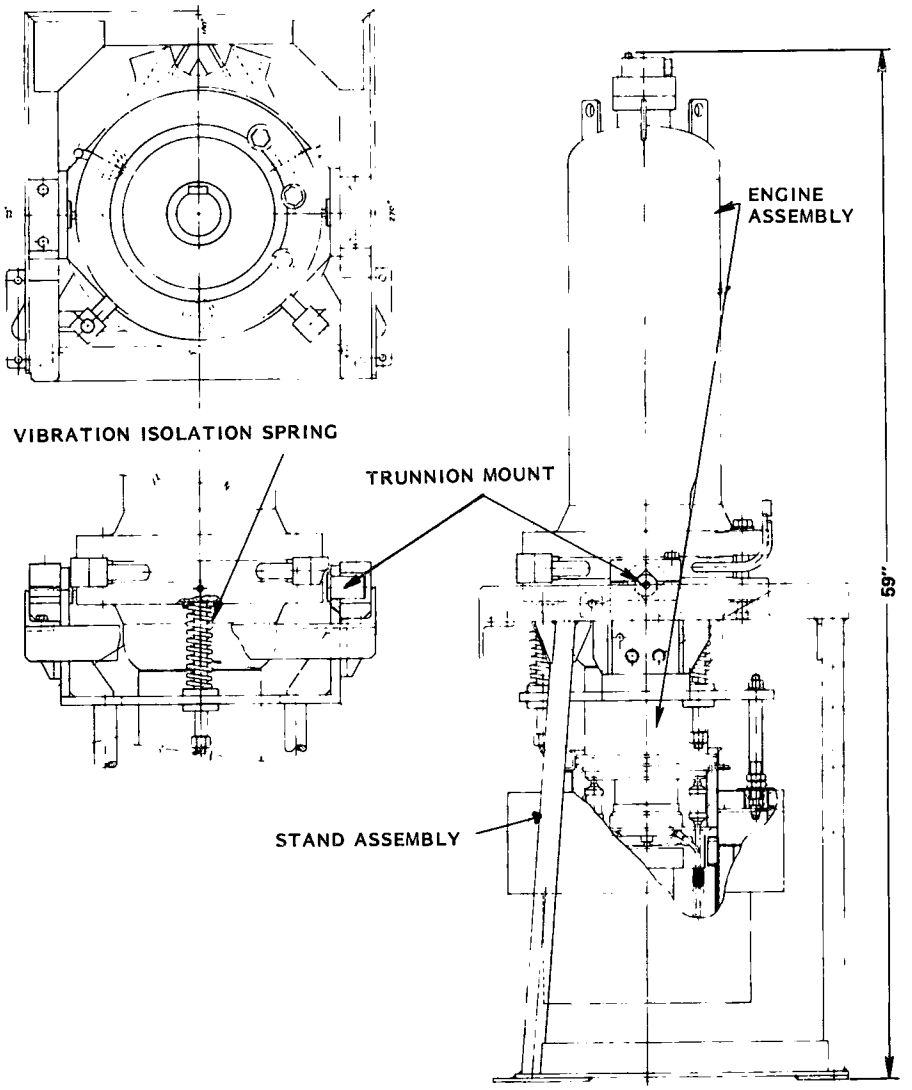

Figure 2-28. Engine and Stand Assembly

tion of the components were also initiated. Fabrication of the detailed engine components is on schedule with the exception of the engine housing assembly. Problems were encountered with the three piece, bi-metallic, engine housing weldment due to a lack of weld penetration during the electron-beam welding process. Although multiple welding samples were successfully completed to establish the EB-weld parameters (voltage, amperage, speed, focus, etc.), inadequate weld penetration was obtained on the prime hardware. X-rays coupled with visual inspections revealed isolated areas of unfused joints of varying depths from a few mils to approximately 1/8 inch. Techniques and procedures are being evaluated and developed for

use in rewelding the deficient weld areas by either EB or TIG weld procedures. Additional samples are being made to represent the prime hardware with a partially welded joint. New weld parameters will be established through the processing of these samples, which are scheduled for completion in early July. Once the technique is validated, the prime hardware will be rewelded. The additional engine housing effort is projected to extend delivery of the housing assembly by three weeks. This is not expected to impact the overall program schedule.

2.4.5 PLANNED ACTIVITIES FOR NEXT PERIOD

Activities planned for the Proto 2 engine during the next reporting period include the completion of fabrication and assembly; installation of the engine, combustor, and compressor into the Integrated Test Stand; and starting the Integrated Test effort.

2.5 COMPRESSOR

2.5.1 SUMMARY

The Proto 2 inertia compressor design was completed and fabrication initiated during this reporting period. This Proto 2 design is based on the proven design features of the previous units, Proto 1 and the Engineering Research Compressor (ERC), while making substantial modifications to the unit's physical geometry in stroke and piston diameter. A review of design requirements, description of design components and overview of progress during the last six months is presented in the following paragraphs.

2.5.2 DESIGN REQUIREMENTS

The design parameters for the Proto 2 compressor were discussed in detail in the previous semi-annual report. A brief summary of these parameters is presented here for convenience of reference. The compressor is essentially a spring-mass system with design flexibility in each parameter. The unit must function over a range of ambient operating temperatures which changes the heat pump operating characteristics, the primary factor being the suction and discharge pressures of the compressor. Design points at appropriate heating and cooling operating temperatures were selected for establishing compressor requirements as presented in Table 2-17. The compressor must meet these requirements while being driven by the Stirling engine whose related characteristics are also included in the table.

2.5.3 COMPRESSOR DESIGN DESCRIPTION

The Proto 2 inertia compressor design was completed, drawings generated, hardware ordered and fabrication begun during this report period. The compressor layout was completed during the previous reporting period and a design review conducted. There were no major changes made to the unit as a result of the review; however, this compressor does differ significantly from Proto 1 in that the compressor piston diameter was increased while the overall stroke decreased. This was done on the basis of extensive compressor and compressor-Stirling engine interaction analysis conducted during the previous six months. These changes produced a higher natural frequency in the compressor with an associated increase in engine-compressor operating frequency.

Table 2-17. Proto 2 Compressor Design Requirements

- COMPRESSOR INPUT POWER – 3 KW
- COMPRESSOR HOUSING EXCITATION STROKE – 1.3" PEAK-PEAK
- COMPRESSOR OPERATING FREQ. – 30 HZ
- DESIGN OPERATION CONDITIONS:

	COOLING MODE DESIGN PT. 95° DAY	HEATING MODE +2° DAY
– DISCHARGE	273 PSIA	215 PSIA
– SUCTION	88 PSIA	14 PSIA
– MASS FLOW	530 LB/HR	250 LB/HR
– SUCTION SUPERHEAT	50°F	–
– EFFICIENCY (ISENTROPIC)	70%	

- WORKING FLUID – REFRIGERANT 22
- MAXIMUM EXTERNAL PRESSURE – 1160 PSI
- EXTERNAL ENVIRONMENT – HELIUM
- LIFE – 15 YEARS
- OPERATING HOURS PER YEAR ≃ 5500 HR.
- FATIGUE ENDURANCE LIFE – $8.9 \times 10^{+9}$ CYCLES
- DESIGN SAFETY FACTOR – 2.25

In the design of the Proto 2 compressor, particular attention was given to minimizing the weight of the unit. This necessitated a detailed stress analysis of the compressor structure which is subject to a severe pressure and dynamic loading environment. The proven design features of Proto 1 were retained while making changes as necessary to improve performance. The predicted performance of the Proto 2 compressor is shown in Table 2-18 and in Figures 2-29 and 2-30.

The following paragraphs describe the various features of the compressor components. Figure 2-31, Compressor Assembly, Figure 2-32, Compressor Section View, and Figure 2-33, Compressor/Spring Tube Assembly, are referenced for the following discussion.

Table 2-18. Proto 2 Compressor Design and Performance Parameters

Design		
Compressor Stroke	2.50	IN.
Piston Diameter	2.125	IN.
Piston Mass	9.65	LB.
Piston Length		
• Cast Iron	5.00	IN.
• Cast Iron - Kennertium	4.00	IN.
Gas Spring External Volume	2.60	$IN.^3$
Gas Spring Ref. Pressure 95° Day	91.0	PSIA
Gas Spring Ref. Pressure 0° Day	110.0	PSIA
Suction Gas Superheat Temperature	50.0	^oF

Performance		
Degree Day (^oF)	95°	0°
Suction Pressure (PSIA)	91	29
Discharge Pressure (PSIA)	276	243
Efficiency (Isentropic), (%)	70	66
Flow Rate (LB/HR)	558	284
Power (KW)	3.22	3.40
Piston Stroke (IN)	1.70	2.38
Natural Frequency (HZ)	40	35.7

Cylinder Housing

The cylinder housings are the most complex subassemblies of the inertia compressor and are essentially similar to the Proto 1 designs. The two, upper and lower, are machined 6061-T6 aluminum, with a shrink-fit cast iron (Meehanite GC40) liner providing a wear resistant running surface for the compressor piston. The cast iron is oil wetted during compressor operation, but also possesses inherent lubricant qualities due to the presence of

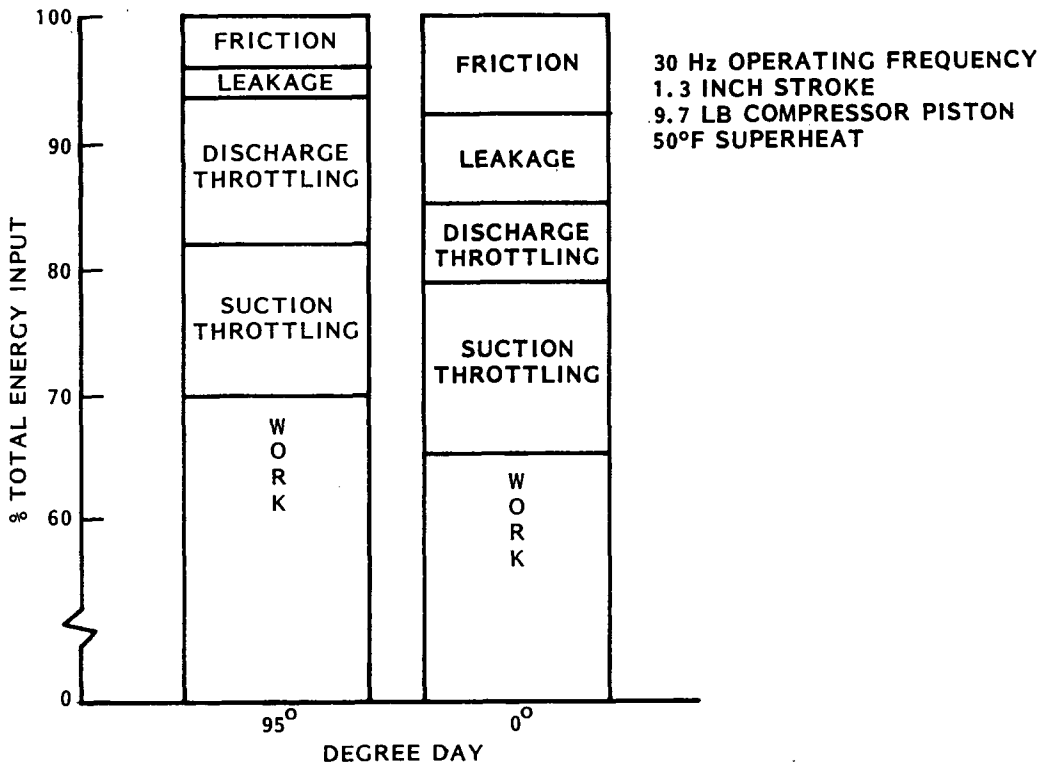

Figure 2-29. Proto 2 Compressor Losses

graphite. One end of the cast iron portion of the cylinder is the mounting interface for the compressor valve assembly while the aluminum in the same region forms the suction manifold for the cylinder.

The opposite end (smaller diameter) mates with the compressor mid-seal housing forming the gas spring region. Additional volume for the gas spring is provided by external cavities welded longitudinally on the exterior of the cylinder. A cavity for supplying a reference pressure to the gas spring is also welded to the body. Both volumes are ported through the housing to the gas spring volumes. A check valve is installed in the upper cylinder body to facilitate start up by venting gas into the upper gas spring as the piston lifts off the mid-seal housing.

The upper cylinder housing also interfaces with the suction tubular spring coils in the region of the suction manifold. O-ring seal fittings interface with the tubular springs and interconnecting manifold tubing. The Proto 2 housing projects out to the diameter of the tubular

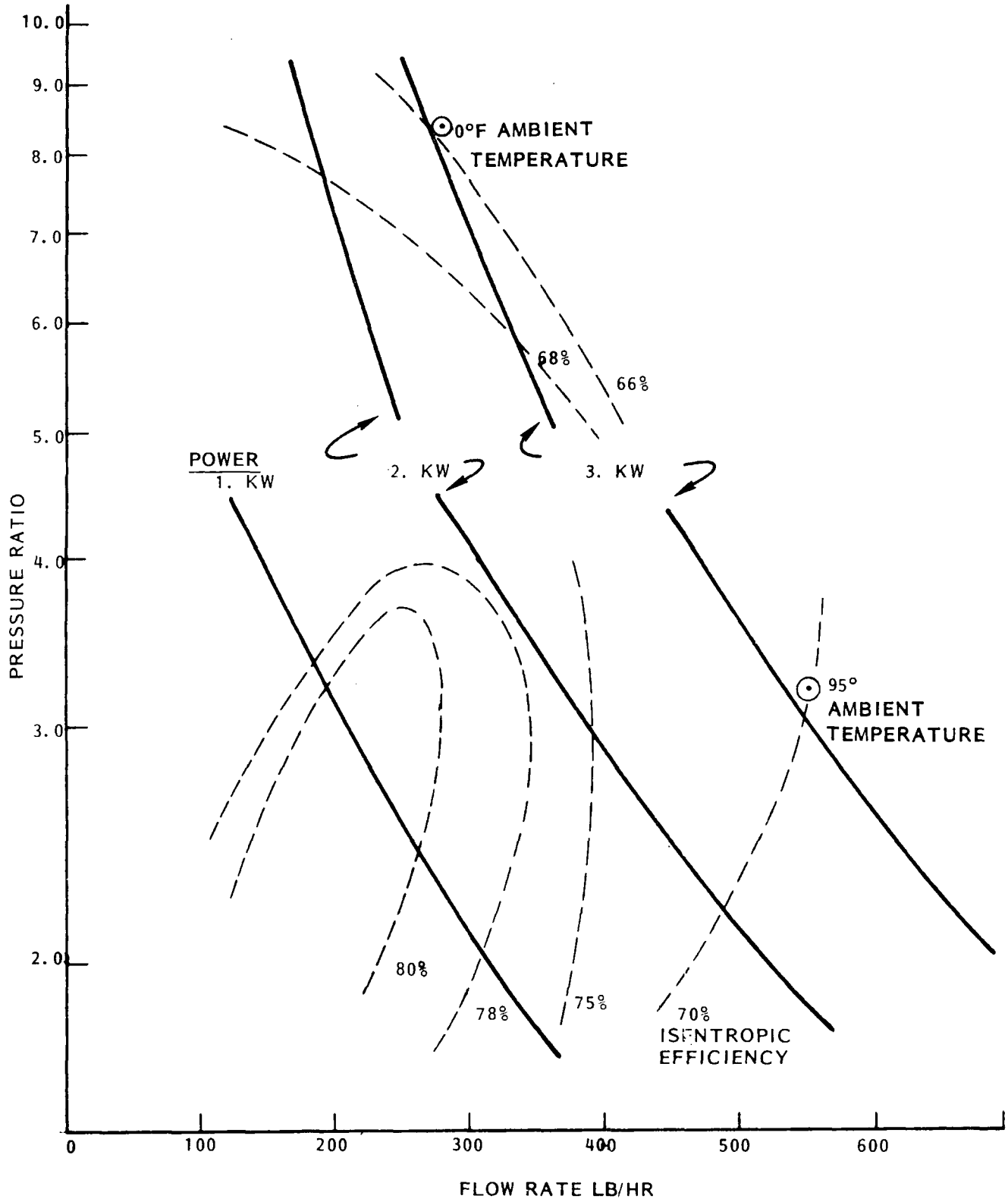

Figure 2-30. Proto 2 Compressor Performance

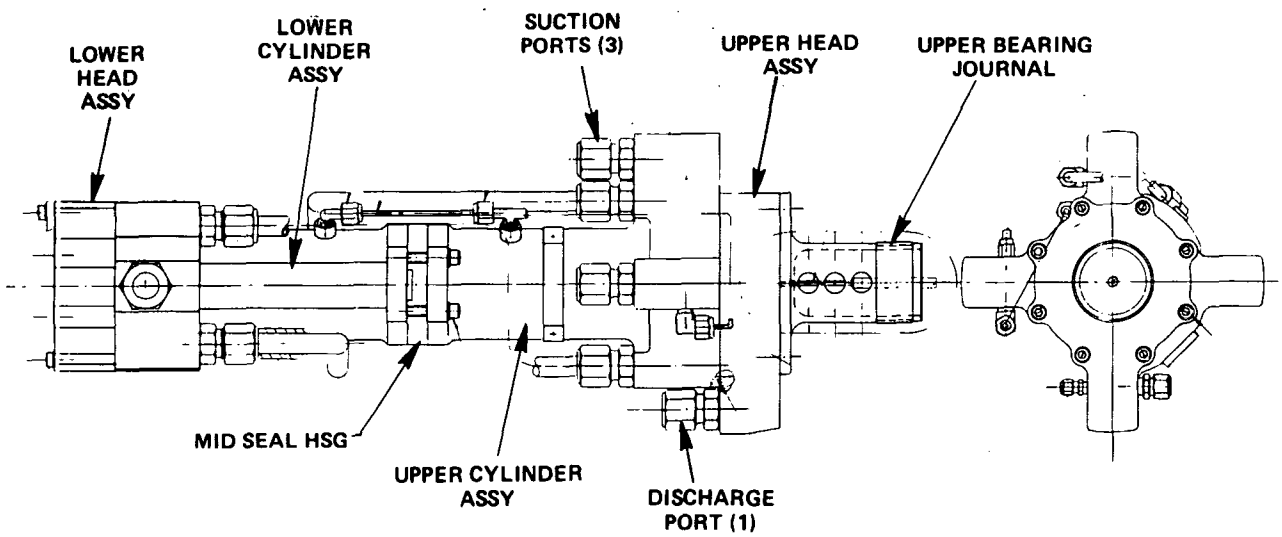

Figure 2-31. Proto 2 Compressor Assembly

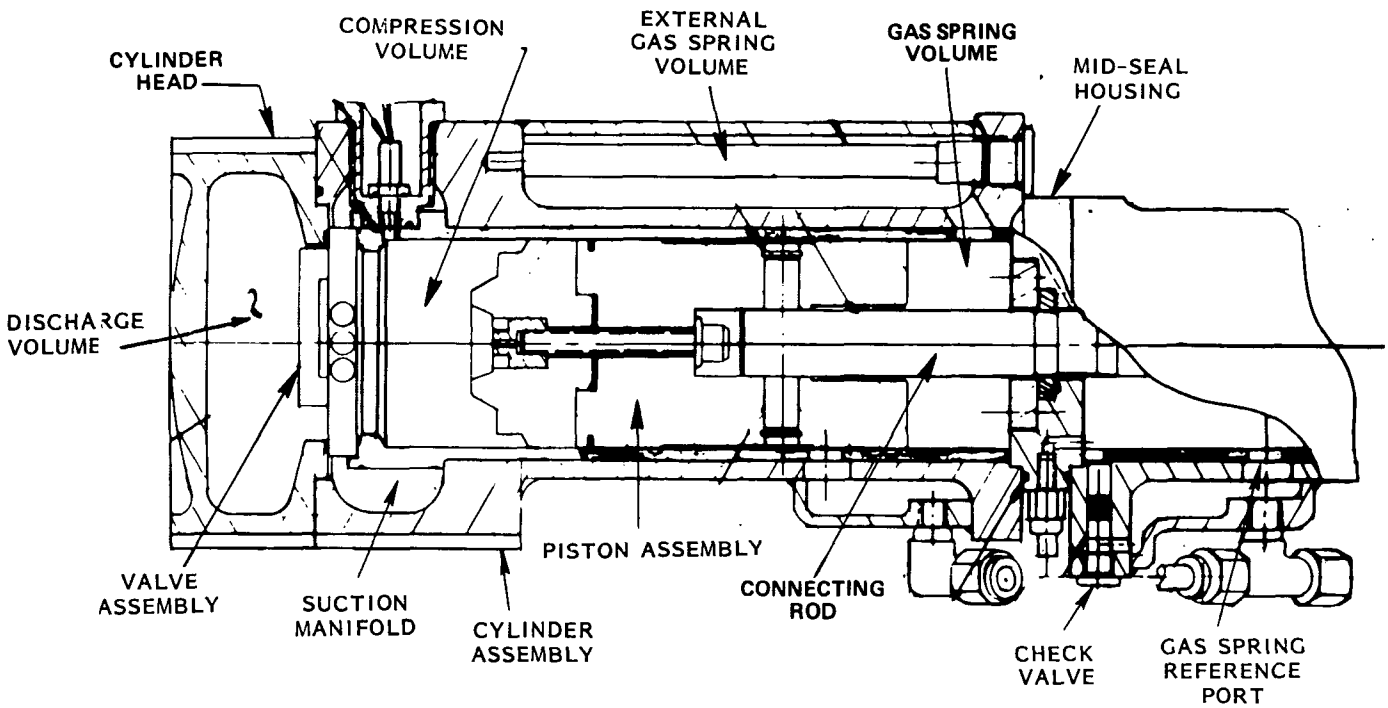

Figure 2-32. Proto 2 Compressor Assembly-Section View

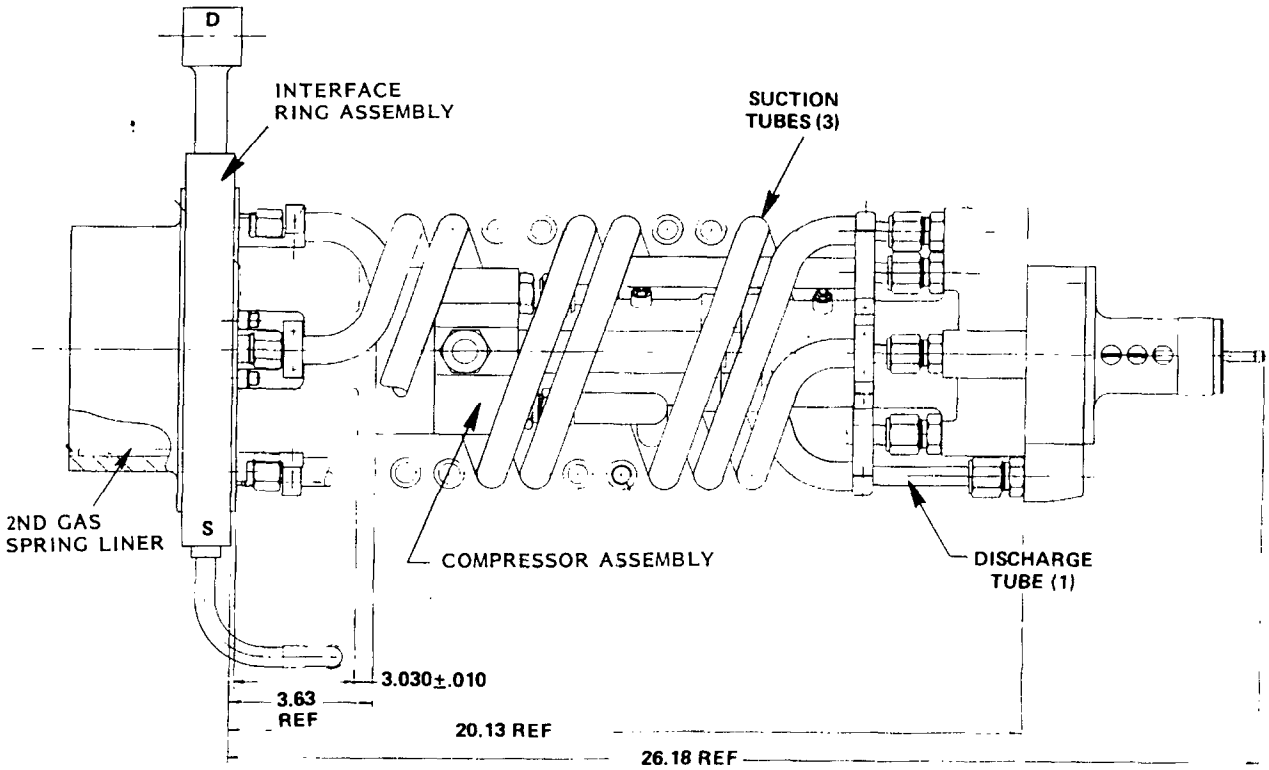

Figure 2-33. Proto 2 Compressor/Spring Tube Assembly

spring to eliminate the compound bend that was required in the spring coils of the Proto 1 configuration

Cylinder Heads

The cylinder heads, upper and lower, are machined 6061-T6 aluminum alloy and perform several functions. Both heads retain the valve assembly in position by loading through a metal C-seal and are formed to provide a cavity above the valve serving as the discharge manifold. The head seals off the suction manifold in the cylinder housing from discharge and helium bounce space pressure via the C-seal and O-Ring respectively.

The upper head projects to interface with the discharge tubular spring coil and also provides the mounting interface for the upper engine bearing support structure. The lower head discharge manifold cavity is connected to the upper's via external tubing, while the structural features interface with the engine-compressor adapter housing.

Piston and Rings

The Proto 2 compressor pistons are a two piece bolted construction utilizing a cast iron (ASTM A-3S) main body for optimum bearing surfaces and a tungsten alloy (N-10) head for increased mass. The outer diameter of the cast iron piston is relieved at the mid-section to reduce drag and provide an oil retention area. The piston ring groove is also machined into the leading edge of the cast iron section. A one piece piston fabricated entirely of a bearing bronze alloy will also be evaluated as a lower cost alternate to the cast iron/tungsten alloy combination.

The two piston assemblies are attached by a connecting rod and wrist pins with axis at 90° to form an articulating, self-aligning assembly. The connecting rod, in combination with a cast iron close tolerance ring located at the mid-housing, seals and isolates the upper and lower gas spring volumes. The connecting rod is also relieved mid-length to allow pressure equalization between upper and lower gas springs to insure centered operation of the piston assembly within the cylinders.

The piston rings are a typical thin section cast iron design and are used in electrically driven heat pump compressors. The rings have been designed with several types of joints; butt, angle butt and the lap joint. The angle and the lap joint rings will be evaluated in Proto 2 testing as these configurations minimize leakage, the lap more so than the angle, but with a higher fabrication cost.

Gas Spring Configuration

The cavity behind each compressor piston along with an additional external volume form the compressor "gas springs". These gas springs assist in producing the desired compressor natural frequency, piston stroke and centering, and the reduction of compressor susceptibility to varying operating conditions. The gas spring function is effective during slightly over half the stroke of the piston, while the initial pressure level is controlled by a reference pressure supplied by an absolute pressure regulator. The piston itself acts as a spool valve to open the gas spring volume to the reference pressure volume. The external volume of the gas spring interconnects with the internal volume via a port approximately .30 inch from

the mid-housing. The piston, again functioning as a spool valve, can block off the external volume and thereby produce a much stiffer or "hard" gas spring to limit off-center operation or inhibit potential collision between piston and mid-housing.

Lubrication System

A passive lubrication system is employed for the Proto 2 compressor as was the case in the Proto 1 unit. Only slight modifications have been made to insure a positive migration of oil to the gas spring volumes. The lubricant, standard refrigerant white mineral oil, is transported by the refrigerant and is maintained at a concentration of 1/2 to 1 percent by weight with respect to the R-22 (at flowing conditions). This level does not significantly impair the heat transfer properties of the refrigerant/heat exchangers but does provide adequate lubrication for the piston-cylinder interface, rings and connecting rod.

The gas spring pressure regulator in Proto 1 inhibited gas flow into the volumes resulting in poor oil migration and lubrication. A vent port controlled by the piston acting as a spool valve has been provided in the Proto 2 unit to insure a positive flow of oil to the suction manifold through the gas spring regulator system.

Tubular Spring Coil

The suction and discharge refrigerant gas is conveyed to and from the compressor through four tubular spring coils (3 suction and 1 discharge) within the helium environment of the engine bounce space. These tubular coils absorb the dynamic stroke (1.3 inch) and operating frequency (30 Hz) of the compressor-engine which corresponds to over 8.9×10^9 cycles during the life of the unit (15 years). Two materials have been identified for this application, Almar 362 and PH 15-7 Mo RH 1100, the former being the prime candidate. The Almar 362 has a fatigue factor of safety of 3.5. This is higher than the PH 15-7 Mo previously used in Proto 1, while another key advantage is that it may be fabricated as seamless tubing rather than a welded seam configuration.

The mechanical winding process for the coils was defined, as well as the heat treatment and the overall effects resulting from the thermal cycling. Three sets of coils were fabricated and are ready for assembly. Figure 2-34 depicts one set of coils.

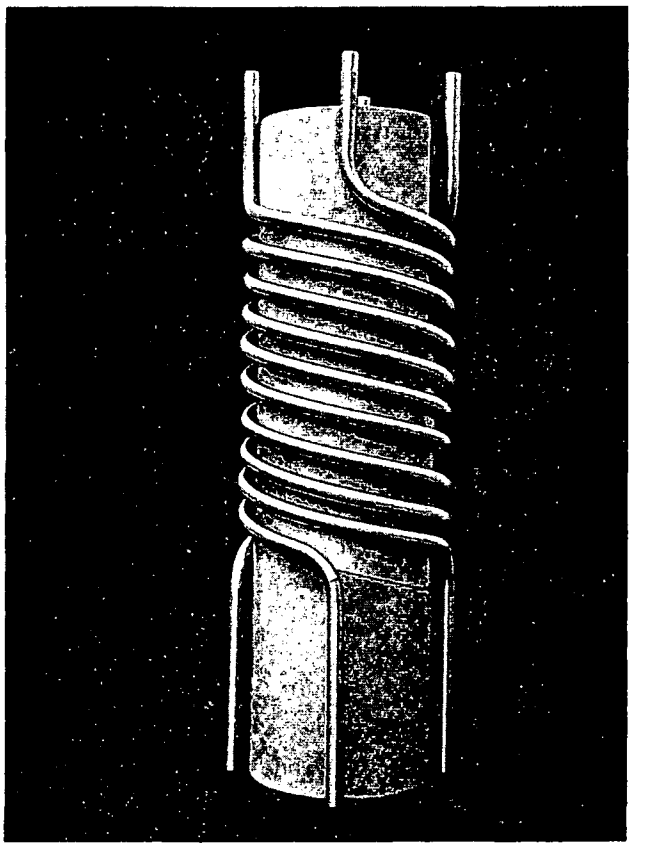

Figure 2-34. Proto 2 Tubular Spring Coils

One of these coils was placed on test in the tubular spring coil test stand and to date has completed over 305 hours of operation corresponding to 3.28×10^7 cycles at a stroke and frequency level of 1.75 inches and 30 Hz respectively. These stresses are 35% greater than design values, and at these conditions the number of cycles is past the knee of the S-N curve for the fatigue endurance limit of the Almar 362 material. Testing is continuing around the clock.

Pressure Vessel and Interface Ring

The nominal 8 inch ID pressure vessel enclosing the compressor and forming the engine bounce space is essentially the same as Proto 1. The lower end appropriately interfaces with the interface ring to insure alignment of the upper engine bearing located in the fitting at the top of the vessel. Bearing liners are pressed into this fitting which also supports the dynamic position sensing instrumentation (LVDT) that has been recessed into the pressure

vessel to reduce the overall height of the unit. The upper engine bearing rider ring is supported by a structure mounted to the upper discharge head of the compressor.

The following liner and rider ring materials have been selected for evaluation: Liner - A1S1 4340 chrome plated and Meehanite GC-40 cast iron with a teflon coating, rider ring - carbon/graphite filled teflon (K30C) and polyimide (ENVEX-1115). These materials and their selection are more fully covered in the engine section of this report.

The interface ring contains all the interface piping and instrumentation i.e., tubular spring tubes, pressure and temperature sensor feedthroughs, and engine charging ports. This ring is located between the pressure vessel and the engine housing and also supports the liner for the engine's second gas spring. The second gas spring design is discussed more fully in the engine section.

2.5.4 FABRICATION

The fabrication of Proto 2 compressor components was initiated and 50% completed at the end of this reporting period. Fabrication of longer lead items was begun by the end of March with the balance following during April. An 18-week fabrication schedule is planned, with deliveries of compressor components projected for the end of July.

Most of the compressor machining is being performed by previously qualified vendors, with a portion being performed by GE's machining facilities at Valley Forge. The pressure vessel and interface ring are being manufactured at GE's Evendale machine shop along with the engine components.

Unlike the Proto 1 effort, the fabrication of the tubular spring coils was performed in-house. The mechanical winding process was defined, as well as the heat treatment and associated thermal cycling distortion which proved to be minimal for the Almar 362 material tubing. Three sets of coils (4 each set) were fabricated and are ready for final fitting at engine assembly and subsequent heat treatment. The alternate tube material (PH 15-7 Mo) was received from the vendor and placed in stock as backup.

2.5.5 TESTING

The test plan was started during this period and will be completed during the next reporting period. Instrumentation requirements were established for the compressor and the specialized hardware was designed and fabrication begun. Provision for the various pressure transducers and temperature sensors had been previously accommodated in the basic compressor hardware.

Dynamic test instrumentation will be essentially the same as in Proto 1 and will provide for measurement of dynamic pressures of both compression spaces and gas springs and also suction or discharge manifold pressures. Pressure transducers designed to withstand the engine pressure level of 80 bars have been ordered. In addition, the capability to determine dynamic compressor piston motion via LVDT readout has been added, having previously been utilized only on the ERC (Engineering Research Compressor). This letter measurement is important due to major changes in compressor parameters for Proto 2, i.e., stroke and piston area. Temperature sensors have been included within the suction and discharge manifold to supplement those at the compressor inlet and exit as well as external surface sensors like those used in Proto 1.

2.5.6 PLANNED ACTIVITIES FOR NEXT PERIOD

The Proto 2 compressor test plan will be completed within approximately two months, in preparation for the hardware delivery scheduled for the end of July. Following inspection and assembly, component testing will begin with completion scheduled in October, followed by assembly into the engine-compressor-combustor integrated test configuration. Testing of the tubular spring coil will continue through the next reporting period, in order to accumulate 2000 hours of operation (2.14×10^8 cycles), well past the knee of the curve for fatigue endurance of Almar 362.

2.6 CONTROLS

2.6.1 SUMMARY

The detailed design of the Proto 2 controls was completed during this reporting period. Schematic diagrams, assembly drawings, parts lists and wiring lists were generated from the concepts presented at the previous design review. Advanced order information resulted in expedited parts deliveries.

An automatic shutdown safety circuit was also designed to allow full time testing of the tubular spring.

2.6.2 CIRCUIT DESIGN

Figure 2-35 shows the block diagram of the circuits used to meet the Proto 2 controls requirements. The inputs for these operational and/or safety circuits are delineated as follows:

1. Operational Signals

   a. The thermostat signal is used to initiate heat pump operation.

   b. A switch on the thermostat will be used to select either the heating mode or cooling mode of operation.

2. Safety Signals

   a. A chromel alumel thermocouple and meter relay will be used to monitor fin temperature in the Stirling engine and the high temperature setpoint will trigger shutdown should the predetermined value be exceeded.

   b. A high pressure switch will monitor the compressor refrigerant discharge pressure level.

   c. A low pressure switch will monitor the compressor refrigerant suction pressure level. During defrost mode operation, when unusually low suction pressures may be expected, the low pressure switch signal will be disabled.

   d. A flow switch will monitor engine coolant flow and will be inhibited during the subsequentially stepped start up, to allow time for the pump to initiate the proper fluid flow.

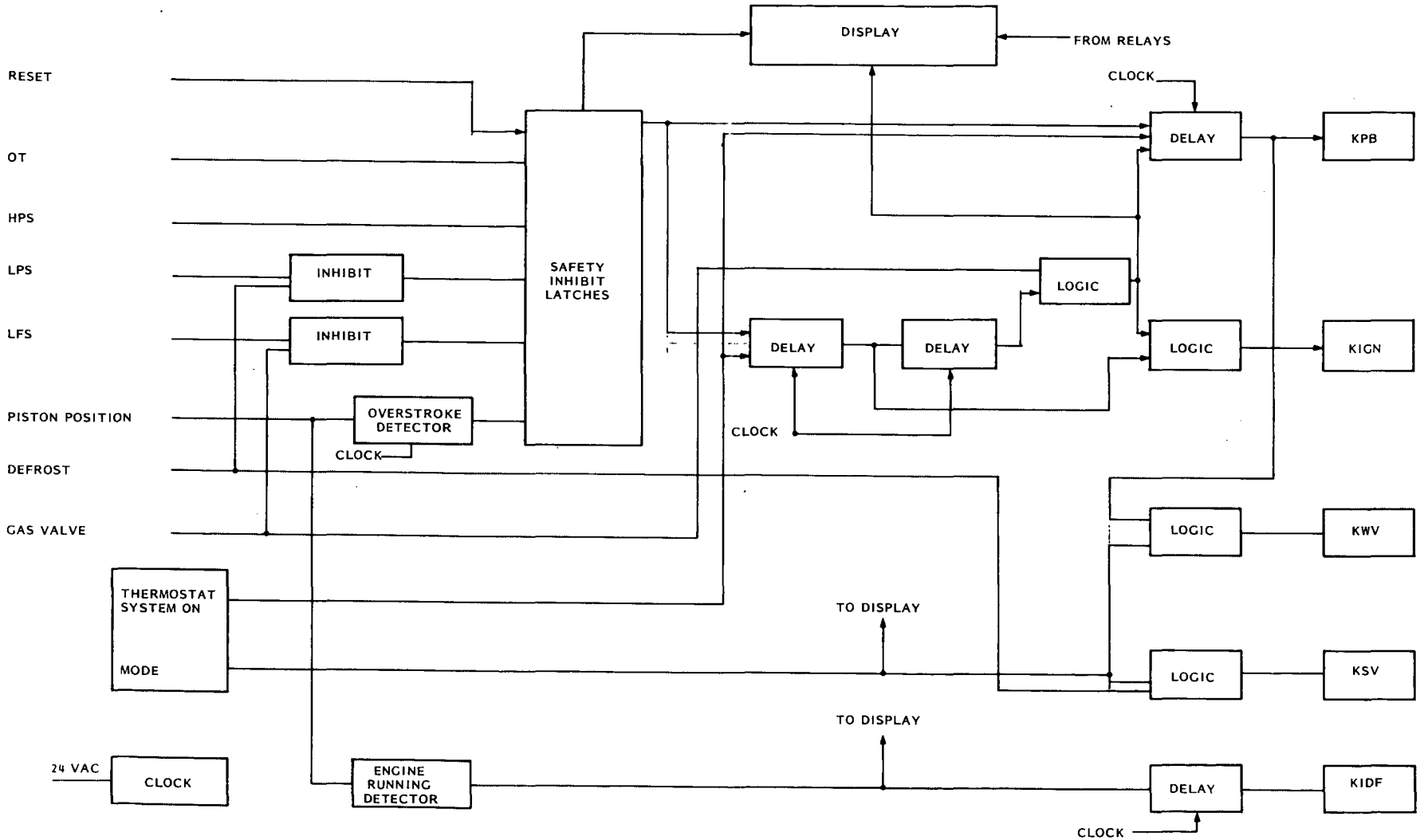

Figure 2-35. Controls Circuit Board Block Diagram

e. The piston position signal will be monitored to detect piston overstroke. This same piston position signal will also be used to detect engine start up which in turn will then turn "on" the indoor fan. This sequence will avoid fan operation before the engine/system is fully operational.

f. A signal from the defrost control will be used to inhibit the low pressure switch signal and to determine refrigerant switchover valve operation.

g. A signal from the gas control will be used to monitor ignition and also blower operation via the differential pressure switch. It is used as the time delayed signal for inhibiting the engine coolant low flow switch during start up. This circuit will shut down the pump, outdoor fan, combustor blower and gas valve in the event of ignition system lock out, while providing a convenient way of visually displaying the reason for system shutdown.

h. 24 volts AC powers all control circuits and will be used to provide a clock signal for the delay timers.

i. A reset signal will be used to reset the safety inhibit latches.

2.6.3 NORMAL CONTROLS OPERATION

The desired mode of operation, cooling or heating, will be selected by a switch on the room thermostat, with the thermostat set to the desired room temperature. When the thermostat calls for heat pump operation, the circuits will energize relay KPB. This relay powers the water and ethylene glycol pump for engine cooling and also powers the combustor blower motor and the outdoor fan motor. At the same time that KPB is energized, the ignition delay timer starts. This gives the blower time to purge the combustion chamber, time for the ΔP switch to sense combustor blower operation and time for the hydronic flow switch to sense pump operation. When the ignition delay timer has timed out, the ignition relay will be energized to spark the ignitor. The gas control is energized through the ignition control and the ΔP switch. If ignition occurs, the flame is sensed by the ignition circuit and normal engine warm up proceeds. If a flame is not sensed, the gas control is shut down. Relays KPB & KIGN will drop out after a time delay when this condition is sensed, allowing prescribed delayed operations to be completed prior to securing the circuit.

When the engine starts, as sensed by the piston position sensor, the indoor fan relay will be energized. This will prevent the indoor fan from being "on" during the engine warm up transient before the desired fluid conditions have been established.

The room thermostat system senses when the load has been satisfied and disables the ignition system. A delay timer will keep the pump and blower on during the engine shutdown to utilize the fluid energy and minimize cycling losses. Another timer will delay the turn off of the indoor fan after which the system will be in its stand-by mode awaiting another signal from the room thermostat.

Hydronic Valve Operation

A 3-way motor driven valve is used to select the sink for the engine coolant heat. In the heating mode, engine coolant is circulated through a hydronic coil in the indoor unit to supplement the heating from the refrigerant system. In the cooling mode, the coolant is circulated to the outdoor unit for discharge to the environment. This operation is summarized in Table 2-19.

Table 2-19. Hydronic System Operation

Heat Pump System Mode	Hydronic Flow Selection
Off	Outdoor Hydronic Coil
Heating	Indoor Hydronic Coil
Cooling	Outdoor Hydronic Coil

Refrigerant Switchover Valve Operation

This 4-way solenoid operated valve establishes the proper direction of refrigerant loop flow for either the heating or cooling mode as required. When the heating mode is called for, the valve routes the R22 refrigerant from the compressor discharge port directly to the indoor unit coil, where heat is released to the interior of the residence. The valve reverses the flow for cooling mode operation and directs the refrigerant from the compressor discharge to the outdoor unit first, where unwanted heat is rejected to the outside environment. In each case, the valve also conveys the return refrigerant flow back to the compressor suction port. The valve positions for normal system operation are given in Table 2-20.

Table 2-20. Refrigerant Switchover Valve Operation

Heat Pump System Mode	Valve Position
Off	Off
Heating	Off
Cooling	On
Defrost	On

Dual Firing Rate

The control system has been designed to accommodate dual firing rate combustor operation, both for gas flow and combustion air supply. Adjustable ambient temperature switches have been provided to select the high firing rate if the outdoor ambient temperature drops below approximately 35°F or goes above approximately 85°F. A relay will select the blower speed tap and one or both stages of the two stage gas control. For conditions in between the aforementioned temperature limits, the controls operate in the low firing rate positions.

2.6.4 POWER WIRING

All electrically powered components for the Proto 2 gas heat pump system have been designed to operate from a 230 volt ac power supply. These components include:

1. Outdoor fan motor
2. Engine Coolant Pump Motor
3. Combustor Blower Motor
4. Indoor Fan Motor
5. Defrost Control
6. 24 V ac transformer (controls power)

The power wiring circuit enters the outdoor unit through a conduit fitting on the interface panel of that unit. A junction box behind the interface panel encloses a terminal strip which connects the power feed wires to the internal heat pump circuits. From the junction box, the wiring is routed along the engine side of the vertical weather barrier structure which separates the refrigerant coil area from the engine area, terminiating at a power input connector on the fan orifice interface panel.

Relay and transformer connections are made on the orifice panel along with those to the defrost signal conditioning board and the power output connector. Power circuit wiring is segregated from the low voltage control circuits both at the controls area on the orifice panel and in the associated wiring harnesses in accordance with code requirements. The power output connector supplies the outdoor fan, the hydronic pump motor, defrost control, combustor blower and (via the power junction box) the indoor unit and its blower motor. Number 16 AWG wire is used for the internal power wiring of the outdoor unit in order to meet electrical code requirements.

A low voltage junction box, located behind the outdoor unit connection interface panel, accommodates control circuit interconnections via two terminal strips. These terminal strips are, in turn, connected via a wiring harness to the display panel and the orifice panel control components. Number 18 AWG conductors are used for these connections and they are bundled separately from any line voltage circuits.

2.6.5 OUTDOOR UNIT CONTROLS PACKAGING

The bulk of the controls components are located on the flat sheet metal surface of the orifice interface panel surrounding the actual fan orifice. This location provides the necessary protection from the outdoor environment. The controls components located here include the various functional relays, a 24 volt power transformer, dc power supply, terminal strips and the control circuit board. The 230 volt ac components are grouped in one corner of the available panel area with the low voltage components occupying the remainder of the available space. The majority of the small electronic components are mounted on a compact wire-wrap circuit board. Components associated with the dc power supply were located adjacent to the

interface connectors. The diode bridge and filter capacitor are mounted on a separate circuit board and the three-terminal voltage regulators are mounted directly to the orifice panel from underneath. The latter arrangement provides a large heat sink to the outdoor fan's circulated air.

Several of the control relays are mounted on brackets between the dc power supply and the line voltage components. Three of the larger relays are mounted directly to the orifice panel for heat sink purposes. The electronic ignition system and the combustor differential pressure switch are mounted on the sheet metal bulkhead adjacent to the engine. The defrost control and the dual firing rate temperature switches are also mounted on the engine side of the compartment barrier so that their sensing units can penetrate directly through to the refrigerant coil area.

The operational display panel contains 17 status indicator lights. It is located on the lower left side of the outdoor unit connection interface panel. These visual indicators make it possible to observe key functions in their normal operating sequence as well as to diagnose problems.

The indoor unit supplied by GE-Trenton will be used in its standard controls configuration without modification.

2.6.6 PROCUREMENT AND FABRICATION

Purchase orders for many of the key components and/or longer delivery items were placed in advance of completing the detailed schematics and circuits in order to expedite the schedule. The balance of the parts lists were placed on order shortly following formal drawing release. Deliveries were scheduled for August and September.

In addition to the electronic circuit designs, the mounting plan details and required component bracketry details were completed and released to the shop for fabrication. The pacing item in this block of work is expected to be the modification of the outdoor unit fan orifice panel assembly. This assembly is being purchased as part of the standard air handler equipment and will be expedited separately in order to support the control system work schedule.

2.6.7 PLANNED ACTIVITY FOR NEXT PERIOD

Breadboarding and circuit assembly will be initiated upon receipt of the control system components. During the next reporting period, the fabrication and assembly of the Proto 2 control system will be completed and testing commenced.

2.7 AIR HANDLERS

2.7.1 SUMMARY

The Proto 2 Air Handlers include:

1. The outdoor unit (ODU)
2. The indoor unit (IDU)
3. The appearance parts (cabinet)

During this reporting period, the design effort included materials definition, component selection, circuit layouts of both the hydronic and refrigerant loops, structural design of the base and frame, updating of the indoor unit design and design of the appearance parts. Component sizing and circuitry designs were based on current practive in the air conditioning industry and the results obtained during Proto 1 testing. The design incorporates improvements currently available in advanced commercial components and application techniques, insuring that the end product will be a mature design.

2.7.2 DESIGN REQUIREMENTS AND CHARACTERISTICS

The refrigerant loop design requirements were established for the cooling mode such that the unit will extract 35,000 Btu/hr at 95°F outside temperature conditions. The corresponding heating mode capacity was set at 26,000 Btu/hr for a 2°F outside temperature. In addition, the hydronic loop must reject 20,000 Btu/hr of engine waste heat to the outside air in the cooling mode, and 20,750 Btu/hr to the indoor environment at the 2°F outside air temperature design point during the heating mode. Specific performance parameter definition for the R-22 and ethylene-glycol/water mixtures are included in Table 2-21.

Design requirements for the indoor and outdoor units called for providing the desired capacities while approaching production unit characteristics with respect to size, handling, portability and installation. Test versatility must be maintained, along with adequate instrumentation for field evaluation.

Table 2-21. Performance Requirements

	O. D. Temp, °F	I. D. Temp, °F	R-22 Flow, LB/HR	Condenser Heat Delivered, BTU/HR	Evaporator Heat Removed, BTU/HR	Hydronic Flow, GPM	Engine Heat Removed, BTU/HR
Heating	2°F	80° DB 67° WB	250	26,000	16,200	2.2	20,750
	17°F	80°DB 67°WB	300	29,200	20,000	2.2	20,700
	47°F	80°DB 67°WB	295	27,300	21,300	2.2	12,900
Cooling	80°F	70°	400	34,000	30,000	2.2	12,700
	95°F *	70°	530	46,900	36,000	2.2	20,200

* Design Point

The indoor unit contains two space conditioning circuits, the hydronic loop (plate-fin coil multi-pass) and the refrigerant loop (split flow A-coil). The refrigerant loop contains the necessary thermal expansion and check valves to permit flow in both directions through the A-coil (condenser in the heating mode, evaporator in the cooling mode). Full instrumentation is provided to allow calculation of a heat balance between the refrigerant, hydronic and air side systems. The air handler cabinet is to be of commercial/residential quality with standard provisions for mating to a residential ducting system.

The outdoor air handler will also contain R-22 and hydronic loops with their attendant coils and valving circuits to enable operation in both the cooling and heating modes. The hydronic and refrigerant coils are to be designed in accordance with proven design parameters for standard GE spine fin tubing. The outdoor unit frame must support the combustor, Stirling engine, inertia compressor assemly, hydronic pump, expansion tank, electrical controls, sensors and the fluid circuit plumbing. Figure 2-36 shows the circuit diagram of the indoor and outdoor units.

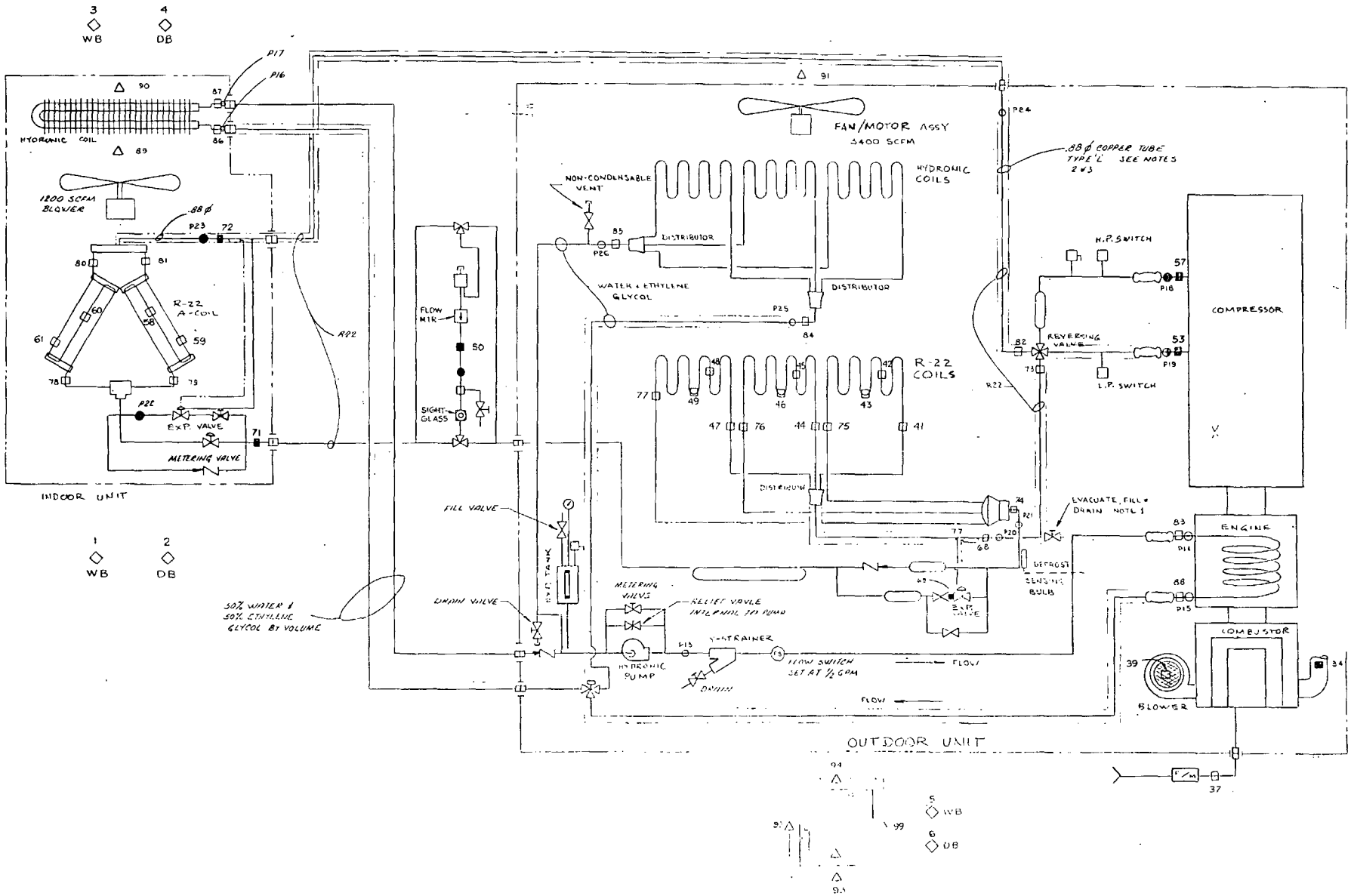

Figure 2-36. Air Handler Functional Diagram

The General Electric Company Industrial Design Operation (GE-IDO) in Louisville, KY was commissioned to design and fabricate the appearance parts for the selected outdoor unit configuration. The overall dimensions of the selected outdoor unit cabinet are shown in Figure 2-37. Additional design requirements set forth for the cabinet were as follows:

1. Esthetically pleasing and geometrically balanced design compatible with residential setting - (size, volume, color etc.).

2. Provide free air circulation to the coil compartment with a single upward discharge fan assembly.

3. Contain and/or minimize emitted noise levels generated in the equipment compartment.

4. All panels to be removable and lightweight to permit handling by a single service person.

5. Fasteners to provide for thermal expansion.

6. Engine compartment to be adequately vented but weather proof.

7. Provisions to be made for refrigerant, hydronic, electrical power and instrumentation interface connections at a single area.

2.7.3 AIR HANDLER DESIGN DESCRIPTION

During this reporting period, the design of the indoor unit was completed, design of the outdoor unit base and frame structure was completed, and detail design of the refrigerant and hydronic piping systems initiated. The outdoor unit cabinet features were selected from the several alternative appearance concepts and the resulting design and fabrication cycles initiated at GE-IDO.

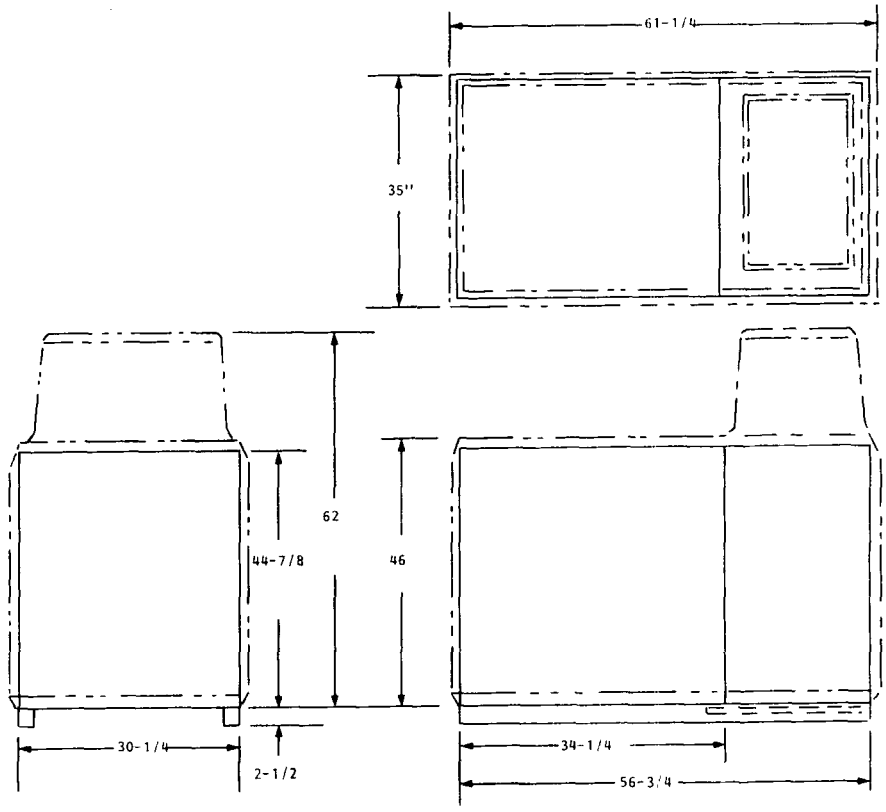

Figure 2-37. Outdoor Unit Cabinet Configuration

Indoor Unit

The indoor unit utilizes the latest high efficiency 3-ton air handler built by GE-Central Air Conditioning, Trenton, NJ, - Model #BWE 936C100A0. This standard unit is modified by adding the required hydronic coil at the top of the cabinet on the air discharge side of the refrigerant heat exchanger. The unit is a direct drive (1/3 HP motor) air handler suitable for horizontal or vertical installations. Access panels are conveniently located for servicing, while edge-slot knock-outs permit easy assembly of the quick attachment refrigerant line couplings and electrical power connections. A 24 volt (secondary) transformer and associated low voltage terminal board are provided for control system functions. An expansion valve with an adjustable superheat feature is provided in the A-coil manifold for purposes of system "tuning". A standard replacement filter is located in the air return side to remove air borne particulates. The high efficiency blower is rated to deliver 1200 scfm of air flow over a range of external static pressures from 0.26 to 0.36 inches of water. The cabinet is

insulated to minimize thermal losses and attenuate internally generated noise. The final indoor unit design is depicted in Figure 2-38.

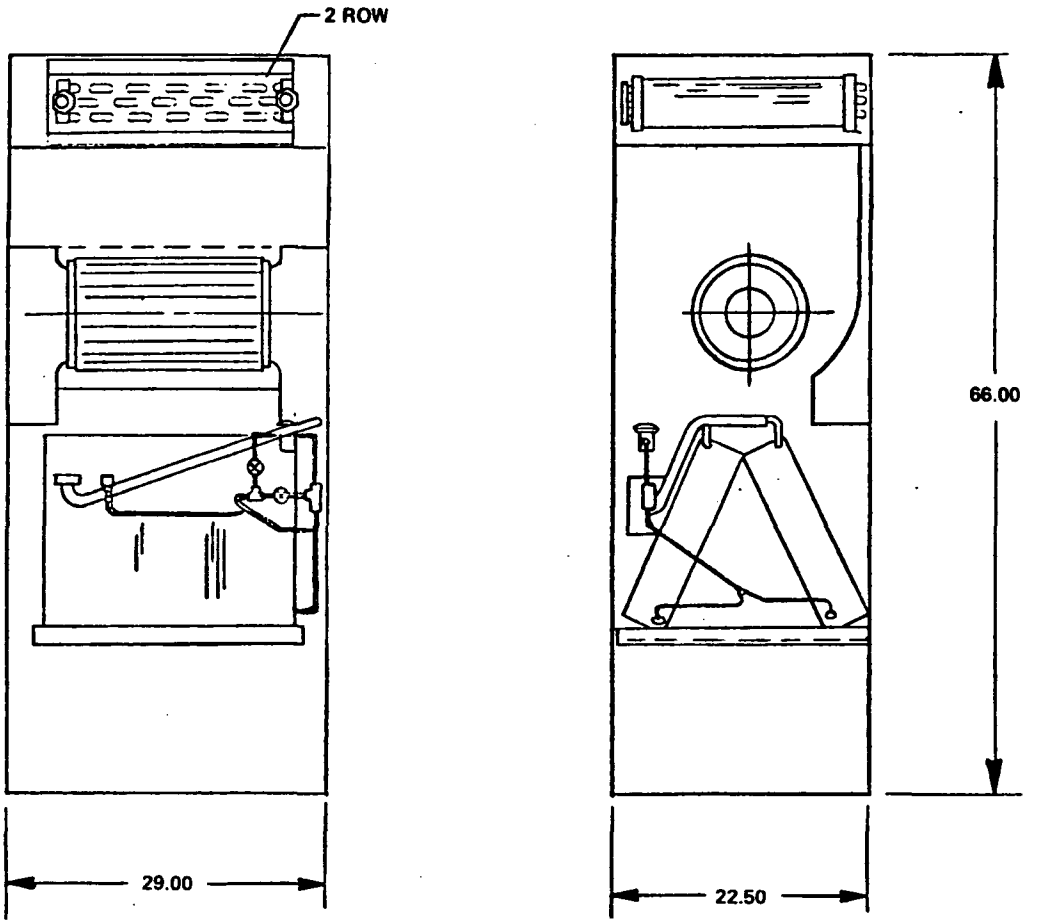

Figure 2-38. Proto 2 Indoor Unit (GE Model BWE936C100AO)

Outdoor Unit Frame Assembly

The outdoor unit design for this application departs from the standard commercial outdoor unit configurations in that it contains a separate rigid structural frame. This is in contrast to conventional outdoor units where the sheet metal cabinet panels function as self-supporting structural members. The driving factors in this design were the size, weight and modular concept of subsystems, coupled with the desire to utilize plastic materials for a futuristic product cabinet design.

The structural frame fits on two rails (rectangular tubes), which permits lifting of the assembled unit by fork lift at the engine compartment end (the assembly C.G. is on that side). The horizontal structure connecting the two rails is made of angle iron forming a "picture frame" arrangement, to which the vertical corner posts are welded. Top rails and interconnecting members are bolted together to facilitate component installation and handling. As seen in Figure 2-39, the frame forms a rigid, protective support structure for the refrigerant and hydronic loops. The frame is to be primed and painted with corrosion resistant black paint. Bolt holes, brackets and clips are provided for mounting equipment, piping and cabinet panels on the frame.

The structure is divided in two compartments as illustrated in Figure 2-39. One houses the refrigerant and hydronic coils, fan assembly, controls and interface panels. The other is the mechanical/engine compartment and contains the combustor/engine/compressor assembly, gas system, hydronic and refrigerant piping circuits, control valves and hydronic circulation pump. The engine compartment is isolated from the coil compartment by a sheet metal partition to both minimize noise escaping from the engine compartment and provide weather protection. For this reason, the solid cabinet panels forming the other three sides of the engine compartment, as well as the appendage cover, will be lined with noise absorbing material and their seams will interlock to protect against intrusion of the elements.

Outdoor Unit Cabinet Design

The cabinet was designed to esthetically enhance the outdoor air handler appearance through geometric balance and styling and to provide the necessary acoustic barrier without interfering with the cooling and combustion air flow to the coils and engine respectively. Based on prior experience in a similar application, Kydex 100 was selected as the material of construction for the cabinet panels. The material is weather and fade resistant, can be through-colored by the addition of the selected pigments, and will accept paint readily. It can be easily heated and vacuum formed or shaped mechanically using mass production or model shop techniques. It will remain structurally sound over the range of environmental temperatures to which a typical heat pump may be exposed. Although Kydex 100 possesses a higher thermal expansion co-efficient than steel, it will tolerate considerable elastic deformation.

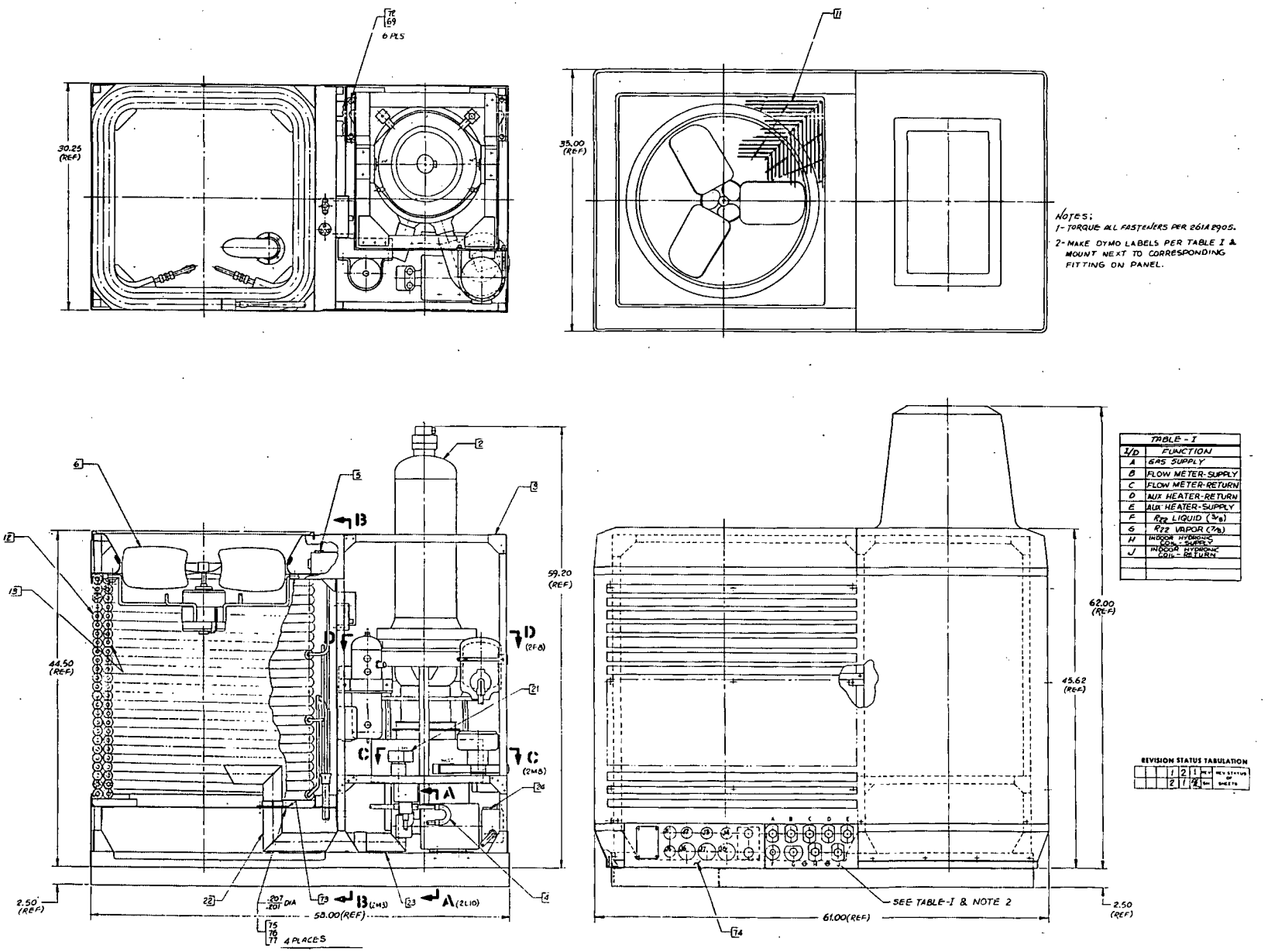

Figure 2-39. Outdoor Unit Assembly

However, the panel to frame attachments were carefully considered to allow for the differential motion.

The selected design was one of several concepts prepared by GE-IDO. It features a set of ten individual parts - four vertical panels, two top covers and four skirt panels along the bottom. The panels and attachments were designed to be manageable by one person of modest physical stature. The side and end panels adjacent to the coil compartment are louvered to admit air into the heat exchangers. Engine compartment panels are solid to provide environmental protection and to limit the noise emanating from the engine compartment. Of the two top covers, the lower, flat section is located over the fan and contains the grille (fan guard). The taller "top-hat" like appendage cover is necessitated by the vertical height of the engine/compressor assembly. This appendage cover is vented to prevent accumulation of any gases (freon, helium, natural gas and products of combustion) and to allow entry of fresh combustion air. Where the fan and appendage covers meet, an over-lapping joint with a channel arrangement is provided to carry the rain water over the side of the unit and seal the "controls volume" on the underside.

Acoustiguard (TM), a sound absorbing material, will be applied to the inner surface of the panels surrounding the engine compartment. Warping of these panels resulting from differential thermal expansion between the steel frame and the Kydex material will be minimized by the use of Tinnerman clips (expansion joints) at all attachment points.

Fan/Motor/Orifice Assembly

A review of existing fan/motor/orifice assemblies was made to match the required design performance specified for this unit, i.e., 3400 scfm, at 0.15 inch water, and less than 400 watts maximum power consumption. It was found that the "Executive" line of 3-ton heat pumps, built by GE in Tyler, Texas, utilizes a fan/motor/orifice assembly that closely matches the requirements. This assembly was accordingly specified in this application and is shown in Figure 2-40. The space formed by the sheet metal, external to the orifice, was used advantageously to package the bulk of the heat pump controls.

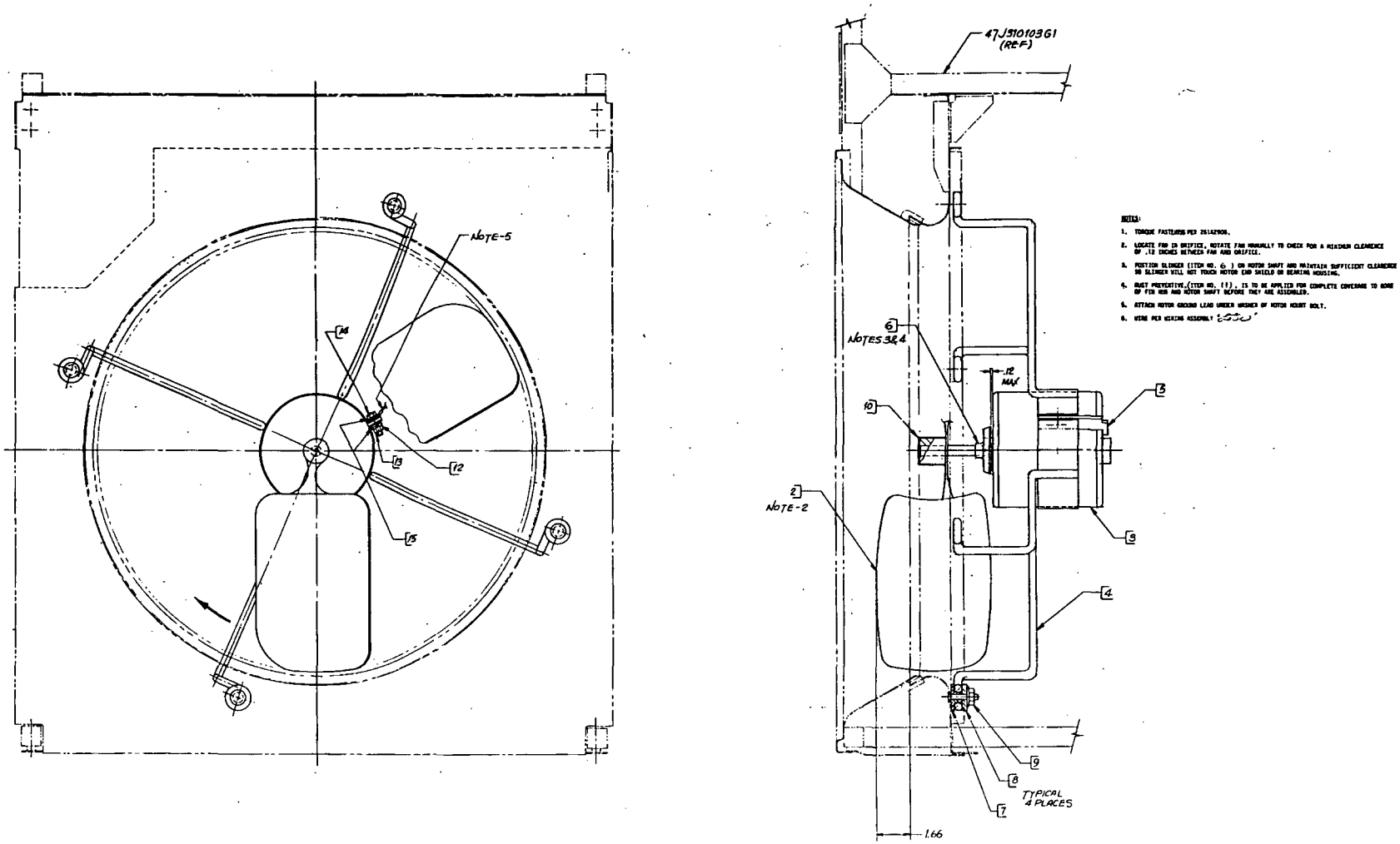

Figure 2-40. Motor and Fan Installation

Refrigeration Loop

The basic elements of the refrigeration loop are shown in Figure 2-41. The indoor portion of the R-22 loop was specified as part of the indoor air handler and consists of a plate fin A-coil heat exchanger configuration, an expansion valve, a check valve for summer-winter flow control and a two-way distributor at the outlet of the expansion valve. The coil and expansion valve were sized and selected to deliver 3 tons of cooling at the 95°F standard day conditions.

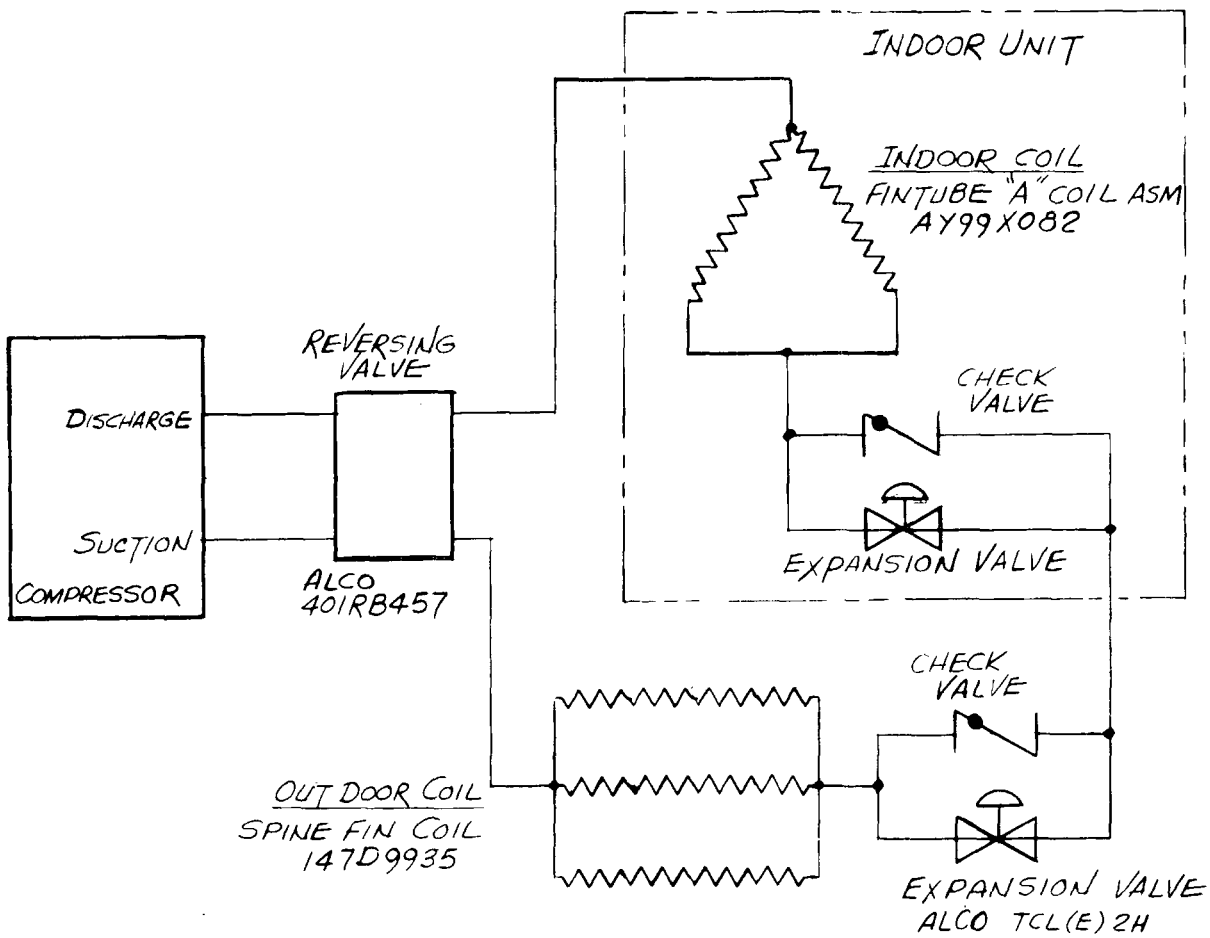

Figure 2-41. Refrigeration Loop

The outdoor unit contains a spine fin coil made of three parallel sections, an ALCO TCL(E) 2H expansion valve with a three-way distributor at the outlet, and a Superior check valve 802A-65 for summer-winter operation. A reversing valve, ALCO 401RB457, is provided at the interface between the compressor and refrigeration loop to permit selection of either heating or cooling modes of operation.

For summer operation (cooling mode), the high temperature and pressure discharge flow from the compressor is delivered via the reversing valve to the outdoor coils which act as a condenser (extract heat from the freon). The condensed (liquid) freon is delivered to the indoor coil through the expansion valve where it flashes into vapor, absorbs heat from indoor air and exits the evaporator slightly superheated. This superheated vapor is subsequently delivered to the compressor via the alternate ports of the reversing valve. The coils have been designed for condenser sub-cooling and evaporator superheat levels of 3 - 9°F.

For winter operation (heat mode) the reversing valve is switched and thereby delivers compressor discharge flow directly to the indoor coil where the vapor is condensed giving up its heat to the house. The exiting sub-cooled fluid is delivered to the outdoor coil, where it flashes into vapor at the expansion valve, absorbs heat from the outdoor environment and returns to the compressor through the reversing valve.

Both the indoor and outdoor expansion valves are located upstream of their respective coils with their temperature sensing thermal expansion bulbs located on the coil discharge lines downstream of the manifold to control the superheat level of the exiting freon. The respective expansion valves' pressure feedback capillary is tapped into the line adjacent to the sensing bulb to assure close pressure and temperature correspondence. To assure equal flow through the three coil sections of the outdoor coil in the heating mode, the distributor is located on a vertical centerline, discharging downward which tends to eliminate any gravity bias when the flow is split three ways. The outdoor coil has been designed to provide a condensing capacity of 48,000 Btu/hr. The coil was intentionally oversized to afford greater versatility in testing. All interconnecting piping was fabricated using Type L copper, dehydrated refrigeration tubing with 7/8 inch nominal diameter for the vapor lines and 3/8 inch for the liquid lines.

Hydronic Loop

The hydronic loop carries the waste heat from the Stirling engine cooler and delivers it to either the indoor unit during the heating season or to the outdoor unit in the cooling mode. A 1/6 HP Tuthill pump serves to circulate the water through the loop while a Honeywell solenoid operated 3-way valve directs the hydronic flow to the proper coil. The pump is a positive

displacement, rotary gear pump delivering 3.1 gpm at 1750 rpm against any head from 0-500 psi. Since the design flow in this application is 2.2 gpm, a bypass valve has been provided to permit flow adjustment through the engine at the specified level.

Within the outdoor unit, the spined fin hydronic coil is located inside the refrigerant coil assembly, such that the ambient air first passes over the refrigerant coil and then over the hydronic coil. The coil on the indoor unit is a standard plate-fin type, multipass coil made by GE.

The fluid used in the hydronic loop is a mixture of 50% water and 50% ethylene glycol by volume. This mixture offers an acceptable range of operating temperatures and is compatible with the engine cooler and pump requirements. An expansion tank and a pressure relief valve have been included in the hydronic loop to accommodate volumetric changes of the fluid with temperature and provide over temperature protection.

Combustor/Engine/Compressor Interface

There are several interfaces between the outdoor air handler and the combustor/engine/compressor assembly: structural supports, hydronic fluid lines, refrigeration lines, natural gas connection and combustion air supply and exhaust (see Figure 2-39). The first and primary interface is the support structure. The combustor/engine/compressor assembly is spring mounted to a tripod stand assembly which in turn is bolted to the bottom part of the frame. Flexible hose is used to connect the engine to both the refrigerant and hydronic loops. This prevents any transmission of engine/compressor assembly vibration into the fluid systems. Hose materials have been carefully selected for the respective service-fluids carried, flexibility, and pressure and temperature range characteristics.

Gas is supplied to the stationary combustor via a dual stage gas regulator and control valve through interconnecting copper tubing. A blower provides filtered air to the combustor at either of two flow rates for high and low firing schedules. Air flow control is accomplished by restricting the blower inlet area by means of a solenoid operated flapper. Exhaust gases are ducted from the engine compartment into the coil compartment, mixed with air flow from the heat exchangers, and are subsequently exhausted to the atmosphere by the outdoor fan.

Instrumentation and Control Circuits

Both air handler units are fully instrumented to assure safe, reliable operation and to provide appropriate performance data. The refrigerant loop contains an overpressure switch at the compressor discharge and a low pressure switch in the suction line. Both of these will shut down the operation when the respective pressures go outside the operating regimes. The over pressure switch is set to actuate at 400 psig, while the low pressure switch (which guards against loss of refrigerant) is set at 3 psig. Both switches are made by Texas Instruments specifically for heat pump applications. A relief valve in the compressor discharge line is set to open at 450 psig if pressures continue to rise past the high pressure switch setting. In the hydronic loop, a flow switch will shut down the heat pump when the engine coolant flow falls below 0.5 pgm. The hydronic pump also contains an integral relief valve which is set at 60 psig to protect the unit from "dead heading" conditions. High and low level sight glasses and a pressure relief valve on the hydronic expansion tank permit proper charging and protection against over-pressurization of the hydronic system. A flame detector circuit has been incorporated into the combustion system to maintain the gas valve in an open position as long as the sensor detects the presence of a flame. Should the flame go out or shift away from the flame holder, the gas valve will be closed immediately. On start-up, the gas valve operation is locked out unless there is a flow of combustion air during the required purging cycle.

2.7.4 PROCUREMENT AND FABRICATION

Procurement of long lead items was initiated during this reporting period. The hydronic pump, all instrumentation, the hydronic three-way valve (Honeywell), reversing and expansion valves (ALCO), outdoor fan assembly, expansion tank, muffler, check valves, relief valves, distributors, strainers, coils, dryers and tubing were selected and ordered. The detailing of the hydronic and refrigeration loop piping was initiated. These are stock items and can be procurred from any refrigeration/heating system supplier. Raw material for the base and frame has been received and fabrication of these parts is underway at GE-Valley Forge. Kydex 100, the plastic material for the cabinet, has been delivered to GE-IDO in Louisville, KY. Fabrication of the appearance parts has been initiated, with delivery scheduled for September.

2.7.5 TESTING

Testing of the air handler will be accomplished at several levels:

1. Component Test
2. System Test
3. Field Evaluation Test

Air handler performance mapping and optimization will be accomplished during component testing. This will include measurement of parasitic power consumption, optimum charge level determination in the heating and cooling modes, and performance optimization. The tests will be run at the following conditions using an electrically driven calibrated compressor.

Outdoor Ambient	Indoor Ambient
Heating 47°	70°F
17°	70°F
Cooling 95°F	80°F D.B., 67°F W.B.
80°F	80°F D.B., 67°F W.B.

To assure reliable and accurate test results, it is planned to fully instrument the unit for the component test. Measurements will be made of flow, temperature and pressure conditions throughout the R-22 and hydronic loops, as well as the respective air systems.

In the system test, the air handlers that have been performance mapped and defined during the component test, will be mated with the combustor/Stirling engine/inertia compressor assembly. The characterized air handlers then become part of the required test facility to measure the performance of the combustor/engine/compressor in combination with the air-side heat exchangers. A set of instrumentation drawings is currently being prepared specifically for the system test. These drawings will be issued during the next reporting period.

In planning for the above tests, provisions are being made for instrumentation that is to be used in the field evaluation unit. It is anticipated that existing temperature and pressure taps will be sufficient to accommodate the field instrumentation requirements.

2.7.6 PLANNED ACTIVITY FOR NEXT PERIOD

During the next reporting period, fabrication and assembly of the air handlers will be completed. The outdoor unit's air handler will also be mounted to the frame assembly. Based upon current scheduling, this work will be completed and component testing will be initiated in November.

2.8 PROTOTYPE 1 EXPERIMENTAL COMPONENTS

2.8.1 SUMMARY

Experimental verification of Proto 2 component designs using the existing Proto 1 test hardware was initiated in the last reporting period. The objective of this effort was to reduce risks in the Proto 2 development cycle. The second gas spring concept for the power piston was tested in this reporting period. The test results provided an in-depth understanding of this concept. Tests of the improved regenerator design were not conducted due to difficulty in retrofitting the improved regenerator components into the existing Proto 1 engine. Detailed descriptions of these activities are given in the following paragraphs.

2.8.2 SECOND GAS SPRING TESTING

To improve Proto 1 system performance and verify the Proto 2 engine design concept, an experimental second gas spring was tested. The engine/compressor assembly was successfully operated with this design modification; however, performance was lower than predicted. Analyses of test results indicated that additional damping introduced by the retrofit nature of the second gas spring reduced performance of the assembly. The Proto 2 engine will feature a second gas spring that is an integral part of the engine design, and is not expected to have the shortcomings experienced with the retrofitted second gas spring.

Second Gas Spring Description

The second gas spring was designed as a retrofit to the Proto 1 hardware. It acts to increase the spring stiffness acting on the power piston with a resultant increase in operating frequency.

Figure 2-42 shows the layout of this design as retrofitted on top of the Proto 1 engine pressure vessel. The second gas spring volume consists only of the upper volume above the piston; stiffness of the lower volume spring was reduced by drilling multiple holes through the presure vessel flange to connect the lower volume of the gas spring and the bounce space volume within the pressure vessel.

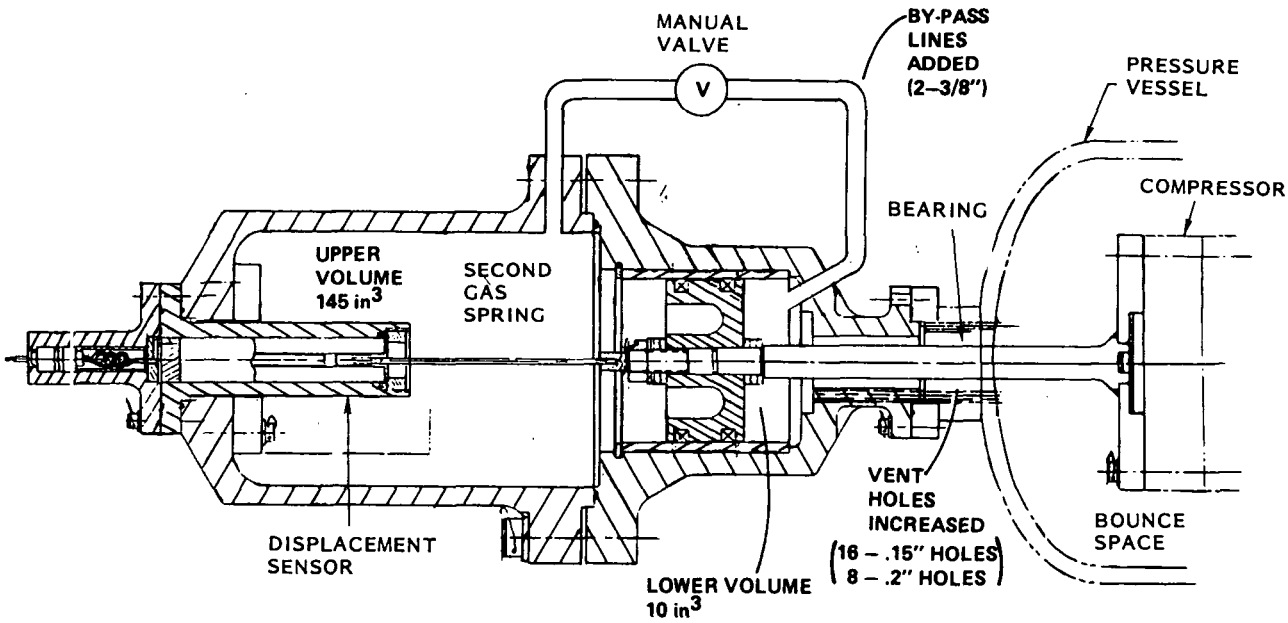

Figure 2-42. Second Gas Spring Design

The second gas spring was designed to allow flexibility of spring parameters with a piston diameter range of 2.75 to 3.25 inches (5.94 to 8.3 in.^{2}) and a volume that could be varied from 110 to 145 cubic inches. Two bypass lines with manual valves were included to provide the option of softening the second gas spring. The configuration was sized to provide the Proto 1 unit with an operating frequency of 25 to 28 Hz, depending upon the compressor piston assembly mass selected. This represents an increase from previous values of 22 to 25 Hz.

Component design was completed, hardware was produced, and the detail parts were received during the latter part of 1978. A photograph of the second gas spring components is shown in Figure 2-43. Assembly of the second gas spring hardware to the Proto 1 unit was completed in January, 1979. Figure 2-44 shows a photograph of this assembly retrofitted to the existing Proto 1 hardware.

Test Results and Analysis

Early difficulty was encountered in starting the Proto 1 engine with the second gas spring. After a starting technique was developed the unit was successfully tested. However, performance was less than expected due to damping introduced by the retrofit nature of the

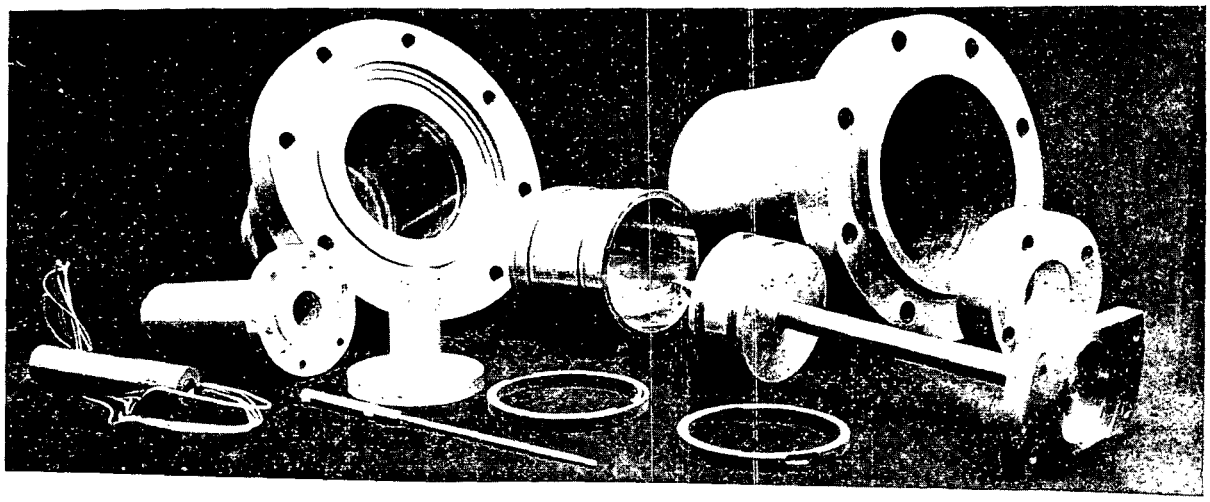

Figure 2-43. Proto 1 Second Gas Spring Hardware

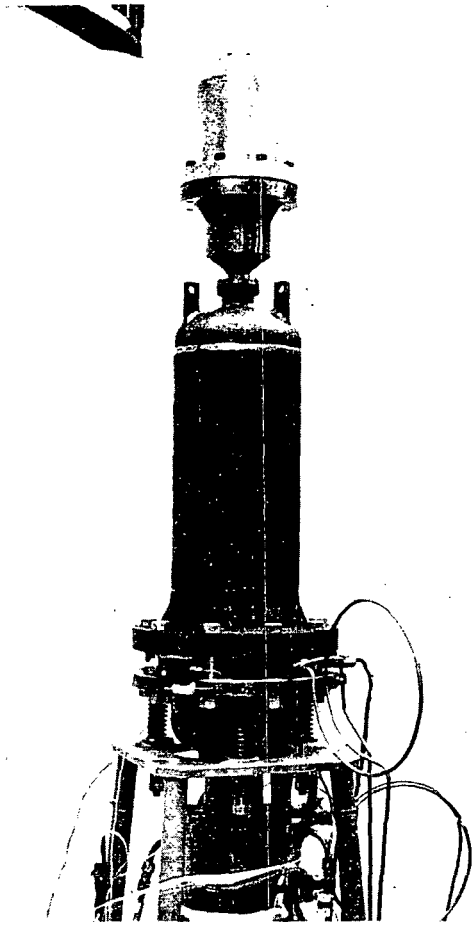

Figure 2-44. Proto 1 Free Piston Stirling Engine/Compressor/Second Gas Spring Assembly

second gas spring. This damping reduced efficiency and also resulted in a mismatch of engine components. Performance could have been improved with a larger displacer rod area and spring volume, but these requirements were beyond the capability of the current Proto 1 hardware and further testing will be conducted on the Proto 2 hardware with an integrated second gas spring configuration.

Tests with the initial second gas spring configuration indicated a stiffer spring than desired, the result being that sustained engine operation could not be achieved. This sensitivity to spring stiffness was predicted by simulation, as shown in Figure 2-45. As the second gas spring volume is reduced, with a corresponding increase in stiffness, little or no piston motion is predicted, as engine/compressor operation shifts from the first to the second harmonic.

Two bypass lines with manual valves were therefore added to interconnect the upper and lower gas spring volumes, providing a means to soften the second gas spring. Testing with both bypass valves open resulted in steady engine operation, but at a low operating frequency. Attempts to close one of the two valves resulted in stalling the engine. Trends of engine stroke and frequency illustrating this result are shown in Table 2-22. Analysis of the test data indicated that two major effects were influencing engine operation with the second gas spring as designed: excessive damping and higher than desired gas spring stiffness.

With both bypass valves opened, gas was shuttled between the upper and lower volumes of the second gas spring. This caused a significant damping effect on the piston motion and, consequently, operation at low frequencies. When the small damping effect of the vent holes connecting the lower gas spring volume and the bounce space is added to the bypass line damping, the total damping effect was estimated to be approaching the critical level. Thus a slight increase in the flow restriction caused by closing one of the manual bypass valves resulted in engine stall.

Results of the bypass line tests did not fully explain the failure to maintain motion with the original second gas spring configuration. In order to determine whether the presence of

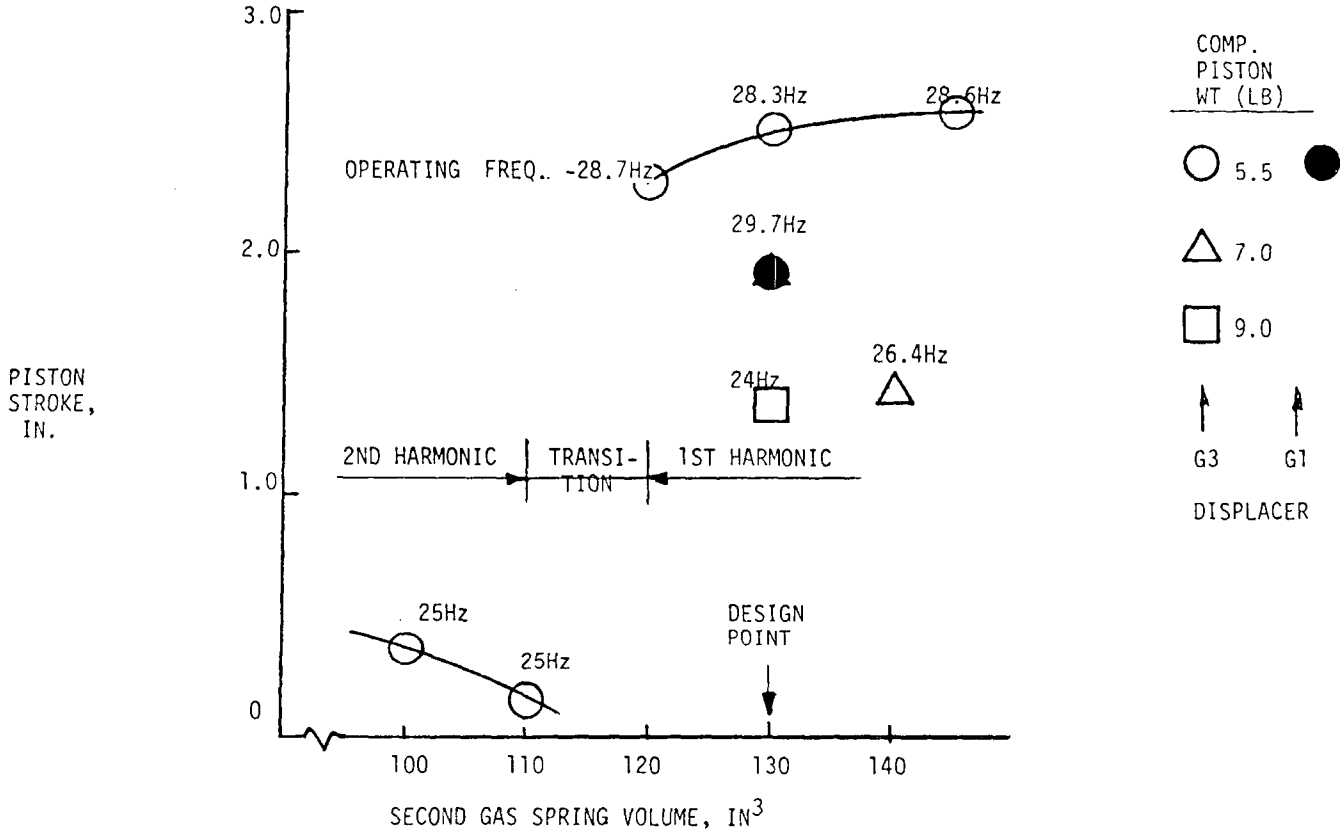

Figure 2-45. Predicted Proto 1 Operation with Second Gas Spring

Table 2-22. Initial Test Results with Second Gas Spring*

	Stroke (IN.)	Frequency HZ
Computer Prediction without additional damping (both valves closed)	1.5	28
Test with both valves open	1.0	19.8
Test with one valve open, one valve 1/4 closed	0.7	19.1
Test with both valves closed	Engine Stall	

*40 kBtuh (LHV) Firing Rate

the lower volume resulted in a stiffer spring than originally designed for, pressures were measured at both the upper and the lower volume. Figure 2-46 shows the measured pressure history of a cycle with both bypass valves opened. The lower volume experienced a $\Delta P = \pm 10$ psi variation which was significantly higher than the ± 2 psi anticipated. It was apparent that the lower volume was also adding a spring effect and led to a stiffer gas spring than anticipated.

With the additional spring effect from the lower volume, the equivalent gas spring volume for the second gas spring has been reduced to 115 in.^{3} from 145 in.^{3}. According to the simulation results presented in Figure 2-45, the current configuration falls in the transition zone between the 1st and the 2nd harmonic, and will not operate as designed.

To operate the current configuration in the 1st harmonic region, as intended, the existing second gas spring must be made softer without introducing additional damping. To accomplish this, a smaller diameter second gas spring piston and associated hardware was

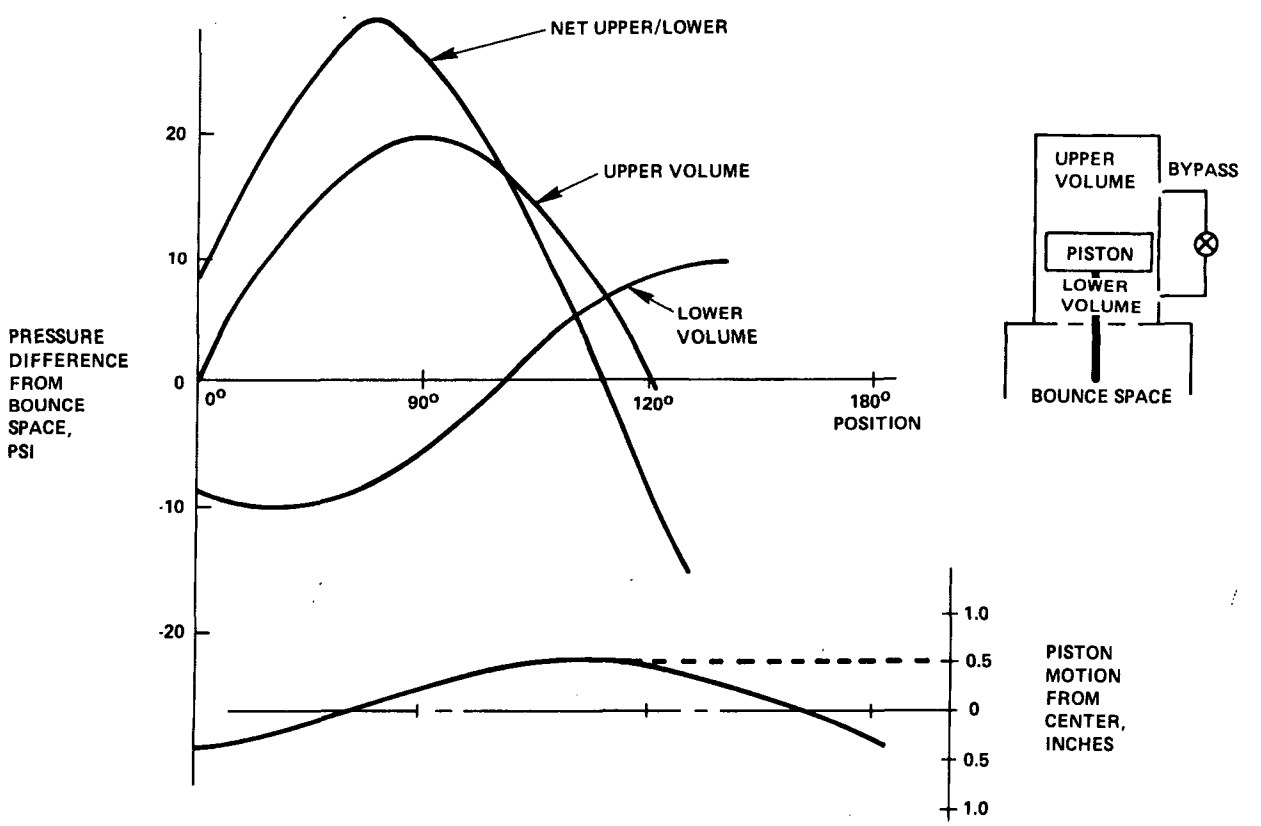

Figure 2-46. Proto 1 Second Gas Spring Pressure and Displacement Test Data

fabricated. The modified piston diameter was 2.75 inches (5.93 in.^{2}), providing a 28% reduction in cross-sectional area. The smaller diameter second gas spring piston/liner/seal ring components were assembled into the Proto 1 engine, along with an improved displacer centering port timing feature. Tests with this configuration were successfully completed. Table 2-23 shows the test configuration parameters.

The test was conducted on the integrated test stand. Heating capacity measured was 32.9 kBtuh and the corresponding system thermal COP was 1.0, based on water loop measurements with 72°F water entering the outdoor coil. Engine efficiency was 13%, compressor power output was approximately 0.9 kW and combustor efficiency was 73%. These results are less than expected, based on initial performance simulation, as shown in Table 2-24.

The second column of Table 2-24 shows performance predictions made with the computer simulation, assuming that losses would be equal to those previously experienced on Proto 1 with no additional damping from the retrofitted second gas spring. The lower strokes

Table 2-23. Proto 1 Second Gas Spring Test Configuration

As Tested on 3/14/79
BLD 3-47

Charge Pressure	1180 PSI
Engine Bore	3 IN.
Displacer Gas Spring	
Area	0.78 IN.^{2}
Volume	6.32 IN.^{3}
Second Spring	
Area	5.93 IN.^{2}
Volume	145 IN.^{3}
Component Masses	
Displacer	2.1 LB
Piston	31.9 LB
Compressor	5.5 LB

experienced indicates that the system damping has exceeded the Proto 1 level. Increasing the damping factor in the simulation resulted in good matching of the data, as shown in the third column of Table 2-24. This additional damping, as discussed previously, is attributable to the flow throttling losses at the vent ports required in the retrofit hardware. This damping not only reduced engine efficiency but also caused a mismatch in engine components that further reduced performance. Further analysis revealed that substantially better performance could be obtained with a larger displacer gas spring area and volume. Unfortunately, a larger displacer gas spring is not possible in the Proto 1 hardware.

The critical damping effect experienced in the Proto 1 retrofit second gas spring test is not anticipated with the Proto 2 design where the second gas spring has been integrated into the engine design. The second gas spring volume is a completely enclosed cavity with minimal flow throttling losses.

Since analyses of the experimental second gas spring tests indicated that Proto 2 performance goals can be achieved with an integrated second gas spring design, further testing of the retrofit hardware was deleted, and activity focused on preparation of the Proto 2 engine design.

Table 2-24. Comparison of Proto 1 Second Gas Spring Test Data to Computer Simulation (5.5 lb Compressor)

	Test Data	Simulation Analysis	
	Proto 1 Second Gas Spring 3/14/79 BLD 3-47	Initial Performance Simulation (Losses Assumed Equal to Proto 1 with no Additional Damping from 2nd Gas Spring)	Post Test Simulation Damping Factor Adjusted to Match Performance Test
Piston Stroke, IN	1.38	1.66	1.30
Displ. Stroke, IN	1.55	1.89	1.48
Operating Freq. HZ	23	25	24
Heater Tube Temp °F	1260	1260	1260
Firing Rate, KBTUH	33	53	36
Compressor Power, KW	0.9	2.8	0.9
Engine Eff, %	13	27.4	11.7

2.8.3 IMPROVED REGENERATOR

Refurbishment of a Proto 1 free piston Stirling engine housing assembly with Proto 2 type regenerators and heater head subassemblies was attempted in order to provide test verification of the Proto 2 configuration. However, during brazing operation, the temperature profile was increased too quickly and some level of contamination was present. This resulted in the brazing alloy becoming liquid before the heavier hardware sections reached the proper temperature level, and the process yielded discrepant joints. Also, the surfaces of the parts exhibited tell tale films of residual levels of contamination. A 60 psig pressure check revealed multiple leaks at the heater head tube/cylinder head interface.

An investigation was conducted to identify a plan to repair the hardware. The conclusion was that the existing braze joints cannot be satisfactorily repaired and that further effort was not justified.

Improved Regenerator Configuration

The Proto 1 regenerator assemblies depicted in Figure 2-47 were designed to provide the capability of removing the cap to replace the matrix materials. Six matrix disks comprised the total subassembly and were contained within a thin wall cylinder. This matrix cartridge could then be inserted into the body of the regenerator, the cap positioned, and subsequently seal welded closed.

This design required a relatively thick walled body compared to a cylindrical shape housing. The loss penalty for this feature on the Proto 1 design was the larger heat losses summarized in the first column of Table 2-25.

A cylindrical regenerator configuration was selected for the Proto 2 engine. Thin housing walls were designed and the cartridge sleeve was eliminated. Therefore, the predicted heat losses are significantly reduced. However, this design necessitated a sacrifice of flexibility to remove the matrices without removing the heater head assembly. The heat loss calculations for the modified design are shown in the second column of Table 2-25 indicating the reduction in losses. To verify predicted losses, one set of regenerators (12 units)

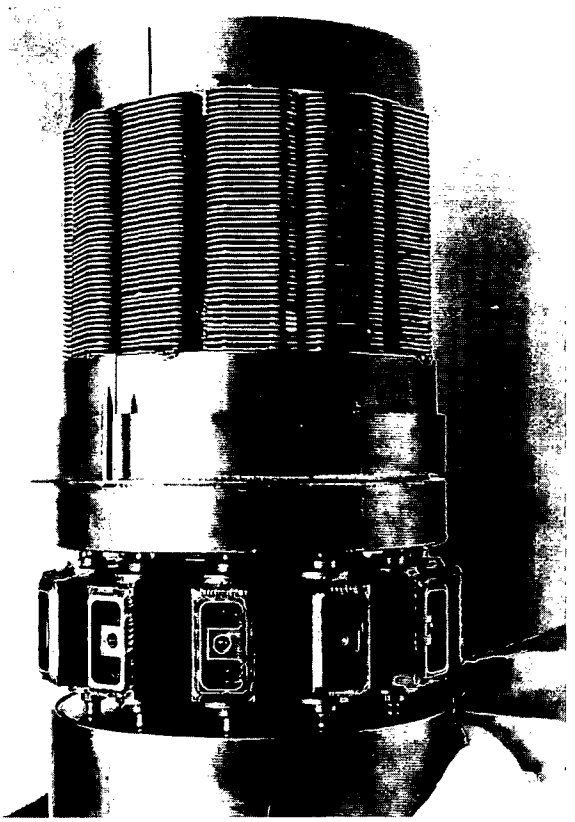

Figure 2-47. Proto 1 Regenerators Assembled into the Engine Housing Assembly

Table 2-25. Regenerator Energy Loss Summary

Energy Losses	Flexible Proto 1 Design	Tailored Proto 2 Design
Axial Wall Conduction, W	276	180
Axial Matrix Conduction, W	27	27
Radial Conduction, W	910	310
Flow Leakage, W	300	0
Totals, W	1513	517

was fabricated and retrofited into a Proto 1 engine housing. Figure 2-48 is a photograph of the Proto 2 regenerator assembly and the internal matrices.

Regenerator Fabrication/Assembly

The regenerator components were fabricated and assembled into a Proto 1 engine housing. As in previous engine builds, precautions were taken to carefully clean the parts, especially the interface areas. Nickel alloy braze procedures were conducted and the assembly was subsequently inspected.

The completed brazed assembly did not resemble any previous unit. A residue was evident over most of the housing surface. The residue, coupled with color changes of base metals, indicated that the surface had oxidized during the braze cycle. Either the furnace atmosphere had been contaminated with oxygen and water vapor or oxygen contained within the surfaces of the previously tested housing had reacted with the metal during brazing.

In addition to contamination, the brazing temperature had been raised too quickly, thus permitting the braze alloy to become fluid before the heavier engine parts could reach the required brazing temperature levels. The brazing alloy did not fill the joints properly and could have resulted in poor structural and pressure containment integrity. A pressure test was conducted with nitrogen gas at a relatively low level of 60 psig. Several joints were found to be leaking.

The regenerators could not be removed for repair without cutting off the adjacent tubes. The remaining tube ends were too short and could not be properly prepared for the next assembly. No acceptable repair could be identified short of removing and replacing all heat exchanger subassemblies - heater head tubes, regenerators, cooler tubes and cooler containment sheet metal. Since the additional work was beyond the scope of the Proto 1 development effort, evaluation of the desired regenerator configuration was deferred to the Proto 2 test program.

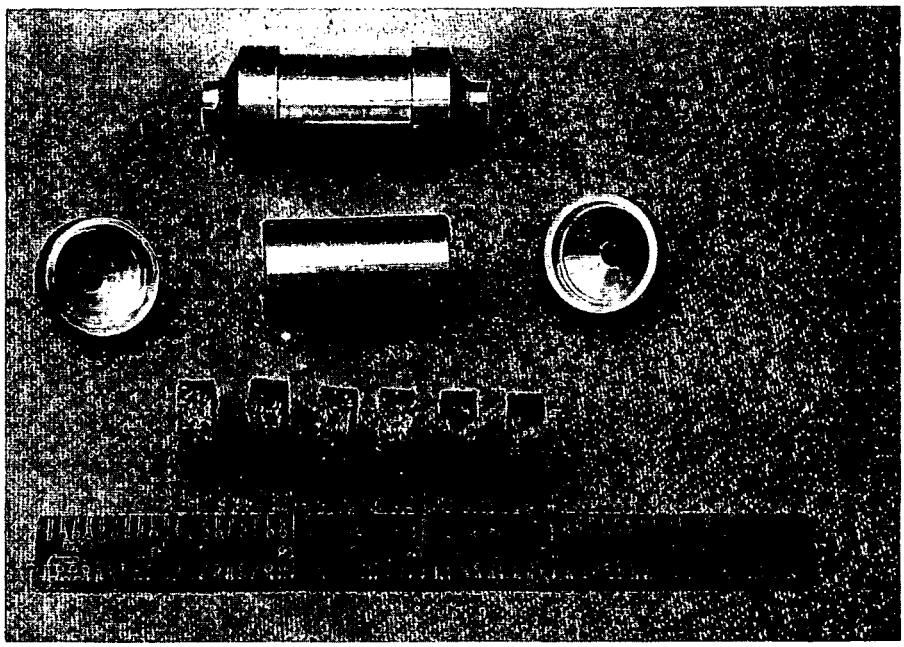

Figure 2-48. Proto 2 Engine Regenerator Assembly

SECTION 3

TEST FACILITY UPGRADING

SECTION 3
TEST FACILITY UPGRADING

3.1 SUMMARY

Test facility modifications were completed to incorporate changes dictated by configuration differences between Proto 1 and Proto 2 assemblies, to provide more flexibility in setting test point conditions, and to update data recording equipment and methods to improve accuracy and efficiency. The following paragraphs describe the modifications completed and/or planned for the Compressor and Integrated Test stands, and System Test Facilities.

3.2 COMPRESSOR TEST STAND

Several modifications are being made to the compressor test stand to increase the number of dynamic pressure measurement points, to improve data accuracy, and to make temperature read out instrumentation compatible with the integrated test stand and the systems test facility.

3.2.1 REQUIREMENTS (PROTO 2 VS. PROTO 1)

Proto 1 test experience indicates the desirability of increasing the number of dynamic pressure measurements from 4 to 5. In addition, it was determined that the thermocouples and read out system should be changed from type K to type J thermocouples for compatability with the temperature recording systems in the integrated test stand and in the systems test stand, minimizing the amount of compressor re-instrumentation required.

Several deficiencies were also experienced in the compressor test stand during Proto 1 testing:

1. Frequent recalibration of the pressure transducers was required due to excessive drift of zero and span in the signal conditioning network. This may have also had some minor impact on the accuracy of the pressure measurements.

2. Several failures occurred in the $\pm$ 2 inch range LVDT used to measure the compressor piston stroke relative to the housing. This was due to the high acceleration levels on the LVDT coils.

3. A general under-designed condition of frequency versus stroke combinations because of changes in the compressor during its initial design stage which were not known at the time of stand design.

3.2.2 TEST STAND MODIFICATIONS PLANNED

Several test stand modifications were planned and are in process of implementation:

1. New thermocouples, lead wire, connectors and read out instrumentation will be installed to convert from type K to type J thermocouples. This will be done to make the thermocouple type compatible with both the integrated test and systems test stands in order to eliminate the necessity to re-instrument the compressor when it is moved between test facilities.

2. New transducer signal conditioner modules and a module receiver/power supply have been ordered. This should eliminate the zero and span drift problem with an improvement in data accuracy and a reduction in the recalibration cycles necessary.

3. The design of the replacement stand features rotating members with a double eccentric drive portion for attachment to both the compressor and a variable balancing mass situated on the axis of rotation. In addition, a spacing adaptor will be provided to permit connection to either the Proto 1 and Proto 2 compressor.

Detail design of the new compressor test stand has been completed and released for fabrication. Completion of this test stand is scheduled prior to initiation of compressor component testing.

3.3 INTEGRATED TEST STAND

Several modifications are being made to the integrated test stand to add data not previously available, to improve data accuracy and to reduce data recording time. In addition, instrumentation circuits to perform real time data processing will be added along with provisions to partially automate data analysis, and add capability to start-up the engine/compressor system with controlled condenser and evaporator temperatures.

3.3.1 REQUIREMENTS (PROTO 2 VERSUS PROTO 1)

Proto 2 test requirements necessitate that several additional dynamic measurements be made on the engine/compressor assembly and also the performance requirements of some of the existing sensors must be changed:

1. Increase the number of pressure tranducers in the compressor from 3 to 4. Changes to transducer mounting locations requires that all transducers be replaced with new hermetically sealed units capable of operating with the high pressure helium in the bounce space applied to the connector and/or body.

2. Add a differential pressure transducer to measure displacer gas spring pressure variation referenced to the bounce space. (Data not previously available.)

3. Add a differential pressure transducer to measure second gas spring pressure variations referenced to the bounce space (data not previously available).

4. Change the pressure transducer measuring pressure fluctuations in the cold work space from a 2000 psi absolute pressure unit to a $\pm$ 500 psi differential unit referenced to the bounce space to improve measurement accuracy.

5. Change the range of the LVDT measuring power piston stroke from $\pm$ 2 to $\pm$ .75 inches to reduce overall engine height and to improve measurement accuracy.

6. Add an LVDT to measure the case to inertial ground motion in order to derive the motion of the compressor cylinder referenced to inertial ground. (Measurement not previously available.)

In addition to the new requirements, several test stand deficiencies were observed during Proto 1 testing and will be corrected:

1. Time required to log all combustor, engine, compressor, and R-22 load temperatures from manual temperature indicators was excessive. In addition, the 1.0°F resolution of the temperature measuring systems made it difficult to see small changes in performance.

2. Real time measurement of power piston/compressor housing stroke with respect to inertial space was impossible due to lack of information on case motion and associated phase angle plus limitations of data display.

3. Real time measurement of displacer/housing stroke required improved readout capability.

4. Start-up of engine at controlled evaporator and condenser temperatures was difficult due to inadequate temperature control of the water/glycol mixture in the heat exchangers.

5. Data analysis techniques for calculating engine performance were very time consuming and subject to errors. The dynamic signals were recorded on an 8 channel recording oscillograph and the signal levels and phase angles were then manually read from the chart traces and horsepower calculated from this data.

3.3.2 TEST STAND MODIFICATIONS PLANNED

Numerous test stand modifications were planned to meet these requirements and are in process of implementation as indicated below:

1. 500 psia pressure transducers have been ordered for use on compressor with soldered rather than potted connectors to withstand the projected 1200 psi He pressure in the bounce space.

2. ± 500 psi differential pressure transducers have been ordered for each engine to measure the displacer gas spring and the second gas spring relative to the bounce space pressure reference.

3. A ± 500 psi differential pressure transducer for each engine will replace the 0 - 2000 psig transducer previously used to measure the cold working space pressure.

4. ± 0.75 inch range LVDT's will be used to measure both displacer and power piston strokes.

5. A ± 0.2 inch range LVDT for each engine has been ordered to measure engine housing motion with respect to the stand (inertial ground).

6. A new LVDT signal conditioner, and 3 new pressure transducer conditioners with associated cable, connectors and pressure feed-throughs for the added instrumentation channels have been ordered.

7. A set of signal processing modules, as shown in Figure 3-1, will provide real time output of the following signals:

   a. Power piston (compressor cylinder) displacement with respect to inertial ground. (Dynamic signal L-4.) Data was not previously available in real time.

b. Displacer motion with respect to the engine housing. (Dynamic signal L-5.) Data was not previously available in real time.

c. Power piston stroke (peak to peak) with respect to inertial space. (DC signal L-6.) Data was not previously available in real time.

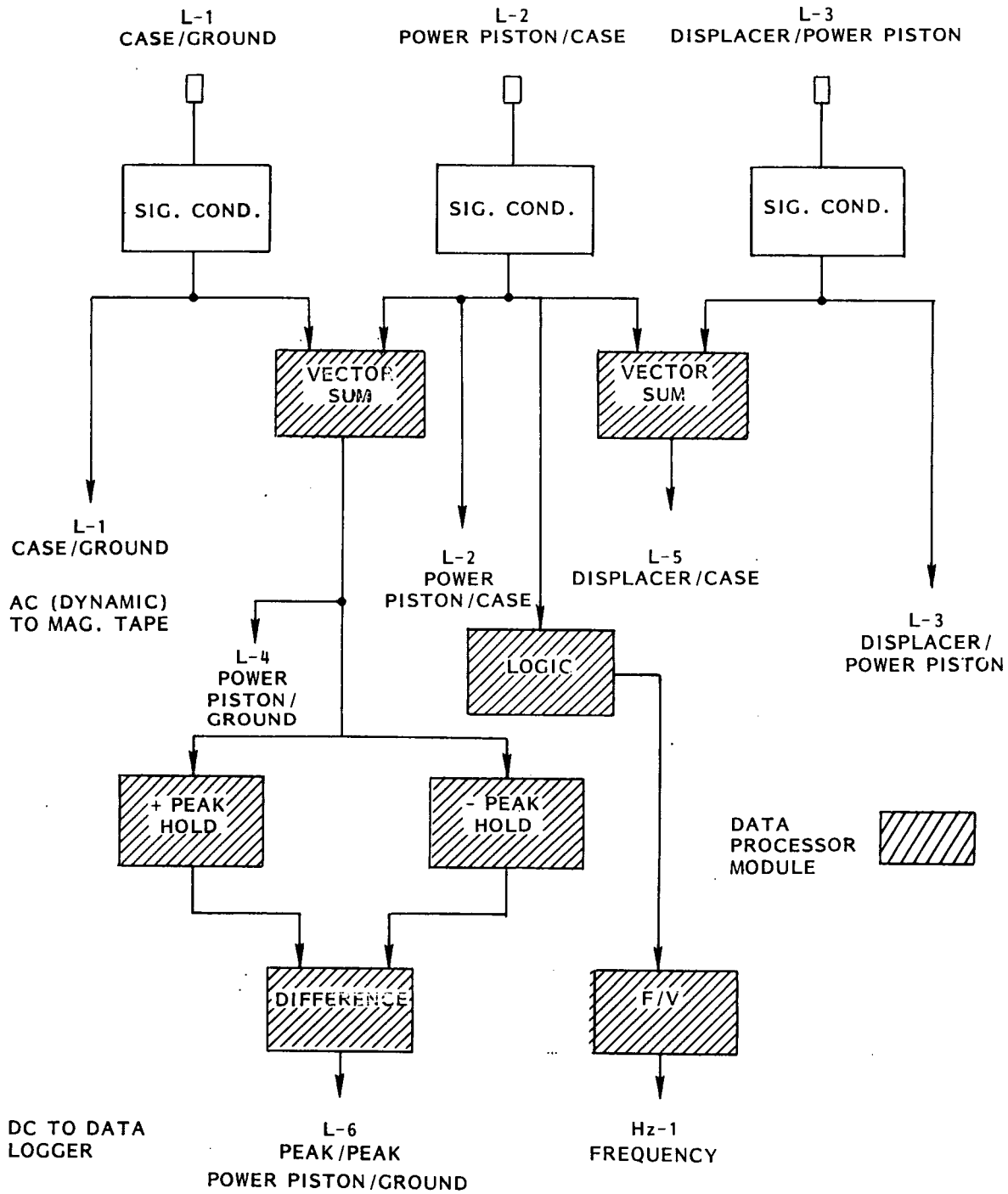

Figure 3-1. Data Processing System

8. Controllers and heaters will be installed in the water/glycol supply for the heat exchanger loops that provide condenser heat sink and evaporator heat source for the R-22 compressor. This will allow engine start-up at controlled condenser and evaporator temperatures.

9. Calibration of individual thermocouples is planned where used to measure the water/glycol mixture ΔT across the heat exchangers. This will improve the accuracy of the calculated heat loss or gain in the evaporator and condenser.

10. Digital temperature indicators and selector switches are being replaced by a 100 channel data logger. This will substantially reduce run time required to record a set of data and also improve temperature resolution from $\pm$ 1.0^{o}F to $\pm$ 0.1^{o}F with a subsequent improvement in data accuracy for the R-22 flow, operating frequency and displacer peak/peak signals that are also being recorded.

11. A Hewlett Packard model 5451B Fourier Analyzer System will be used for calculations of engine horsepower, displacer to power piston phase angles and amplitude ratios. This will reduce analysis time while simultaneously improving accuracy.

    The 8 channel recording oscillograph previously used for data recording will continue to be used but only as a real time indicator.

3.4 SYSTEMS TEST FACILITY

Several modifications are being made to the Systems Test Facility to add data not previously available, to improve data accuracy and to reduce data recording time. In addition, instrumentation circuits to perform real time data processing will be added along with provisions to partially automate data analysis.

3.4.1 REQUIREMENTS (PROTO 2 VERSUS PROTO 1)

Proto 2 test requirements necessitate that several additional temperature and dynamic measurements be made on the engine/compressor/refrigeration system assembly and also, the performance requirements of some of the existing sensors must be changed as listed below:

1. Add sensors or change range as in the Integrated Test Stand. (Listed in Paragraph 3.3.1, Items 1. through 6.)

2. Add more chrome alumel and iron constantan thermocouple leads through the chamber "feed-through."

Several deficiencies in the system test facility were noted during Proto 1 testing, requiring corrections:

1. The 1.0°F resolution of the temperature measuring system made it difficult to measure small changes in performance.

2. The limitations listed for the Integrated Test Stand deficiencies (Paragraph 3.3.2, Items 2 through 5) also apply to the engine/compressor operation in the system test as well as in the integrated test stand.

3. Combustion stability was affected by varying wind effects on the exhaust line where it exits the building.

4. A small measurement error in the air handler wet bulb and dry bulb temperatures was discovered.

3.4.2 FACILITY MODIFICATIONS PLANNED

Several test facility modifications are planned and/or in process of implementation, as indicated below. These changes are a result of increased requirements and/or to correct deficiencies described above.

1. New sensors (as listed in Paragraph 3.3.2, Items 1 through 7) have been ordered.

2. Thermocouple wire, connectors, and thermocouple terminal boards to increase type K data channels by 12 and type J data channels by 24 are planned.

3. Replacement of the existing 100 channel data logger, which has a resolution of 1°F, with a later model 120 channel data logger, with a resolution of 0.1°F, will increase both data accuracy and recorder reliability.

4. The combustor exhaust system is being re-designed to decouple combustor back pressure from wind fluctuations.

5. Relocation of air handler inlet and outlet dry bulb and wet bulb sensors to positions immediately adjacent to the sampling rakes will eliminate possible errors. In addition, the yellow-back thermometers will be replaced with calibrated platinum RTD's for readout on the new data logger system. This will eliminate the manual requirement to read and log these values with an associated reduction in time and should eliminate potential reading errors.

SECTION 4

FIELD EVALUATION TEST

SECTION 4

FIELD EVALUATION TEST

4.1 SUMMARY

The Field Evaluation Test task effort during this reporting period included development of test objectives, selection of site criteria and several test site evaluations. Overall task requirements and constraints were reviewed with DoE and GRI, and the Middle Atlantic region was determined to offer the best combination of test site climate and accessibility to General Electric's support facilities. General requirements for candidate sites, installation of the HAHP, and performance testing were outlined to several gas utilities in the Middle Atlantic region. Utility support was obtained for the screening and selection of a test site and preliminary test planning and test design were initiated. Final selection of a candidate site and the prime participating utility will be made early in the next reporting period when candidate site inspections are complete.

4.2 FIELD EVALUATION TEST DESCRIPTION

The field test of the engineering prototype gas fired heat pump addresses both product performance and marketability. An initial evaluation of product viability will be based on both heating and cooling performance and the physical characteristics of the system affecting potential customers for the HAHP. The test will also provide data which will be used in developing improvements in the Phase III pre-production prototype.

4.2.1 OVERALL OBJECTIVES

The principal objectives for the Field Evaluation Test are to:

1. Acquire Representative System Performance and Operating Data. This information will include system energy output for various time intervals and weather conditions during the nominal one-year test period. System efficiency will be determined under field conditions along with operating costs and maintenance experience. Engineering data will be collected to support design verification as well as well diagnostic analysis of any unusual or unexpected equipment problems.

2. Evaluate Product Installation Experience. The evaluation of this experience includes both anticipated and unanticipated contractor interface requirements as well as

equipment compatibility with a typical home. Consequences of both retrofit and new installations will be projected.

3. Provide Direct Participation by a Gas Utility. This objective includes utilization of existing utility expertise in selection of a test site, developing detail requirements, obtaining test site support and evaluating the gas fired heat pump as a potential product.

4. Develop Selective Product Exposure Experience. In addition to the experience gained through the participating utility, other utility companies will be given the opportunity to observe product performance and program results and, in turn, provide independent evaluations. The subjective judgments of the site owner/user will be included in the test data. Other selected public or private sector representatives will be given an opportunity to evaluate the test installation and/or test results as appropriate.

4.2.2 SCHEDULE

The overall field evaluation test schedule is shown below in Figure 4-1. The timing of the test period and its key events will be adjusted as necessary to coincide with the achievement of major milestones in the Proto 2 HAHP equipment development cycle. The test site installation will incorporate as many of the Proto 2 performance improvement designs and accessory options as feasible. A full annual heating-cooling season test cycle will be included, and extended if appropriate.

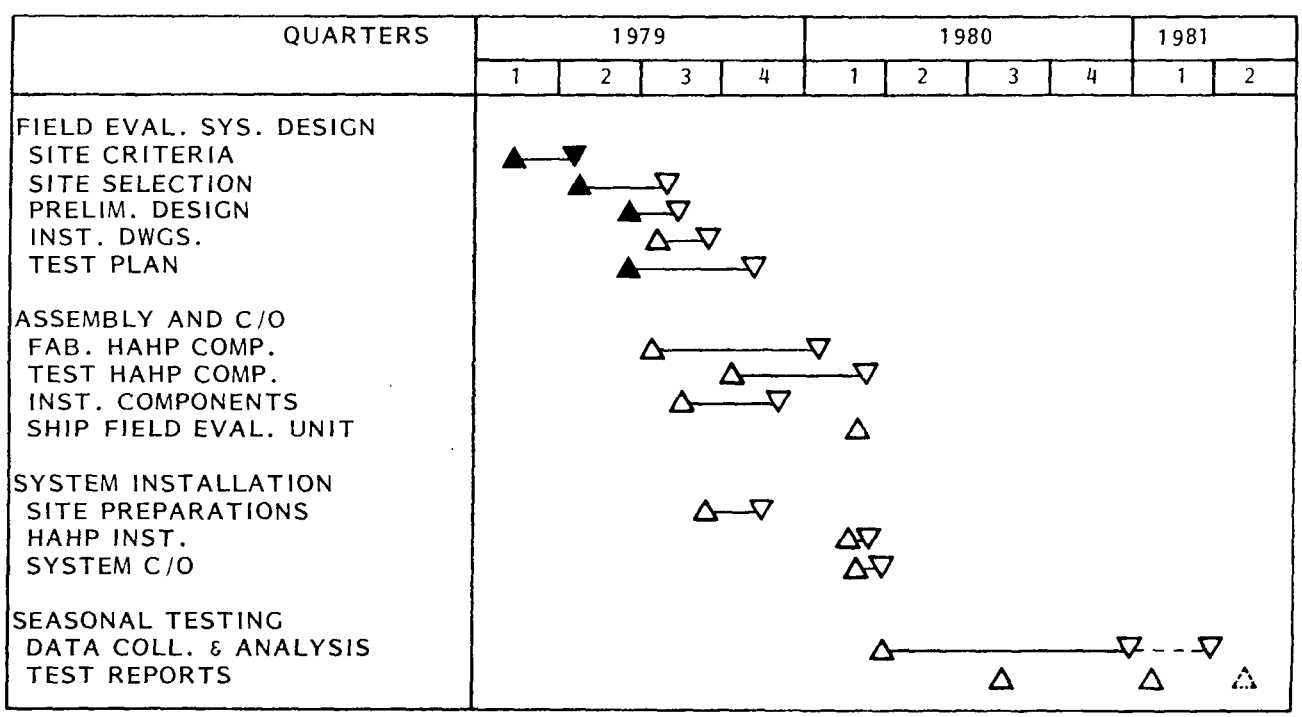

Figure 4-1. HAHP Field Evaluation Test Schedule

4.2.3 GAS UTILITY PARTICIPATION

A representative number of gas utility companies within the northeastern U.S. were invited to submit candidate test sites and support the effort to meet the test objectives. This activity commenced in May 1979 and will lead to selection of a final candidate test site and a prime participating gas utility early in the third quarter of 1979. Because of the prototype nature of this first test unit, the test site search concentrated on utilities in the gas service areas immediately adjacent to the GE engineering facility at Valley Forge. Accordingly, five utilities were contacted and briefed on the program:

1. Brooklyn Union Gas (Brooklyn, NY)
2. Philadelphia Electric (Philadelphia, PA)
3. Philadelphia Gas Works (Philadelphia, PA)
4. Public Service Electric & Gas (Newark, NJ)
5. Washington Gas Light Co. (Washington, DC)

Favorable responses were received from all of these companies. However, after reviewing program requirements, Philadelphia Gas Works withdrew as a prime participant due to a limited number of suitable test sites. Indications are that any of the remaining utilities will provide the level of technical and financial resources required to support the field test.

4.2.4 USE OF FIELD EVALUATION TEST RESULTS

It is expected that field evaluation results from the engineering prototype unit will be used to provide these specific outputs:

1. Determine acceptability of the HAHP heating/cooling capacity.
2. Determine acceptability (or probable future acceptability) of the level of maintenance and operational attention required by the HAHP.
3. Establish requirements for design changes, additional operating procedures and accessory equipment beyond those incorporated in the Proto 2 initial test.

4. Determine cost savings over conventional gas furnace/electric air conditioner combinations.

5. Estimate acceptable consumer investment payback boundaries for future equipment.

6. Evaluate utility and site owner reaction to determine specific requirements, if any, which would be essential to the elimination of product barriers such as appearance, size, ease of installation and maintenance, noise level, etc.

The overall product development plan for the HAHP includes a larger (10-20 unit) pre-production prototype (utility field test) sample quantity which will be tested in several regions of the U.S. The results from this initial single unit test, however, will guide the expanded testing activity. This input will be a major contribution to the efficiency of future testing and the early acceptance of the HAHP product. The experience in working with a single utility will be projected for the subsequent multi-utility tests covering a wide range of climatic conditions, loads and user interfaces.

4.3 SITE SELECTION CRITERIA AND APPROACH

The limitations imposed by a single unit field test of the HAHP dictated careful specification of acceptable test site conditions. These are defined and explained in the following paragraphs.

4.3.1 GENERAL REQUIREMENTS

The following items were considered in determining acceptable test site locations:

1. Representative Regional Weather and Climatic Conditions. A previous survey of some 14 regional locations was reviewed and projections of seasonal performance for several of these locations were recalculated using the latest HAHP performance estimates. The annual savings results correlated satisfactorily with the original survey and are shown in Table 4-1 for the three representative cities. The Philadelphia/Middle Atlantic area was determined to be sufficiently representative for initial test purposes. With data from Philadelphia area tests, it will be possible to predict results for other regions.

2. Gas Supply Availability. Previous work has established that gas availability is not a significant problem in any of the major metropolitan areas targeted for product introduction and use. However, the specific test site selected will be required to have gas service and customer loading typical of the majority of gas utility customers.

3. Opportunity for Gas Utility Participation. Direct utility participation in the testing program was deemed a key element to expediting product development. This will be accomplished by selecting a site home owner who is either a utility employee or otherwise qualified, in the eyes of the utility. In addition, the test site must be located in the service area of a utility willing to provide direct test support.

4. Suitable Building, Occupancy and Load Parameters. The selected test site must meet a number of specific criteria which establish the suitability of its heating and cooling loads, the representative nature of the building construction details, the number of occupants, and the normal pattern of building use. These are described in more detail below.

5. Site Accessibility and Attractiveness. A satisfactory test site must be easily accessible to both GE and utility personnel for installation and test monitoring activities. Since some special visitors may also be involved, an attractive overall site appearance is highly desirable.

Table 4-1. 1985 Operating Cost Savings - Advanced HAHP vs. Advanced HVAC*

	1985 Savings		
	Summer	Winter	Annual
Philadelphia	48	194	242
Atlanta	54	127	181
Boston	18	300	318

* Improved conventional gas furnace/electric air conditioner and nominal 3 ton building cooling load. Savings in $1979

4.3.2 SELECTION CRITERIA

To facilitate site selection, a more detailed list of screening criteria was used. These criteria are presented below:

1. Representative Weather and Climatic Conditions

   - Average annual conditions typical of region selected
   - Appropriate degree day range (heating and cooling)

- Appropriate ambient temperature range ($10^{o}F$ - $95^{o}F$)
- National weather service local weather data available

2. Gas Supply
   - Generally available to a significant number of local consumers
   - Available on site
3. Opportunity for gas utility participation
   - Utility serves demo site area
   - Level of participation desired by utility
4. General building, occupancy and load requirement
   - Single family residence (1800 - 2000 ft^2)
   - Insulation typical of current area construction practice
   - Representative occupancy pattern
   - Balanced heating and cooling loads for 3 ton heat pump
   - Existing/planned central gas furnace and electric air conditioning for back-up and comparison
   - Owner agreement assured
   - Minimal building permit and code compliance problems:
     - Prototype equipment
     - Glycol use
   - Local contractor availability
   - Minimal union labor problems
5. Requirements for existing sites
   - Historical fuel use and cost data available
   - Acceptable existing heating/cooling equipment

- Minimal requirement for building modification
  - Suitable HAHP air handler installation space available
  - Convenient duct interface access

6. Requirements for new construction sites
   - Fuel use data (or calculations) available for comparable existing structures
   - Building plans/drawings available
   - Minimal interior/exterior modification to accommodate HAHP
   - Acceptable planned heating/cooling equipment
7. Site accessibility
   - Minimizes contractor personnel travel
   - Convenient to gas utility personnel
   - Accessible to government/industry visitors

4.3.3 SCREENING PROCEDURE

Each of the participating utilities considered the program, its test objectives and the selection criteria and then pre-screened possible sites. Based on utility recommendations, GE personnel then visited each site and obtained additional details with which to compare the candidate sites. A standard check list was used along with photos of existing HVAC system installations to facilitate subsequent internal review meetings and a ranking of candidates.

4.4 SITE EVALUATIONS

During this reporting period, three sites were inspected, and an additional six or seven candidates identified. The results of site visits to date are given below.

4.4.1 COMPARISON OF SITES EVALUATED

Table 4-2 identifies the candidate sites and Tables 4-3 and 4-4, respectively, show the overall assessment of the sites visited, compared with the major selection requirements and criteria, and the estimated heating/cooling loads.

Table 4-2. Candidate Sites (1)

	Site									
	A	B	C(3)	D	E	F	G	H	I	J
Location	Burlington, NJ	Landsale, PA	Dresher, PA	Ewing, NJ	Staten I., NY	Staten I., NY	Staten I., NY	Fairfax, VA	Staten I., NY	Staten I., NY
Type Residence(2)	1F/1S	1F/2S	1F/2S	1F/2S	2F/2S	2F/2S	2F/2S	1F/1S	1F/2S	1F/2S
Utility	PSE&G	PECO	PECO	PSE&G	BU	BU	BU	WGL	BU	BU
Owner	Utility Customer	Utility Employee	Utility Employee	Utility Employee	Utility Employee	Utility Customer	Utility Customer	Utility Employee	Utility Customer	Utility Customer
Present HVAC	Gas/Elec. F AC	Gas/Gas F AC	Gas/Elec. F AC	Gas/Elec. F AC	Gas/Elec. F AC	Gas/Elec. F AC	Gas/Elec. F AC	Gas/Elec. F AC	Gas/Elec. F AC	Gas/Elec. F AC

Notes: (1) Sites A, B, C, Visited, Remaining Sites Scheduled in July 1979

(2) 1F - One Family 1S - One Story
2F - Two Family 2S - Two Story

(3) New Construction

Table 4-3. Site Comparison Summary

Criteria*	Site		
	A	B	C
Representative Location			
Gas Availability			
Utility Participation			
Site Accessibility			
Building & Load Parameters			
Heating Load	L		
Cooling Load	L		
Building Size			
Insulation Level			
Occupancy Pattern	X		
Bldg. Layout/Basement Access		(1)	(1)
Outdoor Pad Area			
Existing HVAC Layout		X	
Local Code Requirements(2)			
Availability Schedule			
Other Considerations	(3)		

Key: L - Low (outside HAHP desired load range)

X - Unfavorable

* - Acceptability is indicated by absence of any symbol on matrix

Notes: (1) - Access thru interior of house

(2) - No problems identified to date - utility will need to check in more detail

(3) - Owner not a utility Employee

Table 4-4. Estimated Heating and Cooling Loads

	Desired Range(1)	Site		
		A	B	C
Heating				
Annual Load - 10^6 BTU	72 - 107	50 - 53	121	111
Design Point Load - KBTUH (15°F)	38.5 - 57.5	24 - 27	56	50
Cooling				
Annual Load - 10^6BTU	27.5 - 41	7	30 - 40	27
Design Point Load - KBTUH (90°F)	29 - 43	8 - 24	30	26

(1) Philadelphia/Middle Atlantic Region

4.4.2 CONCLUSIONS AND RECOMMENDATIONS

Although all three of the candidate sites were satisfactorily pre-screened, it was apparent that important differences existed. Site A was a very attractive location, but the load presented was lower than desired. This was aggravated by the owner's use pattern of air conditioning that would be unlikely to ever tax the HAHP to the desired level. Site B had the necessary load, but if selected would require substantial rework of present ducting to provide a suitable HAHP interface. Site C came closest to meeting all requirements with no more than minor deficiencies. Basement access at Site C was through the interior of the house (as was Site B), but since this is characteristic of most houses in the area, an outside basement entrance constitutes a special access benefit and not necessarily a requirement. At this point, it was concluded that Site C was a leading candidate. Selection was deferred, however, pending review of the additional candidates offered.

4.5 FIELD EVALUATION TEST PLAN

The Field Evaluation Test Plan covers all field activities: Installation, checkout, initial shake-down tests, and long term seasonal performance tests. Each activity will add to knowledge for activities in subsequent tests and eventually in production product sales and service.

Therefore, the test plan is being developed to address future program tests as well as the immediate test objectives of the engineering prototype HAHP.

4.5.1 SYSTEM INSTALLATION

Several installation approaches were considered to meet the overall program schedule. It was decided that the best approach would be to complete site preparations well in advance of delivery of the HAHP outdoor unit. Installation of the indoor air handler will be made early, or provisions will be made for duct access, power, etc. for ease of installation of the unit when it becomes available. Table 4-5 lists the principal inside and outdoor installation provisions which will be made for the HAHP test unit.

Suitable provisions will be made prior to the outdoor HAHP unit delivery for tool and supply storage, access during working hours and a telephone in the basement work area. Implementation of the installation activities will be primarily a utility company respnsibility, assisted by GE - supplied information and personnel as required.

4.5.2 SYSTEM CHECKOUT

Following physical placement and connection of all HAHP equipment. GE personnel will test the system for proper operation. Utility personnel will handle interconnection with the gas and electric supply and will be present to acquire familiarity with HAHP operation. Checkout will also include verification of operation of all instrumentation and recording equipment. Values of certain parameters (such as air handler CFM output) will be checked on a one-time basis since normal performance evaluations will not involve monitoring unless anomalies are encountered.

4.5.3 INITIAL TESTING

Following checkout, several short test runs will be utilized to provide typical operating data. These will be analyzed to verify that the HAHP system is performing as expected and that data-taking procedures are adequate. This activity will occupy only a one - two week period, but will assure consistency of long term performance data.

Table 4-5. Principal Installation Requirements

Indoor	Outdoor
HAHP Air Handler Location Selection	Pad Location Selection
Modification of Supply & Return Furnace Ducts	Concrete Pad Emplacement
Duct Transitions	Gas Line Piping
Dual System Air Control Dampers	Conduit Penetrations (to basement) - Electric Power - Refrigerant Lines - Coolant Lines - Instrumentation & Control Cabling
Instrumentation & Control Panel Location	Weatherproof Electric Power Disconnect Switch
Cap Duct Openings for HAHP Air Handler	Pad Enclosure/Screen (if needed)
Condensate Line (if needed)	
Thermostat & Control Cabling	
HAHP Air Handler Electric Power Circuit	
Instrumentation Power Circuit	
Gas & Electric Sub-metering Provisions	

4.5.4 SEASONAL PERFORMANCE TESTING

In addition to obtaining direct data on HAHP performance, seasonal performance testing will encompass special test periods. Maximum performance of the HAHP in both heating and cooling modes will be determined by intentionally modifying the load conditions or use pattern. Another special test will determine the minimum level of maintenance and monitoring attention that will still permit fully satisfactory operation.

Utility personnel will make periodic site visits, provide visual and mechanical inspections, and transfer data tapes to GE for analysis. GE personnel will be available as needed in this period of time to investigate problems and to work with the utility and the owner to correctly interpret data and operating results. During the seasonal performance testing period, site visits and briefings will be made available to GRI and DoE personnel. Duration of the total

performance test period will be determined by the results obtained; however, it is expected that as a minimum, a full heating and a full cooling season will be evaluated.

4.6 FIELD EVALUATION TEST DESIGN

This section presents a discussion of the key features of the system configuration being planned for the field evaluation test.

4.6.1 INDOOR UNIT/CONVENTIONAL HVAC INTERFACE

It has been determined that the developmental status of the Proto 2 HAHP hardware and its special test needs warrants parallel operating capability of the HAHP and the site conventional gas furnace/electric air conditioning system. One of the prime design considerations of this approach is the common use of existing heating ducts with a switch-over capability between systems. Figures 4-2 and 4-3 show a preliminary duct interface concept based on a common arrangement of a conventional furnace/air conditioning system.

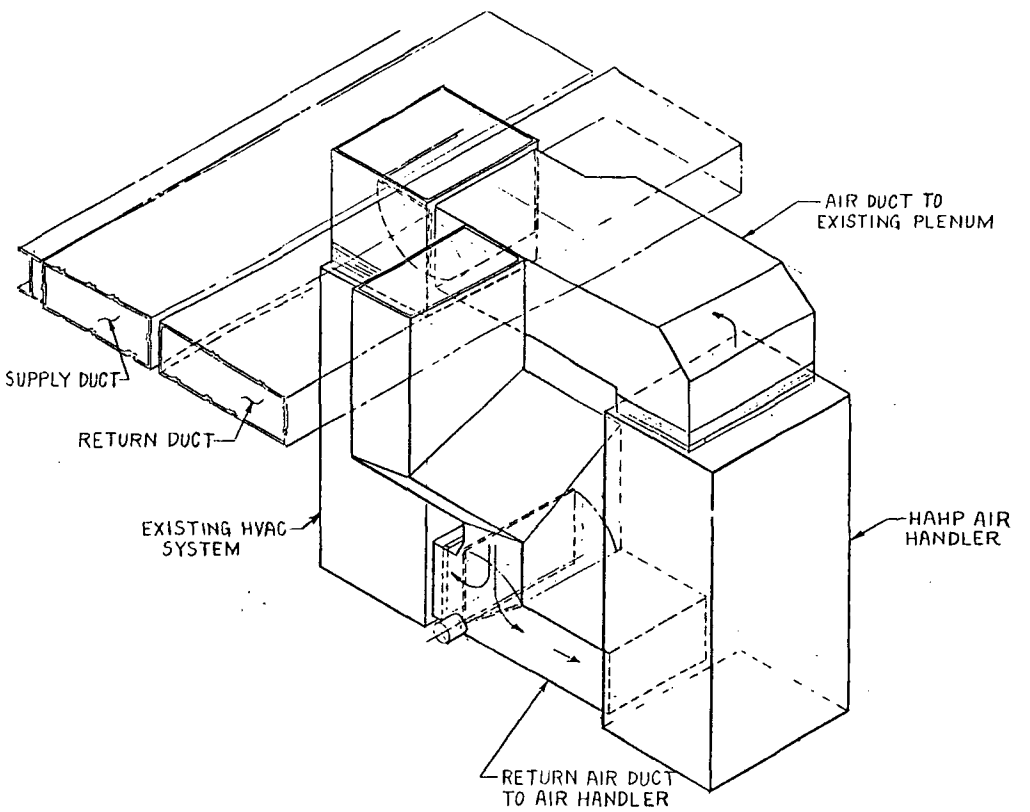

Figure 4-2. Duct Interface Concept

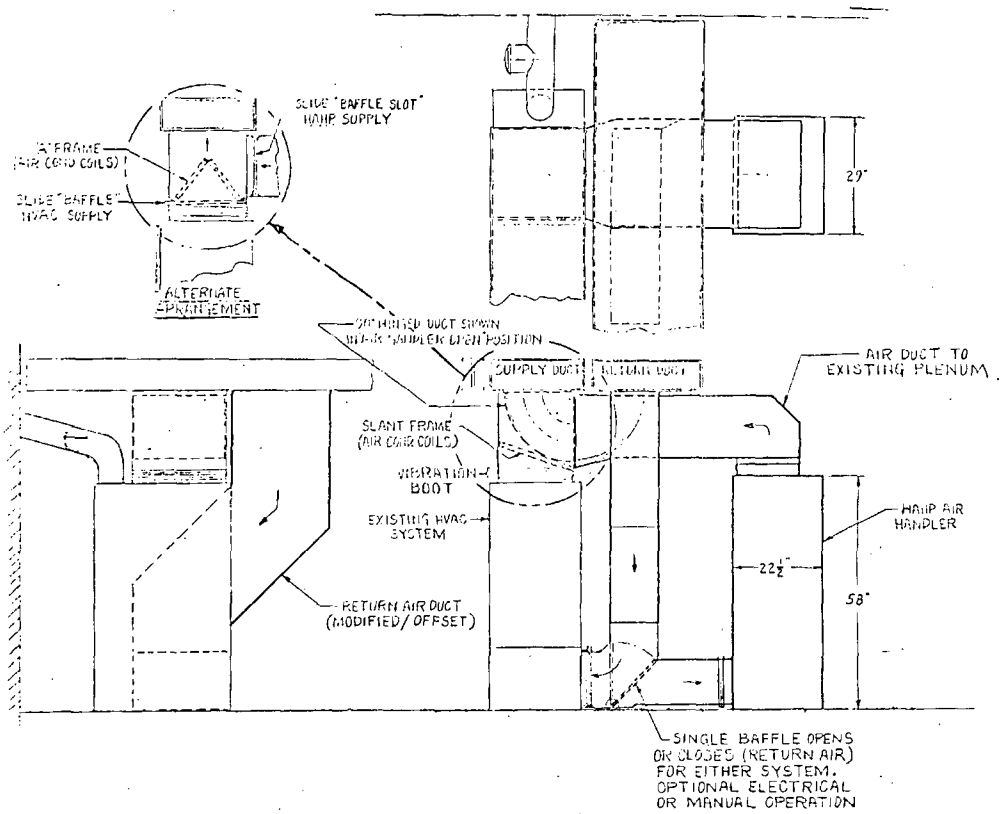

Figure 4-3. Duct Interface Concept

The HAHP indoor unit will also have independent and/or segregated control and power supply arrangements permitting effective submetering of its energy consumption.

4.6.2 OUTDOOR UNIT INTERCONNECTION

The HAHP outdoor unit will have separate power and gas line connections permitting submetering of energy consumed as well as separate controls which will not depend on the conventional HVAC system operation. Indoor-outdoor HAHP connections will be made via separate wall penetrations and conduit runs to eliminate electric field interactions between AC power, and control wiring and instrumentation cables. Factory provided, built-in sensors will be used for most measurements. Cabling will be brought to suitable jack panels and extended with field wiring routed in and through the residence basement. Most of the metering and measurement functions will be remoted to a basement instrumentation area, eliminating a need for outside work other than for inspection and any required maintenance.

4.6.3 CONTROL SYSTEM

Control system details are not yet defined. However, it is planned to provide total or near-total redundancy with the conventional HVAC system starting with the indoor thermostat controls. It is also planned that in addition to basement-located controls for system switchover, a warning light will be provided at the thermostat indicating any inability of the HAHP unit to start or run. This will alert the owner to switch to the conventional HVAC system. Automatic switchover was considered, but is not planned due to the complications that often inhibit trouble shooting and data interpretation, and the often low reliability of automatic switchover devices (motorized dampers, thermostat switchover circuits, interlocks, etc.).

4.6.4 DATA ACQUISITION SYSTEM

The data system will consist of:

1. Magnetic and paper tape recorded performance and engineering data.
2. Visually monitored and manually recorded metering and observations.

Approximately 22 channels of data will be utilized with provision for expansion to 30 channels. Up to two weeks of recorded data is planned before magnetic tapes must be removed and new ones started. This approach will allow periodic data analyses by GE and provide an ability to follow data trends on a timely basis.

4.7 PLANNED ACTIVITY FOR NEXT PERIOD

The following events are planned in the next reporting period:

1. Completion of site candidate evaluations.
2. Site selection.
3. Completion of utility/owner agreements.
4. Site preparations per test design plans.
5. Ordering of installation materials.
6. Start of site modifications and installation.

GENERAL ELECTRIC

Space Division

Headquarters: Valley Forge, Pennsylvania ☐ Daytona Beach, Fla. ☐ Evendale, Ohio

☐ Huntsville, Ala. ☐ Bay St. Louis, Miss. ☐ Houston, Texas ☐ Sunnyvale, Calif.

☐ Beltsville, Md. ☐ Tacoma, Wash. ☐ Palmdale, Calif. ☐ Bedford, Mass.

☐ Washington, D.C. Area