FILE COPY
DO NOT REMOVE

GE DOCUMENT NO. 79SDS4207

DEVELOPMENT AND DEMONSTRATION OF A STIRLING/RANKINE GAS ACTIVATED HEAT PUMP

CONTRACT NO. EC-77-C-02-2911

SEMI-ANNUAL REPORT

NO. COO/2911-3

JANUARY THROUGH JUNE 1978

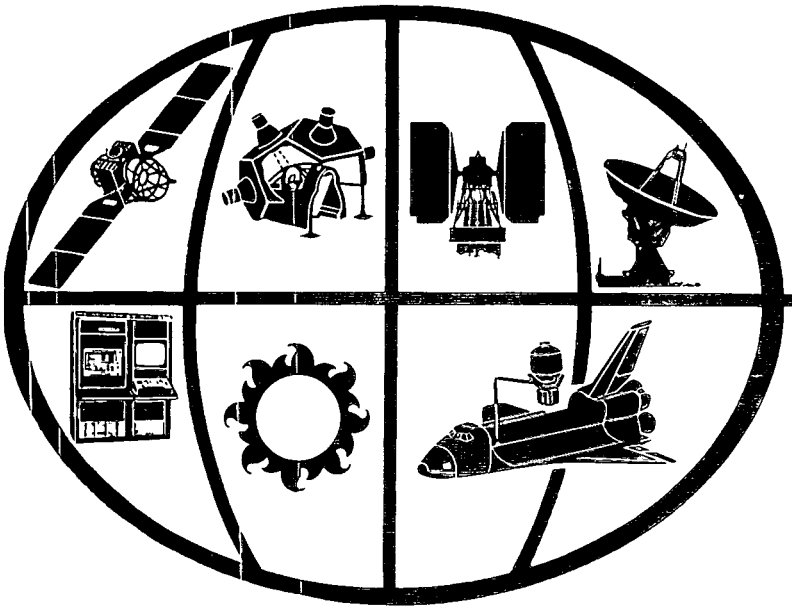

space division

GENERAL ELECTRIC

GE DOCUMENT NO. 79SDS4207

DEVELOPMENT AND DEMONSTRATION OF A STIRLING/RANKINE GAS ACTIVATED HEAT PUMP

CONTRACT NO. EC-77-C-02-2911

SEMI-ANNUAL REPORT

NO. COO/2911-2

JANUARY THROUGH JUNE 1978

GENERAL ELECTRIC

SPACE DIVISION

Valley Forge Space Center

P. O. Box 8555 • Philadelphia, Penna. 19101

TABLE OF CONTENTS

Section		Page
1	INTRODUCTION	1-1
	1.1 Background	1-1
	1.1.1 Phase I Results	1-1
	1.1.2 Phase II Objectives	1-1
	1.1.3 Phase II Prior Accomplishments	1-4
	1.2 Progress Summary	1-7
2	PRODUCT DESIGN	2-1
	2.1 Introduction	2-1
	2.2 Stirling Engine/Helium Pump Integrated Test	2-1
	2.3 Stirling Engine/Linear Compressor Integrated Test	2-3
3	PRODUCT DEVELOPMENT	3-1
	3.1 Introduction	3-1
	3.2 Combustor	3-2
	3.2.1 Summary	3-2
	3.2.2 Performance	3-3
	3.3 Stirling Engine	3-6
	3.3.1 Summary	3-6
	3.3.2 Bearing Sleeve Seals/Piston Ring Development	3-8
	3.3.3 Tuning Techniques	3-11
	3.4 Compressor	3-12
	3.4.1 Summary	3-12
	3.4.2 Performance	3-14
	3.4.3 Gas Spring Pressure Regulating System	3-15
	3.4.4 Mechanical Performance	3-17
	3.4.5 Tubular Coils	3-18
	3.5 Stirling Engine/Compressor Integrated Test	3-20
	3.5.1 Summary	3-20
	3.5.2 Performance	3-21
	3.5.3 Engine Tuning Procedures	3-25
4	ADVANCED COMPONENT DEVELOPMENT	4-1
	4.1 Introduction	4-1
	4.2 Advanced Engine Components	4-1
	4.2.1 Improved Displacer Gas-Spring Design	4-1
	4.2.2 Engine Self-Starting Mechanism Design	4-2
	4.3 Magnetic Drive Concept	4-5
	4.4 Materials Development Testing	4-9
	4.5 Advanced Combustor Development	4-11

TABLE OF CONTENTS (Continued)

Section		Page
	4.5.1 Advanced Combustor	4-11
	4.5.2 Heater Head Fin Analysis	4-14
	4.5.3 Ceramic Burner Development	4-16

Appendix

A	TEST PLAN SUMMARY FOR FREE PISTON STIRLING ENGINE (FPSE)/ INERTIA COMPRESSOR	A-1
B	TEST PLAN FOR WEAR LIFE TESTING OF BEARING/SEAL MATERIALS	B-1

LIST OF ILLUSTRATIONS

Figure		Page
1-1	Phase I Flow Diagram	1-2
1-2	Phase II Flow Diagram	1-3
2-1	Engine Test Energy Balance	2-2
2-2	Effect of Piston Rings On Engine Output	2-3
2-3	Piston-Displacer Phase Diagram	2-4
2-4	Typical Integrated Test Run Energy Balance	2-6
2-5	Proto I Engine/Compressor Performance Maps	2-7
2-6	Effect of Superheat on Compressor Work	2-9
3-1	Typical Temperature Measurements (°F) 40K Firing Rate - Engine Testing	3-4
3-2	Combustor Performance Test Results	3-5
3-3	Combustor/Engine Interface Configuration	3-5
3-4	FPSE/Helium Pump Assembly	3-7
3-5	Stirling Engine Piston/Load Assembly	3-8
3-6	Proto I Free Piston Stirling Engine Power Piston Assembly	3-9
3-7	Proto I Piston/Liner Centering Mechanism Hardware	3-10
3-8	Proto 1 Engine Test Displacer Configurations	3-11
3-9	Proto I Compressor	3-13
3-10	Proto 1 Compressor Performance	3-15
3-11	Proto I Pressure Regulation Schedule	3-16
3-12	Proto 1 Coiled Spring Tube Design Stress Data	3-18
3-13(a)	Tubular Coils Installed on Compressor and Engine	3-19
3-13(b)	Tubular Coil Endurance Test Stand	3-19
3-14	Assembly Drawing of FPSE and Compressor	3-22
3-15	Combustor/Engine/Compressor Assembly Mounted in Test Facility	3-23
4-1	Alternate Displacer Gas Spring Configurations	4-3
4-2	Typical Motions of Engine Piston and Displacer and Working Space Pressure During Start-Up	4-4
4-3	FPSE Electromagnetic Starter	4-6
4-4	Alternate Engine/Compressor Drive Concepts	4-7
4-5	Engine Bearing and Seal Materials - Friction and Wear Test Machine	4-10
4-6	Advanced Combustor Design	4-12
4-7	Advanced Combustor - Inlet Housing	4-14
4-8	Proto I Heater Head Fin Design	4-15
4-9	Advanced Heater Head Fin Design	4-17
4-10	Various Types of Burner Frits	4-18

LIST OF TABLES

Table		Page
1-1	Subsystem Status	1-7
2-1	Engine/Compressor Integrated Test Conditions	2-5
2-2	Engine Operating Characteristics	2-7
4-1	Preliminary Evaluation of Alternate Engine/Compressor Drive Concepts	4-8
4-2	Flow Velocity Distribution at 16 CFM	4-13

SECTION 1

INTRODUCTION

SECTION 1

INTRODUCTION

1.1 BACKGROUND

In January 1975, General Electric embarked with the American Gas Association (AGA) on a multi-phase program for the development of a Gas Heat Pump (GHP). The Department of Energy (DOE) joined General Electric and the AGA in the program in 1976.

Phase I of the program was completed in December 1975, and Phase II was initiated in February 1976.

1.1.1 PHASE I RESULTS

The Phase I program followed the task structure shown in Figure 1-1. The primary objective of this program was to evaluate, through an analytical effort, if a gas heat pump product could evolve into a viable business venture. A comparison of the possible heat activated heat pump concepts showed that the Stirling/Rankine and the absorption cycle were the most promising from the standpoint of performance (potential operating savings), region of application, and market application (residential and/or commercial); the product design was performed in sufficient detail to show that the variation in manufacturing costs of the candidate systems would not significantly affect payback considerations. Further refinement of the design, cost, and performance for the two candidate systems and a definition of product introduction scenario and pricing strategies allowed a business evaluation of the two concepts to be completed. The results of these efforts were reviewed within GE and with AGA and gas industry representatives. As a result of Phase I effort, the Stirling/Rankine concept was selected as the most promising approach and a decision was made to proceed with the Prototype Development, Phase II.

1.1.2 PHASE II OBJECTIVES

The objective of the Phase II program is to demonstrate that the performance estimates generated during Phase I can be realized and that cost goals are realistic. The Phase II task flow diagram is shown in Figure 1-2.

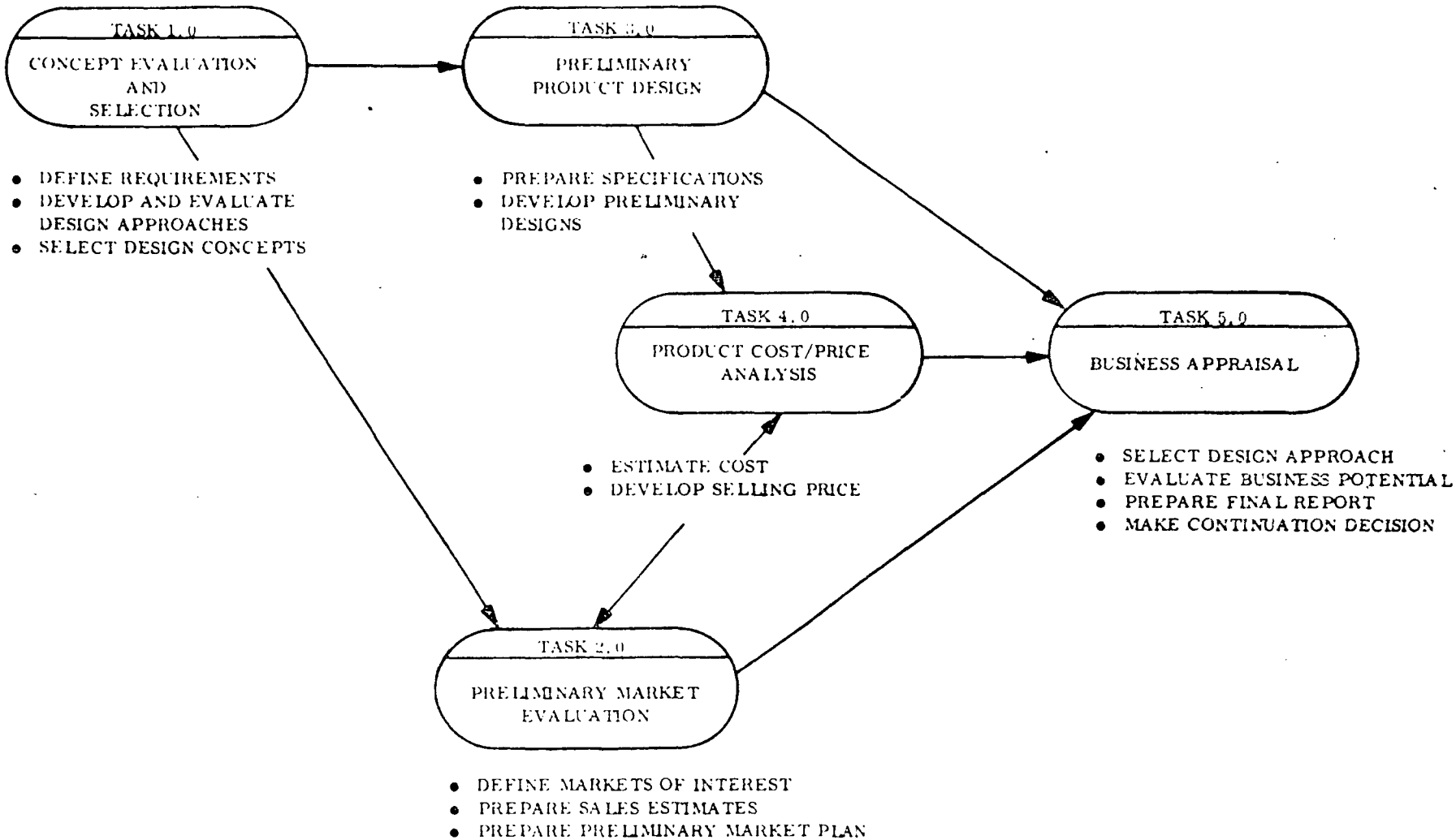

Figure 1-1. Phase I Flow Diagram

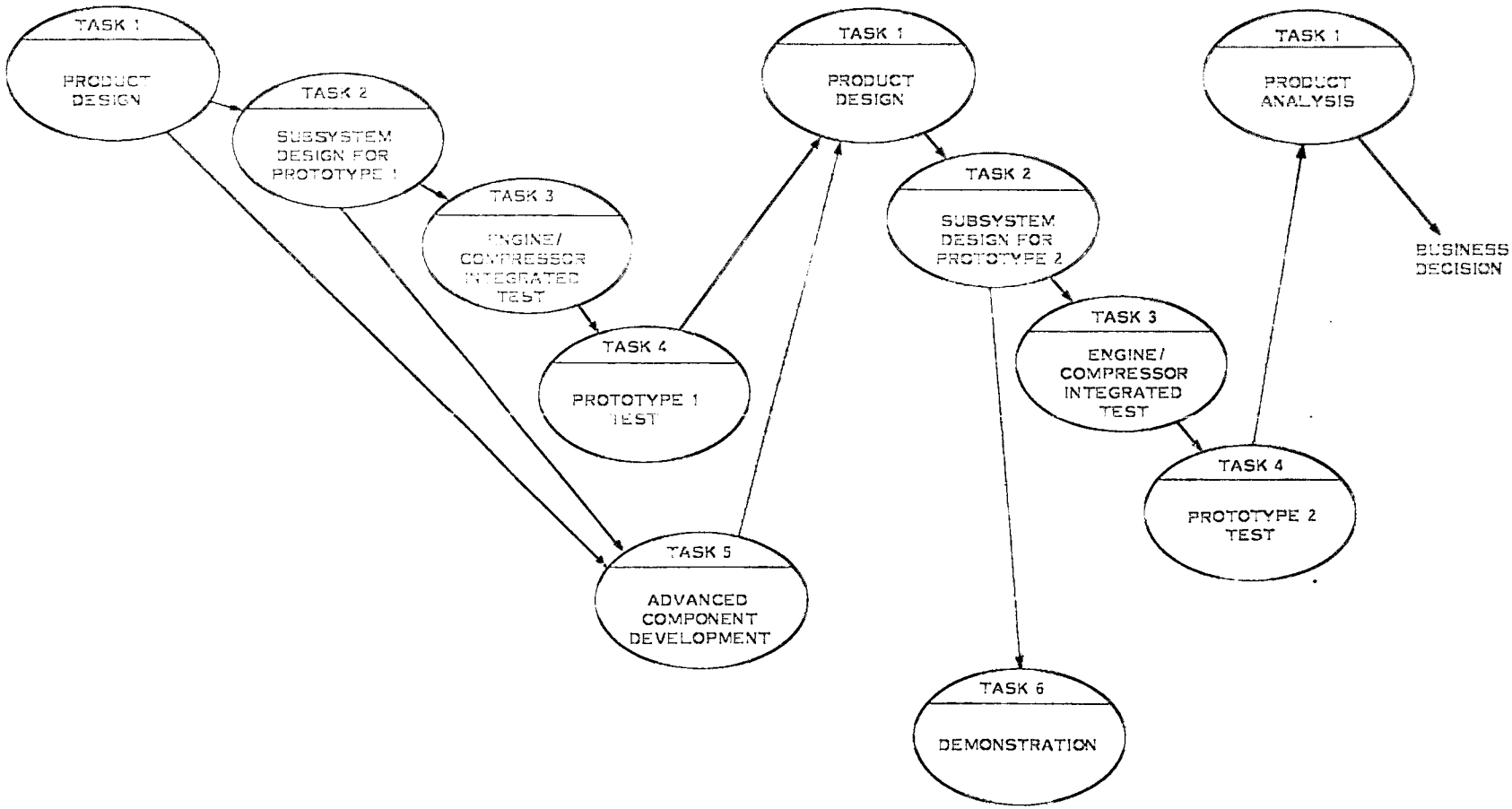

Figure 1-2. Phase II Flow Diagram

Two generations of prototype hardware will be developed during the Phase II program. Prototype 1 will be the first attempt to test a complete Stirling/Rankine GHP system with heat pump configured hardware. This system will be comprised of hardware which is primarily developmental in nature. The Prototype 2 system will consist of more mature hardware. It will incorporate the results of the Prototype 1 development effort and will be designed toward the eventual product.

1.1.3 PHASE II PRIOR ACCOMPLISHMENTS

The gas heat pump can be described in terms of five major subsystems: the natural gas combustor, the Stirling engine, the refrigerant compressor, the controls, and the air-handlers.

The Prototype 1 GHP will be a 3-ton, split system providing approximately 64,000 BTU/hr in the heating mode at a nominal 45°F ambient temperature. The overall product performance goal is to achieve Coefficients Of Performance (COP) of 1.6 and 0.85 for the heating and cooling modes, respectively (excluding the electrical power requirements). The electrical power required for fans, blowers and pumps is targeted at less than 1500 watts. Based on these performance levels, the following performance goals can be assigned to the major subsystems:

- Stirling Engine Cycle Efficiency: 32%
- Refrigeration Loop COP: 3.5
- Overall Combustion Efficiency: 80%

The following sections summarize the accomplishments during the previous Phase II reporting period for the system design and each of the subsystem areas.

Product Design. During the previous reporting period, alternative capacity control techniques were evaluated and a two-step firing rate approach selected for the combustor firing control. This approach provides higher overall SPF's than either a constant or fully modulated firing control while satisfying the building load.

A preliminary HAHP Failure Modes and Effects Assessment was completed during the last reporting period. The analysis provided a hazard/failure mode identification list and suggested design provisions to overcome or modify potential deficiencies.

Combustor. Combustor units for the Prototype 1 engine were tested as components and integrated with the Stirling engine in the previous reporting period. Modifications to the combustor design were made to reduce carbon monoxide (CO) emissions and to reduce the pressure drop in the combustor. Test results indicated that the combustor met or exceeded design performance requirements with these modifications.

Independent tests on various thickness feltmetal burners, ceramic burners and combustor air supply blowers were also completed in the previous period. Improvements in heater head performance were demonstrated in the feltmetal burner tests. The ceramic burner tests were encouraging, but problems were encountered in sintering the burner material.

Engine. In the previous reporting period, fabrication, assembly, and checkout testing of the Free Piston Stirling Engine (FPSE) were completed, and engine performance testing was initiated. In addition, a pneumatic pulsing technique was developed for starting the engine.

Three engine units plus selected spare parts were fabricated. The first unit was installed in the engine test facility with a pneumatic loading device for initial testing. Multiple start/stop cycles were logged at the end of the last reporting period, with varying energy input levels and engine change pressure levels.

Because the facility loading device increases the dynamic stability of the FPSE, a larger displacer rod area than is optimum for the FPSE/compressor is required to start the FPSE/facility load assembly. In addition, use of the facility load device limits the theoretical power capability of the FPSE in this test configuration. These effects were incorporated into the predicted dynamic performance of the assembly and verified by testing in the previous period, confirming the predictive abilities of the analytical model.

Initial testing during the last reporting period also revealed that the displacer/piston gas spring was too stiff, limiting displacer motion and hence power output. In addition, performance degredation caused by excessive carbon bearing and seal sleeve wear were observed.

Redesign of the displacer/piston gas spring to achieve the correct spring characteristics was accomplished and fabrication of the modified components was underway at the end of the previous period. This hardware was incorporated into the test unit in the current period. Various approaches to achieve a positive seal, such as piston rings, were also under evaluation at the end of the previous period. Reworked hardware capable of accepting lower wear sealing hardware was planned for incorporation into the engine in early 1978.

Compressor. The development of the inertia compressor progressed in the last reporting period with the fabrication and testing of the Prototype 1 unit. Fabrication and assembly of the unit was completed and performance testing started. The Prototype 1 compressor incorporates several changes from the Engineering Research Compressor (ERC) previously tested. In addition, the pressure regulator identified as necessary to assure stable compressor operation was fabricated and integrated with the compressor assembly for testing.

Initial testing of the unregulated Prototype 1 compressor yielded good efficiency levels and reliable startup characteristics. Further testing with a second unit, including the pressure regulator, yielded test results agreeing favorably with predicted performance. Testing at design operating conditions was conducted early in the current reporting period.

Development and testing of the refrigerant supply and delivery tubular coil springs also progressed during the previous period. The coil design and material selections were reviewed by outside consultants and sample tubes fabricated and endurance tested. Testing, still underway at the end of December showed satisfactory endurance beyond 30×10^6 cycles, well beyond the knee of the tube material S-N curve.

Air Handlers. The indoor and outdoor air handlers, including controls, were installed in the HAHP psychrometric test facility and tested during the previous reporting period. Parametric testing was completed in the previous period, and all test goals were achieved. Testing of

the air handlers and the psychrometric test facility included optimization at the cooling design point. The outdoor coil was balanced in the heating mode as an evaporator. The air handlers were characterized in the parametric testing, and desired modifications for the Prototype 2 units identified.

1.2 PROGRESS SUMMARY

Program effort during the fifth 6-month period of Phase II concentrated on completion of Prototype 1 component testing, integrated engine/compressor testing, and initiation of system testing. Table 1-1 summarizes the status for each subsystem during the January - June reporting period. Detailed descriptions of program progress on each subsystem and the system design are presented in following sections of this report.

TABLE 1-1. SUBSYSTEM STATUS

Subsystem	Status
Combustor	• Component test completed • Integrated testing with FPSE completed
Engine	• Engine/Helium Pump testing completed • Engine/Linear Compressor Integrated testing completed
Compressor	• Compressor component testing completed • Refrigerant tube coil endurance tests completed
Air Handlers and Controls	• System assembly complete • System testing initiated

SECTION 2

PRODUCT DESIGN

SECTION 2

PRODUCT DESIGN

2.1 INTRODUCTION

During this reporting period, product design efforts concentrated on reduction, interpretation and analyses of data obtained from the integrated testing of the Prototype I engine/helium pump and engine/compressor. Modification of the hardware designs were recommended and implemented in order to obtain proper starting and operation of the engine. Energy balances were analyzed and compared with the analytical predictions. Engine performance maps were constructed as reference data for the system testing to be carried out in the next reporting period.

2.2 STIRLING ENGINE/HELIUM PUMP INTEGRATED TEST

In order to investigate engine performance independently of the free-piston linear compressor, a simple single-cylinder, double-acting helium pump load was coupled with the engine to accept the developed engine power. This approach reduces the analytical model from a three-mass free-body problem to a two-mass free-body problem. A detailed discussion of the dynamic characteristics of this system was given in the last semi-annual report.

Testing of this simplified two-mass system lead to a better understanding of the free-piston Stirling engine operation. Several initial problems of engine operation were identified and corrected and are discussed in detail in Section 3.3. The initial engine component test data indicated a lower power output than expected. Energy balance calculations showed that a significant quantity of energy was lost as blow-by leakage of the working fluid around the engine power piston. Figure 2-1 (a) depicts the energy balance of a typical test run with significant blow-by leakage.

A set of power piston seals were designed, fabricated and installed on the power piston to reduce the leakage. As indicated in Figure 2-1 (b), the energy loss due to leakage around the power piston with piston seals was substantially reduced and resulted in a 5 point

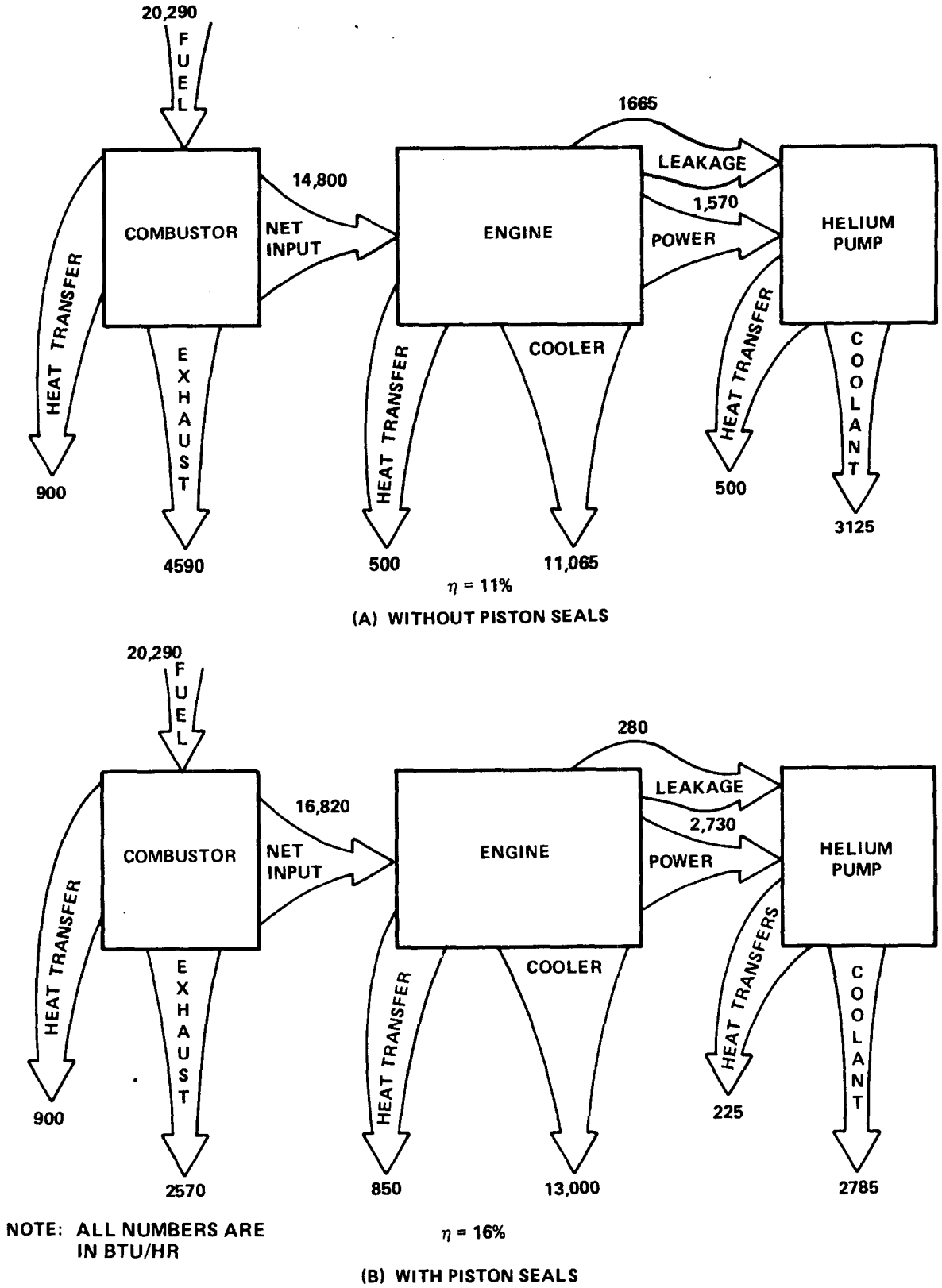

Figure 2-1. Engine Test Energy Balance

improvement in engine efficiency. Figure 2-2 further illustrates the positive effect of the piston rings on the engine power output at various firing rates.

The maximum power output obtained from the engine/helium pump integrated test was 1.4kW at an engine efficiency of 17%. The Proto I engine component test verified the predicted free-piston engine operational characteristics, and resulted in an experience base which could be applied to further testing with the inertia compressor.

2.3 STIRLING ENGINE/LINEAR COMPRESSOR INTEGRATED TEST

The integrated test of the Stirling engine coupled with the linear compressor characterized the three-mass dynamic system operation. This test differed from the complete HAHP system test in that water cooling was used as the heat transfer medium in both the condenser and evaporator rather than air side heat exchangers. Use of water provided greater flexibility in load variations than with the HAHP (air) system. A complete engine performance map could thus be constructed.

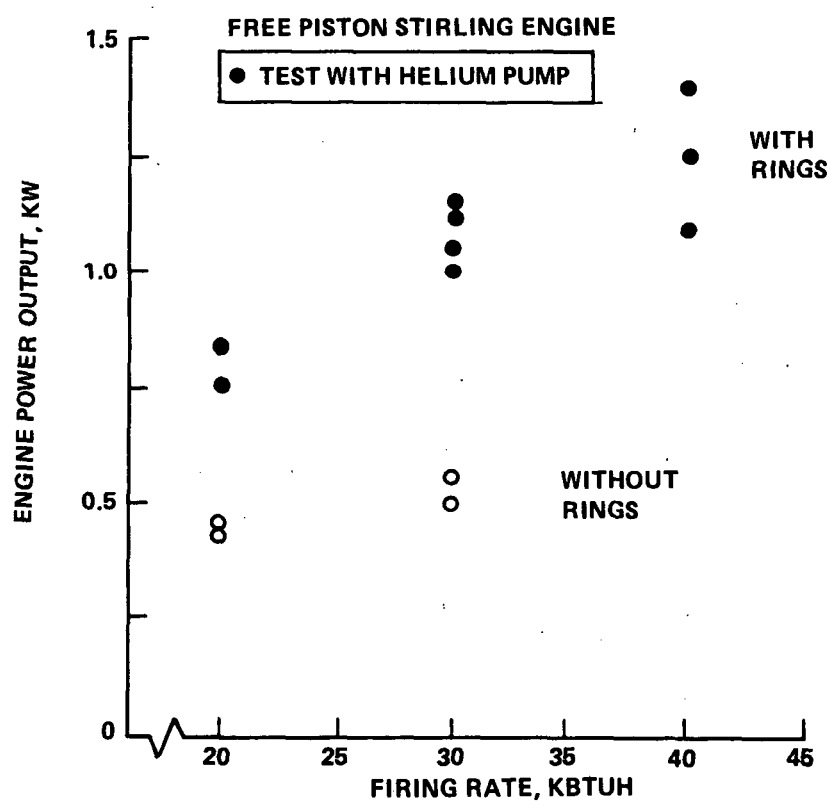

Figure 2-2. Effect of Piston Rings On Engine Output

Initial integrated test data showed that the engine power piston tended to oscillate off center, depending on the compressor load conditions. Figure 2-3 (a) is a displacer-piston phase diagram showing the eccentricity of the power piston oscillation. Analysis revealed that the initially designed diameter of the centering port orifices (0.03 inch) of the cylinder liner was undersized and unable to effectively maintain centered operation.

Enlargement of the centering port diameter to 0.10 inch resulted in the acceptable centered operation illustrated in Figure 2-3 (b). This improvement significantly increased the capability to test the Prototype I engine with a larger stroke and over a wider range of refrigerant load conditions. Variations of the test conditions are summarized in Table 2-1. Figure 2-4 illustrates the energy balance of a typical integrated test run.

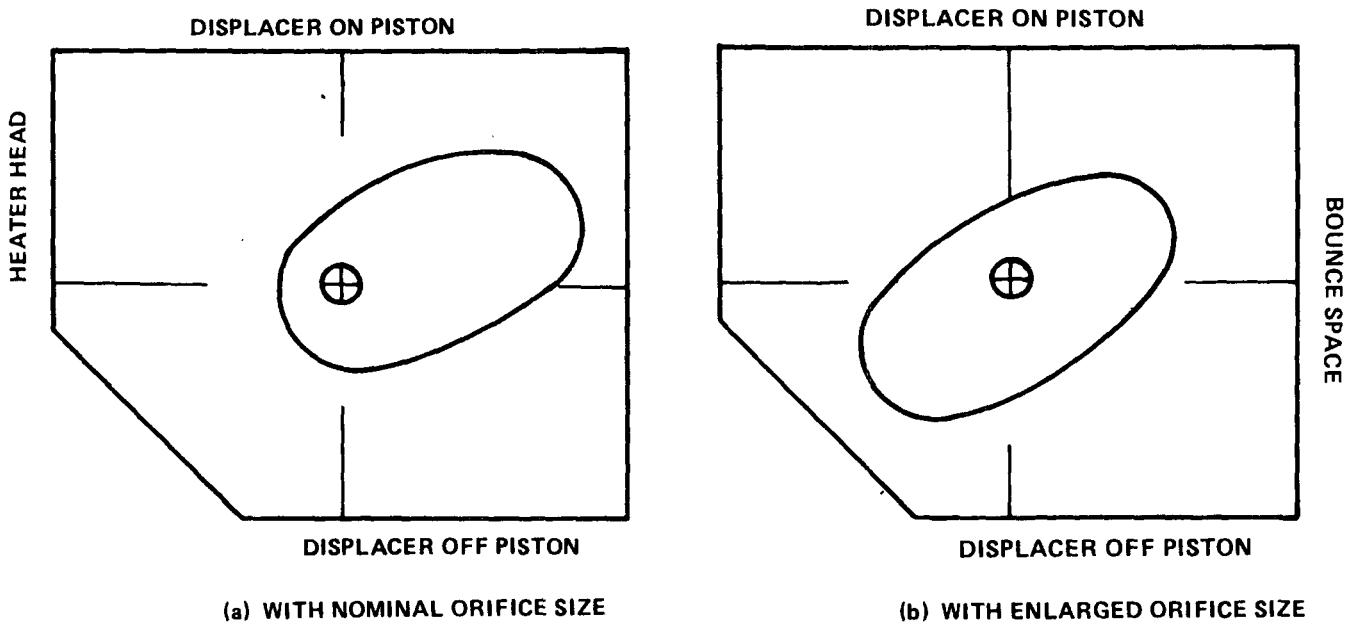

Figure 2-3. Piston-Displacer Phase Diagram

TABLE 2-1. ENGINE/COMPRESSOR INTEGRATED TEST CONDITIONS

• Engine Displacer Area	
- G1 Configuration	1.2 in^2
- G3 Configuration	0.78 in^2
• Combustor Firing Rate	30-60 KBTU/hr
• Helium Charge Pressure	300-1200 psia
• Compressor Pressures	
- Suction	65-120 psia
- Discharge	110-180 psia
• Operating Frequency	24-26 Hz
• Power Piston Stroke	0.6-1.7 in.

From test data, engine power piston stroke was identified as the fundamental engine parameter responding to a change in load conditions, i.e. either the compressor suction or discharge pressure level. The engine hot side temperature, efficiency and developed power responded to power piston stroke variations at a constant combustor firing rate. This is in contrast to a kinematically driven engine, where engine speed is the fundamental parameter responding to a load change and the engine piston stroke remains constant. Thus, for the free-piston Stirling engine, performance maps were generated by characterizing the engine power output as a function of power piston stroke.

Figure 2-5 illustrates two superimposed engine performance maps which were constructed from test data with the G1 and G3 displacer rod configurations specified in Table 2-1. The figure shows that, for a constant firing rate and a given engine configuration, the developed engine power decreases as the power piston stroke increases. This is due to the fact that as the power piston stroke is increased the engine swept volume is increased. For a constant heat input, the hot side temperature decreases as the swept volume (stroke) increases, as also indicated in Figure 2-5. Since the engine cold side temperature remains relatively insensitive to stroke, the Carnot cycle efficiency rapidly diminishes as the engine hot side temperature decreases.

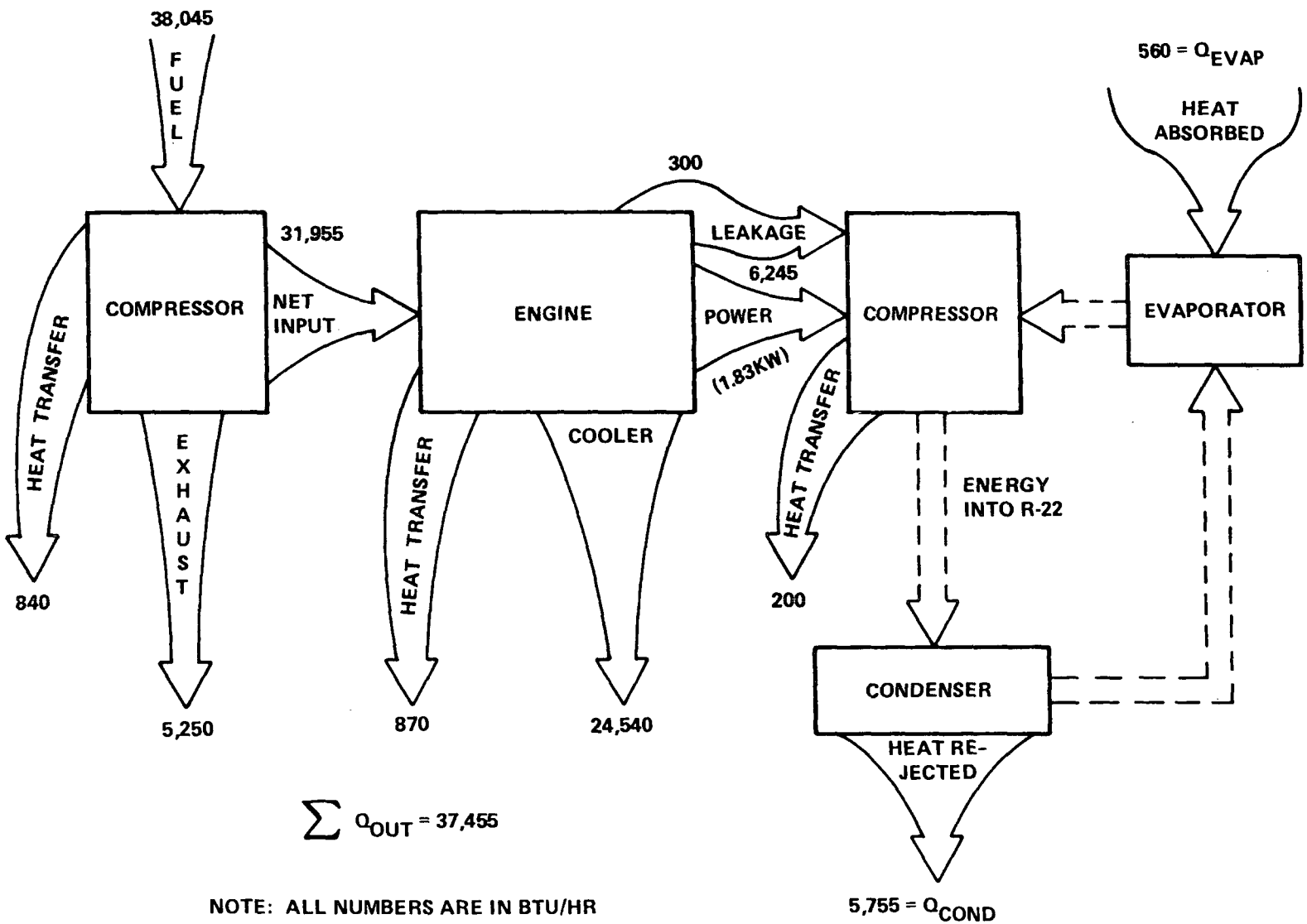

Figure 2-4. Typical Integrated Test Run Energy Balance

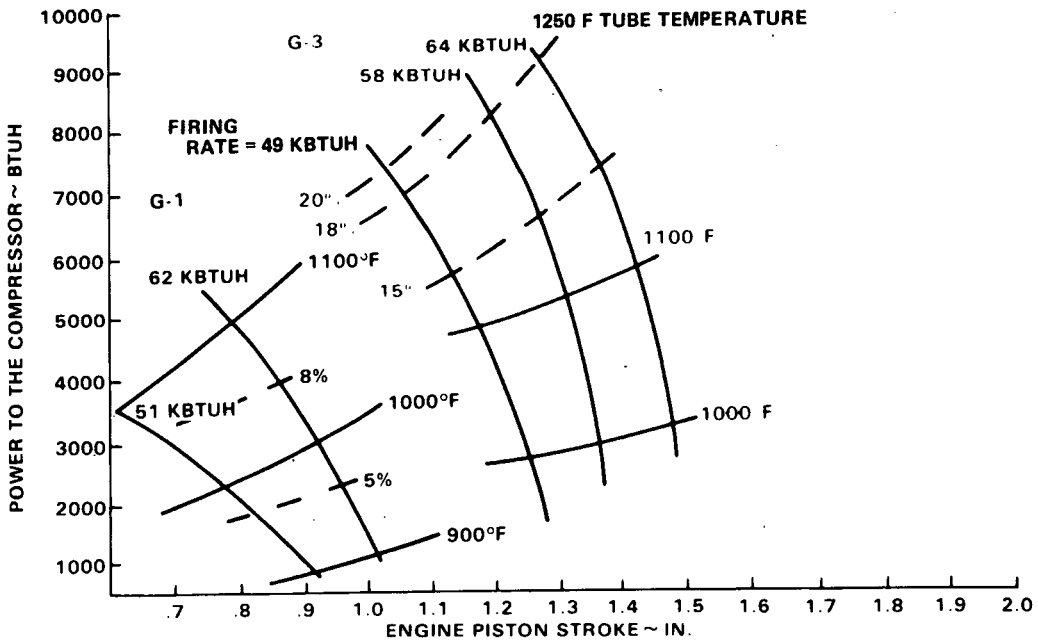

Figure 2-5. Proto 1 Engine/Compressor Performance Maps

TABLE 2-2. ENGINE OPERATING CHARACTERISTICS

	G1	G3
Displacer/Piston Phase Angle	70° - 100°	30° - 45°
Expansion/Compression Space Swept Volume Ratio	0.6 - 0.8	1.2 - 1.8

The importance of the proper timing of the displacer gas spring configuration is clearly illustrated in Figure 2-5. Table 2-2 summarizes the operating characteristics of the engine using G1 and G3 displacer rod configurations. As shown, the G3 configuration provides a more desirable smaller phase angle and larger swept volume ratio.

For the G1 configuration displacer rod, combustor firing rates greater than 62 KBTUH would be required in order for engine efficiencies in the 20% range to be realized. On the other hand, test data obtained with the G3 displacer rod configuration shows that a 20% engine

efficiency was obtained at a 49 KBTUH firing rate. Therefore, the G1 configuration permits engine operation with a larger power output at the optimum efficiency point than does the G3 configuration. Analysis has also shown that the G1 displacer rod configuration engine produces much more power than the design goal of 3KW power output at its maximum efficiency point. It is therefore somewhat oversized for operation with a three-ton refrigerant compressor and can be reduced in size for a 3 ton heat pump.

The engine/compressor integrated test has therefore demonstrated an engine efficiency of up to 20% with power output of up to 2.75KW. The engine performance characterized in Figure 2-5 will provide the data base for properly matching the more complex heat-pump system consisting of engine, compressor and air handler. Means to improve engine thermal efficiency will also be investigated based on a detailed energy balance identifying major heat losses.

The compressor performance measured from the integrated testing agreed satisfactorily with the previous compressor test results, except that excessive suction line superheat was observed.

Compressor performance was impaired due to heat transfer from the engine bounce space and pressure vessel to the compressor suction lines. The amount of superheat occurring in the suction gas influences the amount of work required to maintain a prescribed flow at a given pressure ratio. Figure 2-6 shows this effect and the effect on compressor mass flow for a specific engine output power level. Although the measured efficiency of the compressor during integrated testing was low, when the superheat effect is included, compressor efficiency matches original component test performance values. Butyl rubber insulation was installed on the coil spring tubes and was successful in limiting the amount of superheat. Without the insulation, approximately three times the amount of superheat would be experienced (45 to 130°F). These heat transfer effects will be addressed in future designs to control and further limit their impact on system performance.

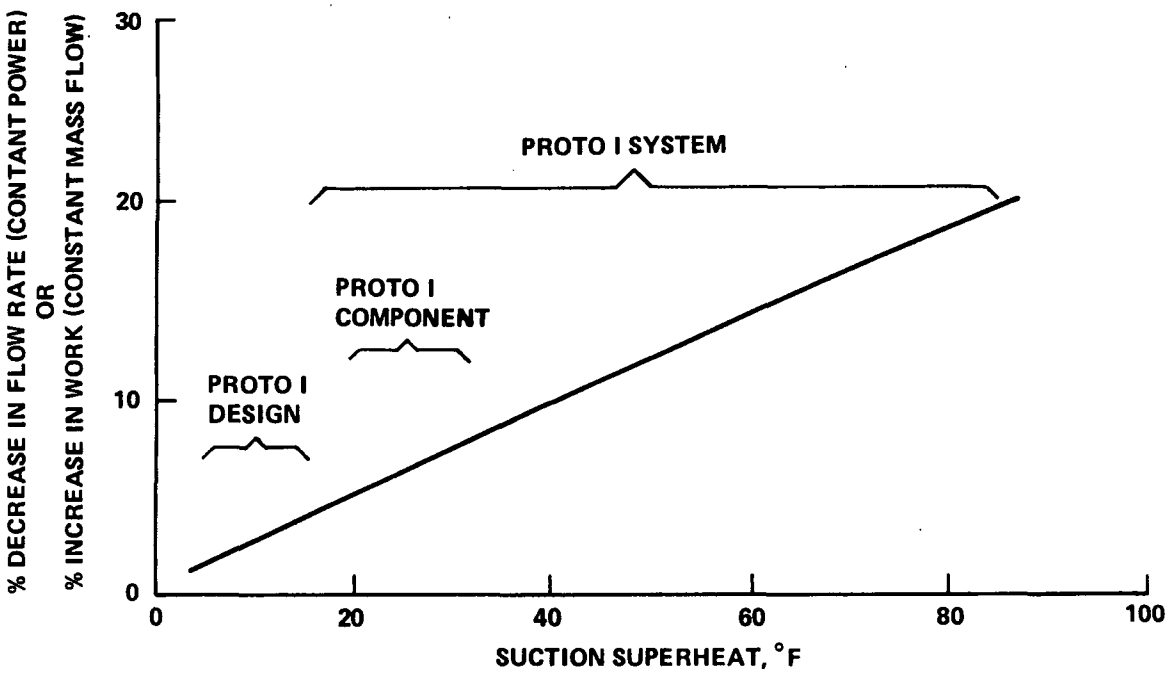

Figure 2-6. Effect of Superheat on Compressor Work

SECTION 3

PRODUCT DEVELOPMENT

SECTION 3
PRODUCT DEVELOPMENT

3.1 INTRODUCTION

The product development effort during this reporting period concentrated on the component and subsystem level testing of the combustor, Free Piston Stirling Engine (FPSE) and the linear inertia compressor. Developmental testing of the combustor assembly continued in both the component mode and in combination with the FPSE. Fabrication techniques for the metallic burner elements were also improved.

Performance testing of the linear inertia compressor on the component test stand was successfully completed. These tests were conducted over a range of frequencies, excitation strokes and refrigerant suction and discharge operating conditions. Once characterized, the compressor units were available for engine level evaluation. Endurance testing of the tubular spring coil compressor suction and discharge lines was conducted for 2259 hours. This testing evaluated a randomly sampled tube for 2.42×10^8 cycles, two orders of magnitude beyond the knee of the fatigue curve, at design stroke and frequency. The integrity of the design was established and the nested tubular coils were installed as part of the FPSE/compressor assembly.

Component testing of the FPSE with the helium pump loading device was successfully completed. The linear inertia refrigerant compressor was subsequently installed on the Stirling engine and the integrated combustor/FPSE/inertia compressor test program was conducted. During this test period, positive seals were incorporated in the engine power piston assembly. Displacer and power piston centering mechanisms were also improved. In addition, the capability to adjust the displacer rod area/displacer gas spring volume relationships to better match the engine with compressor loads was demonstrated.

The integrated combustor/FPSE/compressor test hardware was then installed in the outdoor unit of the air handler system. The total heat pump assembly was completed including

installation of the controls subsystem. Checkout testing of the system hardware was initiated with performance evaluations scheduled to be conducted during the second half of this year.

Descriptions of the component and subsystem development progress and the mid-year status of all subsystems are presented in the following sections.

3.2 COMBUSTOR

3.2.1 SUMMARY

Testing of the Proto I combustor continued during this reporting period. Testing was performed with the engine on the integrated test stand. The test data confirmed that the combustor, when integrated with the engine, will satisfy the exhaust emission and pressure drop requirements. The temperature distribution within the combustor was found to be as predicted from combustor test stand testing.

A reevaluation of several components will be made during the next reporting period as a result of performance measured during integrated testing. The ignition components provided unreliable performance due to the formation of an oxide layer which impeded their function; alternate materials will be investigated. The seal which prevents leakage of the combustion products past the combustor-engine interface exhibited poor wear characteristics. The seal used is a Kaowool material and is used in the form of a rope type packing. Alternate sealing concepts will be evaluated during the next reporting period.

Failure of the burner element along the seam weld occurred. A design change to the seam weld joint was made and additional testing will determine if the change extends the useful life of the burner.

Development of a ceramic burner also continued during this period. A detailed description of these activities can be found in paragraph 4.5.3.

3.2.2 PERFORMANCE

Integrated Stirling engine-combustor test data confirmed combustor performance as predicted from combustor test stand data. Exhaust emission and pressure drop requirements were met. The temperature distribution within the combustor was found to be as predicted. A typical temperature distribution, as measured during the integrated test, is shown in Figure 3-1. Figure 3-2 shows measured combustor efficiency, average tube and air preheat temperature as functions of exhaust temperature from both previous bench testing and the integrated tests.

As a result of accumulating time at operating temperature, several of the combustor components exhibited less than satisfactory performance. The spark igniter and flame rod ignition components did not provide reliable performance. As operating time increased, problems associated with premature shutdown, delayed ignition or no ignition began to occur. All three conditions were caused by the formation of an oxide layer on the electrode which resisted spark generation or flame sensing. Upon removing the surface oxide the components perform satisfactorily. The electrode material used in both components is Hoskins 667 which is a nickel-manganese alloy. Alternate materials, such as Kanthal, silicon carbide, etc., will be investigated during the next reporting period. Relocations of these ignition components will also be examined in order to alleviate the oxidation problems.

A packing type seal is used to prevent leakage of the combustion products along the combustor-engine interface. The seal consists of four layers of 0.5 inch diameter Kaowool rope. The seals and their location are shown in Figure 3-3. The Kaowool material was chosen because it is a high temperature ceramic fiber material. The rope packing is sufficiently flexible to provide sealing while undergoing reciprocating as well as radial motion of the engine. The Kaowool material, however, does not have a high abrasion resistant characteristic. As a result of the integrated combustor-engine test, it has been observed that the rope seal is eroding due to abrasive wear. The erosion results in a heat leak which will degrade combustor efficiency. Alternate sealing concepts and seal materials will be investigated during the next reporting period.

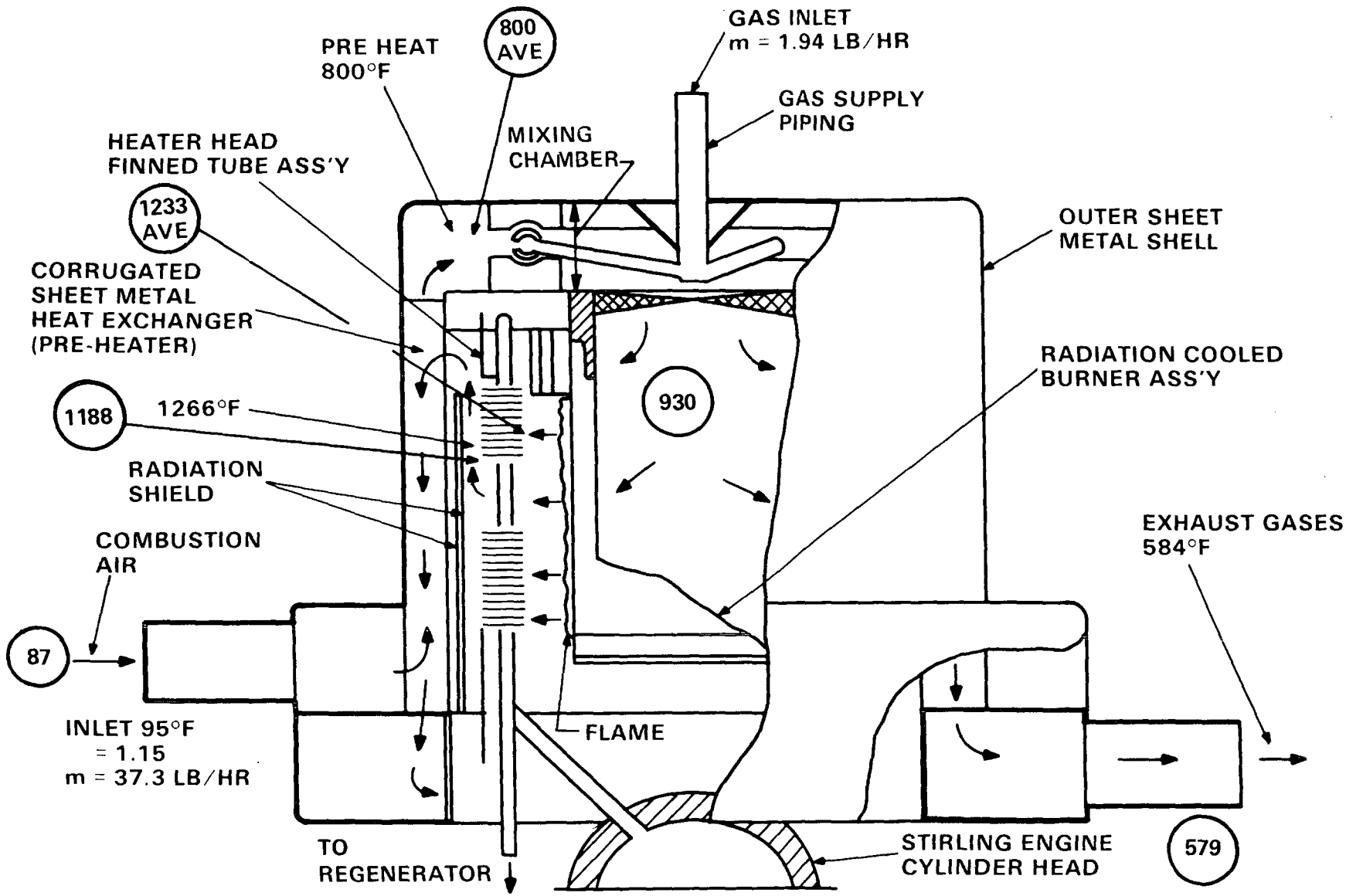

Figure 3-1. Typical Temperature Measurements (°F)
40K Firing Rate - Engine Testing

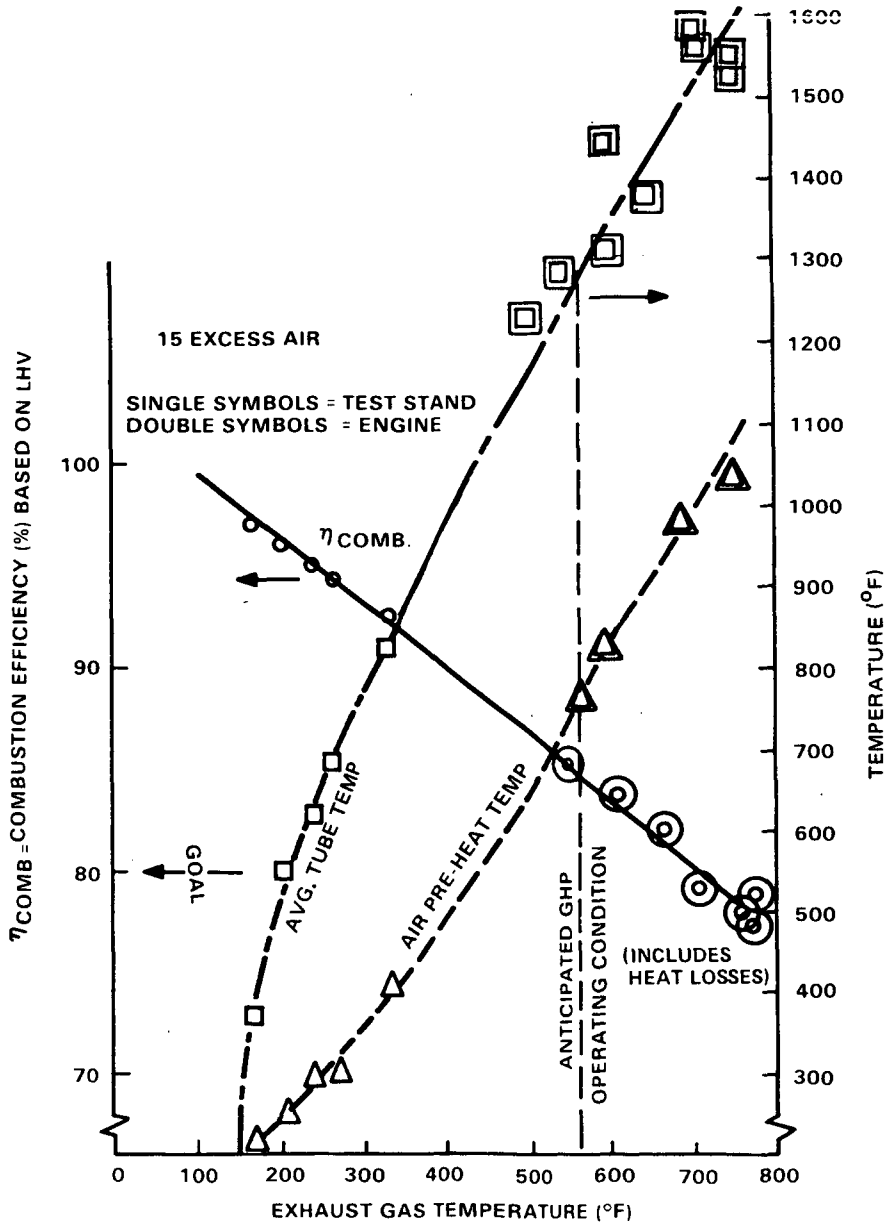

Figure 3-2. Combustor Performance Test Results

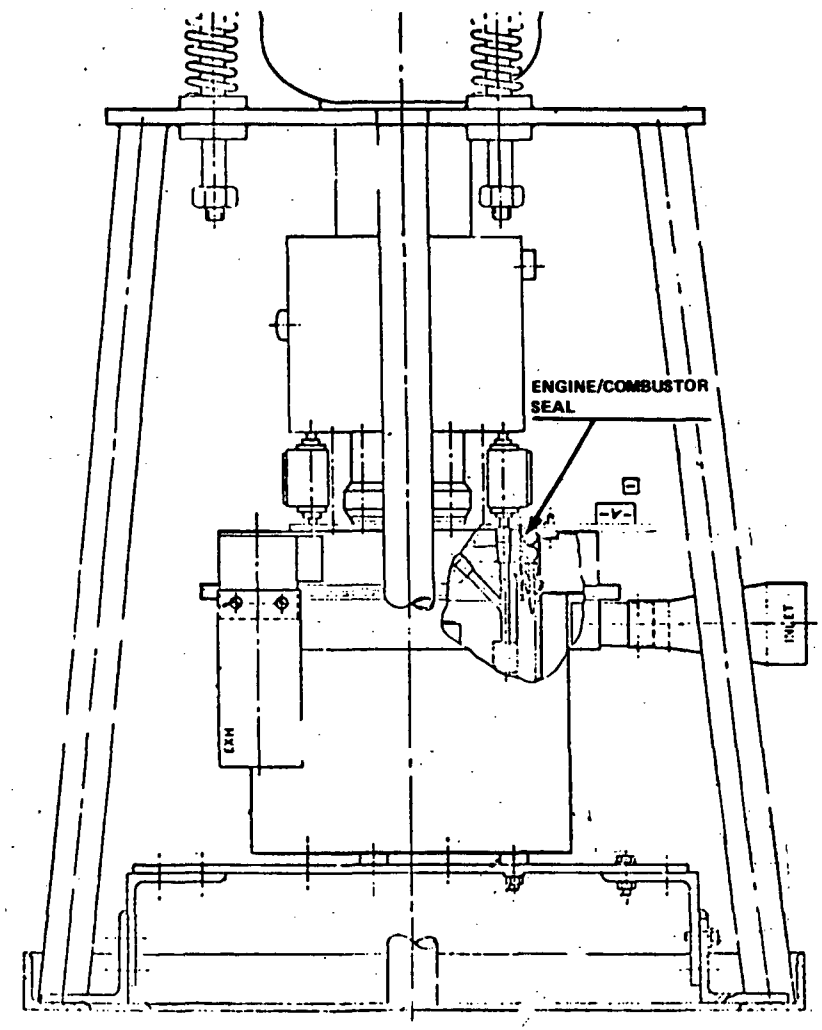

Figure 3-3. Combustor/Engine Interface Configuration

Several instances of flashback occurred during integrated testing with the engine. This condition may have been caused, either directly or indirectly, by the unusually high operating temperature of the combustor. The high temperatures occur when the engine does not operate at full stroke and does not fully utilize the energy generated by the combustor. Another possible cause is due to the degradation of the burner element. Examination of the burner element after flashback had occurred indicated failure along the seam weld of the burner. This has been a reoccurring problem in the past. A design change to the seam weld joint (from a tapered butt to a step joint) was implemented during this reporting period. Additional testing will be required to determine if the change extends the useful life of the burner element. During the next reporting period discussions will be held with the supplier of the burner element (Brunswick Corporation) regarding a one piece construction element.

3.3 STIRLING ENGINE

3.3.1 SUMMARY

Component testing of the Free Piston Stirling Engine (FPSE) was started late in 1977 and continued into the first quarter of 1978. Tests were completed on three Prototype I engine assemblies coupled to a helium pump load designed and fabricated as part of the engine component test facility. An assembly drawing of the FPSE/helium pump is presented in Figure 3-4, and a photograph of the power piston/displacer assembly mounted to the helium pump is shown in Figure 3-5. Testing of the first engine assembly was interrupted due to a slow leak at a braze joint so the second engine was installed and the test program was continued. The third engine was subsequently tested at the same test conditions.

The component test effort was completed in accordance with the test plan presented in the last semi-annual report (July through December 1977). The purpose of the component test effort was:

- Proof of design concept.
- Initial characterization of engine operation with the two-mass system (helium pump load).
- Optimization of engine gas springs and related mass characteristics.

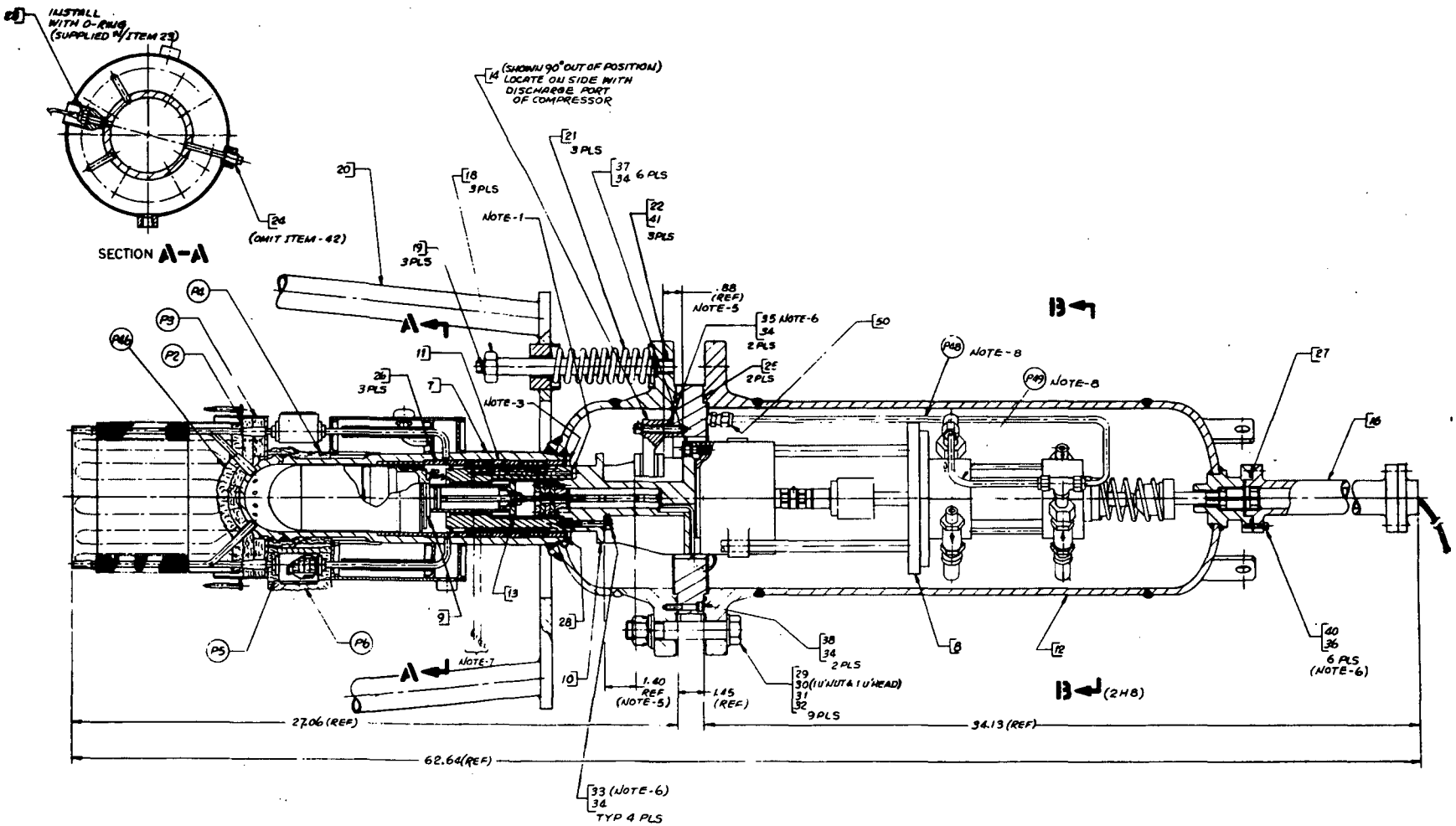

Figure 3-4. FPSE/Helium Pump Assembly

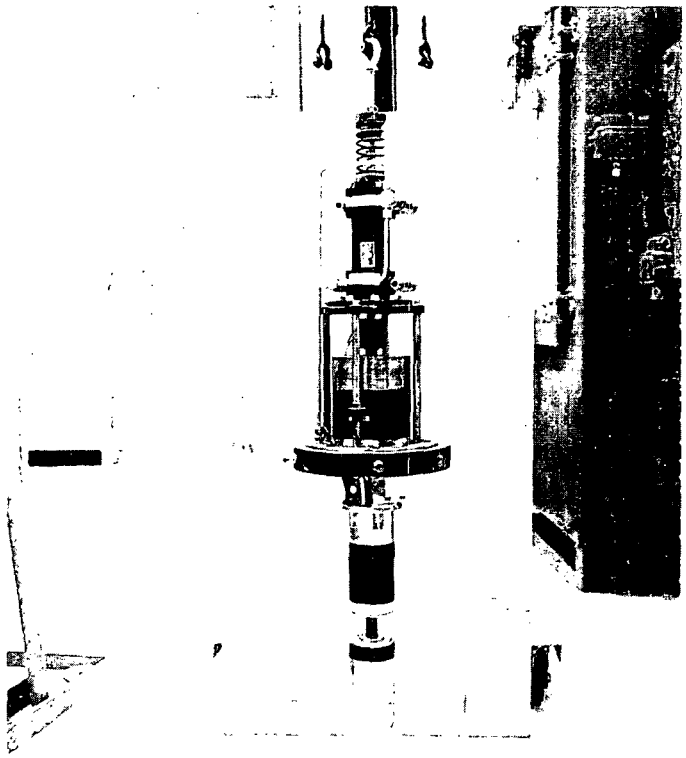

Figure 3-5. STIRLING Engine Piston/Load Assembly

- Performance evaluation of the FPSE configuration.
- Identification of design deficiencies and corrections.
- Establishment of an operational experience base for future FPSE/inertia compressor testing.

The component test program was successful in meeting the objectives of the test plan. Section 2 of this report presents a description of the engine performance test results and interpretation.

3.3.2 BEARING SLEEVE SEALS/PISTON RING DEVELOPMENT

Early test results showed that engine power output was below expectations. Subsequent energy balance calculations identified the problem to be working fluid blow-by/leakage around the engine power piston. A design change was completed to incorporate a positive seal in the piston bearing sleeve, and the parts were modified. The seals which were incorporated were an existing pressure activated design using a carbon-graphite impregnated PTFE material. The seals were procured from the Bal-Seal Engineering Company.

A photograph of a power piston assembly with the piston ring seals installed is shown in Figure 3-6. As noted in Section 2, the energy loss around the power piston was substantially reduced by the piston seals and the resulting engine efficiency improvement was significant (Figure 2-2).

It was also observed early in the test program that the carbon-graphite displacer bearing/seal ring and power piston bearing sleeve were wearing at a high rate. The increase in radial leakage was unacceptable, and the resulting dusting was a potential regenerator contaminant. Replacement rings and sleeves were fabricated from a graphite filled polyimide material, and the wear problem was significantly reduced. Wear rates during testing were low but will require endurance life tests to quantify.

The difference in thermal expansion and tensile properties of the polyimide versus carbon-graphite materials introduced a design change requirement. Instead of the "free-floating"

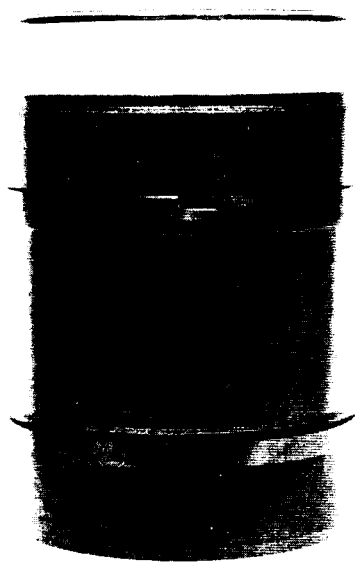

Figure 3-6. Proto 1 Free Piston Stirling Engine Power Piston Assembly

configuration used with the carbon-graphite displacer ring piston sleeve, the polyimides were installed with a shrink-fit. As a result of this change, the radial clearances between the outside diameters of the displacer ring and piston sleeve and the inside diameter of the engine housing liner were reduced at operating temperatures. Initial testing with the new configuration/materials resulted in a non-centered piston operation, the piston motion being biased toward the bounce space. It was concluded that the smaller radial clearance reduced leakage past the piston sleeve and that the piston centering port mechanism was either too small or had insufficient time to port. The sleeve was subsequently altered to allow additional porting time. Test conditions were repeated and the displacer and piston motions were observed to be both centered and very stable. A schematic of the piston/liner centering mechanism is presented in Figure 3-7.

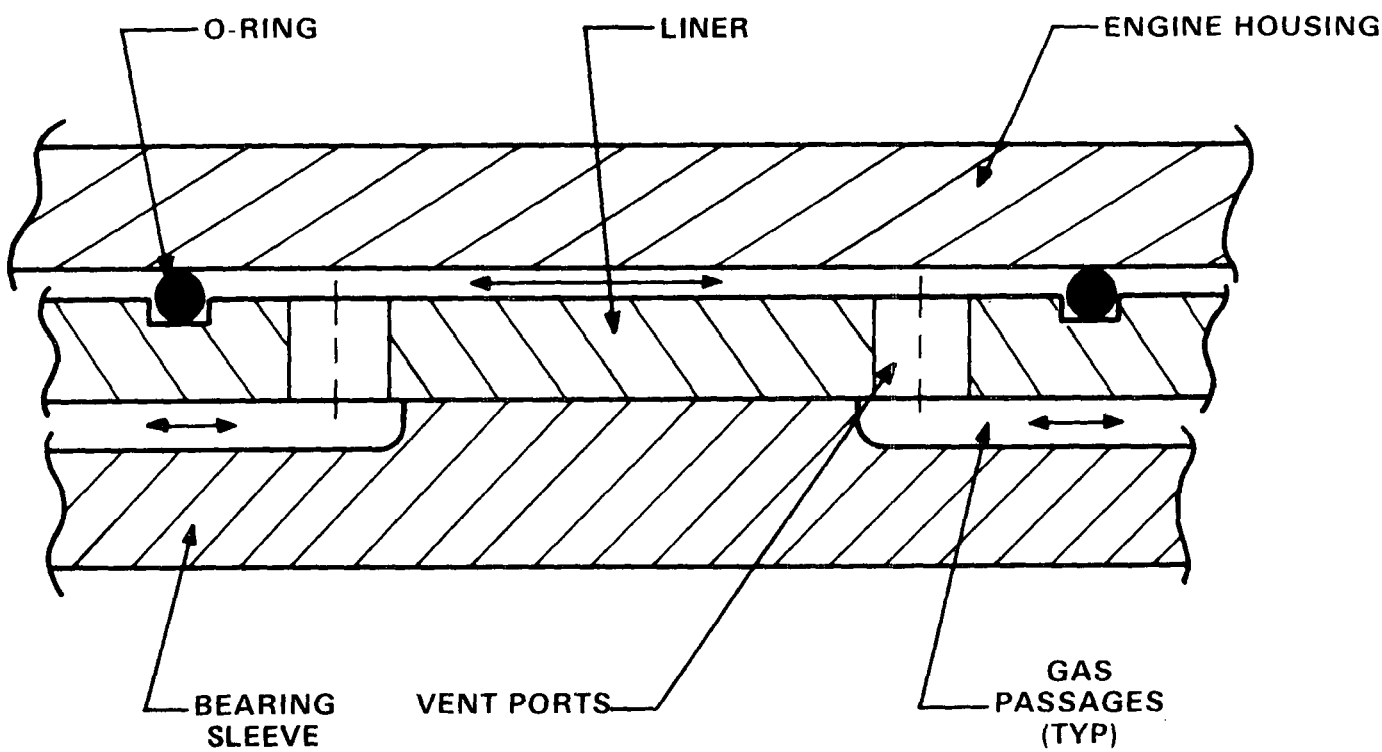

Figure 3-7. Proto 1 Piston/Liner Centering Mechanism Hardware

3.3.3 TUNING TECHNIQUES

To provide the necessary tuning options in an engineering prototype free piston Stirling engine, design features were incorporated into the Proto I engine that permit changing the displacer gas spring characteristics. Since the gas spring rate is a function of both the displacer rod area and the gas spring volume, provisions were made for changing both variables. Three different displacer rod diameter options were provided; G1 = 1.25 inches, G2 = 0.8 inch, and G3 = 1 inch. (rod areas of 1.23, 0.5 and 0.785 square inches, respectively). Figure 3-8 present sketches of these displacer rod configurations. Displacer gas spring volume ratios can be changed by the addition or deletion of spacers installed within the gas spring cavity. Volume ratios of 1.364 to 1.629 for the G1 configuration, 1.114 to 1.18 for the G2, and 1.194 to 1.483 for the G3 can be provided.

Calculations predicting that the two-mass engine/helium pump system would start more readily with the larger diameter displacer rod were confirmed by Proto I tests. Additional tuning effects are presented later where the Stirling engine/compressor integrated test results are discussed.

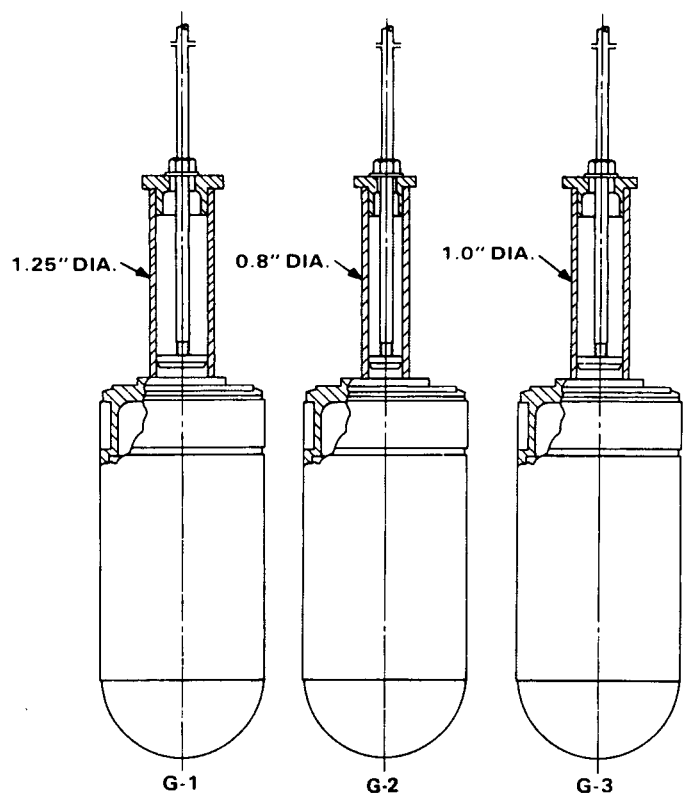

Figure 3-8. Proto 1 Engine Test Displacer Configurations

3.4 COMPRESSOR

3.4.1 SUMMARY

The Proto I free piston compressor development effort met several significant milestones in the first half of 1978. These accomplishments included: 1) the compressor development testing was completed on the Proto I compressor units, 2) the tubular coils used as suction and discharge lines for the compressor were tested and proven reliable, and 3) the compressor was integrated with the free piston Stirling engine and testing initiated.

Several design deficiencies were identified during testing. During compressor component testing, material and lubrication problems were encountered with the piston and liner. A change in piston material and a modification in the lubrication mechanism alleviated this problem. Several mechanical problems with fitting and seals were encountered and solved. The compressor gas spring pressure regulating system was tested and performed as designed: however, the heat pump operating pressure characteristics changed from initial predictions and it was necessary to remove the valves. Subsequent testing was done with the gas spring volumes referenced to suction conditions. The Proto II design will utilize the new pressure conditions in the design of the regulating system.

The tubular spring coils were successfully tested well past the number of cycles corresponding to the fatigue endurance limit of the PH 15-7Mo material (10^8 cycles versus 10^6 cycles). Three tubes failed during endurance and compressor testing. These failures were due to manufacturing weld defects and/or "laps" in the base material of the tubing supplied by the vendor. Tighter controls placed on the manufacture of the tubing are expected to eliminate the problem.

The Proto I compressor was successfully integrated with the free piston Stirling engine and development testing initiated. The Proto I compressor installed in the engine with the four tubular suction and discharge coils is shown in Figure 3-9. The coils have been insulated with 1/8" thick butyl rubber to minimize heat transfer to the freon from the helium gas bounce space environment. A primary problem with the compressor-engine testing was the

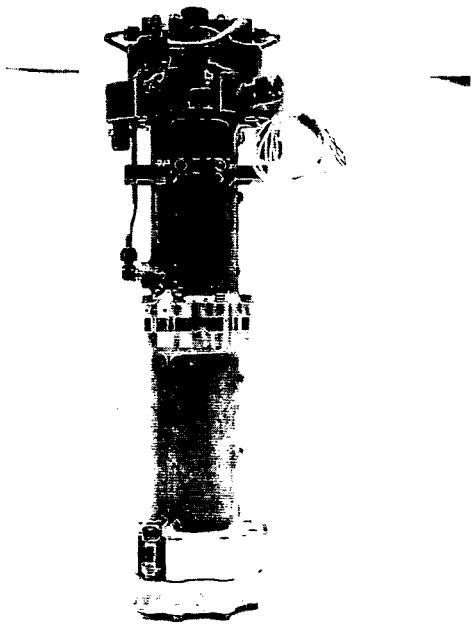

Compressor Assembly

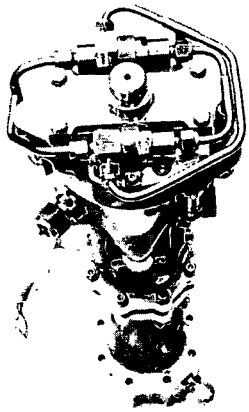

Gas Spring Pressure Regulating Valves

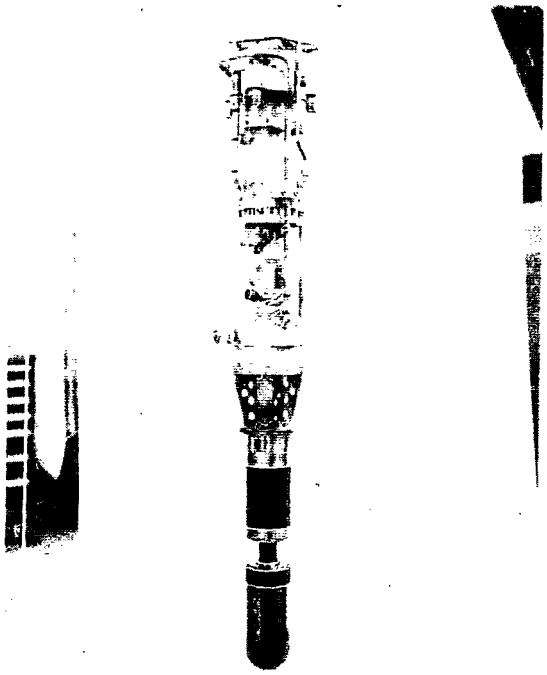

Compressor - Engine Assembly

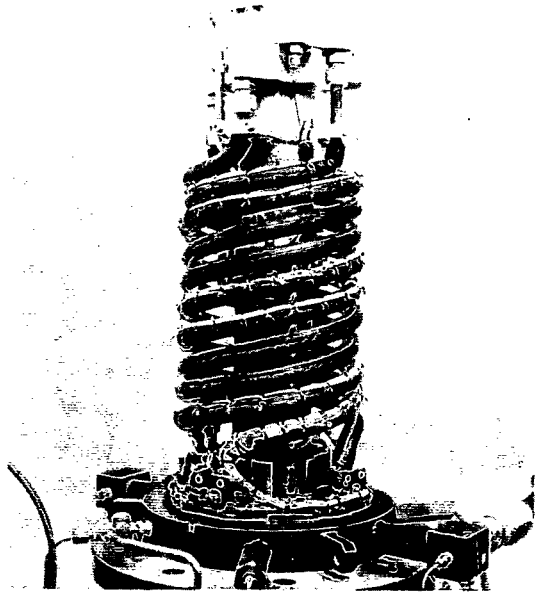

Compressor With Insulated Tubular Coils

Figure 3-9. Proto I Compressor

high compressor weight which drove the engine operating frequency down from a nominal 30 Hz to approximately 25 Hz and resulted in reduced compressor output.

A detailed discussion of the compressor development and testing is presented in the following paragraphs. Further information on the compressor is presented in the engine-compressor integrated test section.

3.4.2 PERFORMANCE

Proto I compressor testing continued into this reporting period. Component performance testing was initiated on the second (SN-2) Proto I compressor, rather than continuing testing on the first compressor, in order to include the gas spring pressure regulating system. This second unit was configured to allow the regulating valve system to be mounted on the compressor discharge head. It was also modified to lighten the engine-compressor reciprocating mass. Due to test facility limitations, it was not possible to test the unit at the design point operating conditions of 1.7 inches stroke and 30 Hz. This limitation prevented measurements of compressor performance at the design pressure ratio (3.0) and flow rate (540 lb/hr). Tests performed at pressure ratios of 2.0 to 2.5 and flow rates to slightly over 400 lb/hr verified the analytically predicted compressor performance and permitted extrapolation to the design point. The performance map of the Proto I compressor is shown in Figure 3-10. Also indicated are the region of testing for Proto I and some specific points of operation.

The compressor performance at the 95°F day design point is predicted as follows:

Ambient Temperature	95°F
Suction Pressure	91 psia (25°F superheat)
Discharge Pressure	276 psia
Mass Flow	540 lb/hr
Isentropic Efficiency	65%
Power Required	3.1 KW

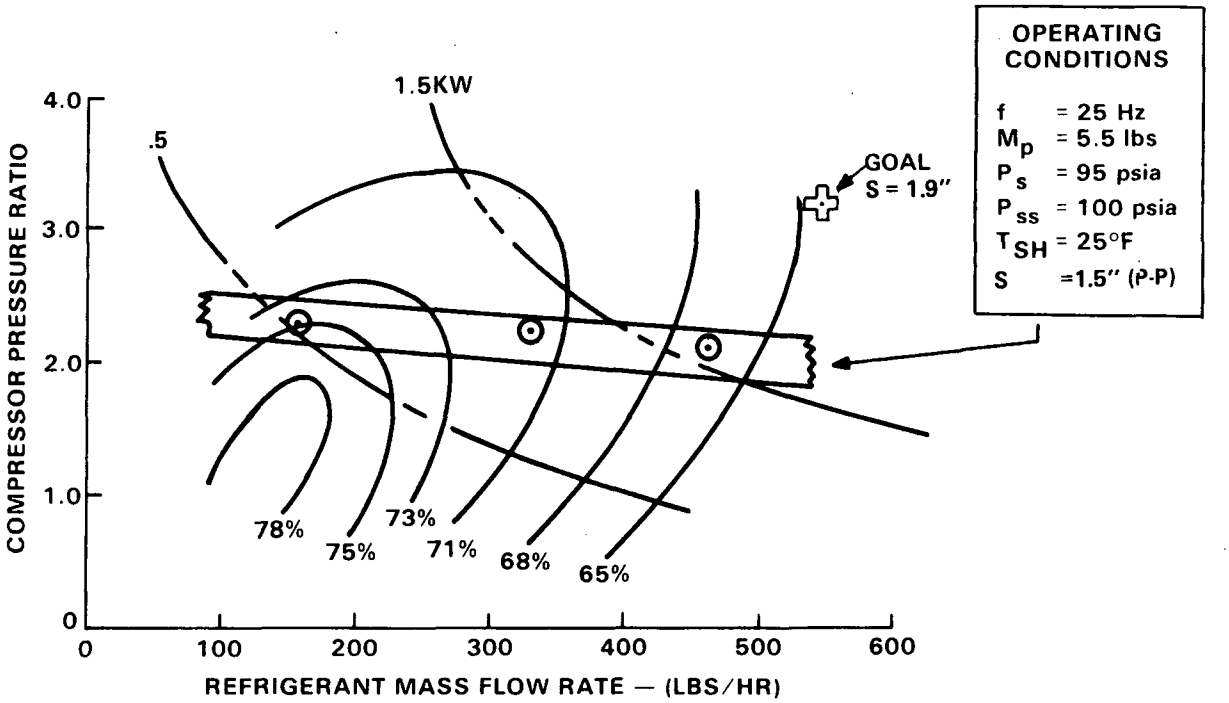

Figure 3-10. Proto 1 Compressor Performance

The power requirement is in part due to the level of superheat of the suction gas in the compressor manifolds and tubular spring suction lines. In component testing, superheat levels of 25°F were observed while in integrated engine-compressor testing superheat in excess of 50°F was measured. Further discussion of superheat effects on the compressor when integrated with the engine is presented in paragraph 3.5.

3.4.3 GAS SPRING PRESSURE REGULATING SYSTEM

The Proto I compressor component testing was initially conducted with the gas spring pressure regulating system installed. This system consists of two valves, one supply pressure regulator and one relief valve, which maintained a preselected reference pressure at feed-through ports into the compressor gas spring volumes. At compressor piston mid-stroke, these ports were opened by the piston, acting as a spool valve, permitting gas flow into the gas spring volumes. Maintaining the compressor gas spring reference pressure higher than suction pressure in the heating mode assures stable operation of the engine-compressor over the entire operating range of ambient temperatures.

The compressor gas spring valves provide a regulated pressure of 100 psia, based on suction and discharge pressure conditions according to the relationship shown in Figure 3-11. In Proto I testing, the valves were found to be functioning correctly but because of actual suction and discharge pressures, a higher than desired regulated pressure was produced. The high pressure in effect "stiffens" the gas spring and reduces piston stroke for a given compressor housing excitation (engine stroke and frequency). The reduced piston stroke limits the flow rates obtained from the compressor. Further analysis and testing indicated suction-discharge pressure relations shown in Figure 3-11 (discrete points). These varied significantly from initial expectation. With these pressure relationships, the valves would not maintain the correct pressures in the gas spring reference volumes and were therefore removed. Removing the valves allowed testing on the compressor test stand at higher flow rates and pressure ratios and more closely matched the compressor operation to the engine. The gas spring volume was referenced to suction, which was near the desired pressure for all ambient conditions except the 30°F and 0°F days. The valves will require reconfiguration to allow stable engine/compressor operation at the lower range of ambient temperatures.

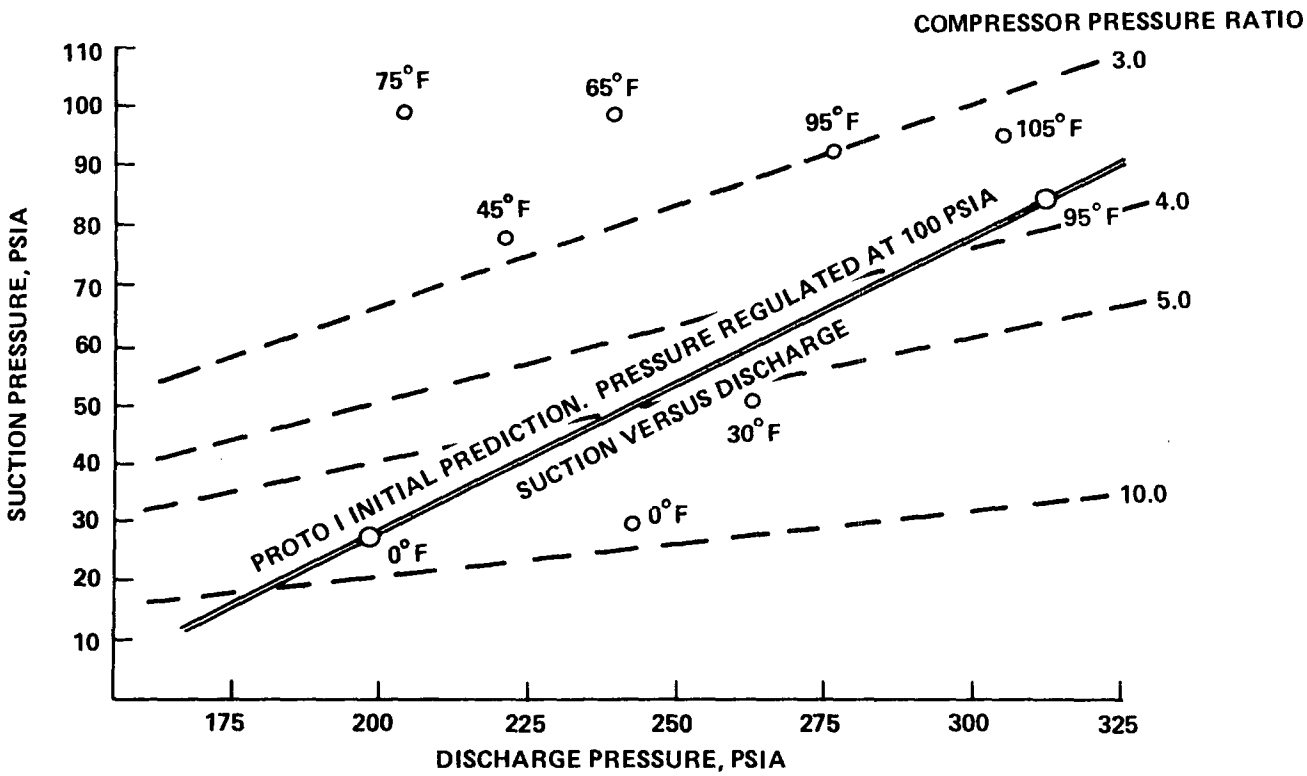

Figure 3-11. Proto I Pressure Regulation Schedule

3.4.4 MECHANICAL PERFORMANCE

The primary mechanical problem uncovered by compressor testing was wear and galling of the compressor piston. Investigation of the problem identified three contributing factors. These were piston and liner materials, piston and liner design and the lubrication system.

The piston and liner material had been changed from that used in the engineering research compressor (ERC), from an A-35 cast iron to a reduced porosity fine-grade GC-40 Meehanite cast iron. This was done to alleviate machining difficulties due to voids in the A-35 and thus increase reliability of the individual components. The Proto I piston and liner have a less porous surface because of the finer grade GC-40 and therefore did not have the oil retention qualities of the A-35. The GC-40 does, however, have a finer distribution of free graphite for better wear characteristics. These two factors offset one another but the oil retention qualities are apparently much more significant. Pistons were subsequently fabricated out of the A-35 cast iron and tested in conjunction with the other changes described below without reoccurence of the lubricant retention problem.

The configuration of the pistons and liner also contributed to the wear problem. Many sharp edges existed on the liner penetrations tending to wipe away the oil film from the piston. These were modified, and the chamfer on the back edge of the pistons was also increased to alleviate a similar situation. The pistons also had two circumferential grooves at either end for oil retention and distribution. A third groove was added to the center of a set of GC-40 cast iron pistons. These pistons then performed well during testing.

The final factor affecting piston lubrication was the gas spring pressure regulation system. The compressor is self-lubricated by oil mixed with and transported by the freon refrigerant. The regulating valves add restriction to the freon flow and therefore reduced oil flow into the gas spring area. This produced marginal lubrication of the liner and piston. When the valves were removed and the gas spring referenced to suction pressure, the problem did not reoccur. Future designs will maintain a controlled gas flow through the gas spring reference volume to ensure an adequate oil supply under all conditions.

3.4.5 TUBULAR COILS

Four tubular coils serve as suction (3) and discharge (1) lines for the heat pump compressor when mated with the FPSE. During engine operation these coils must permit the 1.7 inches (nominal) stroke and 30 Hz motion of the compressor and survive over the life of a unit (10^9 cycles).

The tubes were fabricated of PH 15-7Mo steel which has a fatigue endurance limit of 106 KPSI at 10^6 cycles. The maximum alternating stress due to bending is shown in Figure 3-12 and occurs in the 90° transition bend from the coil to the straight section parallel to the coil axis. The coil oscillates about its equilibrium point, and thus does not produce a mean stress that would reduce the endurance limit. (Reference Figure 3-13 (a)).

Testing of a spring tube was initiated during the last reporting period and continued into this period. The test set-up, shown in Figure 3-13 (b), simulated design point operation of 1.75

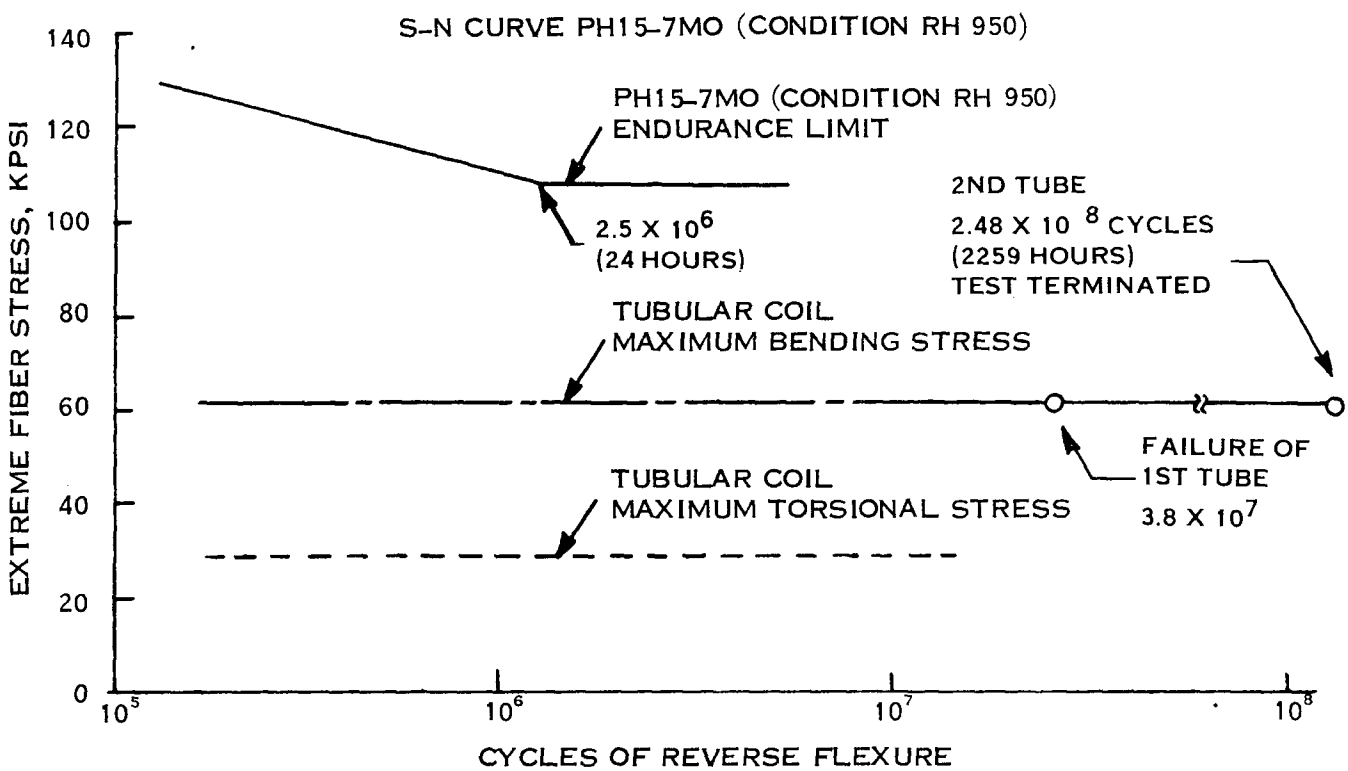

Figure 3-12. Proto 1 Coiled Spring Tube Design Stress Data

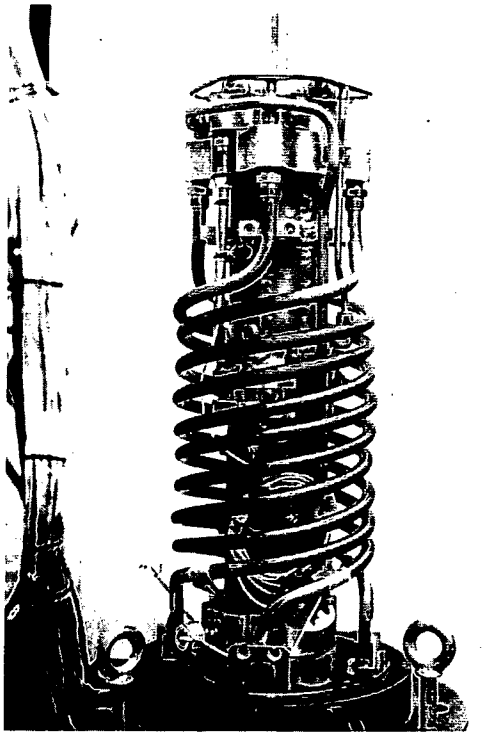

Figure 3-13 (a). Tubular Coils Installed on Compressor and Engine

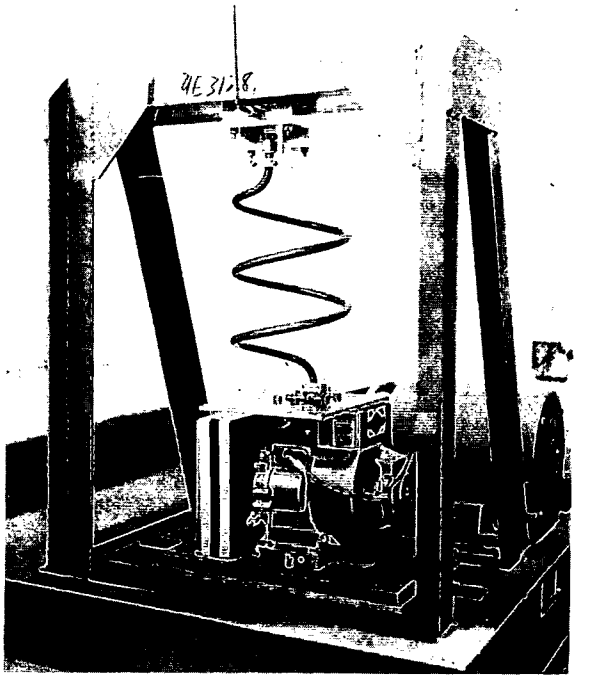

Figure 3-13 (b). Tubular Coil Endurance Test Stand

inches stroke and 30 Hz. Testing continued without incident well past the number of cycles corresponding to the endurance limit of the material. When failure occurred at 3.8×10^7 cycles, examination of the tube revealed a 3/8 inch long crack at the outside radius of the 90° transition bend. Failure analyses indicated the crack originated from a series of laps in the outer surface of the tube, acting as stress risers. These laps occurred during the tubing manufacturing process and were an isolated case. Inspection of the other tubes revealed nothing similar.

A second spring tube was selected and installed on the spring tube endurance test stand. This tube accumulated a total of 2259 hours or 2.42×10^8 cycles, at which time it was decided to stop testing. The test ran two orders of magnitude beyond the knee of the published S-N curve (see Figure 3-12) for the material and thus verified the design.

Two other failures occurred in the spring tubes during testing. One tube failed during engine testing at 10^5 cycles and another during the forming operation. Metallographic examination indicated the failures were due to weld imperfections on the ID in the form of fissures along the fusion line. This defect was present in all the tubing from the same lot and varied in depth up to a maximum of 45% of the wall thickness. Whenever such a defect occurs in this highly stressed area, a tube failure is probable.

The tubes presently installed on the Stirling engine/compressor assembly are performing satisfactorily. In future orders, closer manufacturing and inspection controls will be utilized to eliminate weld and surface defect problems. In addition, the material selection and design will be reviewed for possible improvement during the Proto II design effort.

3.5 STIRLING ENGINE/COMPRESSOR INTEGRATED TEST

3.5.1 SUMMARY

After completion of the component test program with the engine coupled to a helium pump load, the test components were assembled for the integrated engine/compressor test. The displacer/piston assembly was mated to the Proto I inertia compressor and installed in the engine housing. The tubular coil springs and related interface housing subassembly was

completed and installed. After the instrumentation installation was completed and checked out, the pressure vessel was installed thus completing the test hardware build-up. The assembly drawing for the configuration is presented in Figure 3-14, and a photograph of the engine/compressor/combustor assembly mounted in the integrated test facility is shown in Figure 3-15. Performance testing of the engine/compressor integrated assembly was then initiated in accordance with the Integrated Test Plan Summary in Appendix A.

3.5.2 PERFORMANCE

Performance evaluation of the engine/compressor integrated assembly was conducted with energy input levels ranging from 20 through 64 KBTU/HR, engine bounce space charge pressures of 25 to 80 Bars, and with displacer rod configurations G1 (1.23 in^2) and G3 (0.78 in^2). Data reduction, interpretation and analyses of the data obtained from the Proto I integrated test effort is presented in Section 2 of this report.

The test effort generally followed the test plan during this reporting period. Problems encountered were resolved quickly, minimizing test delays. The first anomaly occurred early in the test sequence when compressor performance was less than expected although steady-state engine operation with the compressor was quite stable. Two factors were found to be influencing compressor operation: helium gas infiltrating into the refrigerant system, and, excessive friction between the compressor piston and the walls of the cylinder in the gas spring area.

Helium gas was found to be infiltrating into the compressor suction manifold at high levels of engine charge pressure. The resulting partial pressure of helium gas in the R22 system prevented normal operation of the simulated heat pump load. The source of helium was traced to a leak in the potted seal of a pressure transducer lead cable. The cable construction is one of multiple insulated conductors contained within a shielded outer covering. Helium gas penetrated the outer sheath and leaked along the lead wires through the potted seal into the refrigerant system. The instrumentation potted seal design was modified and new units fabricated. Subsequent testing confirmed the integrity of the revised cable sealing technique.

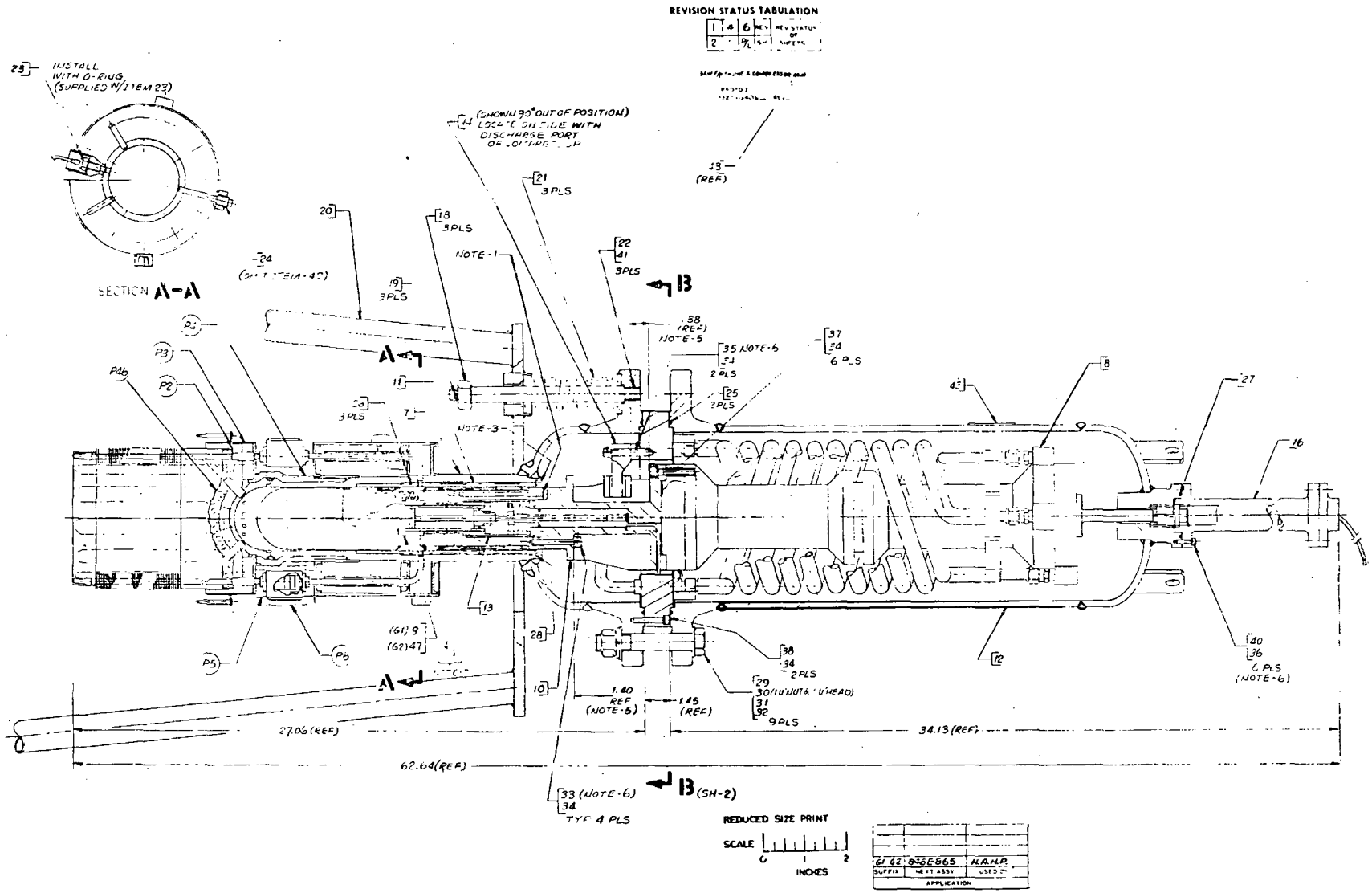

Figure 3-14. Assembly Drawing of FPSE and Compressor

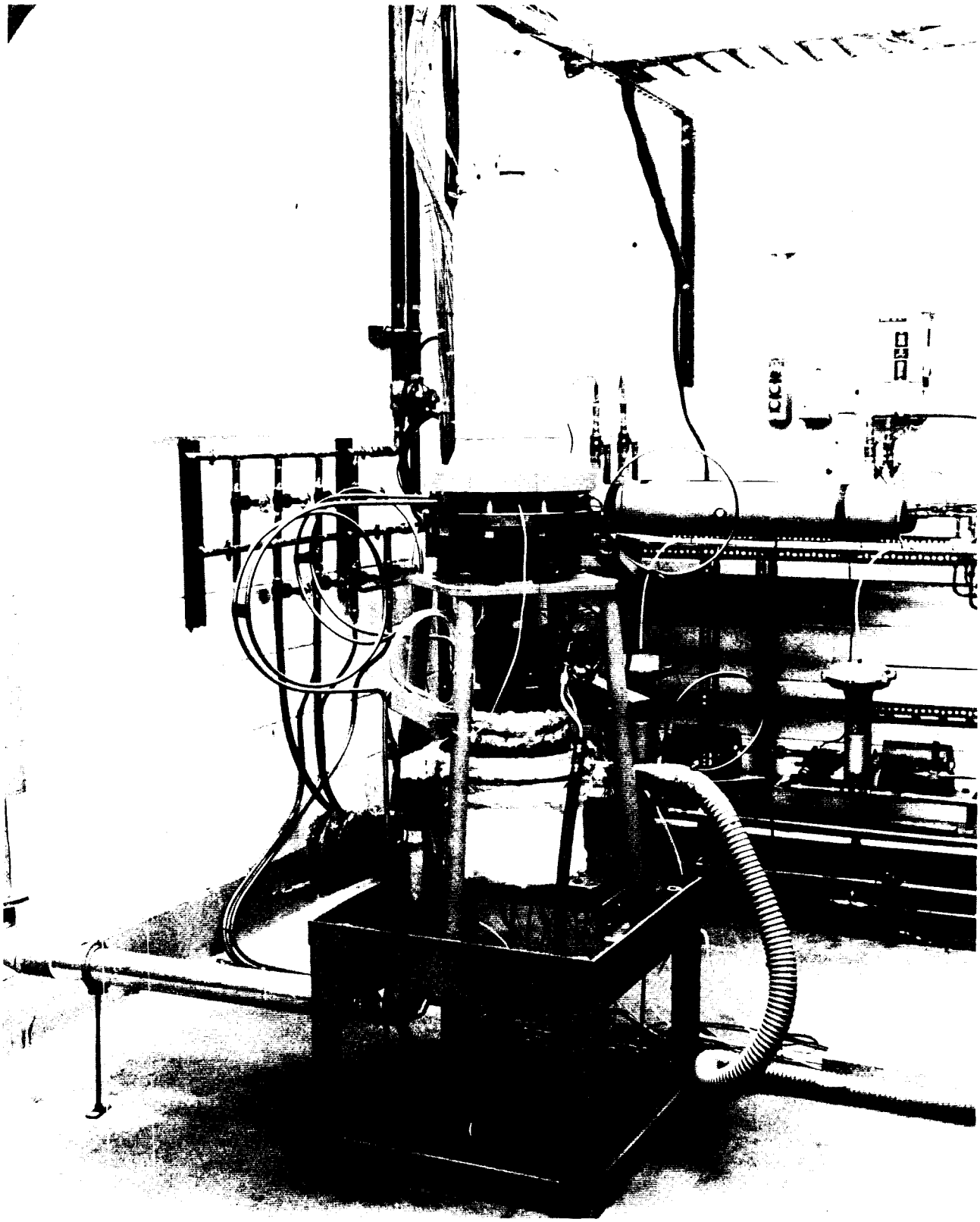

Figure 3-15. Combustor/Engine/Compressor Assembly Mounted in Test Facility

Testing was resumed but later suspended when the compressor free piston assembly locked within the in-line cylinders. Disassembly revealed the piston outer diameter and the bore of the cylinders in the gas spring region were scored. An inadequate oil supply through the gas spring volumes was determined to be the reason for the failure, as described in paragraph 3.4.4. The bores of the cylinders were reworked and the pistons replaced. The gas spring reference volumes were externally connected directly to the refrigerant suction inlet manifold and testing resumed.

Engine operation with the inertia compressor also identified a transient condition at start-up that was not previously experienced. At start-up, the engine immediately supplies energy to the compressor assembly. The compressor responds immediately and begins to pump. However, several seconds are required for the compressor, in combination with the refrigerant load system, to develop a useful pressure ratio and begin to utilize the input power. During this time period, the engine operation is essentially "unloaded." This causes the engine power piston to reciprocate between the limits of the mechanical stops.

To circumvent this transient operating mode, a valve was installed in parallel with the power piston, from engine compression space to the bounce space. As the engine piston motion is initiated, the valve is modulated thus permitting controlled leakage around the piston assembly. This reduces the engine developed pressure and the resulting energy level to the piston assembly. Shorter piston strokes are thus achieved during the transient period before the compressor loads the engine. As the compressor pressure ratio develops, the valve is closed. This technique will be employed during current tests while the transient condition is being investigated.

The integrated test program was also interrupted by a displacer failure. Visual inspection of the dome revealed that the displacer assembly had a concaved appearance rather than the normal hemispherical convex shape. The dome had repeatedly impacted the cylinder head during transients and had numerous dents in the surface. It was found that the displacer vent port had also been plugged, underneath the filter, during the displacer assembly (epoxy had inadvertently plugged the hole). Thus, the combination of impact loading and high pressure

differentials across the dome caused the failure. The assembly procedure has been revised to prevent a similar occurrence. The filter has been removed from the orifice holder to permit visual inspection of the assembly. In addition, the vent port diameter was enlarged to prevent possible plugging by small particles, now that the filter has been removed.

It was also observed during the integrated test program that both the power piston and displacer "centering" mechanisms were marginal, and under some compressor load conditions inadequate. Several investigative test runs, plus an analysis of the centering port configurations, indicated that the port diameters were too small. The analysis also identified larger port sizes that would enhance the centering mechanisms. These modifications were incorporated into the "centering" mechanism of the piston and displacer, and both worked very well. Prior test conditions were repeated and the displacer and piston motions were both centered and stable. Changes in the compressor load produced a comparable change in the engine stroke. The engine piston motion was symmetrical about the centerline, within the limits of the mechanical stops. The displacer to piston relative motion traces showed identical results - dynamically centered operation that appear to be insensitive to changes in load.

3.5.3 ENGINE TUNING PROCEDURES

Engine tuning efforts were completed on the FPSE/compressor configuration as in the FPSE/helium pump testing previously described. This effort involved matching the proper sized displacer/piston gas spring volume with a given displacer rod area to yield the desired displacer/piston relative stroke at the desired phase angle between the two reciprocating components. Three different displacer rod areas were investigated. The engine was successfully started with the two larger diameter rods. However, the engine could not be started with the smallest rod.

Multiple performance tests were conducted with both the largest diameter rod (G1) and the intermediate diameter rod (G3) configurations. Testing was conducted at energy input firing levels of 30 to 60 KBTU/HR. The engine/compressor operation was quite stable and provided repeatable data. The test results confirmed the analytical predictions - improved

engine/compressor performance is obtainable with smaller displacer rod areas (soft gas spring) for a given energy input level. Therefore, the engine was reconfigured for a follow-on series of tests using the smallest displacer diameter rod (G2) configuration.

Attempts to start the G2 configured engine were unsuccessful. It appears that the smallest rod configuration produces an insufficient gas spring pressure gradient to cause the engine to become self-sustaining during the startup transition. A positive starting mechanism may be required for this softest gas spring configuration to achieve engine starting. An analysis will be performed to evaluate such an approach.

The engine was subsequently assembled with the intermediate size diameter rod for the displacer gas spring geometry, and performance testing was continued.

At the end of the reporting period, the unit was nearing completion of integrated testing and was being prepared for installation with the air handlers and controls for the prototype system tests. The system tests are scheduled to start in the next reporting period.

SECTION 4

ADVANCED COMPONENT DEVELOPMENT

SECTION 4

ADVANCED COMPONENT DEVELOPMENT

4.1 INTRODUCTION

Activities in the Advanced Component Development Task, except for the Endurance Test, were completed in this reporting period. The endurance test will commence in the next reporting period.

The objective of the Advanced Component Development Task is to conduct component development efforts in parallel with other Phase II activities in order to accelerate the Prototype HAHP development cycle. Concepts to improve component performance and reliability and to reduce costs are evaluated. Hardware is designed, fabricated, and incorporated into the prototype unit for testing whenever feasible.

Major accomplishments in this reporting period were the initiation of the piston bearing sleeve material wear test, design of an advance displacer gas spring configuration, an electro-magnetic engine starter, a magnetic drive concept for engine/compressor coupling and advanced combustor development. Matching analyses of the engine/compressor assembly were also undertaken to improve the matching characteristics of the Prototype I system.

4.2 ADVANCED ENGINE COMPONENTS

4.2.1 IMPROVED DISPLACER GAS-SPRING DESIGN

In order to improve the HAHP configuration, efforts have been taken to reduce the bulk of the outdoor unit. One main thrust is to reduce the overall length of the Free Piston Stirling Engine (FPSE).

The length of the engine power piston in the Prototype I design was dictated by the volume requirement of the displacer gas spring. In Proto I the displacer gas spring is located inside the power piston body, as illustrated in Figure 4-1 (a). An alternate arrangement design which will locate the displacer gas spring inside the displacer body is shown in

Figure 4-1 (b). The relocation of the displacer gas spring will not affect the dynamics of the displacer, but will allow a significant reduction of the engine power piston length. In the next reporting period, the concept will be further evaluated for possible use in the Prototype II unit.

4.2.2 ENGINE SELF-STARTING MECHANISM DESIGN

It has been demonstrated that FPSE of less than 100 Watt output has a self-starting capability. However, as the engine power level approaches or exceeds 1KW, such as in the Proto I HAHP Stirling engine, the ability to self-start appears to diminish. To assure reliable start-up of the engine in a typical installation, a positive starting mechanism for the FPSE will be needed.

The start-up of the Proto I engine has been accomplished by a series of pressure pulses in the engine working space, generated by a specially designed high pressure helium gas circuit. A detailed description of this starting technique was given in the last semi-annual report. The pressure pulses are synchronized with the engine operating frequency and the engine piston and displacer in the cylinder. This shuttles the working fluid between the hot expansion space and the cold compression space. Due to the cyclic variation of the working fluid temperature, motions of the moving masses are amplified and become self-sustaining. Normally three or more cycles of pulsating motion can successfully start the engine. Figure 4-2 shows typical traces of start-up test data. The technique employed, though effective, does require a reserved helium bottle for generating the pressure pulse. In practice, a simpler, reliable and effective starting mechanism will be required.

Test data such as that shown in Figure 4-2 have been analyzed, indicating that the engine starts when the following conditions are satisfied:

- Displacer oscillates with at least 0.25 to 0.50 inch amplitude
- Displacer leads the piston motion
- Start-up oscillation lasts at least three cycles.

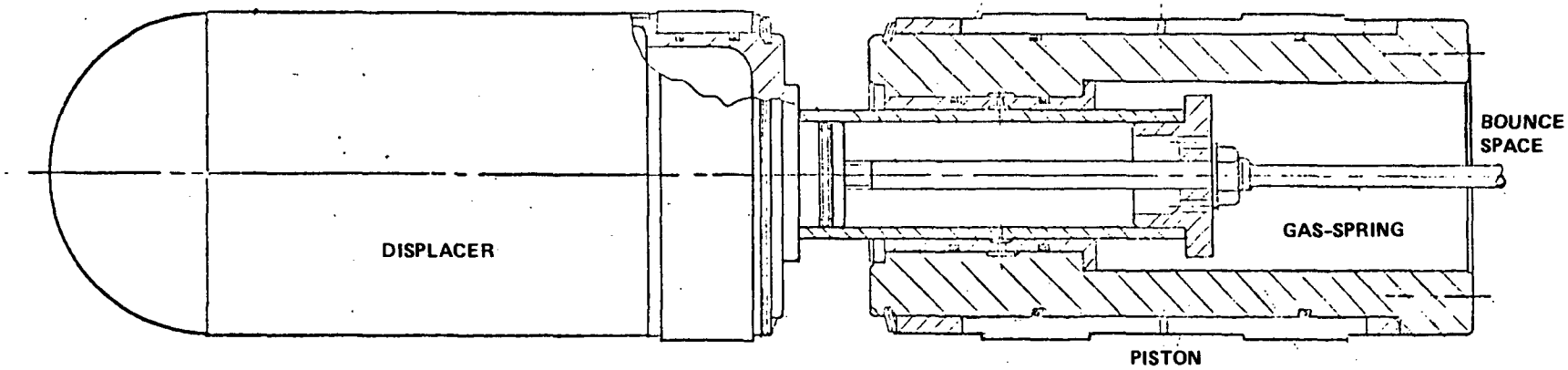

(A) GAS SPRING IN THE POWER PISTON

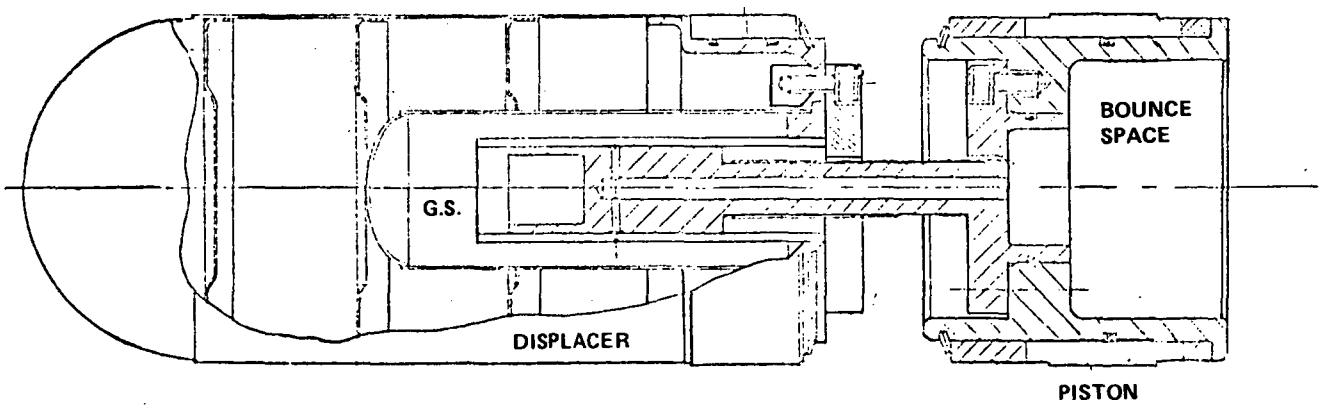

(B) GAS SPRING IN THE DISPLACER

Figure 4-1. Alternate Displacer Gas Spring Configurations

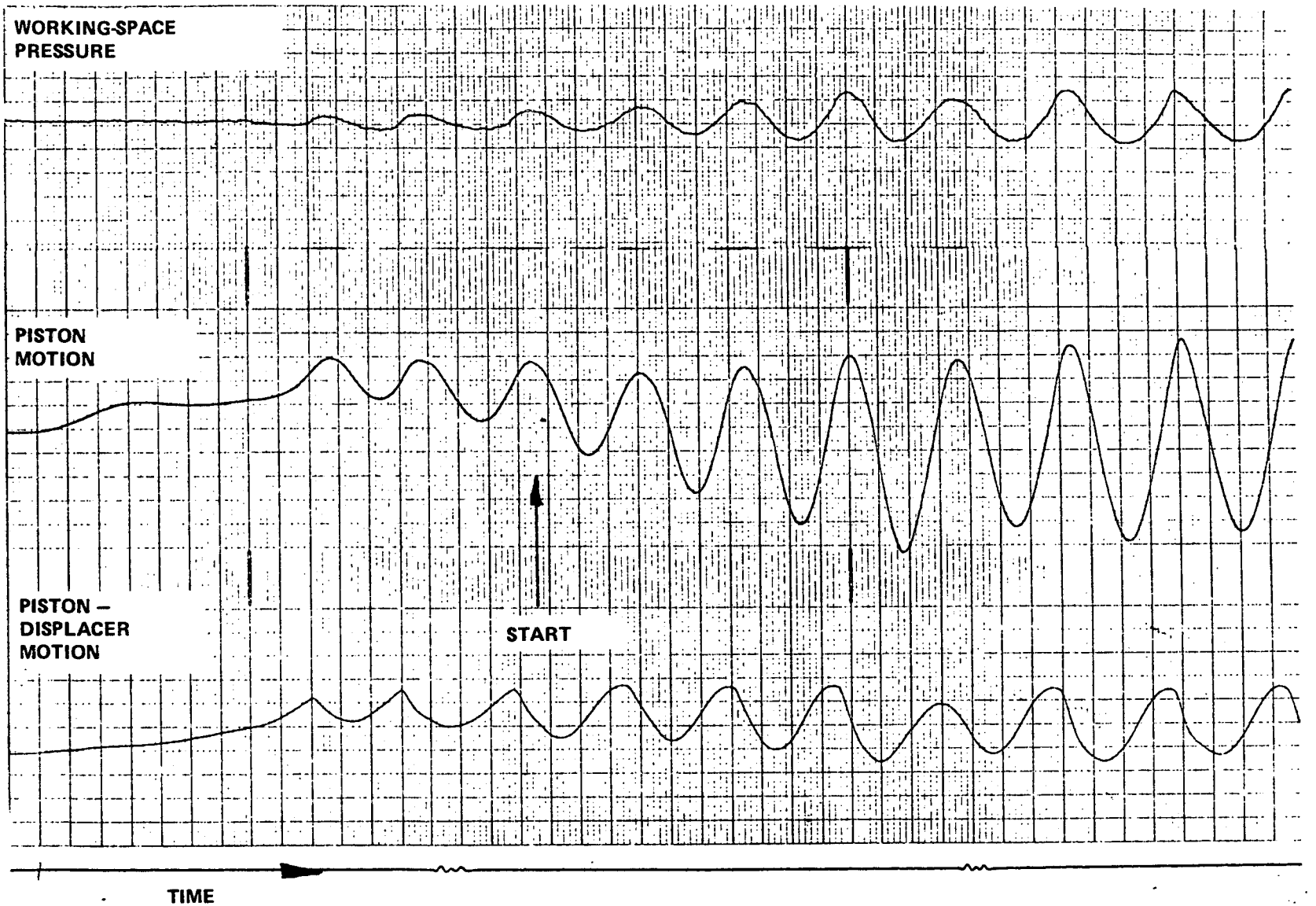

Figure 4-2. Typical Motions of Engine Piston and Displacer and Working Space Pressure During Start-Up

Various alternate starting mechanisms to provide these conditions have been evaluated. One of the most attractive approaches is an electromagnetic device located at the interface between the power piston and the displacer. Figure 4-3 shows a conceptual layout of this approach. The electromagnetic device acts like an electric solenoid and generates oscillating motion of the displacer at a resonant frequency of the engine displacer assembly. This generates a pressure variation in the working space and results in engine start-up.

In order to prove the concept before its implementation in the Prototype II engine, a test model will be built and retrofitted into the Prototype I for testing in the next reporting period.

4.3 MAGNETIC DRIVE CONCEPT

The Prototype 1 Stirling engine power piston drives the compressor housing directly. This arrangement requires that the freon compressor be located inside the engine pressure vessel. Due to the required design arrangement, penalties are incurred in serviceability, over-all length, reliability of the tubular spring coils for freon delivery, and heat transfer between helium and freon. Improvements in the above areas from the Prototype 1 concept can lead to a more efficient and attractive eventual product.

A preliminary study was carried out to identify and evaluate alternate concepts for the connecting drive between the engine and the compressor. One concept evolved from this effort is a magnetic coupling serving as the engine/compressor drive system.

Figure 4-4 depicts a conceptual arrangement of a magnetic drive, compared to the Prototype 1 direct-drive concept. In this concept, the engine power piston is connected to the driving pole piece of a magnetic drive. The compressor piston is connected to the driven pole piece which is separated from the driving part with a thin wall pressure vessel.

The magnetic drive concept offers many advantages over the current direct drive. Table 4-1 summarizes a preliminary assessment of the various drive concepts. It can be seen that the magnetic drive concept offers better serviceability and less heat transfer between the helium and freon fluids, and offers the potential of a more compact unit.

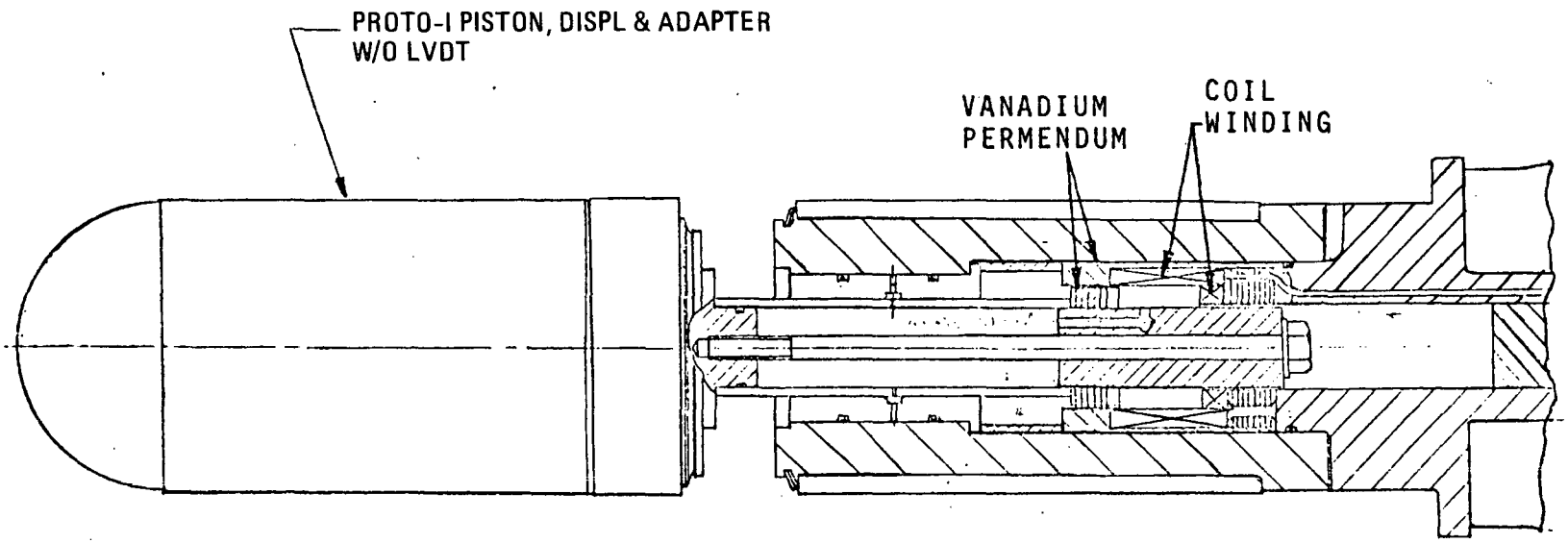

Figure 4-3. FPSE Electromagnetic Starter

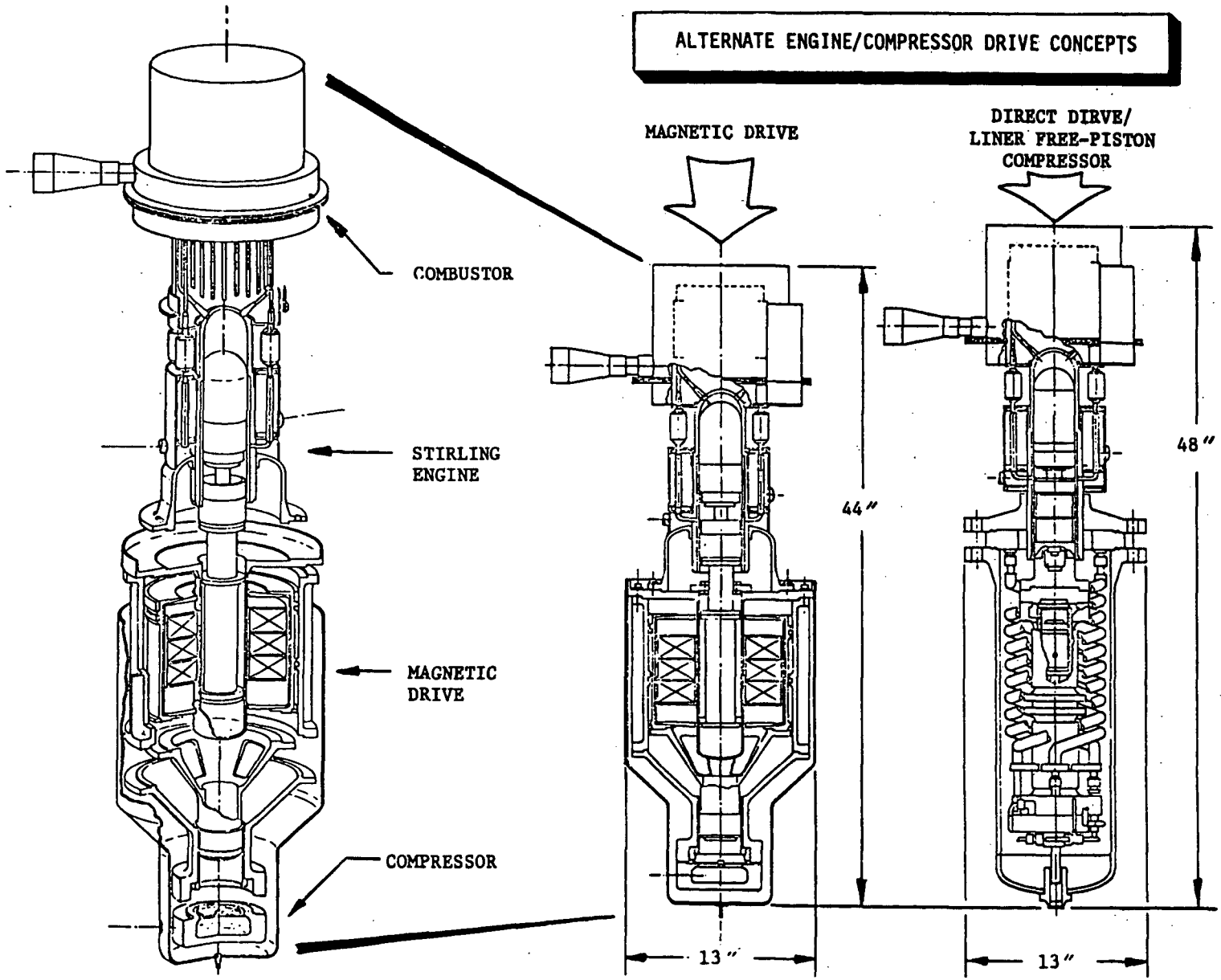

Figure 4-4. Alternate Engine/Compressor Drive Concepts

Table 4-1. Preliminary Evaluation of Alternate Engine/Compressor Drive Concepts

	FPSE/FPLC (Present)	Magnetic Drive	
		Electromagnetic	Permanent-Magnet
Compressor	Free Piston Linear	Several Alternatives	
Engine Size	Large: -Heavy Pressure Vessel -Heavy Piston	Small: -Light Pressure Vessel -Light Piston	Medium -Light Pressure Vessel -Heavy Piston
Over-All Length	48 In.	44 In.	48 In.
Drive Eff.	100%	Need Parasitic Power (150 Watts)	Eddy Current Loss
Heat Transfer to Freon	450 Watts	180 Watts	30 Watts
Service	Restricted	Better Access	
Reliability	Dictated by Life of Freon Coils and Joints	Dictated by Drive Bearing Load	
Starter	Additional	Integrated	Additional

In view of the advantages mentioned above, a proposal to develop a magnetic drive for the HAHP is being prepared.

4.4 MATERIALS DEVELOPMENT TESTING

A bearing material accelerated wear test was initiated to evaluate the wear characteristics of of a select group of materials operating under conditions simulating those encountered in a FPSE. The engine bearing requirements are for linear reciprocating self-lubricated bearings for both the power piston and displacer components.

The bearing operating environment consists of an oil-free high pressure (80 bar) dry helium atmosphere, at temperatures up to 300°F, with power piston and displacer reciprocating stroke requirements of 1.7 and 2.5 inches peak to peak, respectively, at approximately 30 Hz.

The wear test program will be conducted at the General Electric Material and Processing Laboratory, Schenectady, NY. The test machine to be used is a Falex Bearing Test Machine, Model No. 5, capable of testing two bearing specimens simultaneously, with a dry helium environment at an ambient temperature of 250°F. A photograph of the Falex Machine is presented in Figure 4-5. The standard test specimen configurations compatible with this machine consist of a 3/4 inch OD shaft (reciprocating or rotating capability) running against a stationary bushing having a 3/4 inch ID and 3/4 inch length.

The test specimens to be evaluated are as follows:

a) Reciprocating Specimen - A chrome plated 4340 steel shaft, both 8 and 16 RMS surface finish. (This material combination is the same as that of the engine cylinder against which the bearing sleeves ride.)

b) Stationary Specimen - The stationary specimens include:

   1) Carbon Graphite, PSN (Pure Carbon)*

   2) Fluon, VP-25 (Polyflon Corp.)

*Baseline material for establishing relative wear rates.

Figure 4-5. Engine Bearing and Seal Materials - Friction and Wear Test Machine

3) PTFE, K-30C (Koppers Corp.)

4) Envex, 1228 (Rogers Corp.)

5) Vespel, SP-21 (DuPont Corp.)

6) SiC (Coor's)

7) AD-90 (Coor's)

8) MACOR Ceramic (Corning)

9) Vistal (Coor's)

The planned tests are to subject one each of the above listed stationary specimens to a 24 hour test while running against a reciprocating shaft with an 8 RMS finish. In addition, one

each of the P5N and K-30C specimen will be similarly tested with a 16 RMS shaft. The test conditions for these tests will be:

- Average unit face pressure = 2 psi $\pm$ 10%
- Oscillating drive arc = $40^{o} \pm 2^{o}$
- Oscillating speed = 700 CPM $\pm$ 5%
- Test chamber environment = dry helium (Dew Pt. $\leqslant -70^{o}F$)
- Ambient temperature = $250^{o}F \pm 10^{o}F$
- Duration of test = 1×10^{6} cycles minimum, or until failure

Test data will include static and dynamic friction, unit load, ambient temperature, specimen weight loss, wear rate, and visual observations of the wear surfaces of both specimens.

Extended-life wear tests are planned for the two most promising bearing materials identified in the above test program. Further details on the test plan are presented in Appendix B.

Fabrication of the wear test specimens was nearly completed at the end of this reporting period, with the test program planned to start in July 1978. Completion is planned within a two month period.

4.5 ADVANCED COMBUSTOR DEVELOPMENT

4.5.1 ADVANCED COMBUSTOR

The purpose of the advanced combustor development effort is to evaluate design improvements for the Proto II combustor as well as build a data base from which Proto II performance can be projected.

During this reporting period the detail design of the advanced combustor was completed. The overall design is shown in Figure 4-6. Compared to the Prototype 1 combustor, the advanced combustor design incorporates radial inlet and exit ducts, and includes a directional vane and flow barrier in the inlet manifold. The exhaust manifold area was also

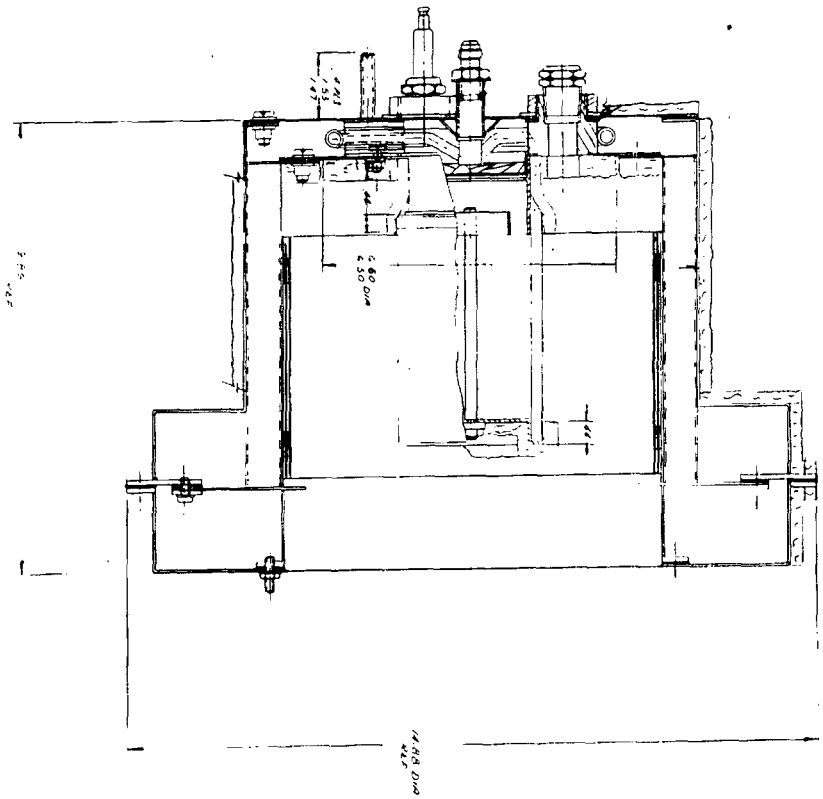

Figure 4-6. Advanced Combustor Design

increased over the Proto I design. These changes were incorporated in order to improve the flow distribution through the preheater. The burner support was also redesigned to eliminate loss of burner element preload. Lack of preloading caused flashback conditions in the Proto I design. The gas diffuser configuration was also modified to enhance mixing of the fuel and inlet air.

Fabrication of all piece parts for the advanced combustor was completed and assembly of the unit was initiated in this period. The flow distribution through the preheater was measured prior to final assembly of the combustor. The hardware configuration consisted of the preheater assembly, the housing assembly, the exhaust manifold and the required fastener hardware. Air flow was measured using a hot wire anemometer at the exit of the low temperature side of the preheater and the inlet of the high temperature side. Flow measurements were taken at 12 locations around the perimeter of the preheater. The flow

distribution for the configuration, as initially fabricated, is shown in Table 4-2. This configuration did not include the flow barrier located 180° from the inlet directional vane.

To better balance the flow distribution, changes were made to the directional angle of the inlet vane and a barrier was added at a location 180° from the inlet. The measured flow distribution for the modified configuration is also shown in Table 4-2. The modified configuration is shown in Figure 4-7. The high flow measured at point 4 was due to a seam in the preheater which caused a reduced area flow passage. The flow distribution was also measured on the exhaust side (same measurement points) while the air blower was drawing through the outlet of the combustor. The flow distribution was well balanced as shown in Table 4-2. The data indicates that the design changes described above provided a more uniform flow distribution through the preheater than realized with the Proto I combustors.

During the next reporting period the assembly of the combustor will be completed and a total performance evaluation will be made.

Table 4-2. Flow Velocity Distribution at 16 CFM

	Velocity (FPM)		
Measurement Pt	As Built (Inlet)	Final Modification (Inlet)	Exhaust Side
1	130	100	140
2	95	130	140
3	85	140	145
4	100	210	160
5	135	165	155
6	110	140	140
7	145	150	140
8	170	170	145
9	180	150	140
10	200	140	140
11	210	140	135
12	180	140	140

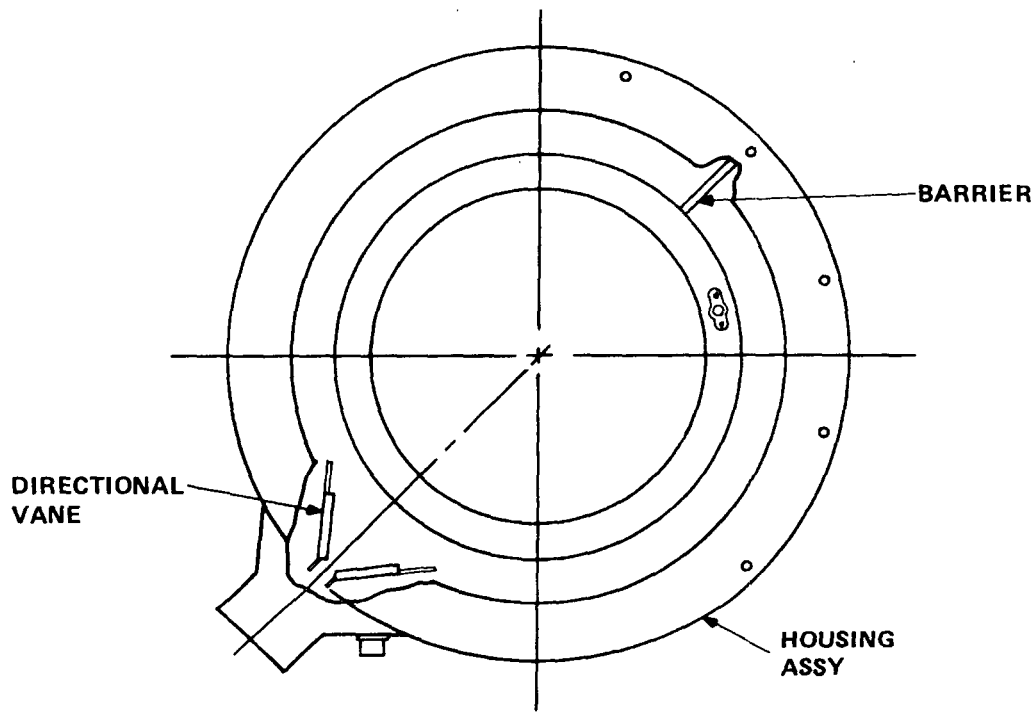

Figure 4-7. Advanced Combustor - Inlet Housing

4.5.2 HEATER HEAD FIN ANALYSIS

An analytical study was made of the Stirling engine heater head fin design. The results of the analysis suggested a modification to the present fin design which would reduce the fin leading edge temperature during normal operation. The results of the analysis are presented below.

The bulk of the heat transfer between the combustor gas and the fin is through the relatively narrow strip near the fin leading edge. The current fin design is shown in Figure 4-8. Analysis indicates that at least 95% of the energy transferred is deposited within 0.18 inch of the fin leading edge. If the outer surface of the helium tube is at a distance greater than 0.18 inch from the leading edge, then the energy must be conducted through some length of fin to reach the tube surface. Therefore, minimizing the length of conduction path will minimize the fin leading edge temperature.

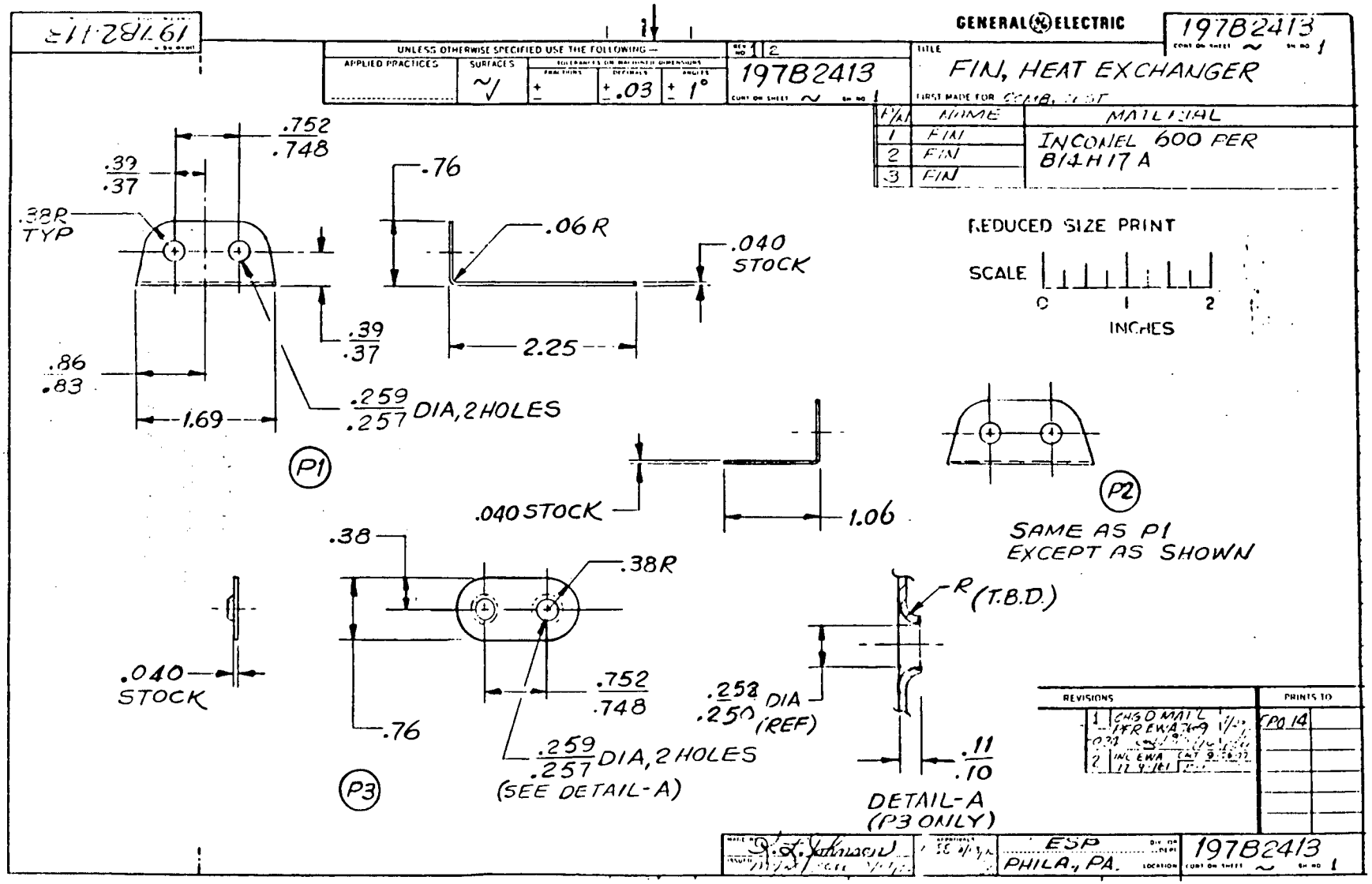

Figure 4-8. Proto I Heater Head Fin Design

Increasing fin thickness will also reduce fin leading edge temperature. Analysis indicated that to reduce leading edge temperature by 50°F, the fin thickness would have to be increased from 0.04 to 0.08 inch. This change results in an increase in total fin weight about 40%. This weight penalty was judged to be too severe for the temperature savings realized.

While the original fin thickness was retained, two design changes were made to reduce the conduction path from fin edge to tube surface. The first change was to contour the fin edge as shown in Figure 4-9. This contour tends to maintain a constant conduction path length between any point along the leading edge and the helium tubes. The second change was to reduce the dimension between the centerline of the tube through hole and the fin leading edge to 0.3 inch. Further reduction in this dimension would significantly increase tooling and fabrication costs. Analyses indicate that these design changes will reduce the fin leading edge temperature by ~100°F. The design change has been implemented and testing will be performed during the next reporting period to verify the analytical predictions. If performance predictions are verified, this improved design will be incorporated into the Prototype 2 design.

4.5.3 CERAMIC BURNER DEVELOPMENT

The development of a low cost ceramic transpiration burner element for the HAHP combustor continued during this period. The current burner element is a hollow cylinder 2.6 inches in diameter, 5 inches long, with a nominal wall thickness of 0.125 to 0.25 inch. The Proto I combustor uses an element of Hoskins 875 wire which has been chopped, pressed and sintered into a flat feltmetal sheet (See Figure 4-10(a)). The sheet is rolled and then spot welded along an overlapping seam. Inprovements in performance and lower costs are seen for ceramic elements, and development of this technology began in the last reporting period.

Several ceramic burner elements, using various materials, were fabricated and tested during this reporting period. These are shown in Figure 4-10(a) through (h). One ceramic burner element was fabricated using 0.035 inch diameter spherical particles which were pressed into a mold and then sintered together (Figure 4-10(b)). The ceramic material, Lithium Aluminum Silicate and Magnesium Aluminum Silicate (LAS-MAS, tradenamed GE-3200) has excellent resistance to thermal shock, resistance to sulfur corrosion and can be

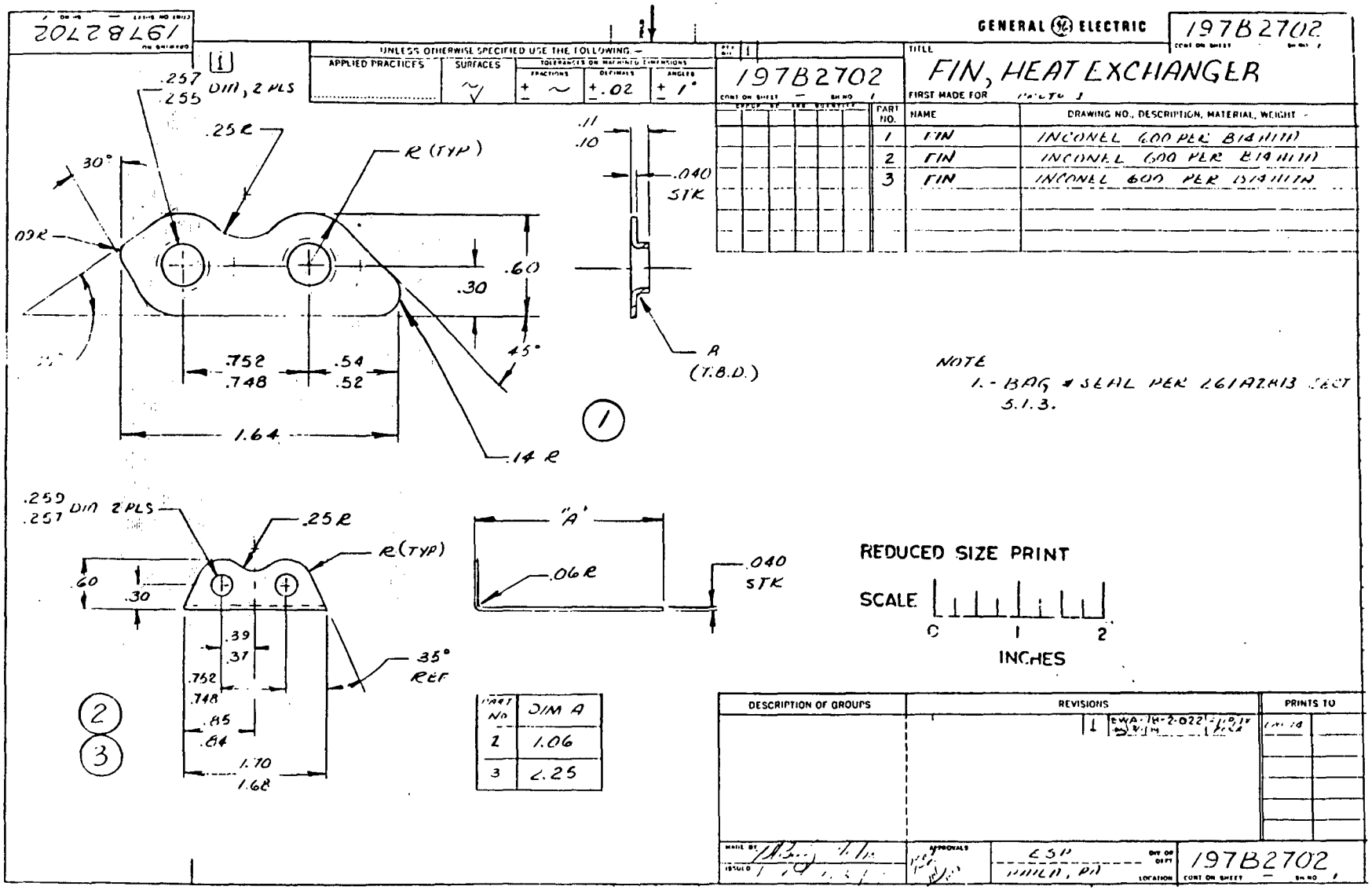

Figure 4-9. Advanced Heater Head Fin Design

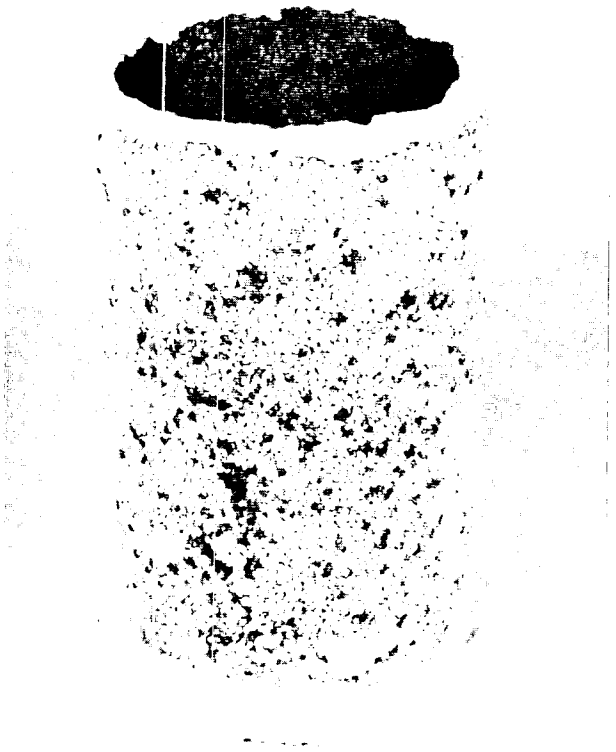

(A) PROTO I FELTMETAL BURNER (HOSKINS 875)

(B) SPHERICAL PARTICLE CERAMIC BURNER (LAS-MAS)

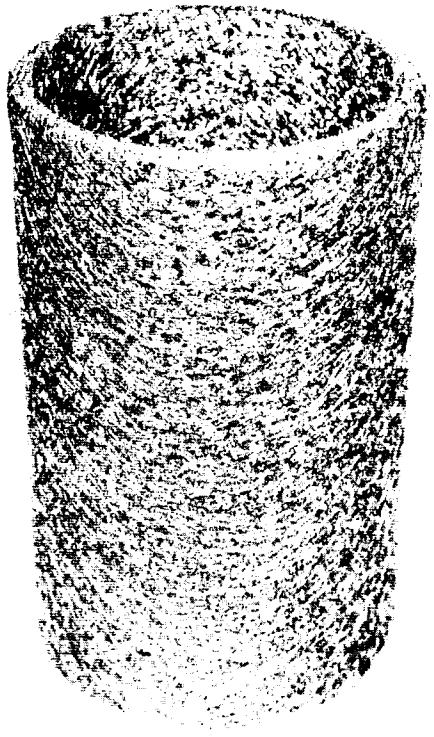

Figure 4-10. Various Types of Burner Frits

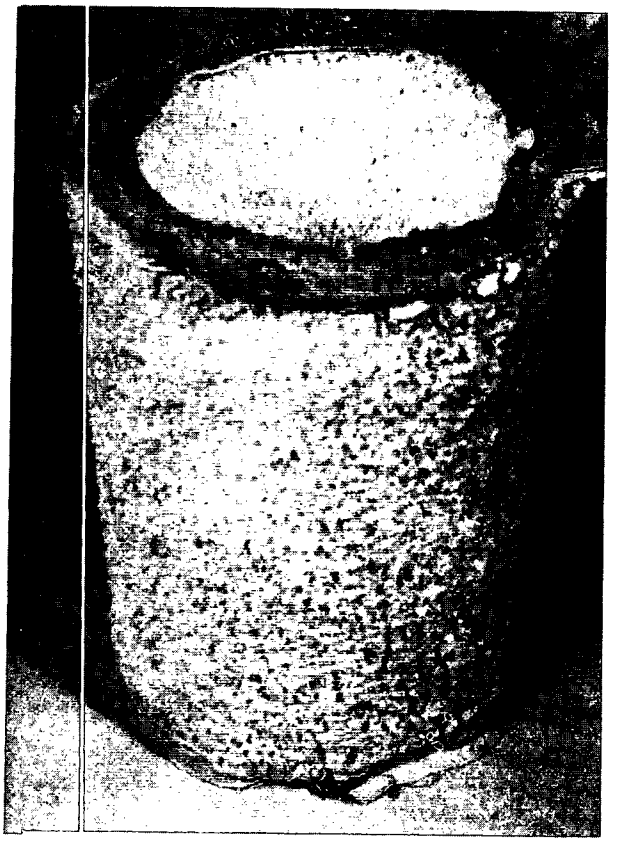

(C) FOAM CERAMIC BURNER (LAS-MAS)

(D) SINTERED LOOSE WEAVE CLOTH CERAMIC BURNER (ALUMINA)

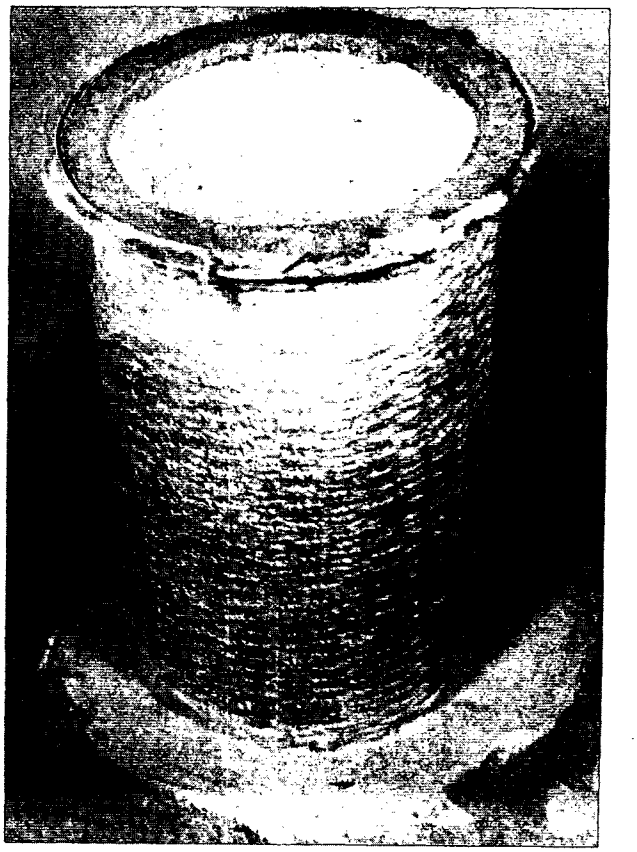

Figure 4-10. Various Types of Burner Frits (Continued)

(E) SINTERED LAYERED LOOSE AND FINE WEAVE CLOTH CERAMIC BURNER (ALUMINA)

(F) SINTERED LOOSE WEAVE WITH ONE LAYER FINE WEAVE CLOTH CERAMIC BURNER (ALUMINA)

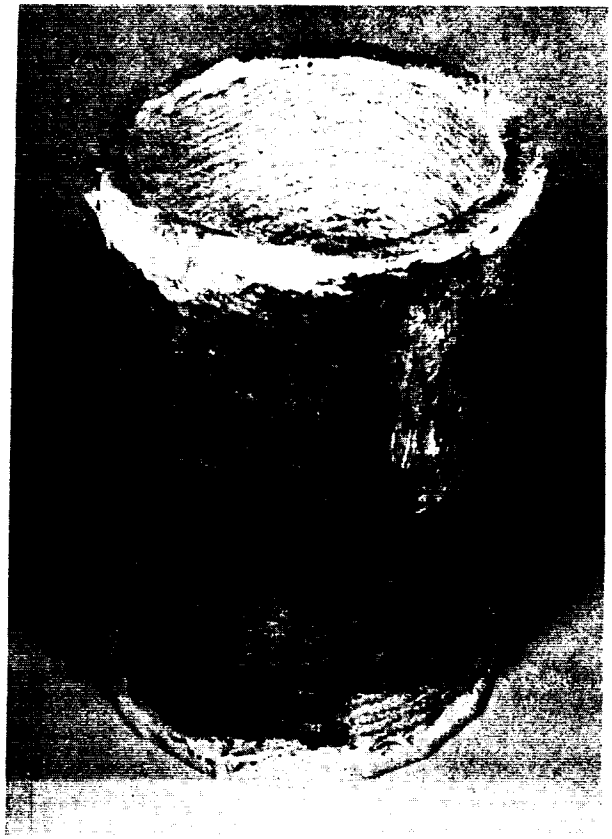

Figure 4-10. Various Types of Burner Frits (Continued)

operated to 1200°C. The element performed well in tests with an air preheat temperature of 800°F but exhibited a pressure drop equal to twice that of the feltmetal. Fabrication problems were encountered on these elements. The element had poor structural integrity due to poor sintering of the spheres, non-uniform porosity and cracking due to shrinkage when sintering in the mold.

Several modifications to the fabrication technique were unsuccessfully employed to alleviate these problems. The burner element was hydrostatically pressed in addition to the vibration packing to enhance the surface contact between spherical particles. A filler material was also added (Carbo-Wax) to produce a free standing element which could be sintered without the carbon mold. However, these techniques and variations thereof were unsuccessful in producing an improved ceramic burner.

Further investigation led to several alternative fabrication methods. A "foam" burner was produced by the sintering of a ceramic slurry coated polyurethane foam (Figure 4-10(c)). The process was difficult to control and resulted in significant variations in porosity due to localized saturation of the foam by the ceramic. However, the element was tested with encouraging results. The foam was much more porous than the spherical particle construction; in fact, pressure drop was so low that flashback occurred. The structural integrity of the foam was, however, much improved. It is expected that various porosities can be attained with more sophisticated fabrication techniques. Manufacturers of foamed ceramics will be contacted during the next reporting period to survey suitable alternative materials.

Burner elements were also fabricated by rolling various types of woven alumina ceramic cloths into a hollow cylinder and then sintering. Three configurations were fabricated and tested: (1) a large thread size, loose weave cloth approximately 0.25 inch thick; (2) a layered, loose weave and fine weave cloth combination; and (3) a larger thread, loose weave covered by one layer of a fine weave cloth. These burner frits are shown in Figure 4-10(d), (e), and (f). The pressure drops for these type constructions were also lower than that of the feltmetal burner but porosity was reasonably well controlled. Delamination of the layers of the cloth was a problem, especially with the mixed cloth elements. Procurement of alternate

cloths and possibly re-orienting the weave direction of each layer might alleviate this problem and is being examined.

Results of this effort indicates that future development should concentrate on the foam and cloth-layered type of burner, since they appear to offer significant advantages in structural integrity, porosity control and ease of fabrication. Development of an advanced ceramic frit element is being proposed as part of a ceramic combustor development task.

APPENDIX A

TEST PLAN SUMMARY FOR FREE PISTON STIRLING ENGINE (FPSE)/INERTIA COMPRESSOR

APPENDIX A

TEST PLAN SUMMARY FOR FREE PISTON STIRLING ENGINE (FPSE)/INERTIA COMPRESSOR

1.0 INTRODUCTION

This test plan is intended to be a flexible guide in evaluating the operational and performance characteristics of the FPSE/inertia compressor.

2.0 PURPOSE

The purpose of testing is to evaluate the following:

- Proof of design concept.
- Understanding of engine and compressor operation in the three-mass system.
- Optimization of engine gas springs and related mass characteristics.
- Performance evaluation of FPSE configuration.
- Performance evaluation of inertia compressor configuration.
- Identification of design deficiencies and corrections.

3.0 EQUIPMENT TO BE TESTED

Performance testing of the FPSE/inertia compressor integrated assembly will be performed on the configuration described in GE Drawing 132D6340. A Proto I combustor unit will be combined with the engine as previously utilized as part of the FPSE component testing. The FPSE will be charged with high pressure helium gas ranging from a low test point setting of 580 psia to a high test point setting of 1170 psia.

4.0 TEST FACILITY

The test facility, diagnostic instrumentation, and control systems have been designed, assembled and checked out. Each facet of the total system has been broken down into discrete subsystems. These subsystems are:

- Console Assembly
- Temperature Monitor Panel
- Natural Gas Supply System
- Combustion Air System

- Stirling Engine Controls
- Meter Relay Panel
- Gauge and Meter Panel
- Glycol Pumping Loop
- Helium Supply Loop
- R22 Refrigerant Loop
- Controls
- Instrumentation

5.0 SAFETY

The safety of the individuals operating and/or working near the test facility is of paramount importance. Their safety must come first. Proper care and technique in handling the various components must be followed to obtain valid test data. In both cases, good judgement must be exercised. In general, if you do no know what to do, ask the component design engineer or test supervisor before proceeding.

The following are some general safety guidelines.

(1) Wear safety glasses at all times.

(2) Coordinate all activities through the testing supervisor.

(3) Do not open any valves until appropriate pressure gauges have been checked for existing environmental conditions.

(4) Do not attempt to open any portion of helium system until entire system is at ambient pressure conditions.

(5) Do not attempt to run engine if safety circuits are not operable.

(6) Keep helium gas bottles chained at all times.

(7) Keep transient personnel limited to two (2) persons and have them check in with test supervisor.

(8) Assume all combustor parts are hot and respect same accordingly.

(9) Do not allow any smoking in test facility.

(10) Vent all refrigerant (R22) out of doors when venting down system.

(11) All pressure relief valves must be vented downward towards floor.

(12) All electrical components must be properly grounded.

(13) Inspect natural gas system for leaks on a periodic basis.

(14) Do not attempt to reignite burner if frit ID temperature is greater than 1200°F.

(15) Make certain combustion products are exhausted out of doors through vent system. Purge combustor system with air before attempting to ignite burner.

6.0 TEST PREPARATION

6.1 ASSEMBLY

- The test hardware shall be assembled per GE Drawing 132D6340.
- All instrumentation shall be installed per design engineering instructions.
- An assembly build record shall be kept by both assembly and engineering personnel.

6.2 FACILITY INTEGRATION

- The unit shall be delivered to the test facility and mounted in the test cell.
- All interconnecting piping shall be connected and checked for proper location and the integrity of all joints.
- The engine is to be placed under a vacuum for 15 to 20 minutes and then valved off. Check for leaks and for loss of vacuum level.

  NOTE: RATE OF EVACUATION MUST BE LESS THAN 2 PSI PER SECOND AND VACUUM PUMP MUST BE CONNECTED TO THE BOUNCE SPACE VOLUME. DO NOT OPEN ENGINE COMPRESSION SPACE VALVE UNTIL THE DESIRED EVACUATION LEVEL HAS BEEN OBTAINED.

7.0 TEST PLAN

The engine will be energized by setting a predetermined firing rate (energy release rate) on compressor has begun to pump refrigerant, the mass flow rate will be adjusted by either a manual valve or a thermal expansion valve. The pressure ratio across the compressor will be adjusted by establishing the desired temperature levels of both the condenser and evaporator

in conjunction with the throttle valve position. Data will be taken to determine the resulting performance characteristics at the various engine charge pressures, combustion firing levels, compressor pressure ratios and flow rate levels. The test matrix is delineated in Table A-1.

8.0 TEST RECORDS

Test records will be maintained at all times. These will take the form of either entries in the Engine Log Book and/or recorded test data on the specially-created forms. The log book will stay with the engine. The responsible test supervisor and/or test engineer will enter all pertinent data and observations and sign and date the entries. Master copies of all data sheets will be maintained by the Manager, Heat Engines Engineering. Copies of these data will be available to all personnel, however, the master copies will stay in the files.

TABLE A-1. OPERATING TEST POINT DEFINITION

TEST PT. NO +	2YYZW	2YYZW	2YYZW	4YYZW	4YYZW	4YYZW	6YYZW	6YYZW	6YYZW
Firing Rate $\frac{BTU}{HR}$	20,413			41,392			62,372		
Fuel Flow (SCFM)	0.36			0.73			1.1		
Air Flow (SCFM) % Excess ¢	3.46, 0	3.98, 15	4.50 30	7.05, 0	8.11, 15	9.17 30	10.63, 0	12.23, 15	13.82 30
Helium Charge * Pressure (psig) ¢	1. = 580 2. = 870 3. = 1170			1. = —— 2. = 870 3. = 1170			1. = —— 2. = —— 3. = 1170		
Coolant Flowrate (gpm) ¢	1.75			1.75			1.75		
Condenser R22 Disch. Temp/Press Cooling Mode Heating Mode	$C = \frac{108 \pm 2^oF}{296 \pm 3 \text{ psig}}$ $H = \frac{103 \pm 2^oF}{229 \pm 3 \text{ psig}}$			$C = \frac{108 \pm 2^oF}{296 \pm 3 \text{ psig}}$ $H = \frac{103 \pm 2^oF}{229 \pm 3 \text{ psig}}$			$C = \frac{108 \pm 2^oF}{296 \pm 3 \text{ psig}}$ $H = \frac{103 \pm 2^oF}{229 \pm 3 \text{ psig}}$		
Evaporator R22 Disch. Temp. Cooling Mode Heating Mode	$C = 47 \pm 2^oF$ (4^oSH) $H = 26 \pm 2^oF$ (4^oSH)			$C = 47 \pm 2^oF$ (4^oSH) $H = 26 \pm 2^oF$ (4^oSH)			$C = 47 \pm 2^oF$ (4^oSH) $H = 26 \pm 2^oF$ (4^oSH)		

* 1 Bar = 14.5 psi

40 Bar = 580 psig
60 Bar = 870 psig
80 Bar = 1160 psig

\+ Test Point No. Ident. = XYYZW
X = Firing Rate in 10 BTU/HR
YY = Excess Air in 100 x % of Excess Air
Z = 1, 2 or 3 for Helium Charge Pressure Level
W = C for Cooling & H for Heating Modes

¢ Allowance ± 3%

APPENDIX B

TEST PLAN FOR WEAR LIFE TESTING OF BEARING/ SEAL MATERIALS

APPENDIX B

TEST PLAN FOR WEAR LIFE TESTING OF BEARING/ SEAL MATERIALS

1.0 INTRODUCTION

This plan provides a summary of the detailed Wear Life Test Plan for testing bearing and seal materials for use in a Free Piston Stirling Engine (FPSE).

2.0 PURPOSE

The purpose of this test is as follows:

- Conduct wear rate tests on a selective group of bearing materials to establish their properties as a function of unit pressure loading, environment, and surface finish.
- Conduct extended wear life tests on the two most promising materials identified in the above screening tests.

3.0 TEST FACILITY

The wear test program will be conducted at the GE Materials and Processing Laboratory, Schenectady, New York. The test machine to be used is a Falex Bearing Test Machine, Model No. 5, capable of testing two (2) bearing materials simultaneously.

4.0 TEST MATERIALS

The standard test specimen configuration compatible with the Falex Model No. 5 Machine shall be utilized during the test. All test specimens will be supplied by GE-AEP, King of Prussia, Pennsylvania. The reciprocating and stationary test specimens shall be as follows:

- Reciprocating Specimen

  The reciprocating specimen (a 3/4 inch OD test shaft) shall be chrome plated 4340 steel per Drawing 221B3087. Two surface finishes shall be evaluated, P1 having a 16 RMS finish, and P2 having an 8 RMS finish. (This material combination is the same as that of the engine cylinder against which the bearing sleeves ride).

- Stationary Specimen

The stationary specimens (3/4 inch ID x 3/4 inch long bushings) will be per Drawing 295A8104, the material samples being:

P1 - Carbon Graphite, P5N (Pure Carbon)

P2 - Carbon Graphite, G2980 (Wickes)

P3 - Fluon, VP-25 (Polyflon Corporation)

P4 - Envex, 1228 (Rogers Corporation)

P5 - K-30C, PTFE (Koppers Corporation)

P6 - Vespel, SP-21 (DuPont Corporation)

P7 - SiC (Coors)

P8 - AD-90 (Coors)

P9 - MACOR Machinable Glass Ceramic (Corning)

P10 - Lucalox - A5D9 (General Electric)

5.0 TEST PROCEDURE

- Screening Tests

Wear tests shall be completed on one each of the material specimens listed above while running against a reciprocating shaft per P/N 221B3087P2 (8 RMS finish). It is noted that two separate tests can be conducted per shaft. In addition, one each of the specimens per P/N 295A8104P5 (K-30C, PTFE) and 295A8104P1 (Carbon Graphite, P5N) shall be tested while running against a reciprocating shaft per P/N 221B3087P1 (16 RMS finish). Test conditions shall be:

a) P = average unit pressure = 2 PSI $\pm$ 10%

b) Oscillating drive arc = $40^{\circ} \pm 2^{\circ}$

c) Oscillating speed = 700 CPM $\pm$ 5%

d) Test chamber environment = dry helium (Dew Point $\leq -70^{\circ}F$)

e) Ambient temperature = $250^{\circ}F \pm 10^{\circ}F$

f) Duration of test = 24 hours continuous (1×10^6 cycles minimum) or until failure.

Test data shall include static and dynamic friction, unit load, ambient temperature specimen weight loss, wear rate, and a visual observation of wear surfaces of both reciprocating and stationary specimens after test. If the shaft surface is damaged or altered during testing, it shall be refurbished to provide a consistent reference prior to subsequent testing.

- Extended Life Wear Tests

  The two (2) test specimens exhibiting the best wear-life characteristics, per the previous paragraph of tests, shall be subjected to an additional 14 day continuous wear/life test. Test conditions will be the same as in the screening tests. GE-AEP will assist in selecting the test specimens.

6.0 TEST REPORT

A memo-type test report shall be completed to present the results and conclusions of the test program.

7.0 TEST SCHEDULE

The wear test program shall be completed in accordance with Figure B-1.

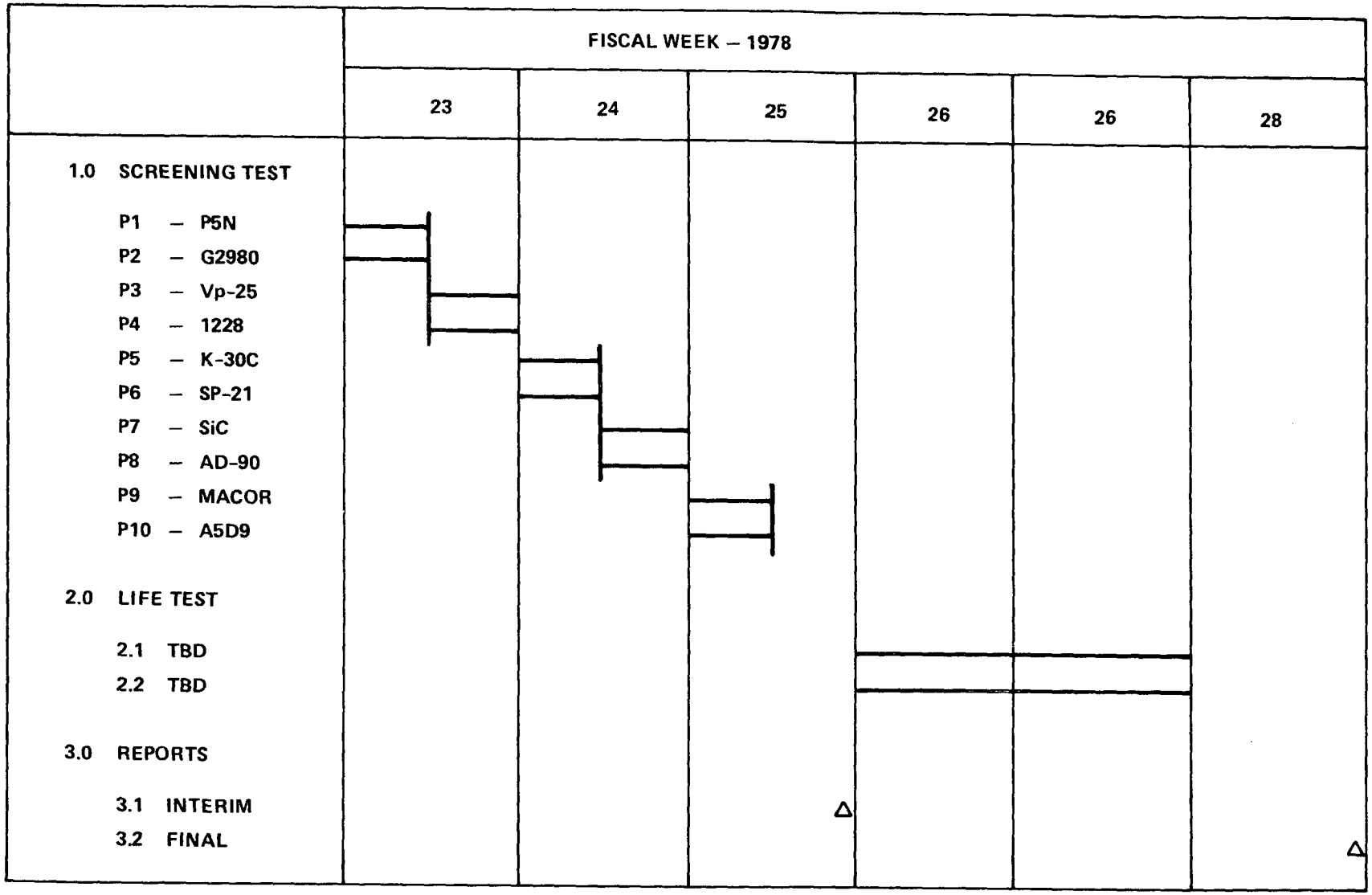

Figure B-1. Bearing/Seal Wear Life Testing Schedule

GENERAL ELECTRIC

295A8104
CONT ON SHEET ~ SH NO. 1

REV NO. 1 2 3

295A8104
CONT ON SHEET ~ SH NO. 1

TITLE SLEEVE, WEAR SPECIMEN

FIRST MADE FOR H.A.H.P.

P/N	NAME	MATERIAL
P1	SLEEVE	CARBON GRAPHITE, P5N (PURE CARBON)
P2		CARBON GRAPHITE, G2980 (WICKES)
P3		FLUON, VP-25 (POLYFLON CORP.)
P4		ENVEX, 1228, (ROGERS CORP.)
P5		K-30C, PTFE (KOPPERS CORP.)
P6		VESPEL, SP-21 (DUPONT CORP.)
P7		SI C (COOR'S)
P8		AD-90 (COOR'S)
P9		MACOR (CORNING)
2 P10	SLEEVE	VISTAL (COOR'S)

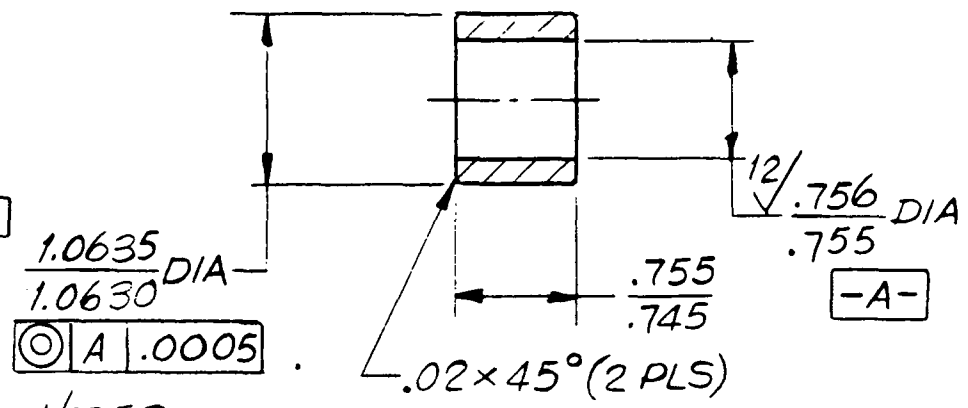

P1 THRU 10

NOTES
1- MARK "295A8104 P__" PER 118A1526, CLASS 17.

UNLESS OTHERWISE SPECIFIED USE	APPLIED PRACTICES	SURFACES 125√	TOLERANCES ON MACHINED DIMENSIONS: FRACTIONS ±	DECIMALS ± .01	ANGLES ± 2°

REVISIONS		PRINTS TO
1	ADDED P7 THRU P10	FILE "B"
2	INC EWA 78-6-78	
3	INC EWA-78-7-143	

MADE BY K. L. Johnson 4/18/78
ISSUED MJB/POSR 4/19/78
APPROVALS

ESP — DIV OR DEPT
PHILA., PA. — LOCATION

295A8104
CONT ON SHEET ~ SH NO. 1

PF-803-P (2-74) PRINTED IN U.S.A.

GENERAL ELECTRIC

221B3087

UNLESS OTHERWISE SPECIFIED USE THE FOLLOWING:—

APPLIED PRACTICES	SURFACES	TOLERANCES ON MACHINED DIMENSIONS: FRACTIONS	DECIMALS	ANGLES
	125	±	± .02	± 1°

REV NO 1 2

221B3087 CONT ON SHEET ~ SH NO 1

TITLE SHAFT, TEST

FIRST MADE FOR H.A.H.P.

P/N	NAME	MATERIAL
1,2	SHAFT	ALLOY STEEL, AMS 6414 TYPE B5Y17A2
3,4	SHAFT	NITRALLOY 135 (SEE NOTE-5)

REDUCED SIZE PRINT

SCALE 0 1 2 INCHES

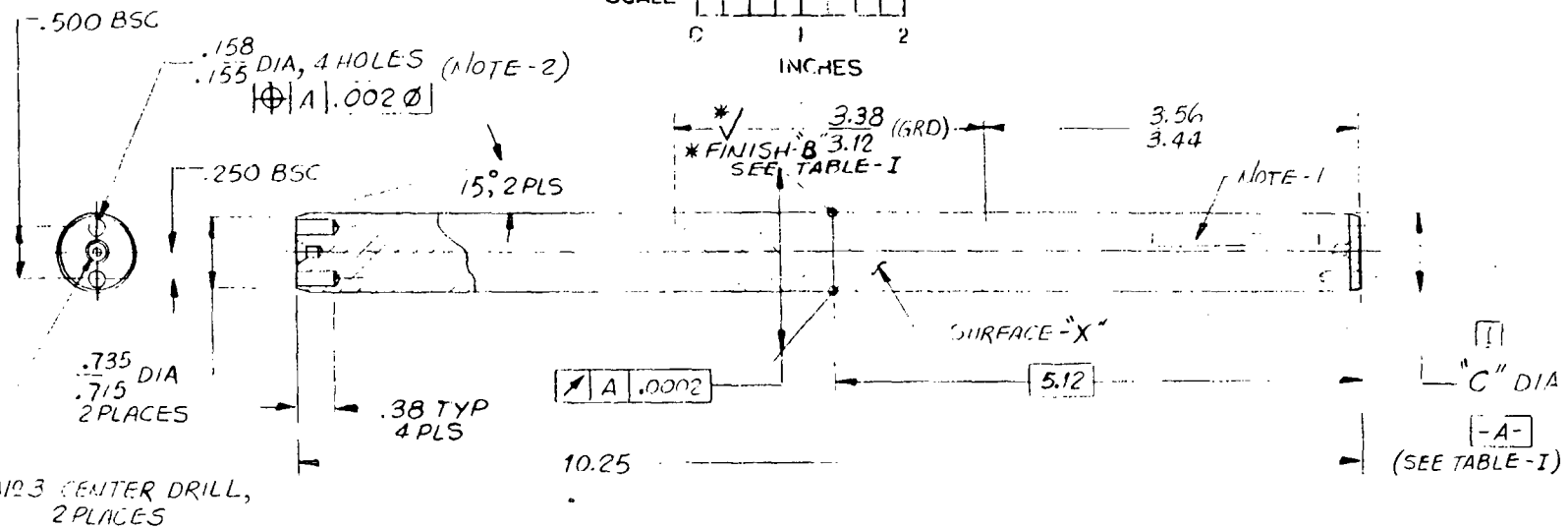

NOTES;

1- MARK "221B3087P_ " PER 118A1526, CL4 IN AREA SHOWN.

2- FINISH BOTH ENDS AS SHOWN, NO ANGULAR REQUIREMENTS BETWEEN ENDS.

3- CLEAN PER P102 & HEAT TREAT TO OBTAIN R_C 55-60 SURFACE HARDNESS. (P1 & P2)

4- HARD CHROMIUM PLATE PER F70D6A3. DIM'S & FINISH (SURFACE "X") APPLY AFTER PLATING. (P1 & P2)

5- MAT'L (P3 & P4) NITRALLOY 135 PER B5E152, ANNEALED & TEMPERED COND. (1200°F ± 50°F FOR 1 HR ± 30 MIN). SHAFT SHALL BE CASE HARDEN TO A DEPTH OF .008-.012 IN. BY THE FLOE PROCESS, PRIOR TO BEING GRINDED OR LAPPED TO FINISHED DIM'S.

TABLE-I

PART NO.	MACHINE FINISH "B"	DIA "C"
P1	16±2	.7495
P2	8±2	.7490
P3	16±2	.7495
P4	8±2	.7490

REVISIONS

PRINTS TO

MADE BY 4/13/78 ISSUED 4/14/78

APPROVALS

DIV OR DEPT

PHILA., PA. LOCATION

221B3087 CONT ON SHEET SH NO 1

PF-806-F (4-76) PRINTED IN U.S.A.

GENERAL ELECTRIC

Space Division

Headquarters: Valley Forge, Pennsylvania ☐ Daytona Beach, Fla. ☐ Evendale, Ohio

☐ Huntsville, Ala. ☐ Bay St. Louis, Miss. ☐ Houston, Texas ☐ Sunnyvale, Calif.

☐ Beltsville, Md. ☐ Tacoma, Wash. ☐ Palmdale, Calif. ☐ Bedford, Mass.

☐ Washington, D.C. Area