GE DOCUMENT NO. 78SDS4223

DEVELOPMENT AND DEMONSTRATION OF A STIRLING/RANKINE GAS ACTIVATED HEAT PUMP

CONTRACT NO. EC-77-C-02-2911

SEMI-ANNUAL REPORT

NO. COO/2911-2

JULY THROUGH DECEMBER 1977

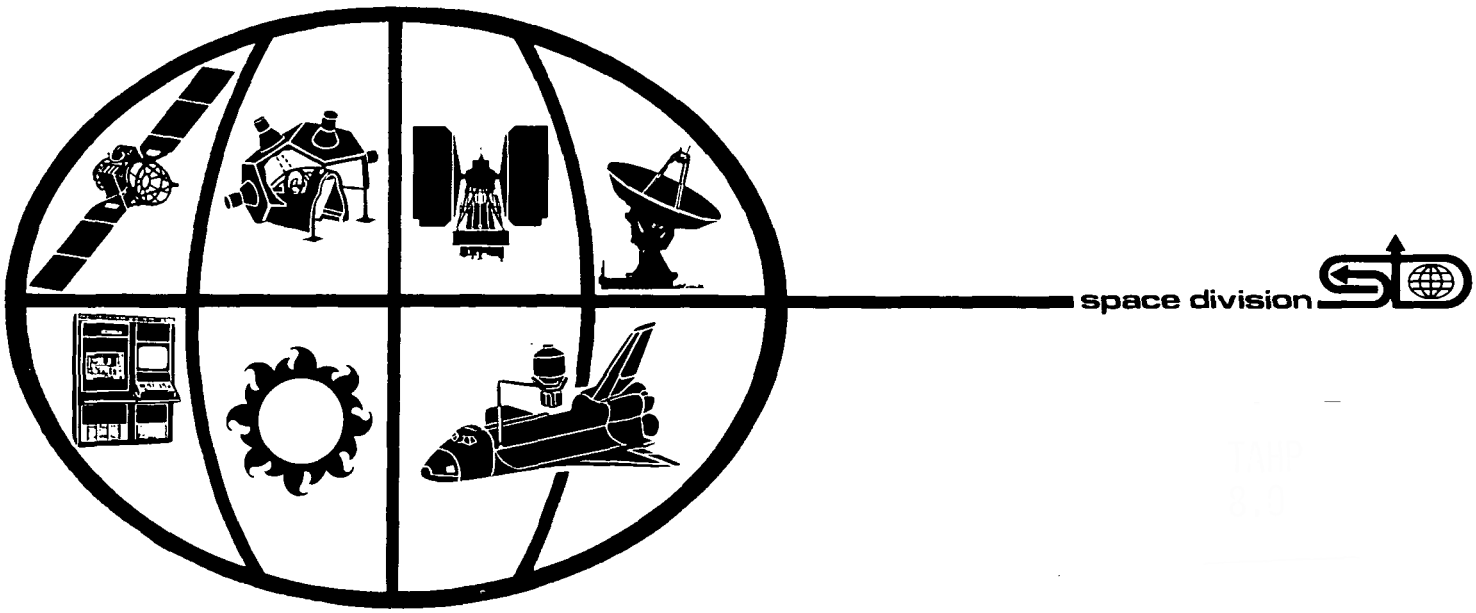

space division

GENERAL ELECTRIC

GE DOCUMENT NO. 78SDS4223

DEVELOPMENT AND DEMONSTRATION OF A STIRLING/RANKINE GAS ACTIVATED HEAT PUMP

CONTRACT NO. EC-77-C-02-2911

SEMI-ANNUAL REPORT

NO. COO/2911-2

JULY THROUGH DECEMBER 1977

GENERAL ELECTRIC

SPACE DIVISION

Valley Forge Space Center

P. O. Box 8555 • Philadelphia, Penna. 19101

TABLE OF CONTENTS

Section		Page
1	INTRODUCTION	1-1
	1.1 Background	1-1
	1.1.1 Phase I Results	1-1
	1.1.2 Phase II Objectives	1-1
	1.1.3 Phase II Prior Accomplishments	1-4
	1.2 Progress Summary	1-8
2	PRODUCT DESIGN	2-1
	2.1 Introduction	2-1
	2.2 Operating Mode Analysis	2-1
	2.3 Failure Mode and Effects	2-8
3	PRODUCT DEVELOPMENT	3-1
	3.1 Introduction	3-1
	3.2 Combustor	3-1
	3.2.1 Combustor Summary	3-1
	3.2.2 Test Objectives	3-3
	3.2.3 Combustor Performance	3-4
	3.2.4 Advanced Combustor	3-12
	3.2.5 Ceramic Burner Development	3-12
	3.3 Compressor Development	3-14
	3.3.1 Summary	3-14
	3.3.2 Compressor Design Features	3-14
	3.3.3 Compressor	3-18
	3.3.4 Test Results	3-21
	3.4 Stirling Engine Development	3-27
	3.4.1 Summary	3-27
	3.4.2 Fabrication	3-28
	3.4.3 Assembly and Facility Integration	3-30
	3.4.4 Free Piston Stirling Engine Test Plan	3-35
	3.4.5 Starting Technique	3-35
	3.4.6 Predicted Performance	3-37
	3.4.7 Alternate Regenerator Configuration	3-40
	3.5 Air Handler Development	3-41
	3.5.1 Summary	3-41
	3.5.2 Test Plan	3-41
	3.5.3 Test Facility	3-41
	3.5.4 Tuning Tests	3-43
	3.5.5 Parametric Test	3-44

TABLE OF CONTENTS (Cont'd)

Section	Page
APPENDIX A FREE PISTON STIRLING ENGINE TEST PLAN	A-1
APPENDIX B AIR HANDLER TEST PLAN	B-1

LIST OF ILLUSTRATIONS

Figure		Page
1-1	Phase I Flow Diagram	1-2
1-2	Phase II Flow Diagram	1-3
1-3	Prototype 1 Configuration	1-7
2-1	Modulated vs Constant Firing Rate	2-4
2-2	System Performance-Modulated vs Constant Firing Rate	2-5
2-3	Engine Power Optimization	2-7
2-4	Constant Firing Rate vs Stepped	2-9
2-5	System Performance-Constant Firing Rate vs Stepped	2-10
2-6	System Performance-Constant Firing Rate vs Stepped	2-10
3-1	Exploded View of Combustor Hardware	3-2
3-2	Prototype 1 Combustor Performance	3-5
3-3	Combustor Performance Test Results	3-7
3-4	Temperature Distributions	3-9
3-5	Pressure Drop as a Function of Excess Air and Firing Rate	3-10
3-6	CO Emissions	3-11
3-7	Development Ceramic Burner	3-13
3-8	Prototype 1 Compressor Assembly	3-15
3-9	Prototype 1 Compressor Cylinder Assembly	3-16
3-10	Prototype 1 Compressor Cylinder Head Assembly	3-16
3-11	Prototype 1 Compressor Mid-Housing Assembly	3-17
3-12	Prototype 1 Compressor Piston	3-17
3-13	Assembled Prototype 1 Compressor	3-18
3-14	Compressor Natural Frequency as a Function of Ambient Temperature	3-20
3-15	Engine/Compressor Operating Modes (Unregulated)	3-20
3-16	Prototype 1 Compressor Pressure Regulator Sectional View	3-22
3-17	Prototype 1 Compressor - Relief Valve Sectional View	3-23
3-18	Pressure Reference Characteristics	3-24
3-19	Prototype 1 Compressor Performance	3-24
3-20	Prototype 1 Compressor Unit 2	3-25
3-21	Spring Tube Design Stress Data	3-26
3-22	Tubular Spring Coil Endurance Test Facility	3-27
3-23	Engine Housing Assembly	3-28
3-24	Heater Head/Regenerator Assembly	3-29
3-25	Engine Housing Internal Assembly	3-29
3-26	Finished Housing Assembly	3-20
3-27	Finished Components for Piston	3-31
3-28	FPSE Assmelby	3-33
3-29	FPSE Subassemblies	3-24
3-30	Engine Assmelby in Test Facility	3-34

LIST OF ILLUSTRATIONS (Cont'd)

Figure		Page
3-31	Controls, Instrumentation, Safety Circuitry, Data Acquisition and Recording Equipment	3-35
3-32	Test Engine Starting Mechanisms	3-36
3-33	Free Piston Dynamic Model Comparison	3-38
3-34	Engine Load Sensitivity	3-38
3-35	Prototype 1, Unit 1, FPSE/Pneumatic Load Dynamic Performance	3-39
3-36	Indoor Test Facility	3-42
3-37	Outdoor Test Facility	3-43
3-38	Temperature (^{o}F) and Pressure (PSIA) Map - Data Point 1 (Cooling)	3-46
3-39	Temperature (^{o}F) and Pressure (PSIA) Map - Data Point 19 (Heating)	3-47

LIST OF TABLES

Table		Page
1-1	Subsystem Status	1-8
2-1	Alternatives	2-3
2-2	SPF Modulated vs Constant Firing Rate	2-6
2-3	SPF Alternative Comparison	2-11
2-4	Preliminary Failure Mode Effects Assessment Heat Activated Heat Pump	2-12
3-1	Air Handler Test Matrix	3-45
3-2	Comparison of Test Data and Performance Predictions	3-45

SECTION 1

INTRODUCTION

SECTION 1
INTRODUCTION

1.1 BACKGROUND

In January 1975, General Electric embarked with AGA on a multi-phase program for the development of a Gas Heat Pump (GHP). The Department of Energy (DOE) joined General Electric and the American Gas Association in the (AGA) program in 1976.

Phase I of the program was completed in December 1975, and Phase II was initiated in February 1976.

1.1.1 PHASE I RESULTS

The Phase I program followed the task structure shown in Figure 1-1. The primary objective of this program was to evaluate, through an analytical effort, if a gas heat pump product could evolve into a viable business venture. A comparison of the possible heat activated heat pump concepts showed that the Stirling/ Rankine and the absorption cycle were the most promising from the standpoint of performance (potential operating savings), region of application, and market application (residential and/ or commercial); the product design was performed in sufficient detail to show that the variation in manufacturing costs of the candidate systems would not significantly affect payback considerations. Further refinement of the design, cost, and performance for the two candidate systems and a definition of product introduction scenario and pricing strategies allowed a business evaluation of the two concepts to be completed. The results of these efforts were reviewed within GE and with AGA and gas industry representatives. As a result of Phase I effort, the Stirling/ Rankine concept was selected as the most promising approach and a decision was made to proceed with the Prototype Development, Phase II.

1.1.2 PHASE II OBJECTIVES

The objective of the Phase II program is to demonstrate that the performance estimates generated during Phase I can be realized and that cost goals are realistic. The Phase II task flow diagram is shown in Figure 1-2.

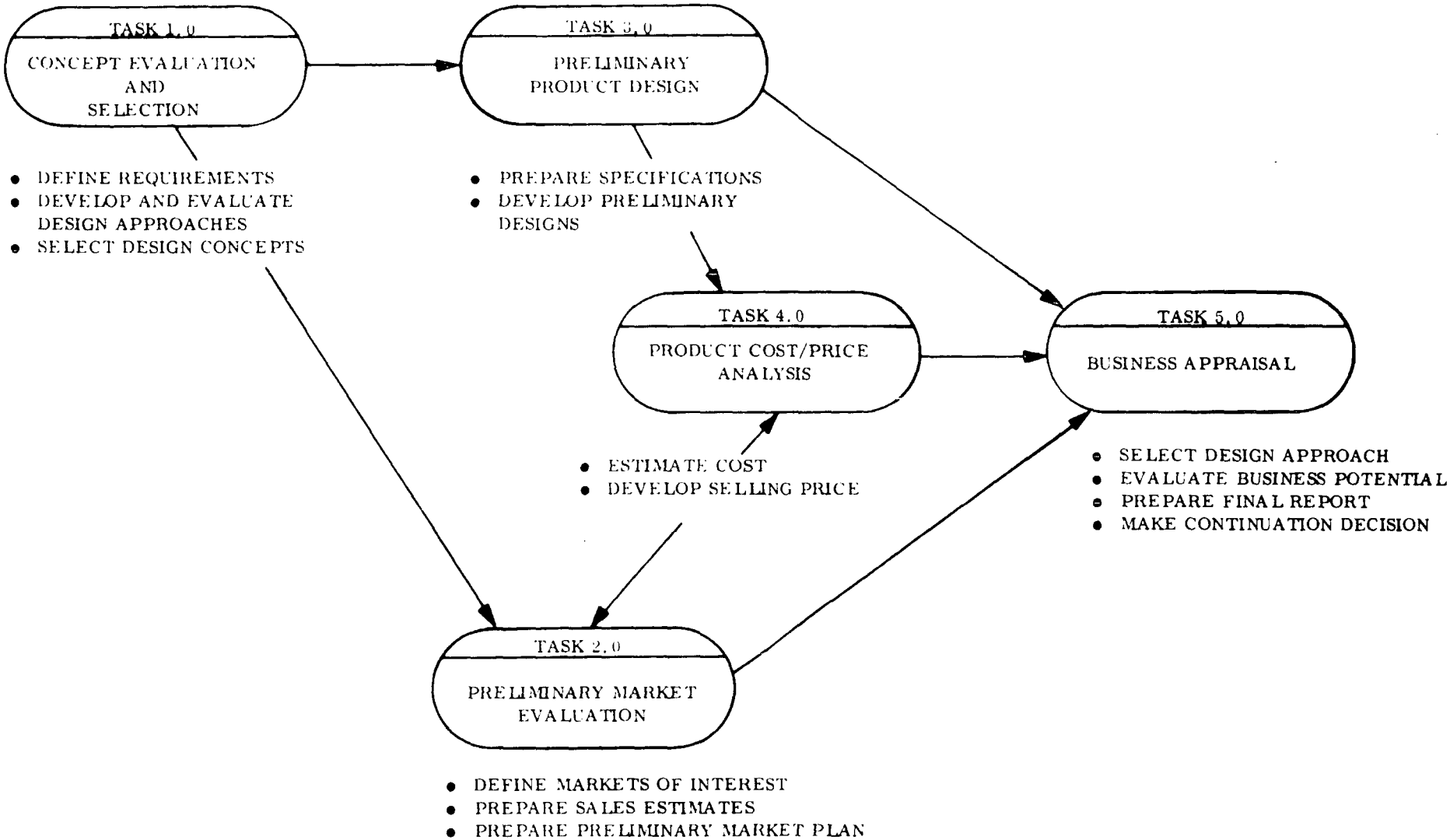

Figure 1-1. Phase I Flow Diagram

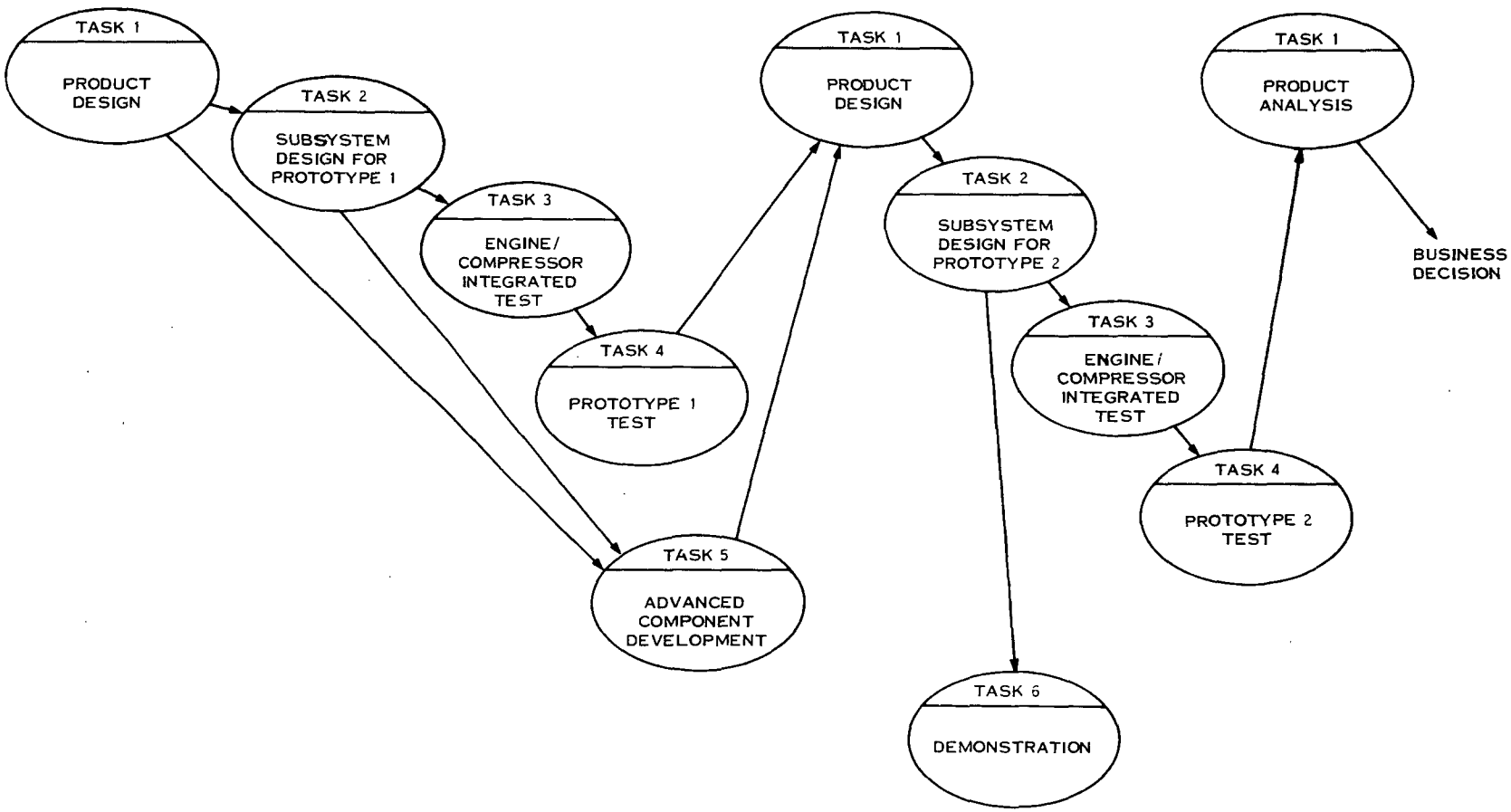

Figure 1-2. Phase II Flow Diagram

Two generations of prototype hardware will be developed during the Phase II program. Prototype 1 will be the first attempt to test, on a system level, the Stirling/Rankine GHP with heat pump configured hardware. This system will be comprised of hardware which is primarily developmental in nature. The Prototype 2 system will consist of more mature hardware.

1.1.3 PHASE II PRIOR ACCOMPLISHMENTS

The gas heat pump can be described in terms of five major subsystems: the natural gas combustor, the Stirling engine, the refrigerant compressor, the controls, and the air-handlers.

The Prototype 1 GHP will be a 3-ton, split system providing approximately 64,000 BTU/hr in the heating mode at a nominal 45°F ambient temperature. The overall product performance goal is to achieve coefficients of performance (COP) of 1.6 and 0.85 for the heating and cooling modes, respectively (excluding the electrical power requirements). The electrical power required for fans, blowers and pumps is targeted at less than 1500 watts. Based on these performance levels, the following performance goals can be assigned to the major subsystems:

- Stirling Engine Cycle Efficiency: 32%
- Refrigeration Loop COP: 3.5
- Overall Combustion Efficiency: 80%

The following sections summarize the accomplishments during prior Phase II reporting periods for each of the subsystem areas.

1.1.3.1 Combustor

The development of the low pressure drop, high energy density radiation cooled transpiration burner was completed. The bench testing of the combustor enabled the burner to be characterized in terms of its design parameters - air preheat, temperature, percentage of excess air, porosity, thickness, and base material thermal conductivity of the flame holders; also, it enabled the design for the Prototype 1 combustor to be selected. The

cylindrically shaped flame holder employing a metal weave fabricated from Hoskins 875 alloy was tested over a wide range of parameters:

- A turn down ratio of 3 to 1 (60,000 Btuh firing rate to 20,000 Btuh)
- Excess air of 0% to 30%
- Preheat of 0°F to 1000°F

Bench testing of a development combustor indicated that an overall heat transfer efficiency of 85% is attainable. As a result, Prototype 1 combustor design was finalized.

1.1.3.2 Compressor

A test program to characterize a double acting inertia compressor was undertaken in order to acquire data to assist in the design of the Prototype 1 compressor. Parts and piston configurations from a standard heat pump compressor were used; this expedited the Prototype 1 design and allowed evaluation of the approach for prototype implementation.

The compressor was initially tested using air as the working fluid. In this test, the compressor was mounted on a vibration test facility. This testing confirmed the GE design approach for an inertia compressor; the data on air corresponded well with predicted values. Subsequently, the compressor was characterized employing Refrigerant-22 as the working fluid. A variable speed crank-arm mechanism driven by an electric motor provided the excitation stroke, and a 5-ton single package heat pump acted as the test load for the compressor. The compressor was fully instrumented including two linear velocity displacement transducers which made it possible to measure the dynamic pressures as a function not only of time, but also as a function of the compressor piston displacement. These measurements facilitated the interpretation of the test data and provided the means to verify analytical prediction techniques. The compressor was performance mapped as a function of pressure ratio, excitation stroke, and frequency; an isentropic efficiency approaching 75% was achieved. Design of a double acting compressor for the Prototype 1 application was initiated.

1.1.3.3 Engine/Compressor Assembly

Significant effort has been devoted to analyzing the dynamic interactions between the Stirling engine and the inertia compressor. A design of the three body resonant system evolved which operates stably over the entire heat pump ambient temperature operating range of interest. Sufficient latitude was provided in the engine design parameters - displacer rod diameter, the displaced gas spring volume, the power piston weight, and the charge pressure - so that the engine/compressor performance can be adjusted during the testing phase of the program. Detail drawings were finalized and fabrication of the free piston Stirling engine was initiated during the prior reporting period.

1.1.3.4 Controls

The controls for Prototype 1 were designed, components were selected and parts were received; assembly of the control box was started. The Prototype 1 design incorporates a time delay relay implementation of the start sequence. Although the implementation may eventually be electronic, the relay approach allows increased test flexibility at this early stage of development. The controls are designed to interface with standard GE-ACBD (Air Conditioning Business Division) control components. The gas control selected was a unit recently developed by Fenwall for GE-ACBD applications. Safety controls incorporated in Prototype 1 include engine temperature, high/low refrigeration pressure, low cooling fluid flow and engine over-stroke protection.

1.1.3.5 Outdoor and Indoor Units

The outdoor unit configuration for Prototype 1 is illustrated in Figure 1-3. The unit is characterized by three compartments housing the various assemblies - the combustor/engine/compressor assembly, the refrigerant and hydronic outdoor coils and blower assembly, and the piping compartment. Significant in this configuration is the vertical orientation of the combustor/engine/compressor assembly in the rear compartment. Prototype 1 was also configured to provide easy access to heat pump components in order to facilitate servicing and component exchange at the expense of overall size. Design of the outdoor unit was completed, all components were fabricated, and assembly of the outdoor package was initiated during 1976. The indoor unit is a conventional GE air Handler (WE960C)

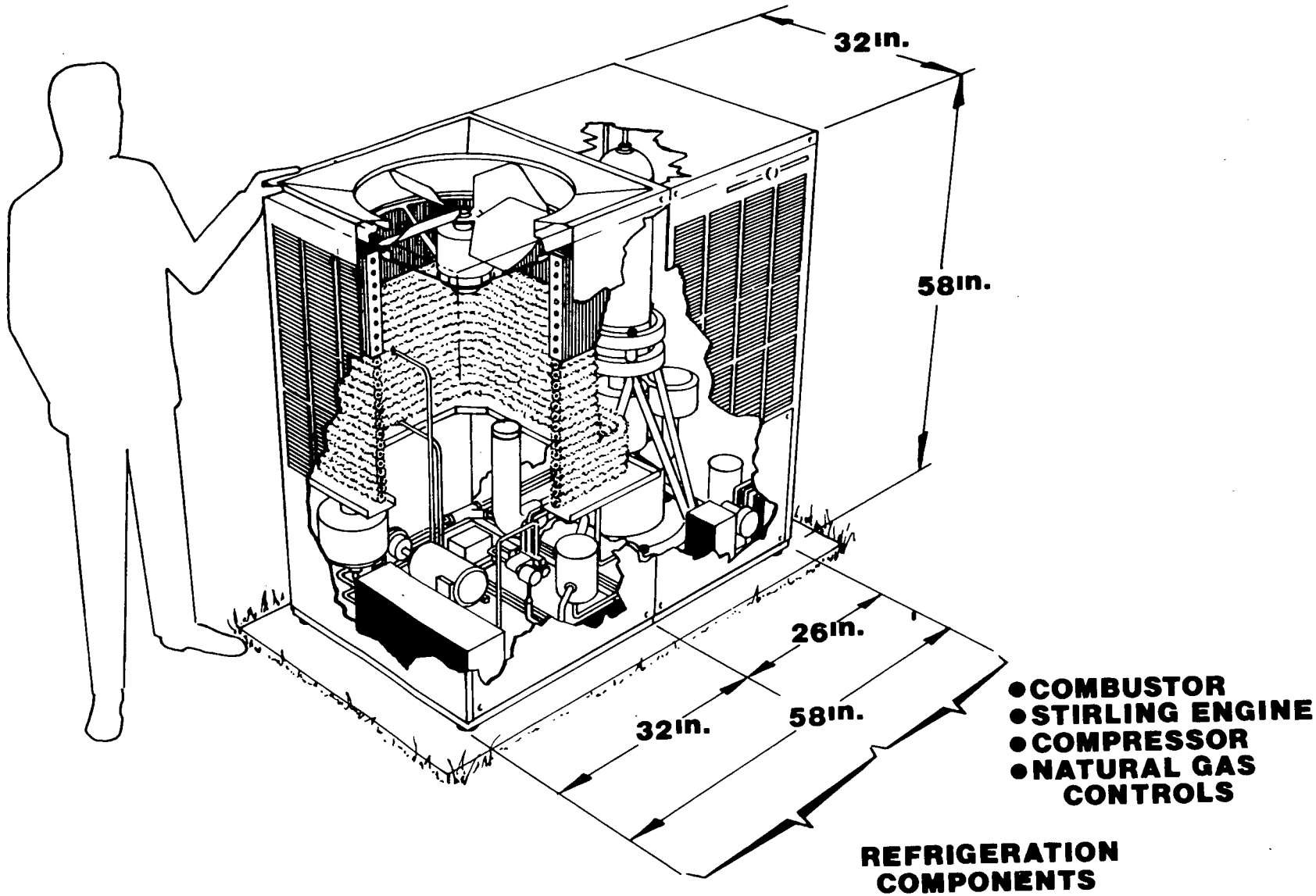

Figure 1-3. Prototype 1 Configuration

modified to incorporate the waste heat coil. The particular model selected has a 5-ton capacity which was modified to permit flexibility when testing the 3-ton GHP. Drawings for the unit were completed and the unit was procured. Modifications to the evaporator were completed at GE-ACBD in Trenton, New Jersey. The assembly of the package was completed, including the refrigeration loops and instrumentation and check of final assemblies.

1.2 PROGRESS SUMMARY

The work effort during the fourth 6-month period of Phase II concentrated on the following activities: analysis of firing rate and operation selection; investigation of failure modes; fabrication assembly and test of the Prototype 1 combustors; Prototype 1 compressor fabrication, assembly and test; fabrication and assembly of the Stirling engine and preliminary engine testing; testing of the air handler and control assemblies. Table 1-1 presents the current hardware status.

Table 1-1. Subsystem Status

SUBSYSTEM	STATUS
Combustor	• Performance tested, characterized • Integrated with Stirling engine for engine test
Engine	• Assembly complete • Test initiated
Compressor	• Assembly complete • Compressor performance characterized
Air Handlers and Controls	• Heat exchanger balanced • Refrigeration controls demonstrated • Optimization at cooling design point complete

SECTION 2

PRODUCT DESIGN

SECTION 2
PRODUCT DESIGN

2.1 INTRODUCTION

During this reporting period, the product design efforts were directed towards evaluating alternative Gas Heat Pump operating modes. The analysis included a theoretical characterization of the overall system performance sensitivity to the Stirling engine combustor firing rate. The ambient temperature effects on refrigerant compression loads were also taken into account. Section 2.2 presents a summary of the methodology and results of that study. The discussion includes a description of the predicted prototype performance over the ambient temperature range of interest in designing HVAC systems. Finally, Section 2.3 discusses the product design considerations for consumer safety. A product safety assessment, which includes a Preliminary Failure Mode and Effects Analysis is presented.

2.2 OPERATING MODE ANALYSIS

Most of the currently available electric heat pumps operate at a constant compressor speed. This mode of operation leads to a low compressor power loading and a reduced heat pump capacity at cold ambient temperatures, while it produces an excess output capacity at moderate ambient temperatures. This type of output capacity trend is opposite to the outdoor ambient temperature dependent thermal load demand for most residential space conditioning applications. Hence, a standard electric heat pump might require auxiliary heating during a cold day operation. On the other hand, it would probably produce an excess capacity with some accompanying on-off cycling efficiency losses during a moderate temperature day operation. For a gas heat pump application, design considerations have shown that speed is not a convenient parameter by which to control a Free Piston Stirling Engine. Therefore, in choosing a Gas Fired Heat Pump control mode there is an opportunity for obtaining a capacity output characteristic which is better matched to typical space conditioning thermal loads over the ambient temperature range of interest.

The total system output capacity of a vapor compression heat pump can be directly related to the prime mover or motor power output. Therefore, power control offers a direct method for establishing a more desirable system capacity characteristic. A thermodynamic analysis has shown that for the Prototype #1 engine/compressor, there is a unique and predictable relationship between the power delivered to the refrigerant load and the combustor firing rate. This implies that there is a high potential for using the combustor firing rate to directly control both the engine power and the overall system output capacity.

The simplest and most direct method of combustor control would be to design for a constant combustion firing rate. However, this approach does not result in a good match between the system output capacity and the building thermal load. On the other hand, a totally modulated firing rate schedule could be designed so that the system capacity would closely match the conditioned space thermal load requirement over the entire ambient temperature range of interest. Such an operating mode would require a complex control scheme, but it could result in both a low frequency of on-off cycling and a refrigeration loop COP improvement during moderate outdoor temperature operation. A possible intermediate approach consists of stepping the combustion rate in several discrete increments.

This approach results in a closer match between total output capacity and building thermal load than results from a constant firing rate. However, the match is not as close as can be realized with a continuously modulated firing rate. Table 2-1 compares some of the characteristics of the alternative operating modes.

The performance of each approach can be evaluated in terms of the engine power and efficiency, the compressor and refrigeration loop performance, and the overall system capacity. Figure 2-1 illustrates a comparison of the component performance parameters for both the constant and the continuously modulated firing rate modes of operation. Several characteristics shown in Figure 2-1 are unique to a modulated operating mode. For example, Figure 2-1 (a) indicates that for a totally modulated operating mode, the engine power goes to zero at an ambient temperature where a typical residential space conditioning load would also be

Table 2-1. Alternatives

Operating Mode	Advantages	Disadvantages
Constant Firing Rate	• Fewest Hours of Operation • Simplest Control	• Greatest Number of Cycles - Reliability/Life - Performance
Modulated	• Fewest Number of Cycles • Improved Off-Design Performance	• Greatest Hours of Operation • Largest Parasitics • Most Complex Controls • Increased Combustor Complexity
Stepped	• Simple Controls • Reduced Cycling • Improved Off-Design Performance	• Increased Combustor Complexity

zero. Consequently, the refrigerant flow rate diminishes as the delivered engine power decreases. When the refrigerant mass circulation becomes less, the heat pump system heat exchangers, in effect, become over-sized. The net result is that the refrigeration loop COP increases significantly. This result is illustrated in Figure 2-1 (b). One major disadvantage of controlling engine power output by adjusting only the combustor firing rate is that the hot wall temperature decreases as the combustion rate is reduced. Consequently, the theoretical Stirling cycle efficiency degrades sharply as the firing rate decreases. See Figure 2-1 (c).

The overall performance of a modulated operating mode is compared with the performance of a constant firing rate operation in terms of the system COP in Figure 2-2. The illustration shows that modulation can result in an overall performance improvement over only part of the ambient temperature operating range. Unfortunately, the overall system efficiency degrades rapidly as the engine efficiency becomes a dominant factor during low power output operation. In order to evaluate the effect of combustor modulation for a Free Piston Stirling Engine Gas Heat Pump, the seasonal performance factors (SPF) were calculated for both

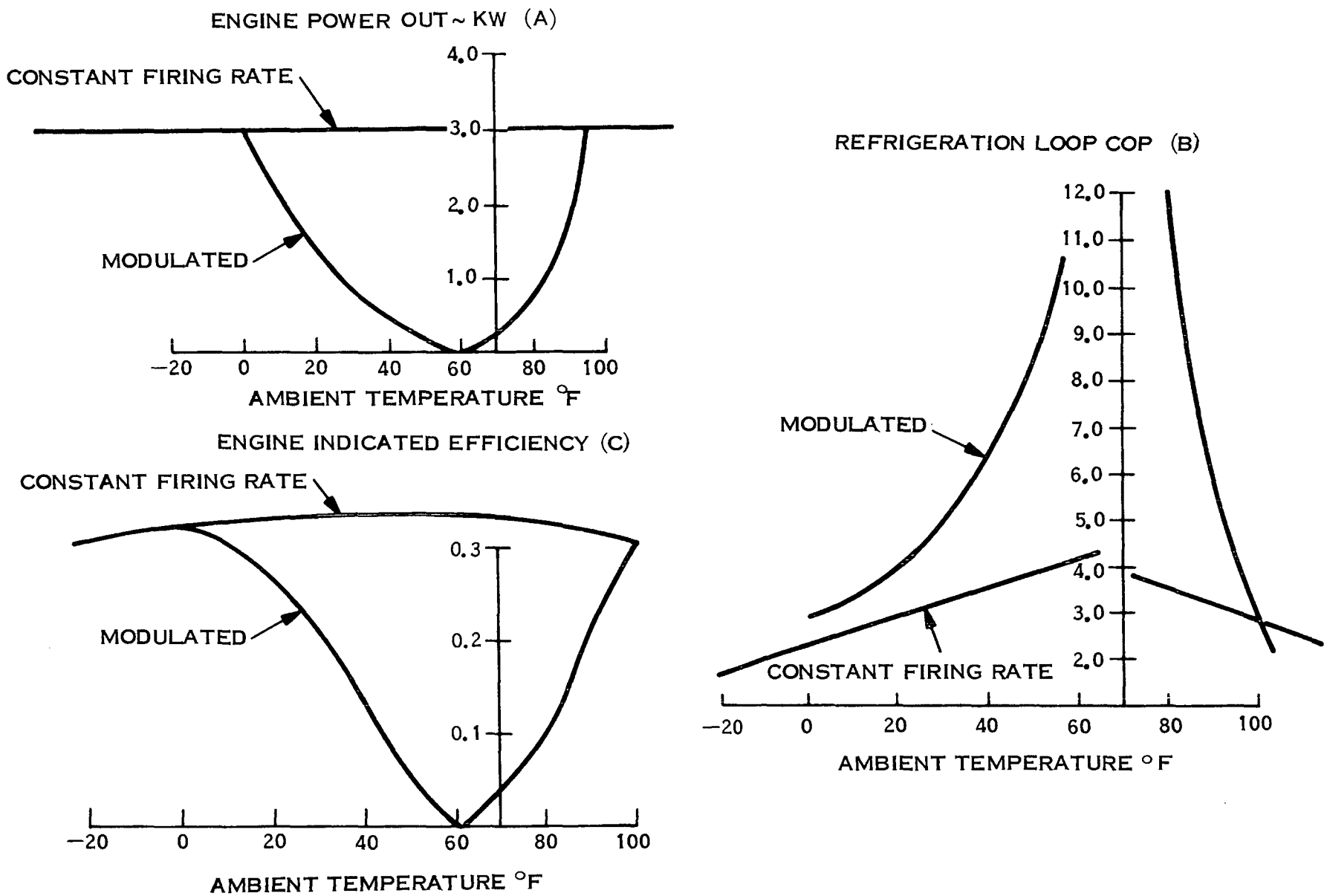

Figure 2-1. Modulated vs Constant Firing Rate

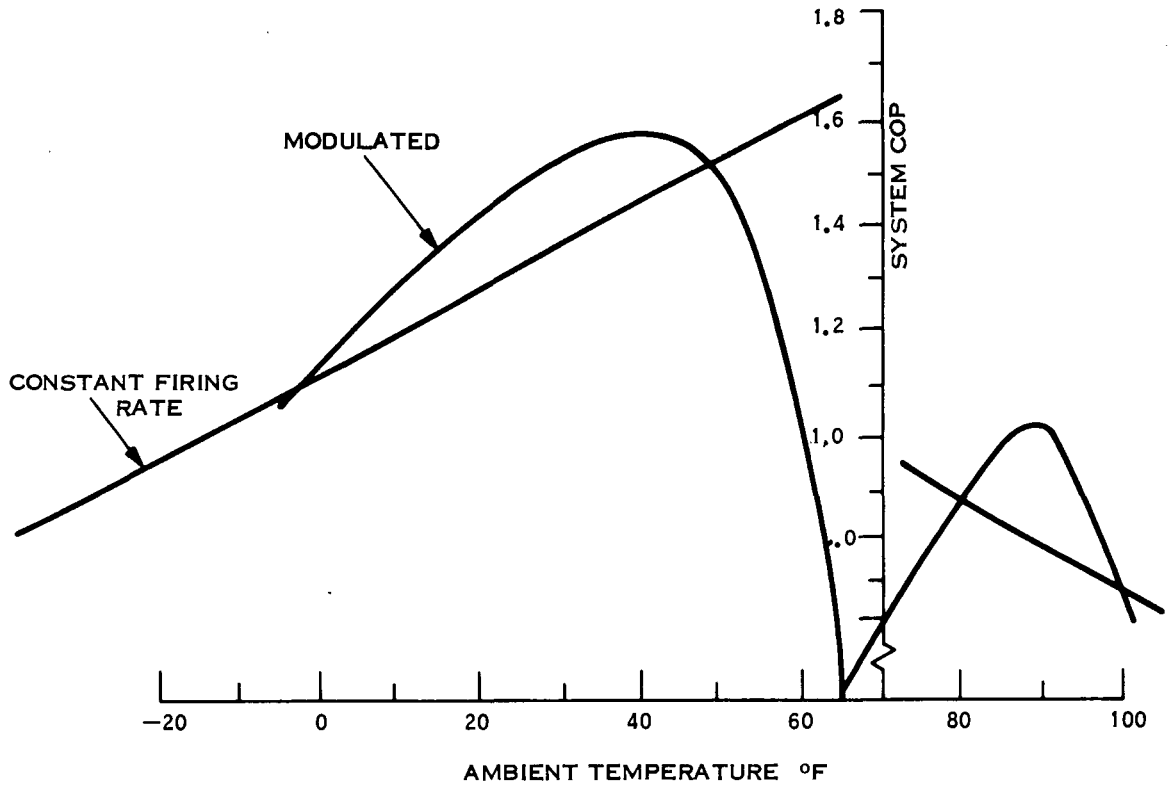

Figure 2-2. System Performance-Modulated vs Constant Firing Rate

the constant and the modulated modes of operation. A comparison of these results is shown in Table 2-2 for four geographically different applications. A large portion of the total annual space conditioning energy requirements occurs at moderate ambient conditions. In this ambient temperature range, the modulated performance is predicted to be low. Therefore, the constant firing rate mode of operation results in a lower annual energy consumption yielding a higher SPF calculation than that for the modulated mode of operation.

From the above discussion and from Figure 2-2, it can be concluded that a total modulation of the combustion firing rate will result in an overall performance increase only when the firing rate produces a large enough improvement in refrigeration COP to compensate for the reduction in engine efficiency. Therefore, appropriate combustion levels should be able to be identified such that the trade-off between the engine efficiency decrease and the refrigeration loop COP increase will result in a net overall performance improvement as compared

Table 2-2. SPF Modulated vs Constant Firing Rate

	Philadelphia	Chicago	Ft. Worth	Nashville
Constant Firing Rate	1.35 (1.00)	1.35 (1.01)	1.14 (.85)	1.22 (.91)
Modulated	1.20 (.90)	1.25 (.96)	1.05 (.81)	1.06 (.82)

Thermal SPF ____

Overall SPF (____)

with a constant mode of operation over the entire ambient temperature range. Some considerations which are basic to selecting a stepped firing rate schedule include the following:

- Should the air handler equipment operate at a stepped or a constant speed?
- What engine power levels would be required?
- At which ambient temperatures should the combustion level be stepped?

The approach to designing a stepped operating mode schedule consisted of finding a combination of solutions to the above items which would result in the calculated minimum system energy input over an entire heating/cooling season. This was done by optimizing the ratio of the system energy output to the energy input with respect to the developed engine power and at various ambient temperatures and corresponding building loads. This ratio can be expressed as:

$$\text{Energy Ratio} = \frac{(\text{Building Total Thermal Load} @ T_{ambient})}{(\text{System Total Energy Input} @ T_{ambient})}$$

Optimizing this expression with respect to engine power provided a solution giving a power output schedule which results in an optimum system efficiency. A similar analysis was completed for identifying the optimized component heat exchanger air flow rates. The analysis

concluded that a constant indoor and a constant outdoor air flow rate would satisfy the heating and cooling load demand while minimizing the total system energy input.

The locus of the optimum-efficiency power output is plotted in Figure 2-3. The figure indicates that at the extreme heating and cooling mode outdoor temperatures, the engine power which yields an optimum system efficiency is less than the engine power required by the system to meet the building thermal load demand. At the moderate ambient temperatures, the optimum-efficiency engine power profile remains nearly constant. Over this ambient temperature range, the resulting system capacity can adequately satisfy the building thermal loads. The proposed two step power schedule shown in Figure 2-3 is a compromise approach between the required and the optimum power. The power schedule consists of a constant and nearly optimum-efficiency power schedule at moderate (32°F - 82°F) ambient temperatures and a sufficiently high constant power during the respective heating and cooling mode outdoor temperature extremes. At these ambient temperatures the engine power must be large enough to develop the required system capacities.

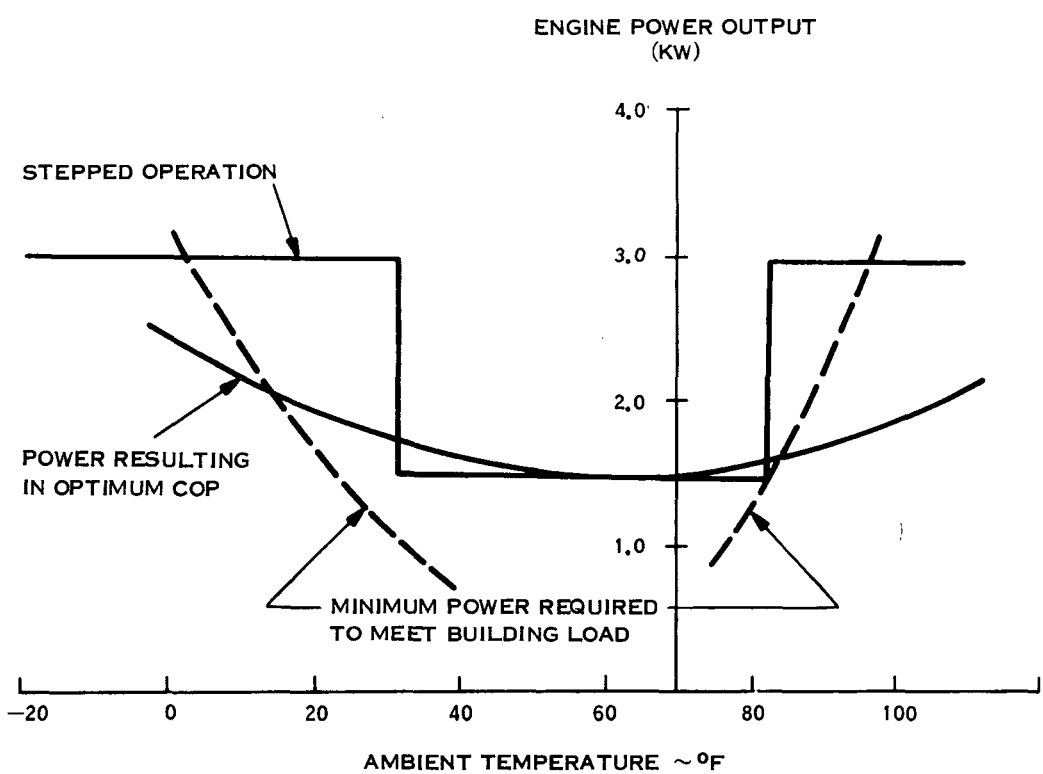

Figure 2-3. Engine Power Optimization

Theoretically, the cycle efficiency of the Free Piston Stirling Engine remains nearly constant, regardless of the refrigerant load suction and discharge pressures, provided that the combustion firing rate does not change and that the compressor natural frequency remains sufficiently high. The natural frequency of the compressor can be controlled by a regulated pressure gas spring. A discussion of the theory and operation of a regulated free piston compressor is developed in Section 3.3. The requirement for a constant combustor firing rate implies that a simple dual cpacity combustor could yield the desired two-step power output schedule. The two-step operating mode schedule shown in Figure 2-3 was used to calculate the engine efficiency and refrigeration loop COP's. These calculated parameters are compared with those of a constant firing rate schedule in Figure 2-4 a, b, and c. Although the engine efficiency degrades at the lower power output (Figure 2-4, a), the gain in refrigeration loop COP (Figure 2-4, b) more than compensates for this loss such that a net steady state overall system performance improvement is realized at the reduced power level. This feature is indicated in the plot of the stepped mode overall system performance depicted in Figure 2-5. The resultant two-step total system capacity output is equal to that of the constant firing rate system at the ambient temperature extremes, but is is substantially reduced during the low building-load/moderate-ambient-temperature operation. These characteristics are illustrated in Figure 2-6. The reduction in capacity should provide for an additional performance benefit by decreasing the frequency of the system on-off cycling and the associated overall performance losses. In order to assess the relative performance benefits of a two-step operating mode, seasonal performance factor (SPF) calculations were completed and compared with SPF calculations for a constant firing rate operation. These results are listed in Table 2-3. As the optimization approach predicted, the two-stepped operating mode schedule resulted in an operating mode which can satisfy the building thermal load demand, and which consumes the least amount of energy.

2.3 FAILURE MODE AND EFFECTS

As part of the product development activity, a Preliminary Failure Mode and Effects Assessment was completed on the heat activated heat pump during this reporting period. The results

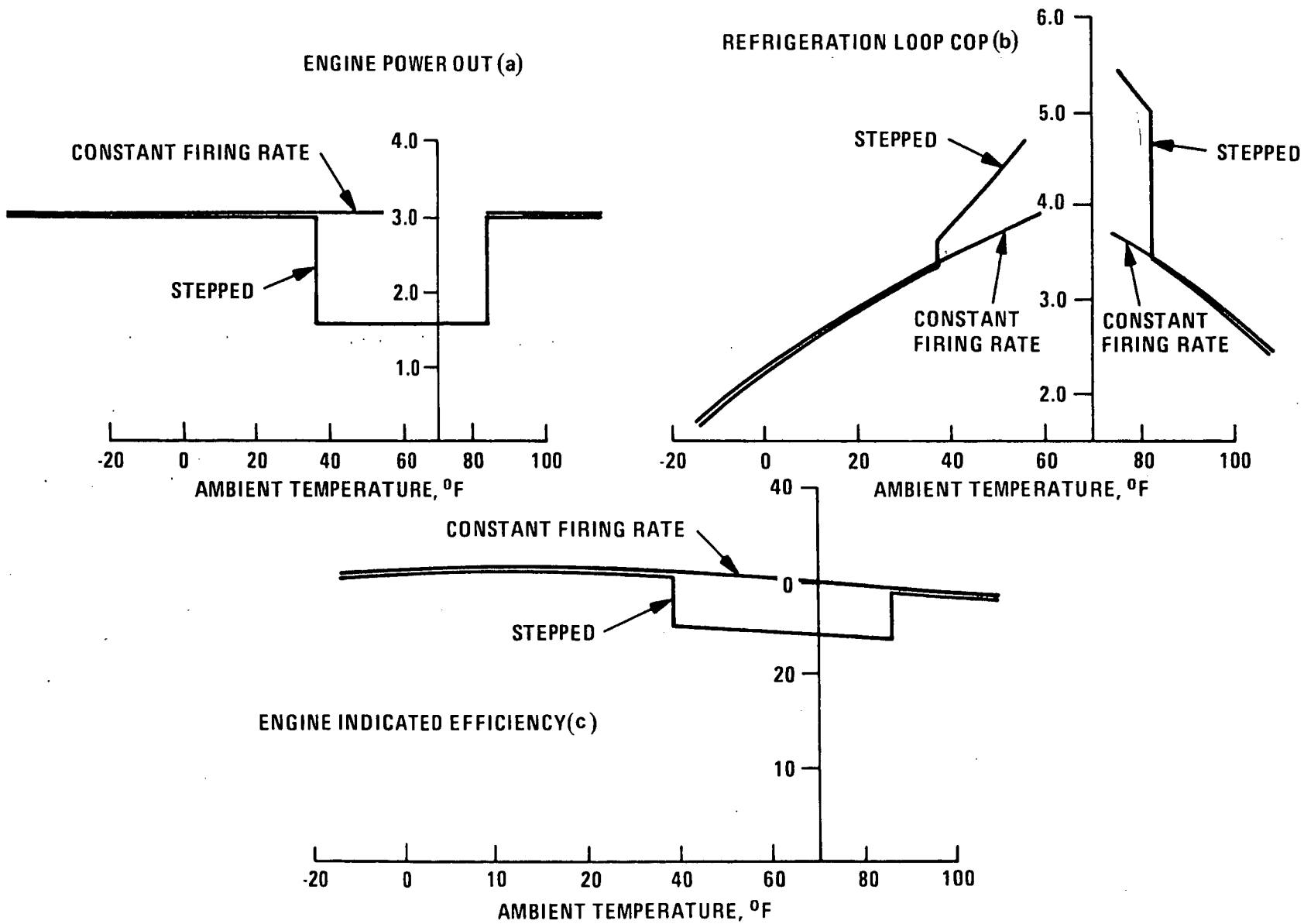

Figure 2-4. Constant Firing Rate vs Stepped

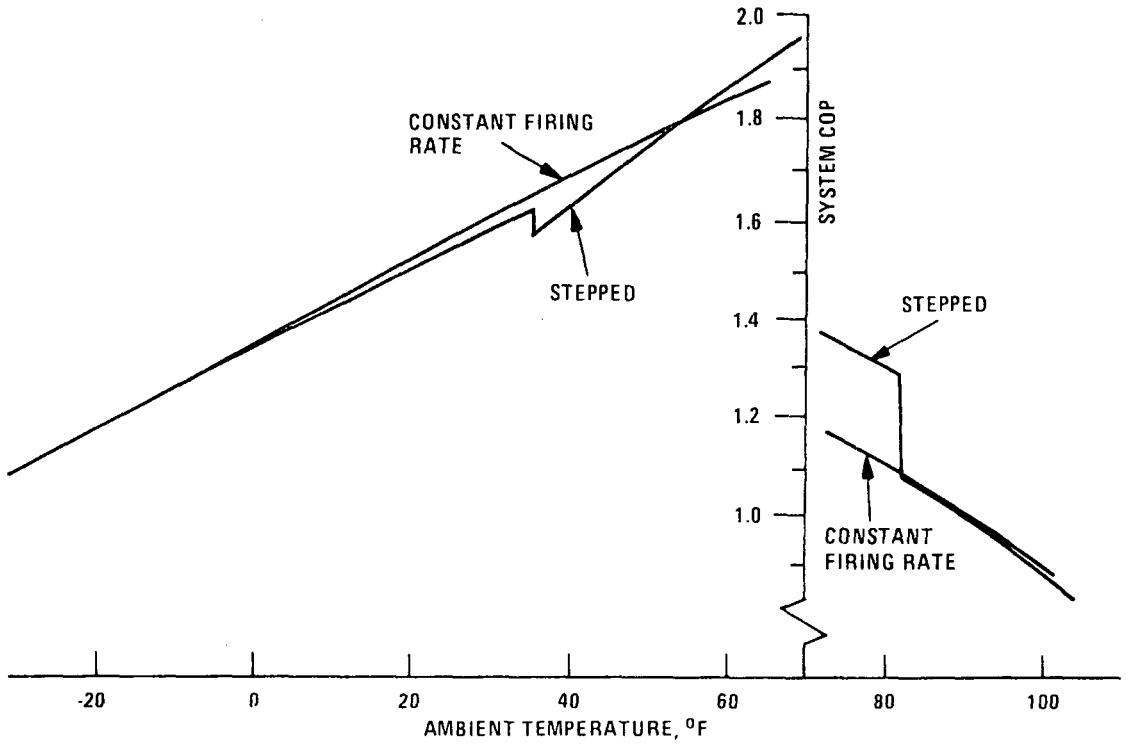

Figure 2-5. System Performance-Constant Firing Rate vs Stepped

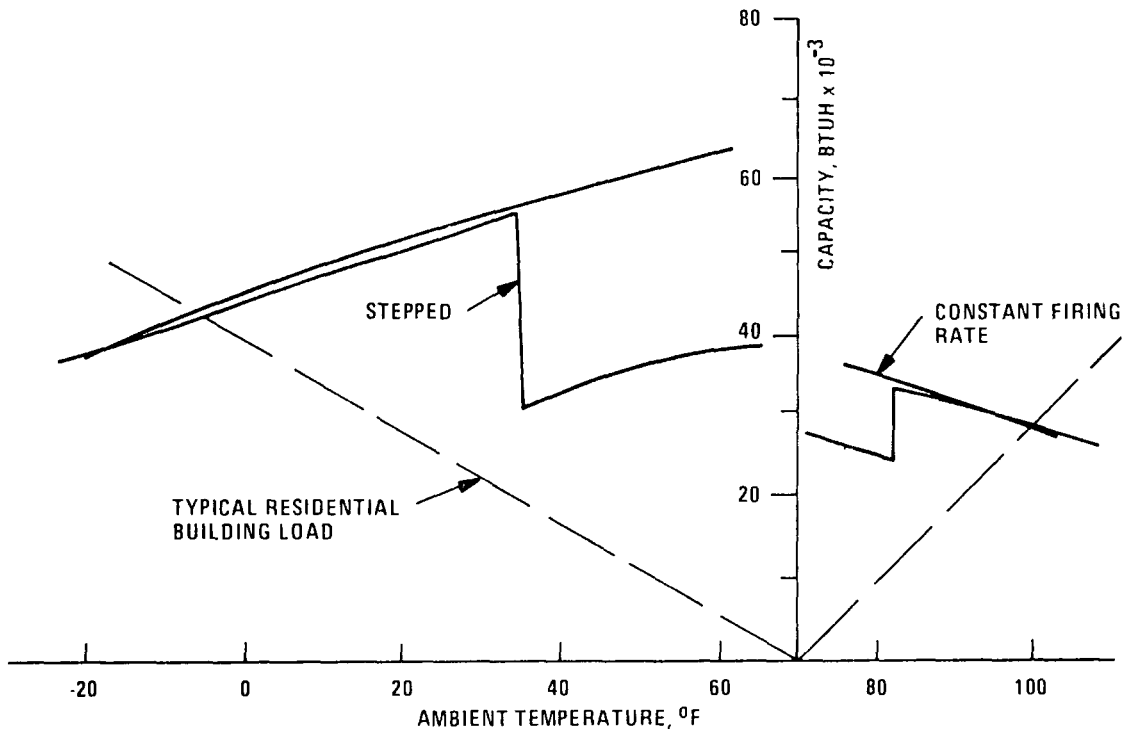

Figure 2-6. System Performance-Constant Firing Rate vs Stepped

Table 2-3. SPF Alternative Comparison

	Philadelphia	Chicago	Ft. Worth	Nashville
Constant Firing Rate	1.35 (1.00)	1.35 (1.01)	1.14 (.85)	1.22 (.91)
Modulated	1.20 (.90)	1.25 (.96)	1.05 (.81)	1.06 (.82)
Stepped	1.36 (1.18)	1.35 (1.19)	1.18 (1.00)	1.26 (1.07)

Thermal SPF ____

Overall SPF (____)

of this product evaluation are shown in Table 2-4. A list of some 15 potential failure modes are identified. The next column of Table 2-4 identifies the subsystems affected by the postulated failure mode. The probable cause of the failure mode is followed by the potential hazard, and, finally, the product's safety and control features associated with the system response to failure are shown in the last column of the table. The listing serves as a means of checking potential hazards which may be eliminated by design. Some postulated modes may require additional analysis or testing to develop quantitative data for values of probable occurrence. Many of the postulated failure modes are limited when meeting safety standards such as UL559. However, the unique aspects of a gas fired heat pump as compared to a standard electric heat pump require further examination and evaluation. The listing also serves as a tool for evaluating the adequacy of the product specification.

Table 2-4. Preliminary Failure Mode Effects Assessment Heat Activated Heat Pump

FAILURE MODE	SUBSYSTEMS AFFECTED	PROBABLE CAUSE	POTENTIAL HAZARD	SAFETY AND CONTROL FEATURES
1. Loss of coolant	Hydronic S.S., Feed pump, Engine/ Compressor	Leak-thru vibration isolator, in cooler, thru valve	Exceed hot wall temperature, overpressure	Low flow switch activated, gas supply shut off
2. Loss of flame	Gas valve, blower, preheater, regulator, combustor	Wind, water accumulation, momentary interruption of gas supply, dirty nozzle	Gas accumulation to explosive potential	Flame detector circuit, gas supply shut off
3. O/D Fan failure	Hydronic coil O/D, refrigerant coil O/D, refrigerant loop	Locked rotor, short, low voltage	Excessive refrigerant pressure, overstroke, engine loss of load regulation	Compressor discharge high pressure switch in refrigerant line terminates gas supply
4. I/D Fan failure	I/D Hydronic/ Refrigerant coils	Locked rotor, short, low voltage	Refrigerant coil, hydronic coil, excessive pressure	System design pressure adequate, no active control
5. Loss of electrical power	Indoor and Outdoor units	Fuse, external supply interrupted, short	Frozen pipe	Inoperable system
6. Loss of helium	Engine, compressor, combustor, vibration mounts support structure	Leak-heater head or tubes, bounce space, eng/comp adapter	Overstroke, overtemperature	Overtemperature switch on heater head shuts down combustor
7. Loss of freon	Compressor, engine, vibration mounts, support structure	Leak thru 4 way valve, vibration isolator, relief valve	Overstroke, overtemperature	Refrigerant low pressure switch activated
8. Non-condensible gas accumulation (refrigerant loop)	Condensor/ evaporator coils, expansion valves/ compressor	Improper charging, low temp. (<-40°F) exposure, helium leak	Refrigeration overpressure reduced condensing capability	Same as 3
9. Frosting of coils	ID/ OD coils, refrigerant loop	Defrost control failure, 4 way valve failure	Same as (3)	Defrost control circuit, reverses refrigerant cycle
10. Fatigue failure refrigerant suction or discharge lines	Engine/ compressor, refrigerant loop	Fatigue failure of suction/ discharge spring	High pressure helium enters lower pressure refrigerant system (overstroke-overtemperature)	Refrigerant pressure relief valve activated
11. Fire	All	External source or electrical short in unit, gas leakage	Overpressure, solder join failure	Helium/ R22/ Hydronic pressure relief valve (fusible plug)
12. Lack of ignition	Regulator, gas valve, igniter, flame detector controls	Ignition relay failure, ignition board F, broken ignition wire, fuel air ratio improper	Gas accumulation potential explosive environment	Same as 2
13. Lack of combustor purge	Gas valve, blower, controls	Blower failure, control failure	(Same as above)	Low combustion air flow switch, terminates gas supply
14. Vibration mount failure	Engine/ compressor, burner	Fatigue failure of supporting structure, misalignment causing overheating of vibration mount	Structural damage	Inherent in design
15. Loss of seal (combustor to heater head)	Combustor, engine heater head	Vibrational compaction of seal material between preheater and heater head	Hot exhaust gas flow thru damaged seal, possible exposed flame	Same as 14

SECTION 3

PRODUCT DEVELOPMENT

SECTION 3
PRODUCT DEVELOPMENT

3.1 INTRODUCTION

The product development effort during this reporting period concentrated on the fabrication, assembly, checkout testing, and initiation of performance tests for the combustor, engine and compressor subsystems. Three units of each subsystem were fabricated along with selected spare parts. Alternate components, which represented configuration and/or material variations, were also manufactured in preparation for both component and prototype level evaluation. The controls and air handler subsystems which were procured and partially assembled during the first half of 1977 were fully assembled, integrated into the test facilities, and performance tested. Advanced concepts of components within the different subsystems were evaluated and the designs completed. Several designs were committed to hardware and the fabrication cycles were initiated. A description of the aforementioned activities and the year end status of all subsystems are presented in the following sections.

3.2 COMBUSTOR

3.2.1 COMBUSTOR SUMMARY

Three sets of the Prototype 1 combustor hardware were received during the second half of 1977. Two of these units were assembled with various modifications and subjected to both components as well as integrated testing with the Stirling engine. The combustor has performed well during these tests and has met or exceeded design performance requirements. The following paragraphs describe the activities during this reporting period. An exploded view of the combustor hardware is shown in Figure 3-1.

The initial assembly of the Prototype 1 Combustor operated with higher levels of carbon monoxide (CO) emissions than had been anticipated. Modifications reduced these emissions with some increase in the pressure drop across the unit. This unit was acceptable for integrated testing with the Stirling engine, and further combustor testing was conducted on the second combustor unit.

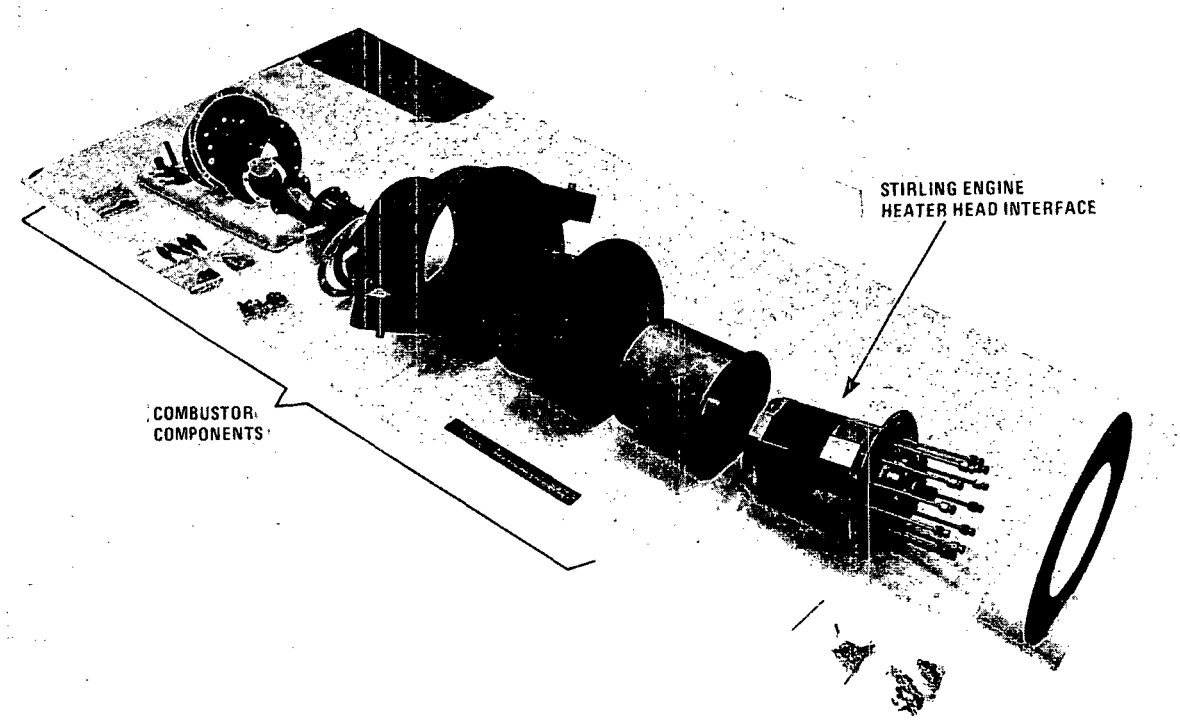

Figure 3-1. Exploded View of Combustor Hardware

Analysis of temperature readings taken during combustor operation and subsequent flow measurements indicated a poor air flow distribution through the preheater. This maldistribution produced non-uniform air-fuel mixing as evidenced by the high CO emissions. Modifications were made to the preheater inlet manifold and the air-fuel mixing area to reduce both the emissions and the pressure drop of the combustor. Baffling added to the inlet manifold produced an even flow through the preheater and into the air-fuel mixing area. The fuel was directed into the most turbulent region by blocking the distribution slot in the relatively "dead" region ahead of the three penetration tubes, (penetrations for igniter, flame detector and view port). These changes enhanced the overall performance of the combustor, bringing emissions and pressure drop to within design requirements, as will be described in the following sections of this report.

Integrated Stirling engine combustor testing was begun with major emphasis on engine operation. Because of this, the combustor was initially subjected to severe operating conditions (high temperatures) causing or contributing to a premature failure of the burner. The high temperatures are due to reduced engine performance during which the engine does not utilize

the heat generation of the combustor at a particular firing rate. Further testing at lower firing rates produced more satisfactory results. An evaluation of the data in conjunction with the component test results indicates the combustor is performing as predicted.

The performance of the modified Prototype 1 combustor is presented in the following sections. The majority of the testing performed was at the combustor subsystem level; however, information on operation with the Stirling engine is included where applicable. Since there are numerous publications discussing the parameters used to describe the combustor performance, only a brief explanation of each is given here.

During this time period several independent hardware tests were conducted on three items: various thickness feltmetal burners, ceramic burners, and combustor air supply blowers. The different thicknesses of feltmetal did not alter the flame uniformity but did improve the heater head performance as was anticipated. The only variations noticed were in the burner inside surface temperature, which is reduced as thickness increases, and in the pressure drop, which was higher for the thicker feltmetal. Several ceramic burners were fabricated and tested with encouraging results. The major difficulty encountered was in the sintering of the ceramic spheres to form the burner.

In addition to hardware testing, investigations for improving the combustor were begun which corporated design modifications of the Proto 1 combustor that should ease the combustor assembly and enhance its operation.

3.2.2 TEST OBJECTIVES

The objectives of the tests performed on the Prototype 1 combustor during this period were as follows:

1. To verify performance and obtain empirical data on the combustor performance over a wide range of operating conditions.

2. To evaluate the operational limitations and verify the safe and reliable operation of the combustor system.

3. To evaluate the modifications to the combustor design made to optimize its performance.

These objectives hold whether testing the combustor with different manifold configurations or burner thickness or while operating on the Stirling engine.

3.2.3 COMBUSTOR PERFORMANCE

3.2.3.1 Heat Exchanger Effectiveness

The performance of the combustor heat exchangers may be evaluated by examining the non-dimensional parameter, heat exchanger effectiveness. This parameter, represented by ϵ, is the ratio of the actual heat transfer to the maximum theoretical heat transfer possible. The effectiveness is dependent upon the flow capacitance ratio C_{min}/C_{max} and the heat transfer area number $NTU = AU/C_{min}$. The capacitance represents the heat transport capability of the working fluid (specific heat times massflow rate) while AU defines the physical limitations of the exchanger (area times the heat transfer coefficient). Since the capacitance ratios for the preheater and heater head are fairly consistant and equal to approximately 1.0 and 0.0, respectively, the effectiveness is compared to the heat transfer numbers only.

Overall, the performance of the Prototype 1 combustor duplicated the results of previous combustors, as shown in Figure 3-2. There was a slight increase in both effectiveness and NTU of the preheater at the low firing rate of 20 KBtu/hr. This increase is attributed to the modification made to the preheater inlet manifold to obtain a uniform flow pattern. The modification consisted of four baffles added at incremental circumferential locations around the outer wall of the preheater manifold. A directing vane was also inserted at the inlet area of the manifold. Flow testing indicated uniform air preheater exit temperatures during operation; thereby verifying that a more uniform flow had been established. The heater head used for testing was the same unit that was used in the previous combustor testing. This heater head configuration is identical to the Stirling engine assembly. However, the helium gas side of the heat exchanger is simulated by using water at sufficient flows to approximate similar

fluid film coefficients. Such an approach is valid because the heat exchanger performance is limited by the combustion side heat transfer characteristics rather than engine fluid side characteristics. There was no apparent change in effectiveness and NTU for this group of tests. The various thicknesses of burners also did not alter the performance of the heater head. Future testing will address the combustor heat exchangers performance during operation with the Stirling engine.

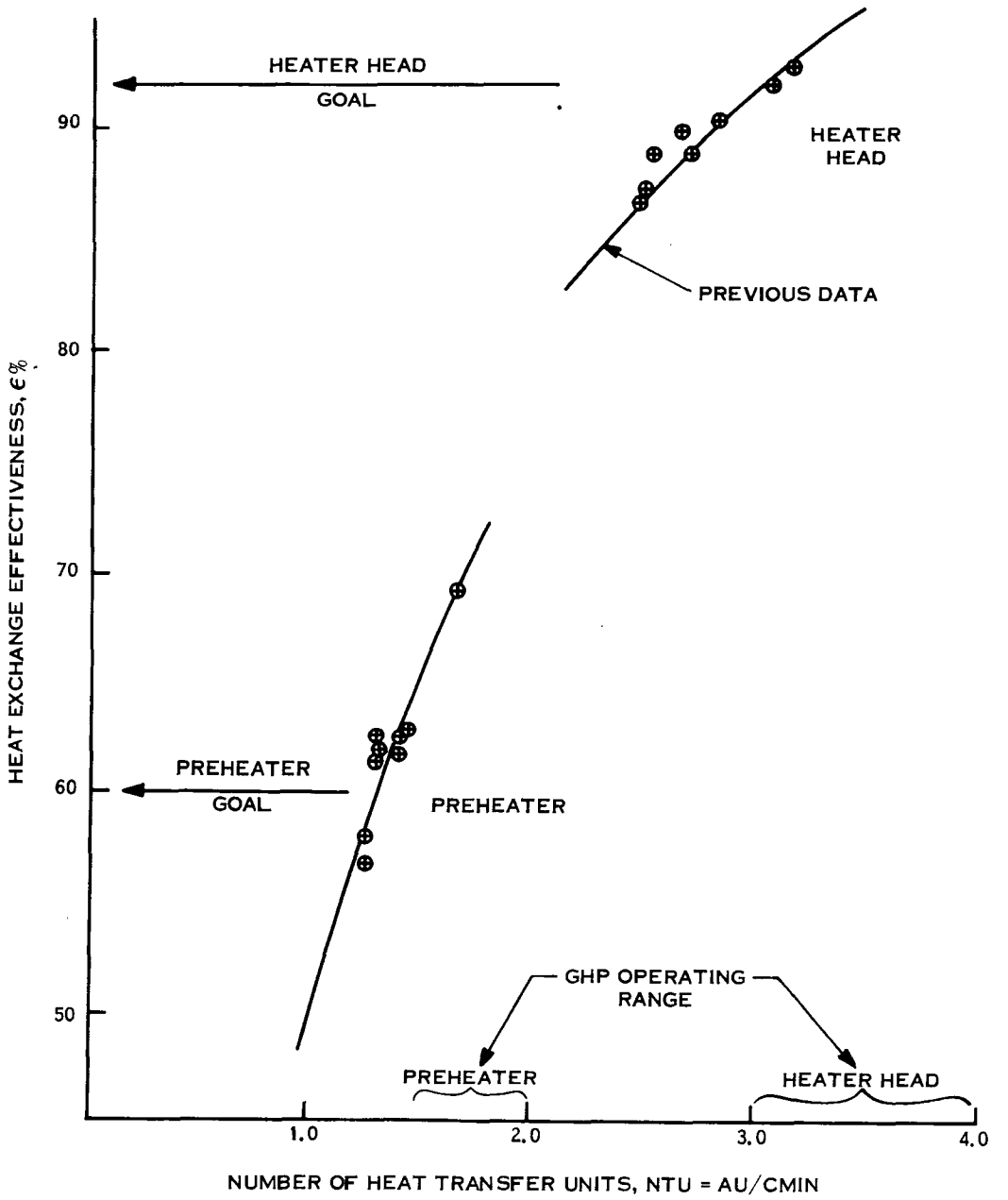

Figure 3-2. Prototype 1 Combustor Performance

3.2.3.2 Combustor Efficiency

Combustor efficiency is defined as the ratio of the total heat transfer (to the engine working fluid) to the total heat generated by the combustor (based on the lower heating value of the fuel, 930 Btu/hr-ft^3). The heat transfer quantities are difficult to measure directly; therefore, the losses from the combustor are measured or calculated allowing the indirect determination of efficiency. The major loss contributing to combustor inefficiency is the heat loss in exhaust gas. The effeciency based on this and a flue gas analysis of CO_2 content to determine excess over (stoichiometric) amounts of air is as follows:

$$\eta_{comb} = 1 - \frac{T_{exhaust} - T_{ambient}}{(35358) \qquad (\%CO_2)}$$

This is a satisfactory relationship for determining efficiencies when operating the combustor on the test stand. During this mode of operation the losses from combustor surfaces are negligible because of low preheater temperature. With operation on the engine, the preheater temperatures are significantly higher and associated losses must be compensated for. The thermal losses were calculated to be approximately 1800 Btu/hr at operating conditions. These losses were included in determination of combustor efficiencies during integrated testing with the Stirling engine.

The operating efficiencies of the final configuration of the Prototype 1 combustor are shown in Figure 3-3. Also included are the corresponding average fin temperature and the air preheat temperatures. The Prototype 1 combustor operation on the test stand is at the low exhaust temperature (< 300°F) while the operation on the engine is at exhaust temperatures from 600° to 750°F. The integrated combustor-engine operation was at temperatures in excess of predicted values. This mode of operation is due to engine operating conditions rather than combustor performance. When operating off design point the engine does not utilize the energy output of the combustor at design levels, thus the excess tends to overheat the unit. However, the data does support the prediction of combustor performance with expected engine operation. The average fin temperature will be ~ 1300°F to 1400°F. The preheat air temperature will be ~ 800°F and the combustor efficiency will be ~ 83 to 84%. This efficiency prediction includes increasing the combustor insulation to reduce thermal losses.

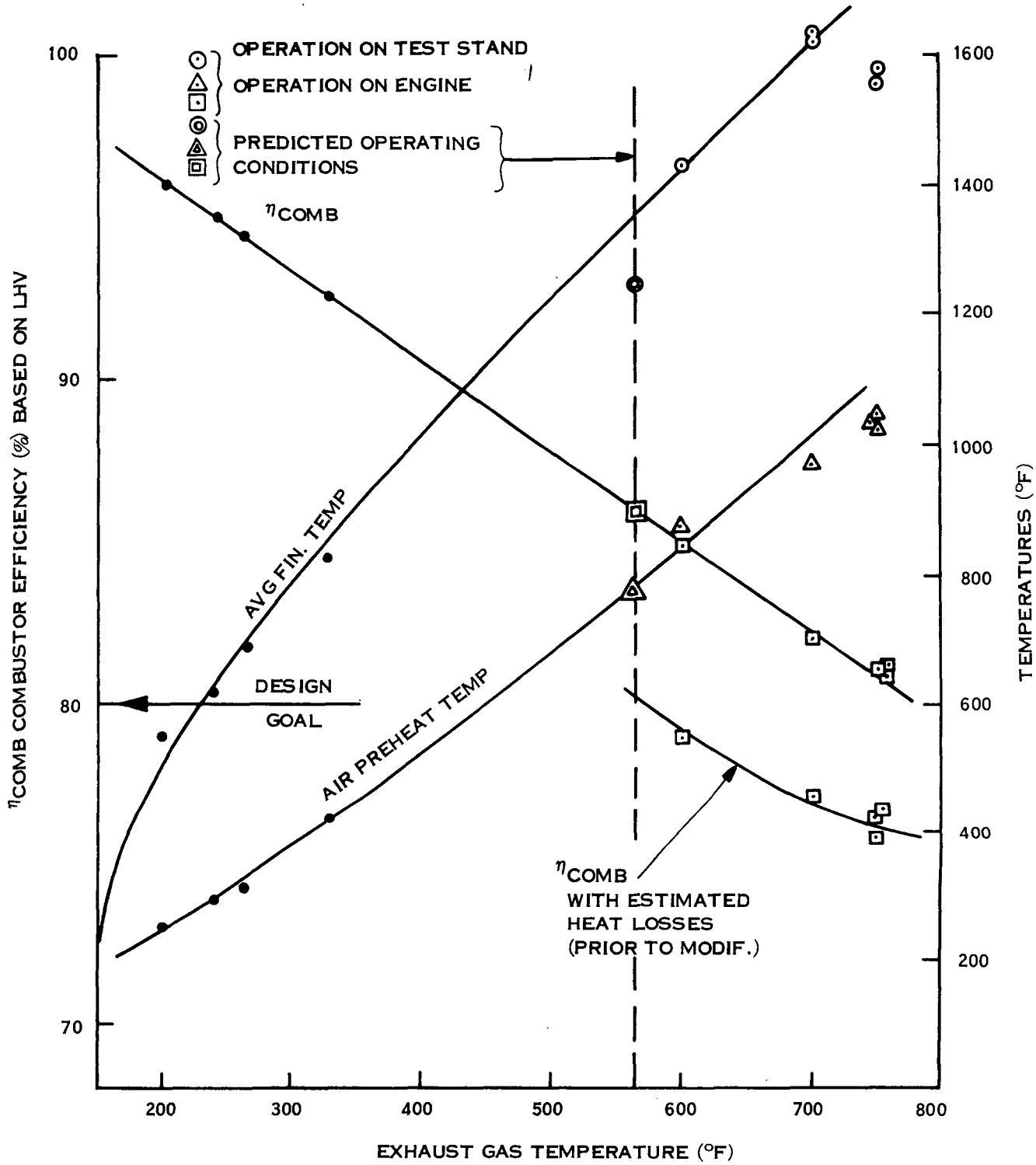

Figure 3-3. Combustor Performance Test Results, 15% Excess Air

The necessary modifications have been made and future engine testing should verify performance predictions.

3.2.3.3 Heater Head Temperature Distribution

A previous report indicated that heater head performance was not that which could be theoretically expected from a cross flow heat exchanger. This less-than-optimal performance was attributed to the nonuniform flow of air-fuel mixture through the burner. To improve the distribution various thickness (1/8, 3/16, 1/4 inch) feltmetal burners were tested in the combustor. It was believed the higher pressure drop through the thicker burners would improve the flow uniformity.

The test results indicated very little variation in the flow of the air-fuel mixture through the burner for different thickness. This can be seen in the graph of temperature vs. location for the 40 KBtu/hr firing rate, Figure 3-4. A similar relationship exists at the other firing rates of 20 to 60 KBtu/hr. The pressure drop across each of three burners varied only slightly with a maximum increase of 0.2 inches H_2O at the higher firing rate. This pressure drop may double when the combustor is run with the engine due to the higher preheat air temperatures. However, these small measured increases and the increase expected in engine operation are not significant in changing the flow distribution.

The thicker burner exhibited no advantage over the presently used 1/8 inch thick feltmetal to warrant their use in the combustor. Further development is planned to obtain improved heater head performance on the advanced combustor. These developments will be based on the concept that the burner and heater head together make up the matrix of the exchanger. In this type of arrangement, modifications must be made to the manifolds rather than the matrix to obtain uniform flow distribution.

3.2.3.4 Pressure Drop

Many modifications were made to the combustor to maintain a low pressure drop while increasing the degree of air-fuel mixing thereby obtaining low emissions level. A low pressure drop across the combustor is a prime consideration allowing utilization of a low pressure, low cost air supply blower.

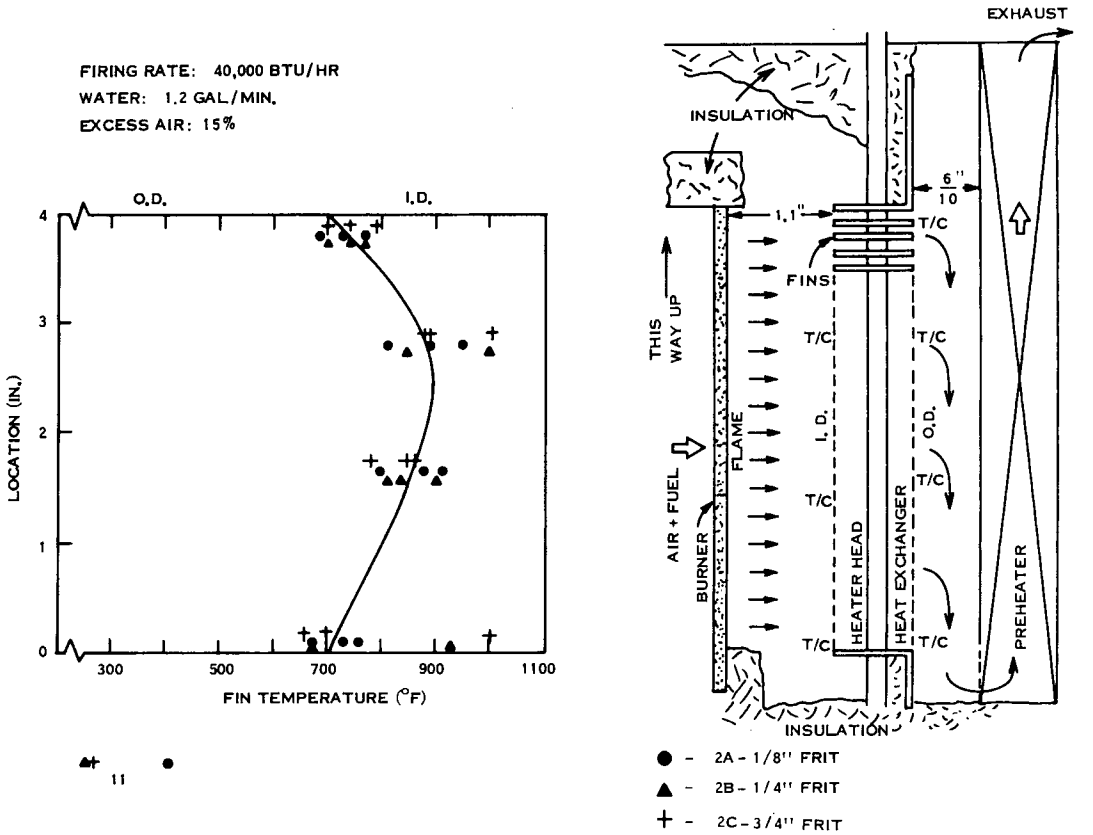

Figure 3-4. Temperature Distributions

Various modifications were made to the Prototype 1 configuration to arrive at an acceptable combination of pressure drop and emissions level. The pressure drop measurements made on the Prototype 1 final configuration are shown in Figure 3-5 at the three firing rates. The relation between pressure drop and excess air percentages over stiochiometric, indicated by the curve, represent performance while operating on the test stand with low preheat air temperatures. Combustor operation with the Stirling engine will approximately double the pressure drop at the various excess air levels due to the higher preheat air temperature. Several of the Stirling engine runs have verified this, in particular, 1.0 inches H_2O in a test at ~ 40 KBtu/hr with 17% excess air and a preheat air temperature of ~ 1000°F. These conditions are in excess of the design operating values of 15% excess air and 800°F air preheat temperature. These five engine runs have verified meeting the low pressure drop goal of 1.0 inch H_2O at design conditions.

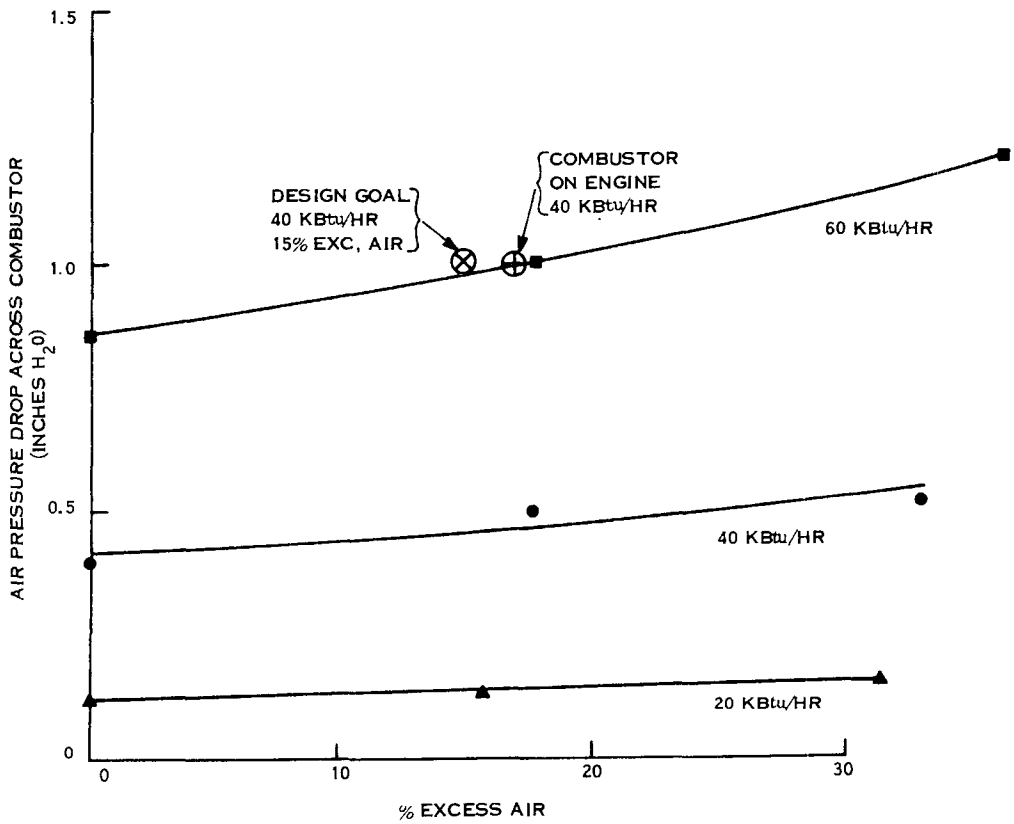

Figure 3-5. Pressure Drop as a Function of Excess Air and Firing Rate

3.2.3.5 Exhaust Emissions

The maintenance of the low levels of emissions attained by the previous combustor was accomplished and actually improved upon with the Prototype 1 combustor. The goal established for carbon monoxide emissions is 0.04% at the firing rate of 40 KBtu/hr with 15% excess air. The level of emissions, in particular CO, is directly related to the quality of air-gas mixing. Therefore, when the first Prototype 1 unit exceeded the goal, the unit was modified to increase air-gas mixing turbulence by decreasing the mixing gap. These changes brought down CO emissions but increased the pressure drop. Subsequent testing on the second Prototype 1 unit revealed poor air flow through the preheater into the mixing area as the cause of the problem. The alleviation of this, along with slight modifications to the mixing configuration reduced the level of CO emission below the design goal.

The measured CO emissions at various firing rates and excess air levels are shown in Figure 3-6. The actual emissions levels of the combustor are equal to or less than these measured values when integrated with the Stirling engine. Testing conducted to date indicates CO emissions less than 0.02% for the 20 to 40 KBtu/hr firing rates at or over 15% excess air.

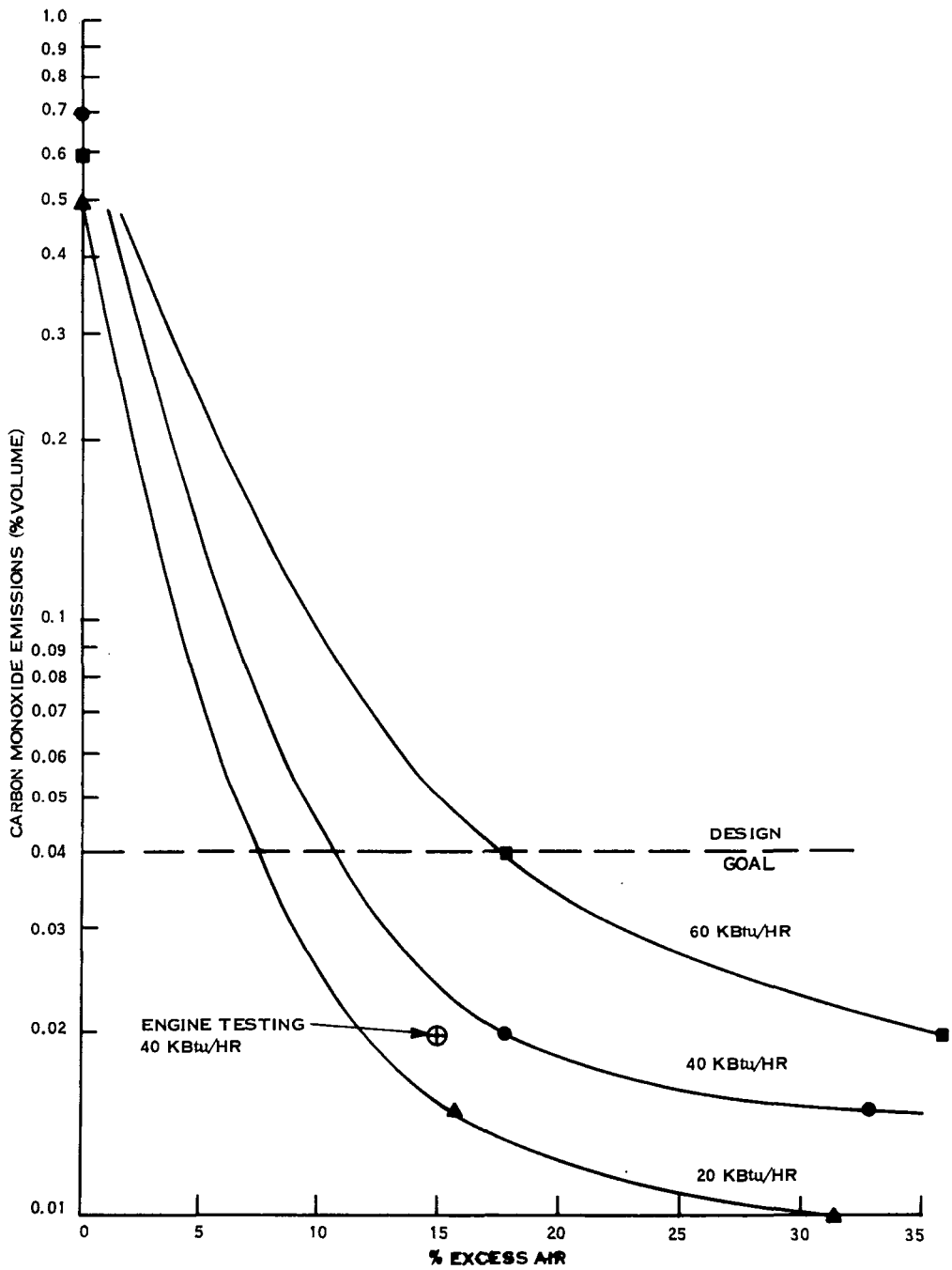

Figure 3-6. CO Emissions

3.2.4 ADVANCED COMBUSTOR

The development test program conducted on the Prototype 1 Combustor has identified several desirable modifications to the hardware. During this period several other modifications were determined to be of possible benefit to combustor performance. In order to evaluate these ideas prior th the design of Prototype 2, an advanced combustor design was initiated. This design incorporates several of the modifications arrived at in Prototype 1 testing and utilizes a Prototype 1 preheater assembly while making changes in the following areas:

1. Preheater Inlet Manifold. The inlet to the manifold was changed from a tangential to a radial inlet with directing vane to produce tangential flow in both directions. This reduces the manifold length in half and in conjunction with an increase in the cross-sectional area should reduce pressure variation to a minimum. These pressure variations are the cause of poor flow distribution through the preheater producing reduced effectiveness and also poor air-fuel mixing.

2. Preheater exit manifold (exhaust side). The exit of this manifold was increased in size while the cross-sectional area of the manifold was also increased. Both of these changes will minimize the flow variations that are always present in this unrestricted (free) inlet type manifold-matrix configuration.

3. Penetration Fitting. The design of the penetration fittings for the flame detector igniter and view port were changed to obtain better control of the air-fuel mixing gap and a more positive acting seal in this area.

4. Burner Support. The support hardware was changed to allow insertion and fastening of the burner in position without removal of the rear heat shield. In addition, this method will be adaptable to a ceramic burner.

These changes, as well as several others, will be evaluated for use in the Prototype 2 Combustor design.

3.2.5 CERAMIC BURNER DEVELOPMENT

As a part of the effort to minimize product cost, development of a ceramic burner frit was initiated during this reporting period.

Based on technology developed for a ceramic regenerator for gas turbine application, development of a ceramic, radiation cooled, transpiration burner was initiated. The material is a

combination of Lithium Aluminum Silicate and Magnesium Aluminum Silicate (trade-named GE 3200). This material has demonstrated excellent resistance to thermal shock, sulfur corrosion and can be operated up to 1200°C (2200°F).

The ceramic frit was made from spherical particles of about 0.035-inch diameter as a means of achieving the desired uniform porosity and structure integrity. Several sintering techniques were attempted including coating with different material and employing graphite molds. The latter technique was successful in producing two frits for test, one of which is shown in Figure 3-7. The frit has an I. D. of 2.62-inches and 0.25-inch wall thickness. The test results showed that a ceramic frit can be operated up to 800°F preheat air temperature without thermal shock and flame flash-back problems. The pressure drop was about twice that of the metal frit currently used in the Prototype 1 engine.

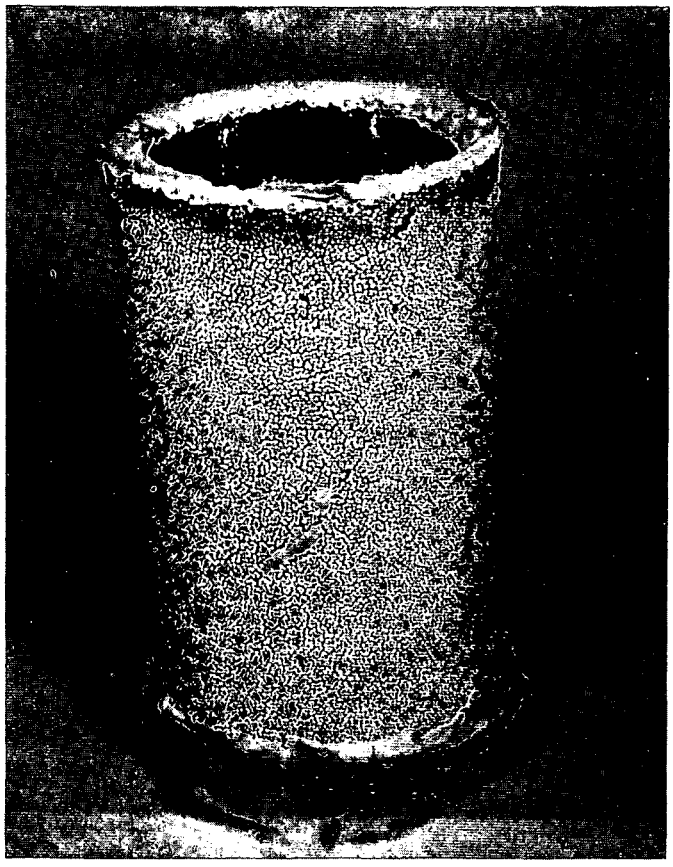

Figure 3-7. Developmental Ceramic Burner

3.3 COMPRESSOR DEVELOPMENT

3.3.1 SUMMARY

The development program for an inertia compressor continued with the fabrication and test of the Prototype 1 Unit. This compressor, designed to mate with the Prototype 1 free piston Stirling engine (FPSE), incorporated many design features successfully demonstrated and/or identified to be desirable during the Engineering Research Compressor (ERC) test program (reported in previous semi-annual reports).

Within this reporting period Prototype 1 compressor detail drawings were completed and issued, component parts were fabricated/procured, unit assembly was completed and performance testing was started. An assembly drawing of the compressor is presented in Figure 3-8. Also, photographs of compressor components are presented in Figures 3-9 through 3-12, showing a cylinder assembly, cylinder head assembly, mid-housing, and piston, respectively, along with a complete Prototype 1 assembly in Figure 3-13. It is noted that specific attention was given to the housing designs, where welded construction was used to simulate future casting designs. A discussion of additional design features and test results to date are presented in the following paragraphs.

3.3.2 COMPRESSOR DESIGN FEATURES

The major design differences between the ERC and the Prototype 1 compressor are:

1. Cap screws are used for housing and cylinder head assembly in place of full length tie rods. This change facilitates unit assembly and disassembly in addition to reducing unit weight.

2. The "start-up" check valve was incorporated into the mid-housing to eliminate tubing, external fittings and the possibility of leaking joints.

3. The upper and lower cylinder suction cavities were interconnected by an internal passage to eliminate an external line, fittings and leaking joints.

4. The required gas spring volumes were provided by internal cavities in the housing in lieu of external lines, fittings and leaking joints.

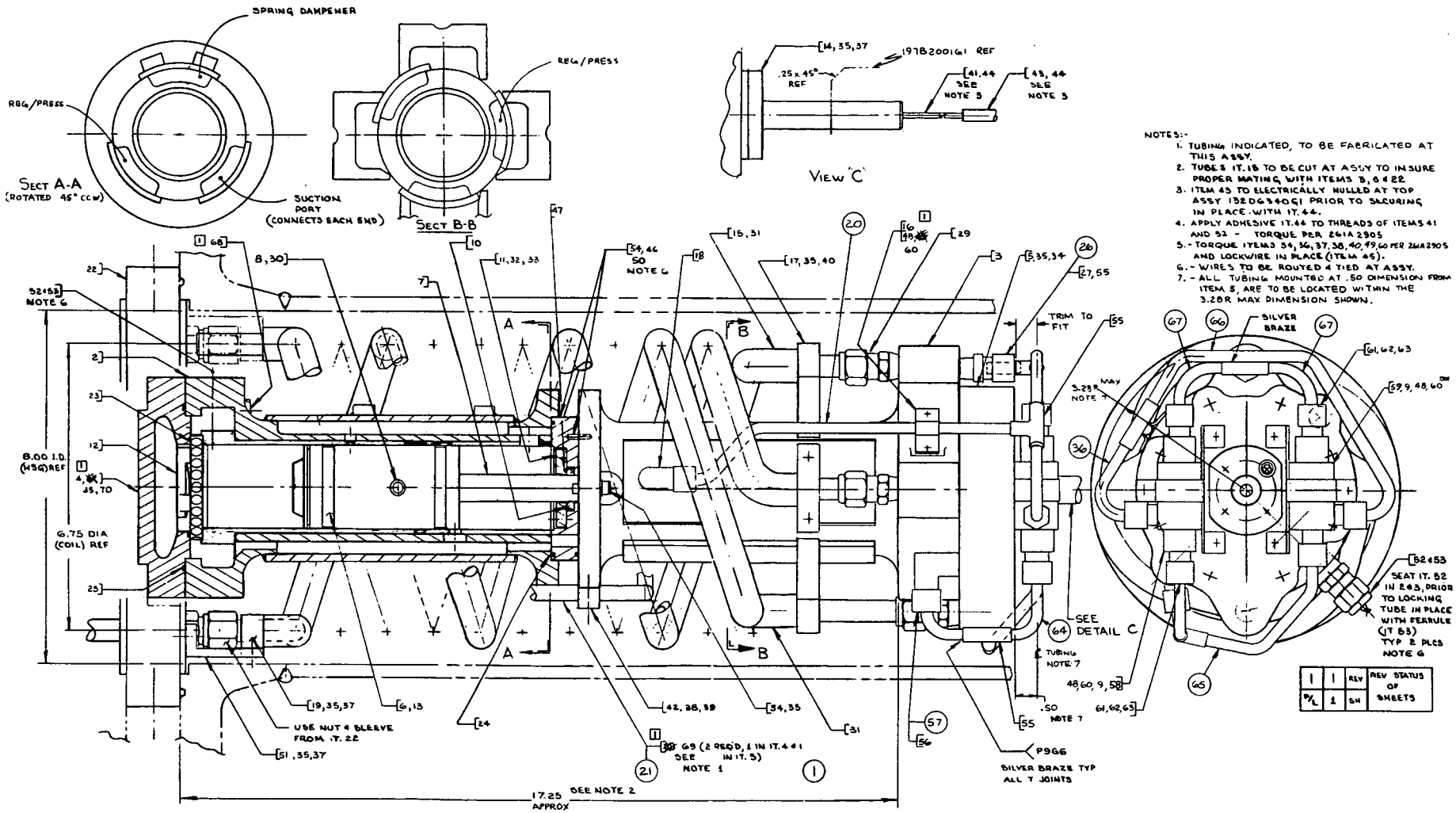

Figure 3-8. Prototype 1 Compressor Assembly

Figure 3-9. Prototype 1 Compressor Cylinder Assembly

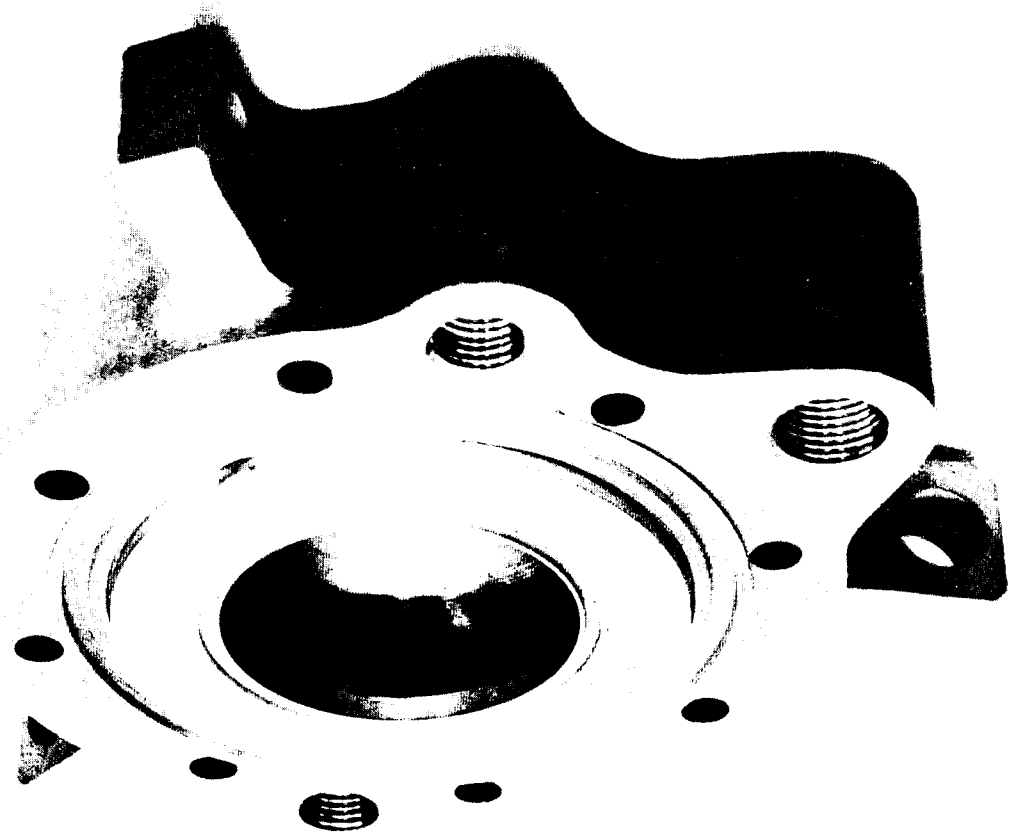

Figure 3-10. Prototype 1 Compressor Cylinder Head Assembly

Figure 3-11. Prototype 1 Compressor Mid-Housing Assembly

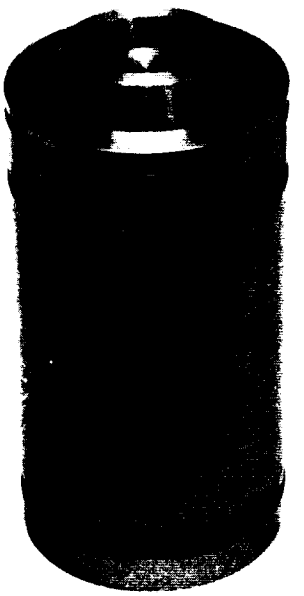

Figure 3-12. Prototype 1 Compressor Piston

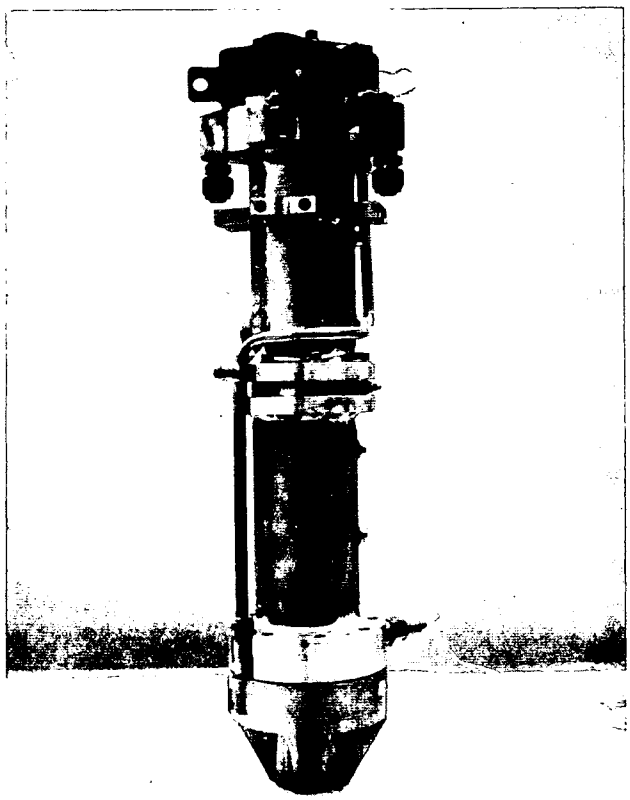

Figure 3-13. Assembled Prototype 1 Compressor

5. The lower cylinder head was configured to mate with the compressor-to-FPSE piston adapter.

6. The compressor piston pin location was changed in the piston to provide added strength to the piston skirt in the vicinity of the pin hole.

7. Provisions were made for installing the tubular coil refrigerant feed tubes that are required when the compressor is mated to the FPSE.

8. Pressure regulator and relief valve designs were completed and provisions were made for installation on the compressor.

3.3.3 COMPRESSOR

3.3.3.1 Operation Analysis

A substantial analytical effort to understand the engine compressor interaction through a parametric sensitivity study has been reported in the last semi-annual report. This study pointed

out a need for the fine tuning of the engine/compressor design which was carried out under the effort of the Advanced Development task during this reporting period. In order to maintain a stable operation of the engine/compressor and achieve high performance throughout all operating ambient temperatures, it was found necessary to regulate pressure in the compressor gas springs.

Previously the Prototype 1 compressor design called for a gas-spring referenced to the refrigerant suction line pressure. Due to the changes in the suction pressure at different ambient temperature (T_{amb}), the natural frequency of the compressor piston also varies as shown by the solid plot in Figure 3-14. As a result the operating characteristics vary widely at different operating modes. Figure 3-15 illustrates this phenomena by plotting the typical engine operating frequency and the engine piston stroke at different ambient temperatures for a given engine/compressor design. During the cooling mode ($T_{amb} > 70^{o}F$), the engine operates at the first harmonic of the engine/compressor 3-mass system. As T_{amb} drops below $20^{o}F$, the second harmonic dominates and the engine operates at a higher frequency. Between $20^{o}F < T_{amb} < 70^{o}F$, engine operation becomes somewhat erratic in the sense that it switches between the first and second harmonics as the operating cycles proceed. Therefore, the engine performance during this "hunting" zone cannot be accurately controlled. In addition, Figure 3-15 illustrates that the engine piston stroke between $20^{o}F < T_{amb} < 30^{o}F$ at the second harmonic could exceed the allowable limit of the engine design (2.28 in. for Prototype 1) and result in a severe mechanical collision.

The most satisfactory approach to correcting the "hunting" operation is to employ a pressure regulator to maintain a relatively constant pressure in the compressor gas-spring instead of a direct reference to the freon suction pressure. With the gas-spring pressure regulated, the range of variation of the compressor natural frequency can be reduced substantially as illustrated in the dashed line in Figure 3-14. Consequently the engine/compressor system will operate at the first harmonic across the entire ambient temperature range of interest.

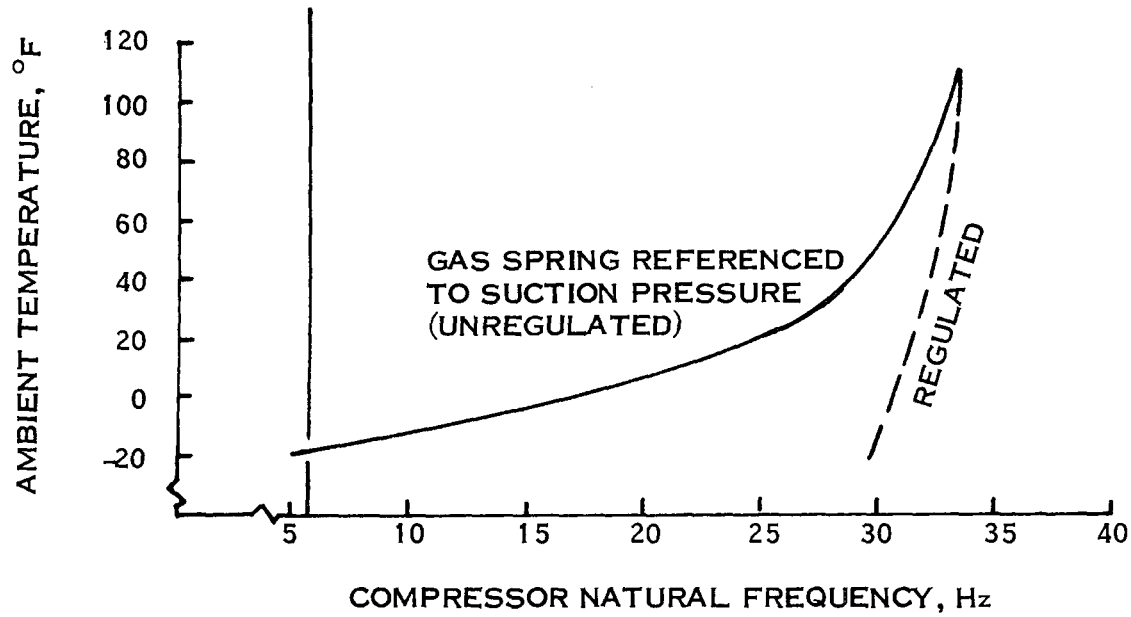

Figure 3-14. Compressor Natural Frequency as a Function of Ambient Temperature

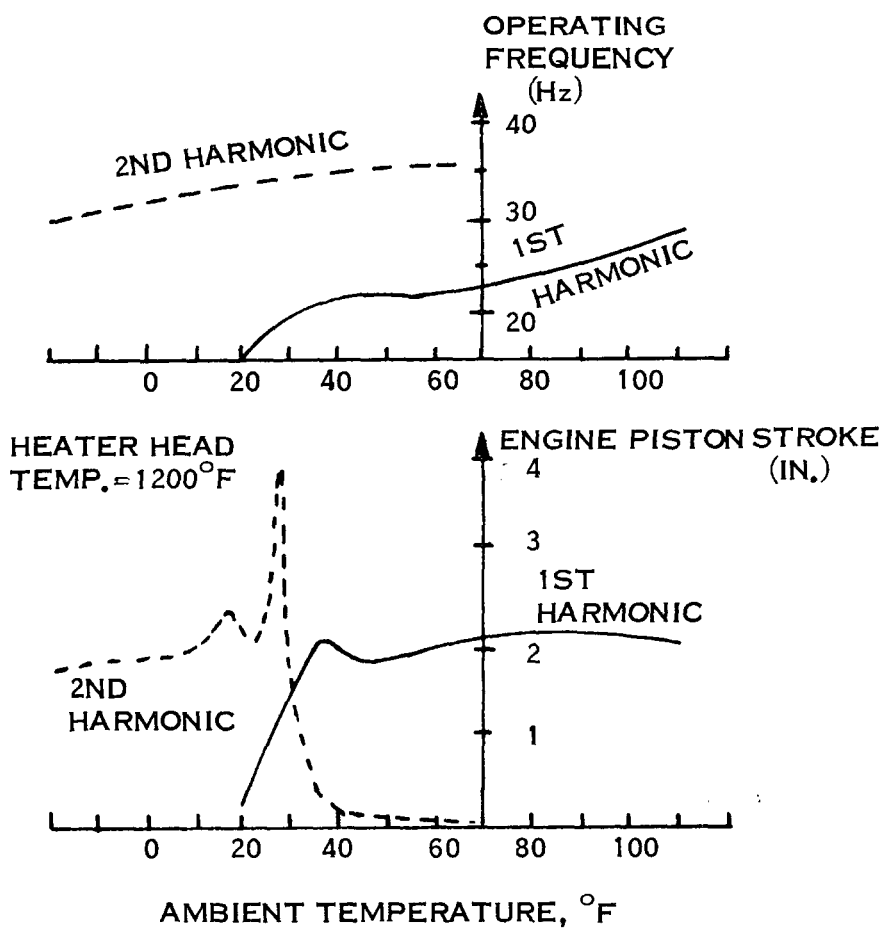

Figure 3-15. Engine/Compressor Operating Modes (Unregulated)

3.3.3.2 Pressure Regulator Design

The pressure regulating equipment (regulator and relief valve) are connected to the regulated pressure cavity (soft gas spring volume behind piston) and to both the compressor suction and discharge cavities. Whenever the regulated cavity pressure level is greater than 85 $\pm$ 5 psig, such as on a 95°F day, the relief valve bleeds the excess gas to the suction manifold. Once that value is achieved, the regulator valve takes over on a demand basis and bleeds compressor discharge gas (high pressure) into a regulated volume to maintain the 85 $\pm$ 5 psig level. On a cold day the regulator valve will do the required pressurization and then maintain that level.

For Phototype 1 the relief and regulator valves are contained in the accessory housings which are mounted atop the compressor's upper cylinder head. All plumbing is done externally. On future models the valves will be cartridge types and the valve bodies will be an integral part of the cylinder head, complete with an internal porting arrangement.

Figures 3-16 and 3-17 present sectional views of the regulator and the relief valve. Figure 3-18 illustrates the pressure regulation operating characteristics.

3.3.4 TEST RESULTS

3.3.4.1 Prototype 1 Compressor, Unit #1

Prototype 1, Unit #1, compressor was assembled without a regulator or relief valve in order to provide an operation bench-mark. Tests were conducted on this unit to establish preliminary performance characteristics. The unit demonstrated reliable start-up characteristics and good isentropic efficiency levels. Figure 3-19 is a bar chart comparison of the predicted versus actual test results of the compressor at test conditions of 1600 rpm and a 1-inch peak-to-peak excitation stroke.

Further testing of this unit was deferred in favor of testing Unit #2, which incorporated the pressure regulator and relief valves, previously described.

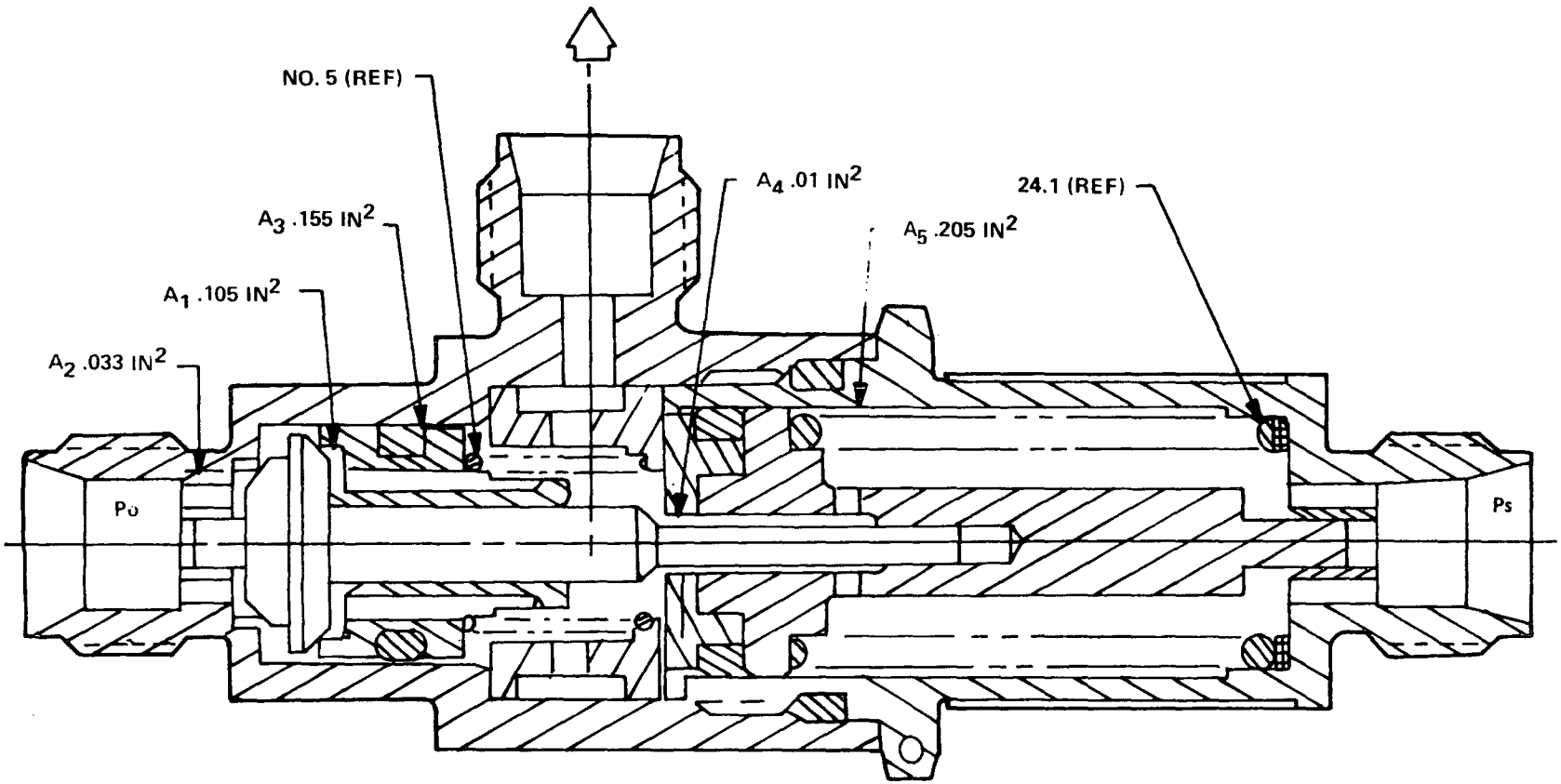

Figure 3-16. Prototype 1 Compressor Pressure Regulator Sectional View

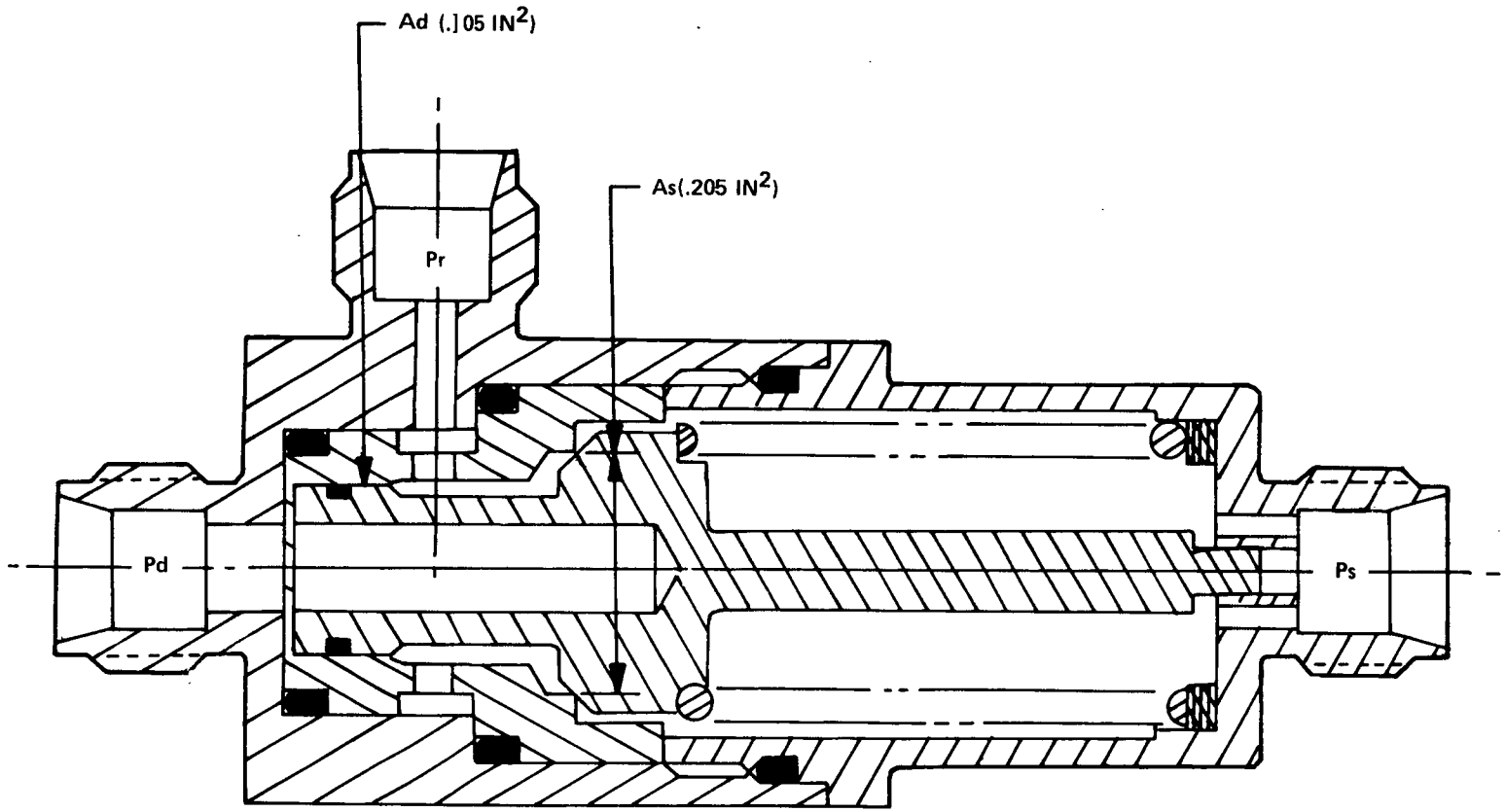

Figure 3-17. Prototype 1 Compressor - Relief Valve Sectional View

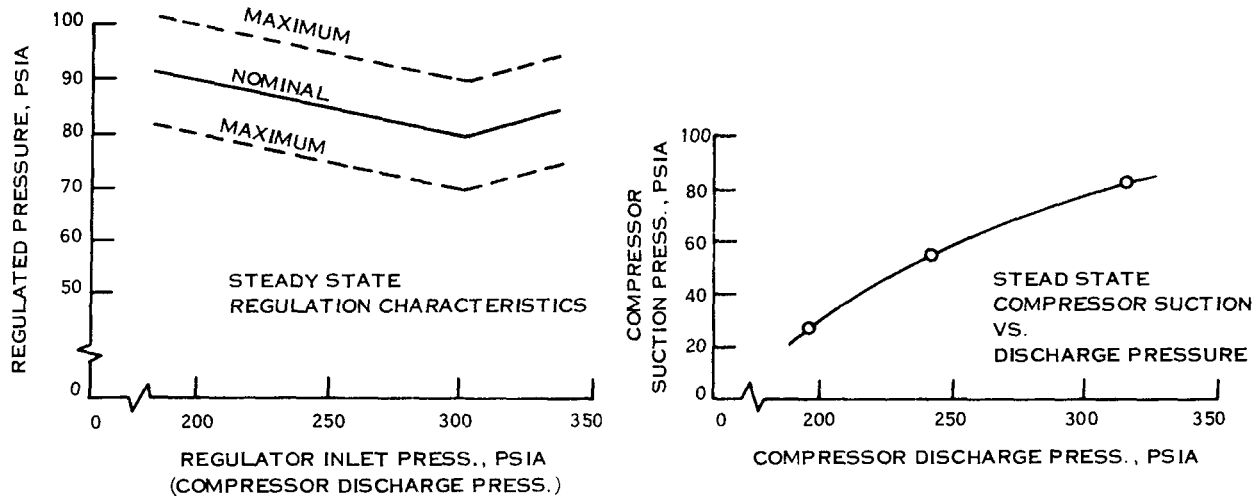

Figure 3-18. Pressure Reference Characteristics

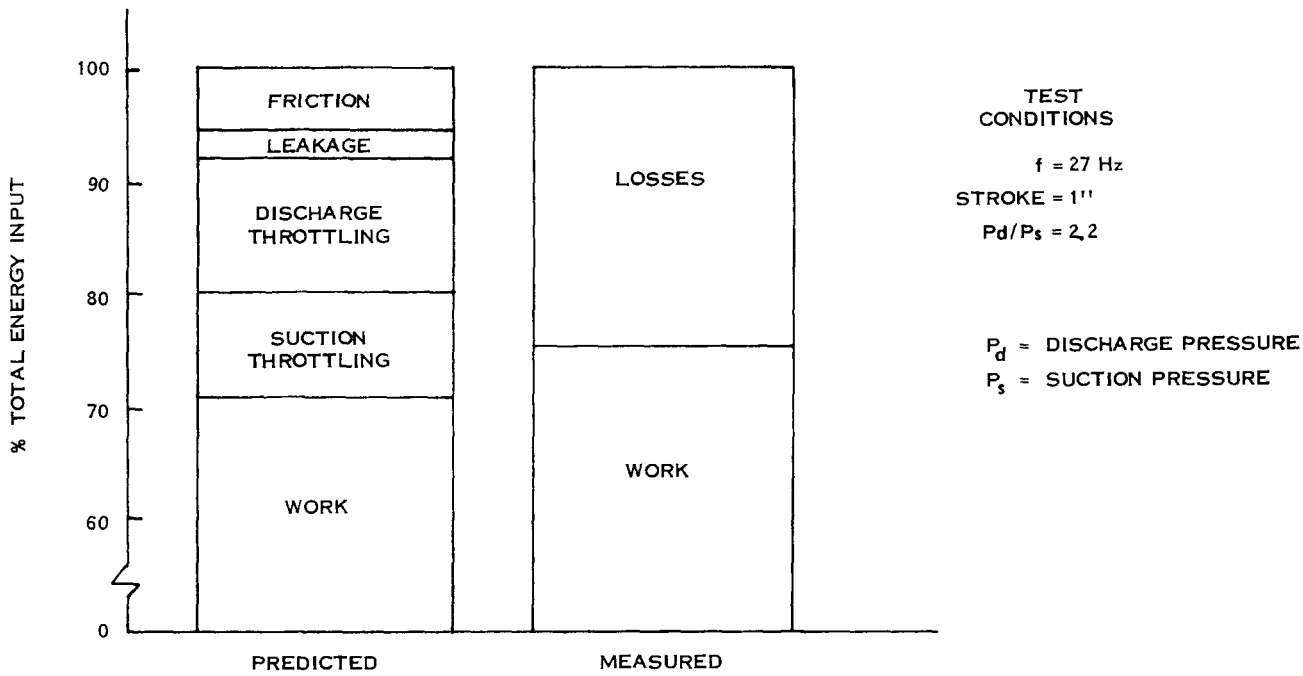

Figure 3-19. Prototype 1 Compressor Performance

3.3.4.2 Prototype 1 Compressor, Unit #2

Prototype 1, Unit #2, Compressor was assembled per the assembly drawing shown in Figure 3-8, including the regulator and relief valves and the interconnecting tubing. Figure 3-20 is a photograph of the assembled unit shown from the top to illustrate the regulation equipment mounting. The compressor assembly was installed in the test facility and the drive system was set-up for a 1-inch peak-to-peak excitation stroke.

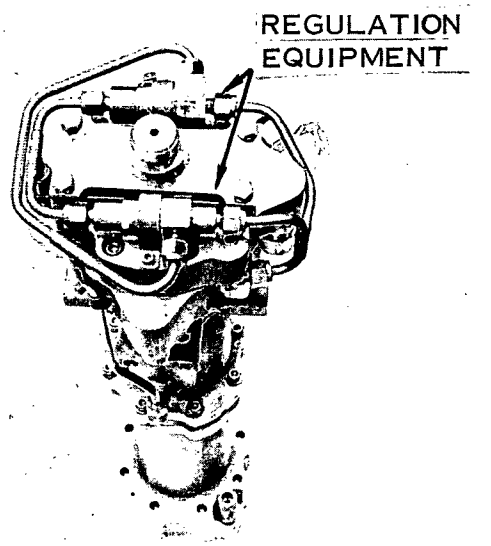

Figure 3-20. Prototype 1 Compressor Unit 2

A performance test was conducted at 1600 rpm. At these operating conditions, the compressor performance characteristics (including the regulator and relief valve performance) agreed favorably with predicted valve performance. Performance at increased compressor pressure ratios will be required to subject the compressor/regulator assembly to its design operating conditions.

A limited amount of testing was completed during this reporting interim at excitation conditions of 1600 rpm and a peak-to-peak stroke of 1.5 inches. Start-up characteristics were excellent and the gas spring pressure regulating system appeared to be functioning as designed. Data on the lower cylinder suction pressure indicated a higher than expected feed line pressure drop at high flow rates, and the compressor exhibited a tendency to drift into an asymmetric operating mode. This problem is being investigated; however, that performance in general was as good as or better than predicted.

3.3.4.3 Tubular Coil

When the Prototype 1 Compressor is mated to the FPSE, refrigerant is supplied to and delivered from the compressor by tubular spring coils (3 suction and 1 discharge). As applied,

these coils can be classified as "high duty springs" since they will be subjected to high loading stresses (approximately 60,000 psi maximum bending stress) for an essentially infinite number of cycles, therefore, metal fatigue is the major concern. A meeting was held at Lehigh University with established authorities in the field of metal fatigue. The discussion centered upon the acceptability of the chosen material - PH15-7Mo stainless steel and the overall design of the tubular coil. The coil design, its application, and the material properties were all reviewed in detail. The unanimous opinion of the experts was that the design was acceptable and the material selection was a good choice. Figure 3-21 shows the S-N curve for the spring material and the calculated design stresses.

To gain further confidence in the design and fabrication of the coils, a test was initiated to permit endurance test evaluation of a coil at its maximum required frequency and stroke (30 CPS and 1.75 inches, respectively). Figure 3-22 presents a photograph of the test facility with a coil installed. This coil was randomly selected from the first five finished units received from the supplier, and installed into the facility for endurance testing. During this reporting interim

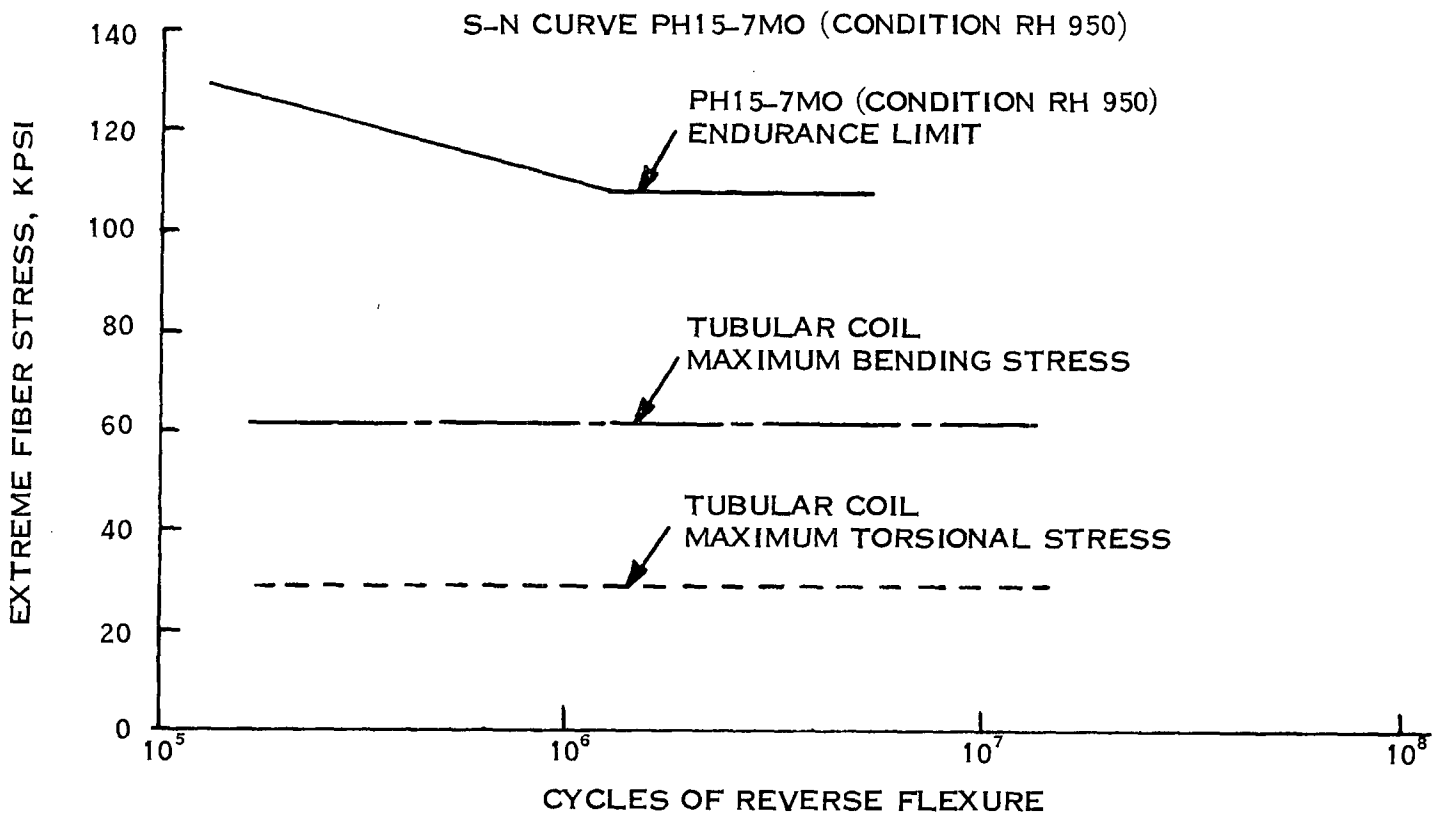

Figure 3-21. Spring Tube Design Stress Data

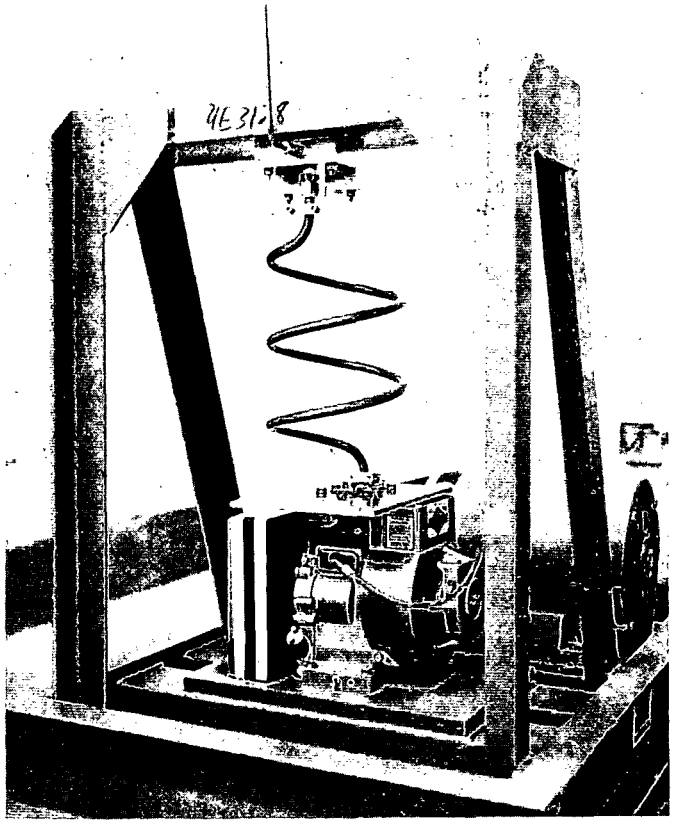

Figure 3-22. Tubular Spring Coil Endurance Test Facility

the coil has accumulated slightly over 30 million cycles, well beyond the knee of the S-N curve for the PH15-7Mo material. Testing continues.

3.4 STIRLING ENGINE DEVELOPMENT

3.4.1 SUMMARY

During the second half of 1977 the development of the Free Piston Stirling Engine (FPSE) progressed through the manufacturing, assembly, checkout testing and into the initiation of the engine performance evaluation phase. Three complete engine assemblies plus selected spare parts were fabricated. The initial unit has been successfully assembled, instrumented and integrated into the test facility. Checkout evaluation of the engine, facility and all instrument systems was completed. Performance testing was initiated during the latter portion of this reporting interim and will continue into the first quarter of 1978.

3.4.2 FABRICATION

Fabrication of all the FPSE components progressed through the manufacturing cycles per schedule. The critical path throughout the fabrication cycle was the engine housing assembly shown in Figure 3-23. This unit required a detailed sequential set of operations, including component machining, welding, assembly, brazing, final machining, nondestructive testing, etc. Once completed, 5-mil diameter wire regenerator matrix subassemblies were installed in the first unit only and the final welds completed. The engine housing was subsequently inspected, pressure proof tested at 1650 psig and then successfully leak checked. Photographs of the finished engine housing assembly are presented in Figures 3-24, 3-25 and 3-26.

The balance of the hardware was produced with the same attention to detail as the engine housing assemblies. Detail inspection reports for critical dimensions of all components were recorded and filed for assembly and test reference. Several representative finished components, including a liner, displacer, piston, adapter housing and carbon seal sleeve for the piston are shown in Figure 3-27.

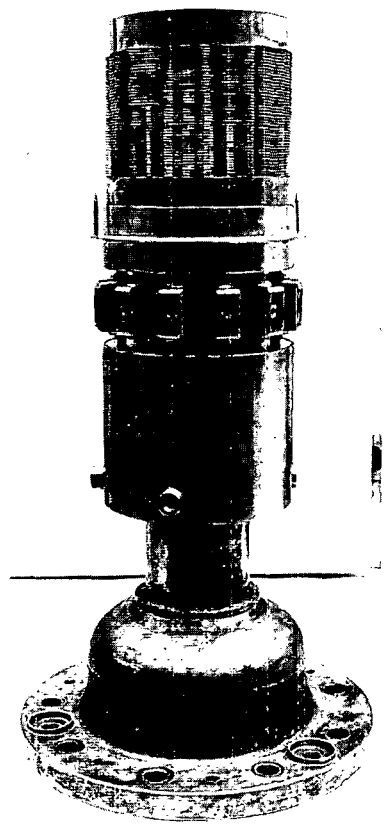

Figure 3-23. Engine Housing Assembly

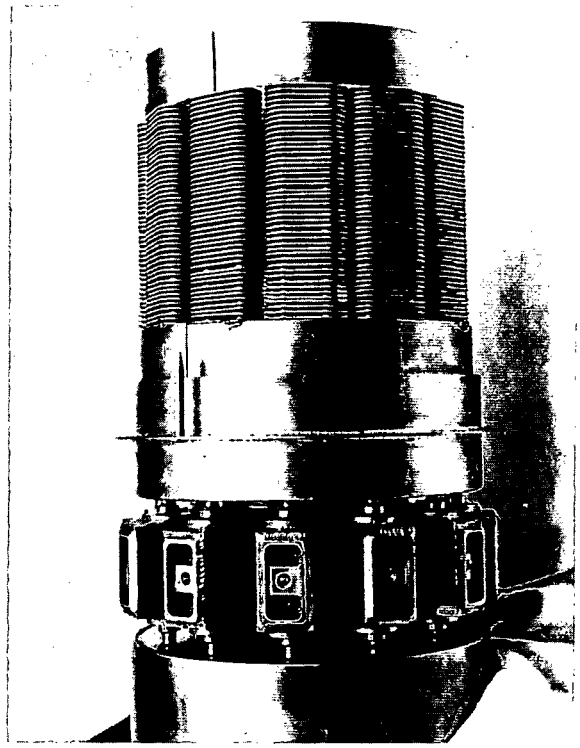

Figure 3-24. Heater Head/Regenerator Assembly

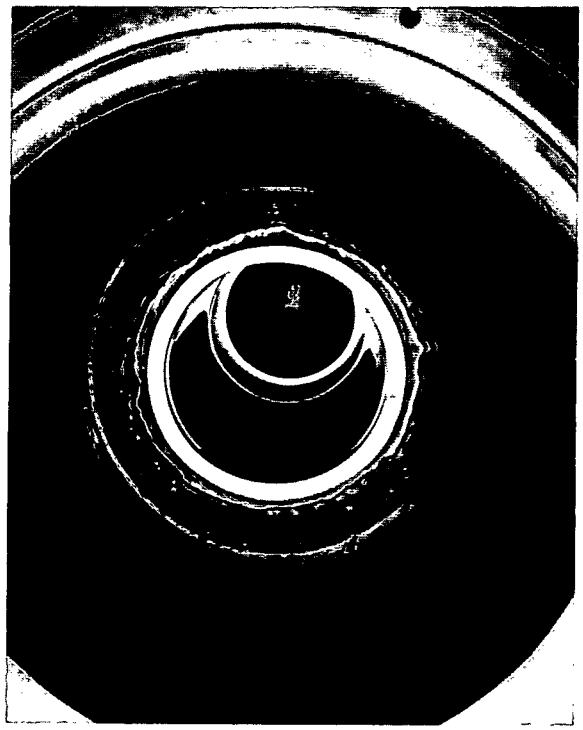

Figure 3-25. Engine Housing Internal Assembly

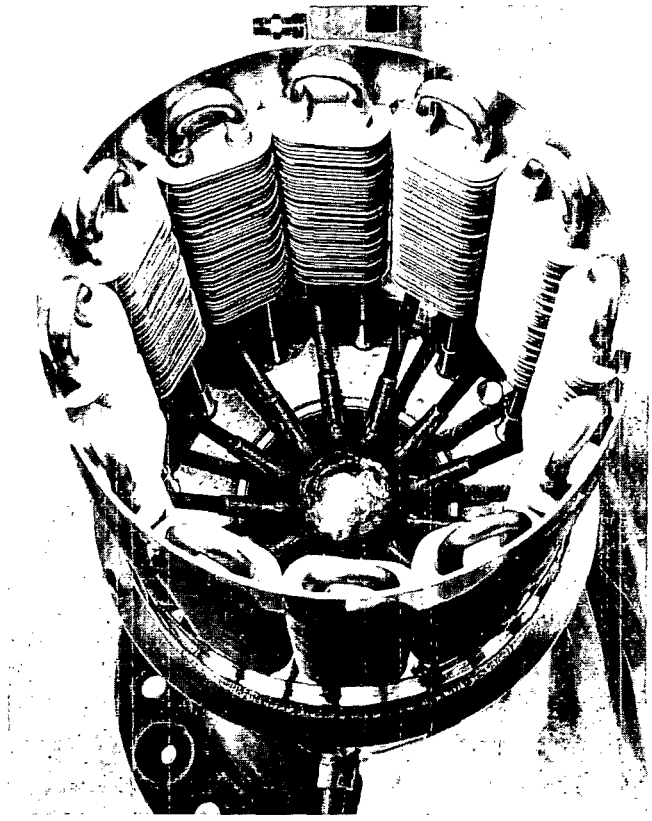

Figure 3-26. Finished Housing Assembly

3.4.3 ASSEMBLY AND FACILITY INTEGRATION

Assembly of the various components into an operable FPSE unit was successfully completed per schedule. The engine was fully instrumented to monitor temperatures, pressures, force and displacement measurements. Checkout testing and the initial performance mapping of the engine were planned with the engine output power being absorbed via a facility loading device - a double-ended, single-acting pneumatic cylinder. The assembly drawing for this configuration is presented in Figure 3-28. Figure 3-29 illustrates the assembled FPSE reciprocating subassemblies coupled to the engine load via the engine adapter housing.

The dynamic component subassembly was inserted into the engine housing assembly and the pressure vessel installed. This completed configuration was subsequently mounted in the test facility. The Prototype 1 combustor was installed and the various facility services and instrumentation interfaces were completed. The engine assembly was then evacuated and checked for leaks. Figure 3-30 illustrates the engine assembly mounted in the test facility.

a. Adapter Housing

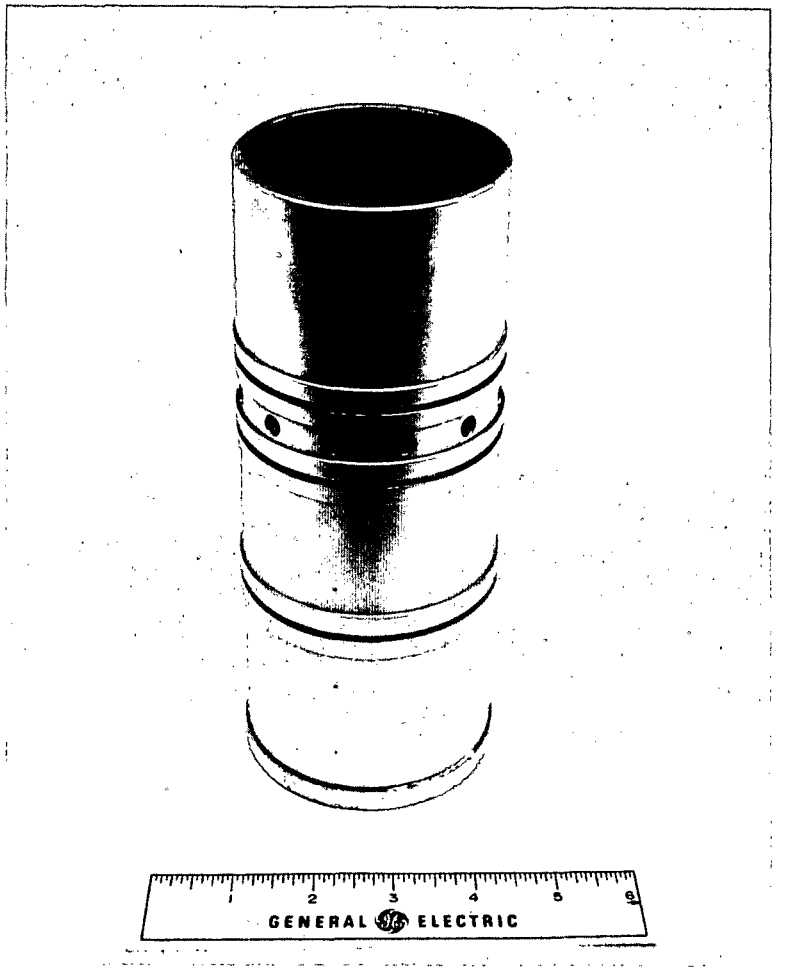

b. Liner

Figure 3-27. Finished Components for Piston

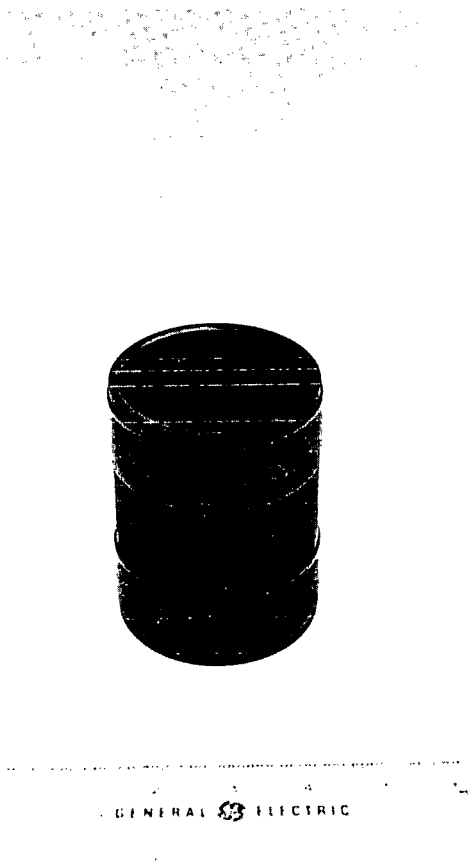

c. Carbon Seal Sleeve

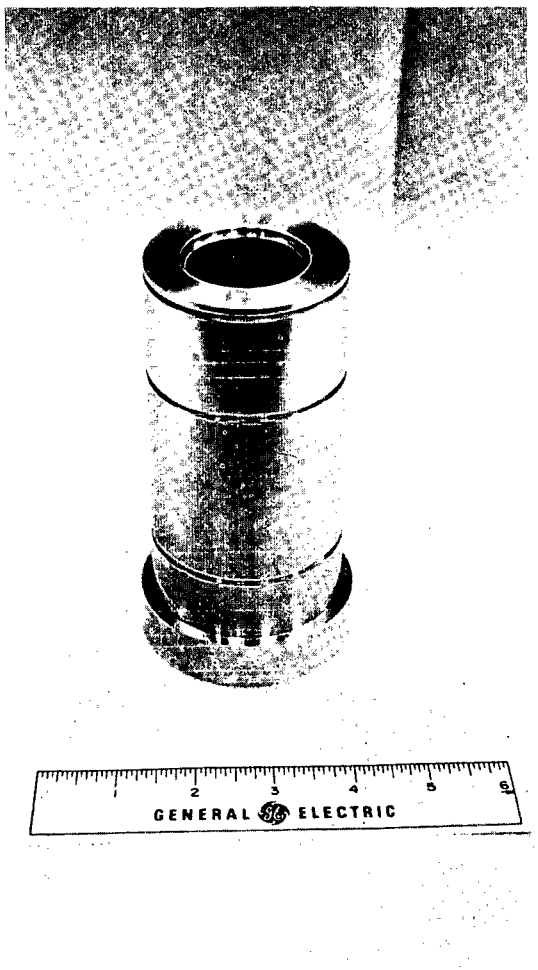

d. Power Piston

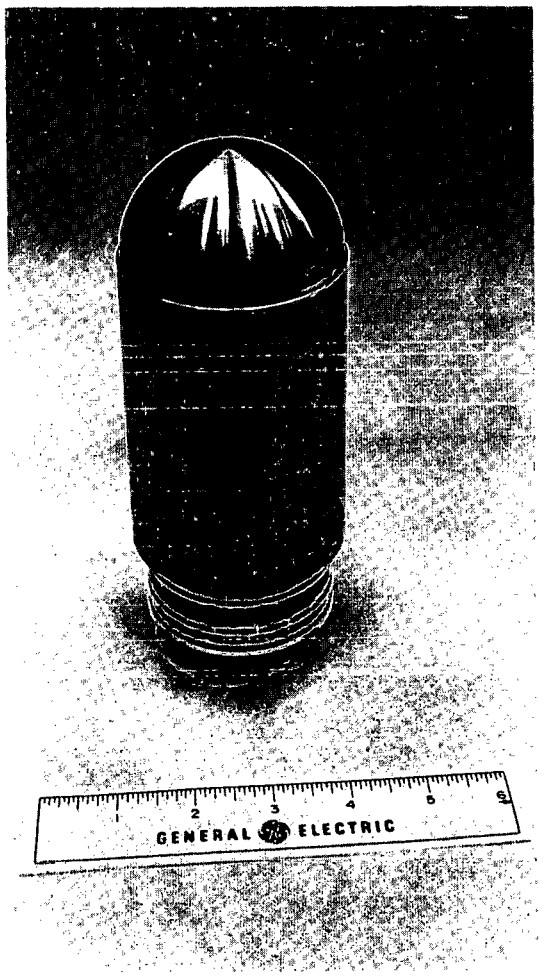

e. Displacer

Figure 3-27. Finished Components for Piston (Cont'd)

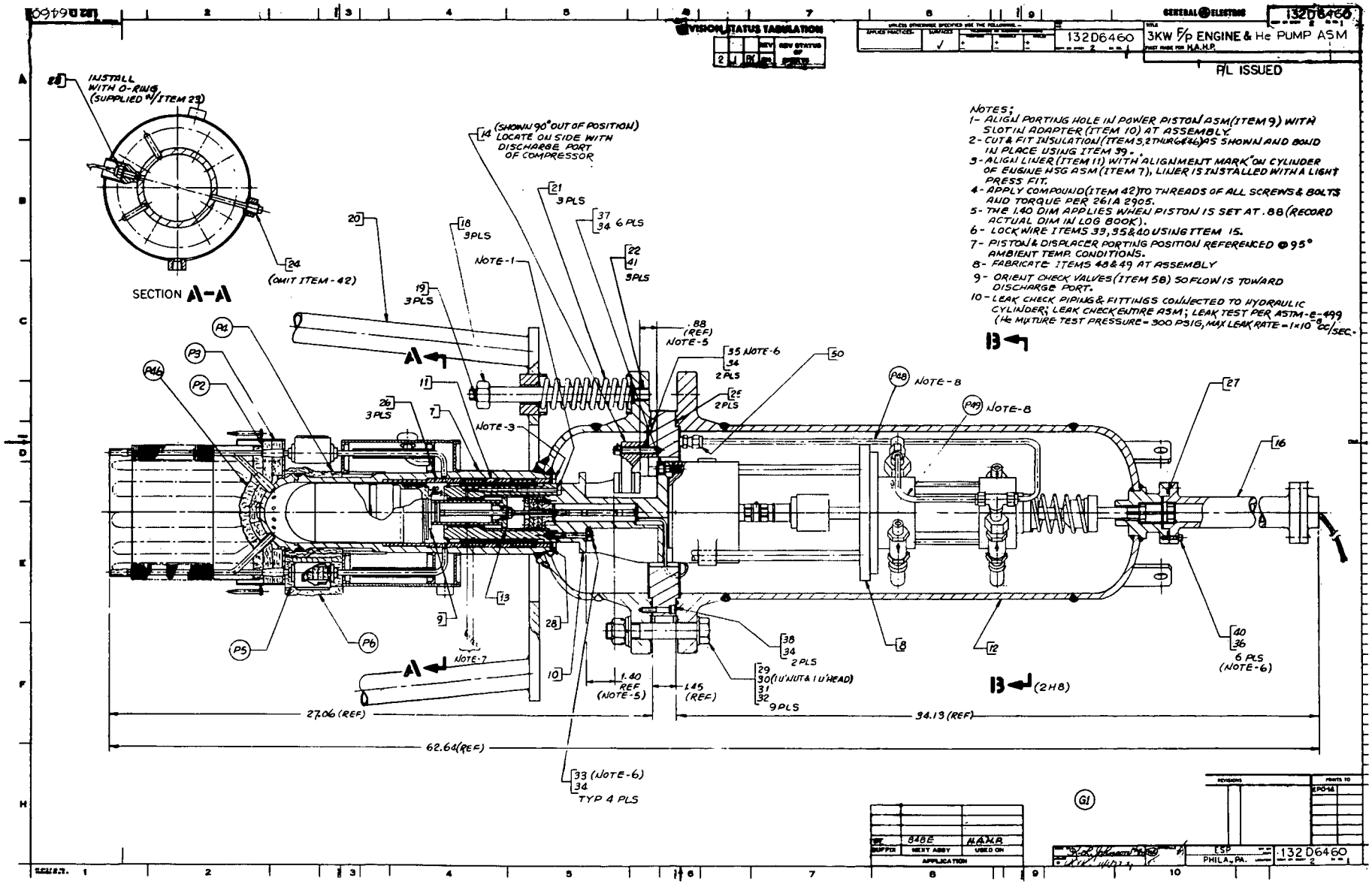

Figure 3-28. FPSE Assembly

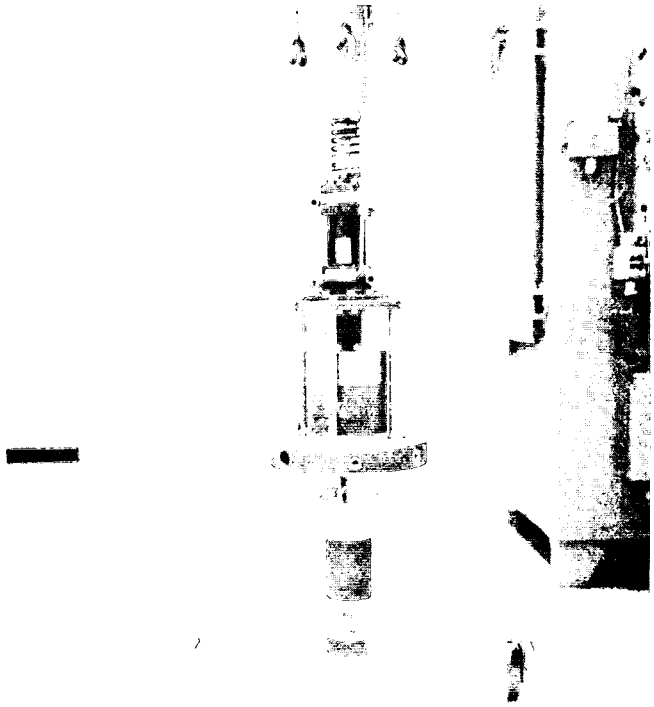

Figure 3-29. FPSE Subassemblies

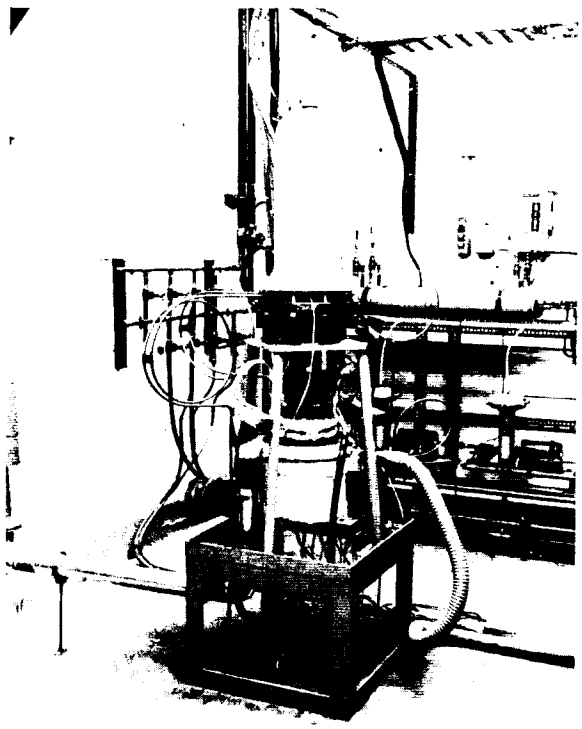

Figure 3-30. Engine Assembly in Test Facility

The engine facility controls, instrumentation consoles, safety circuitry and dynamic data acquisition and recording equipment are shown in Figure 3-31. This dynamic recording equipment is currently shared with the inertia compressor test stand and will also be shared with the system test facility once that phase of the program is initiated.

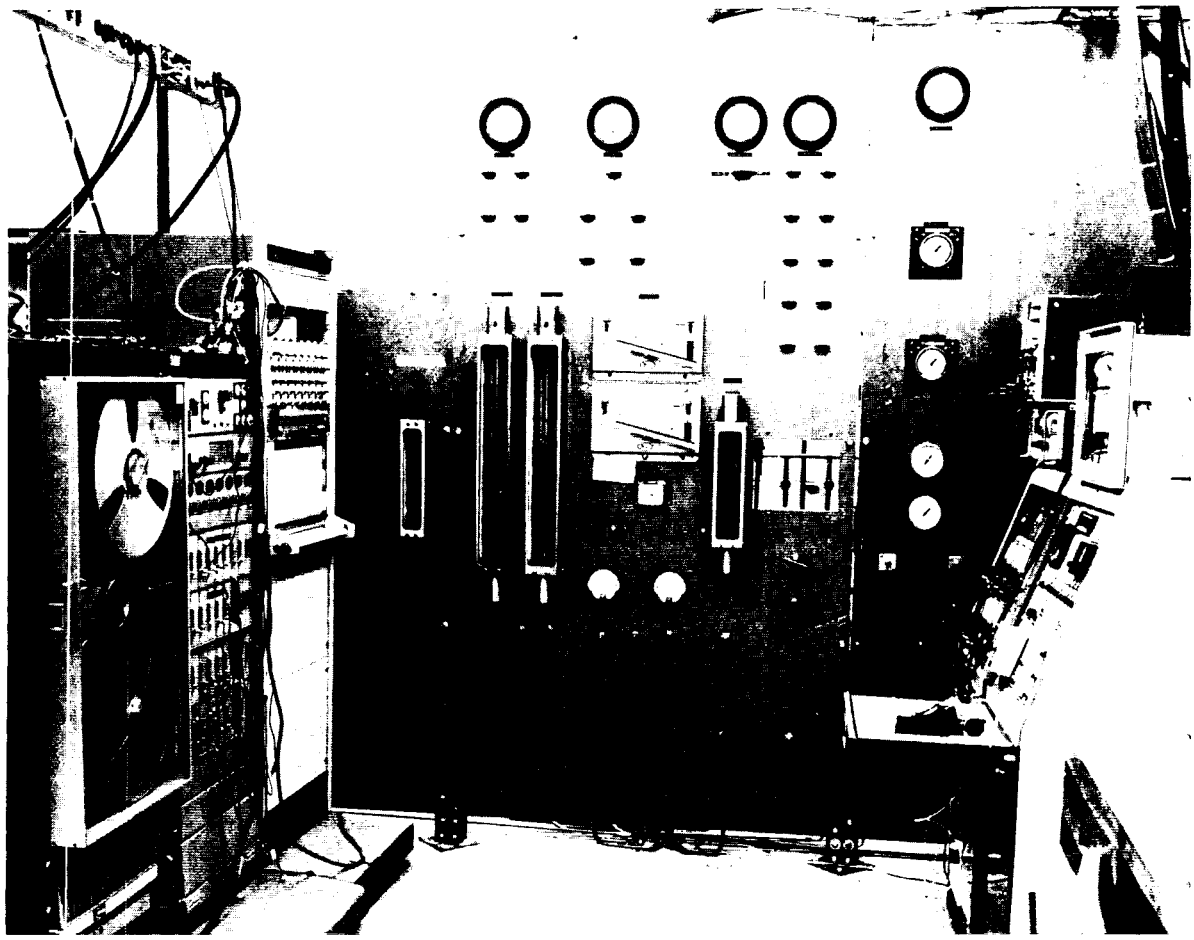

Figure 3-31. Controls, Instrumentation, Safety Circuitry, Data Acquisition and Recording Equipment

3.4.4 FREE PISTON STIRLING ENGINE TEST PLAN

A plan governing the development testing of the FPSE was written. A symposium of this plan is presented in Appendix A.

3.4.5 STARTING TECHNIQUE

A technique was developed for starting the FPSE employing the components delineated on the schematic shown in Figure 3-32. Basically, a tee connection was added to a port communicating directly into the FPSE working space or cold space volume. Both legs of the tee were

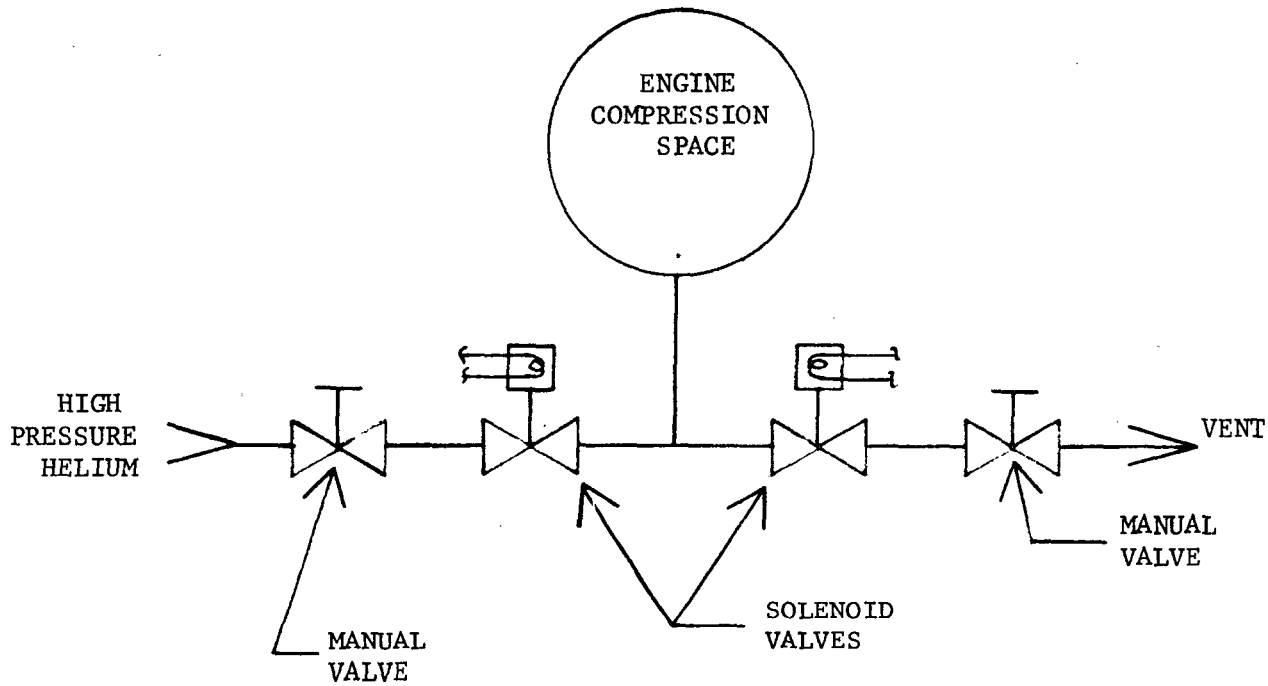

Figure 3-32. Test Engine Starting Mechanism

connected to high pressure manual valves and solenoid operated valves. One leg was allowed to vent to atmosphere while the opposite leg was connected to an independent source of high pressure helium gas.

During the startup cycle, after the heater head fin temperature reached a nominal 1200°F, the valving system was energized. High pressure helium gas was alternately introduced into the working space volume and then vented overboard. This pressure/vent sequence alternately reverses the ΔP across the displacer/piston combination relative to the bounce space charge pressure level. Once the components are excited, the displacer-to-piston motion is established which shuttles the gas through the heat exchangers. The temperature and resulting pressure differences are established and the engine becomes self-sustaining. Both manual valves are subsequently closed after the engine is running to isolate the engine environment from both high pressure and ambient conditions.

3.4.6 PREDICTED PERFORMANCE

By definition, the motions of the dynamic components of a free piston Stirling engine are constrained solely by the developed working fluid gas pressure forces. This constraint implies that the masses and the pressure force surface areas of the moving parts must be determined in such a fashion so as to produce the desired component strokes and phase angles. The Prototype 1 component weights and geometrics were designed so that 3 kW of power would be produced by a specified harmonic motion of the engine piston driving a free piston compressor housing - three (3) mass systems. An analytical study of the predicted engine and compressor dynamics has shown that, as with all free piston machinery, the component action is highly sensitive to the load pressure-force characteristics. Previous matching analysis has shown that a wide variation in engine performance can be expected for small changes in the compressor discharge and suction pressures.

In order to investigate engine performance separately from the free piston compressor, a simple double-cylinder, single-acting helium pump load was designed to accept the developed engine power. This approach, however, does not decouple the engine operation from the load characteristics. It merely reduces the analytical focus from a three free-body to a two free-body problem. The engine/load models shown in Figure 3-33 schematically illustrate the differences between the features of the free piston compressor and the helium pump load mechanisms.

Because of the coupling effects between the free piston Stirling engine and the load, significant operational differences were anticipated for the two-body test data as compared with the performance predictions for the coupled three-body design. One such basic difference is in the starting capability of the engine. Due to the increased dynamic stability of a two free-body machine, the potential for self starting is greatly diminished. A force balance calculation has shown that, in order to implement a successful start sequence, a larger displacer rod area than is optimum for the three body configuration, is required.

Another performance limitation imposed by the two free-body assembly is that there exists a critical compression ratio at which the entire system becomes over damped. Figure 3-34 illustrates the predicted engine piston strokes for a range of load compression ratios.

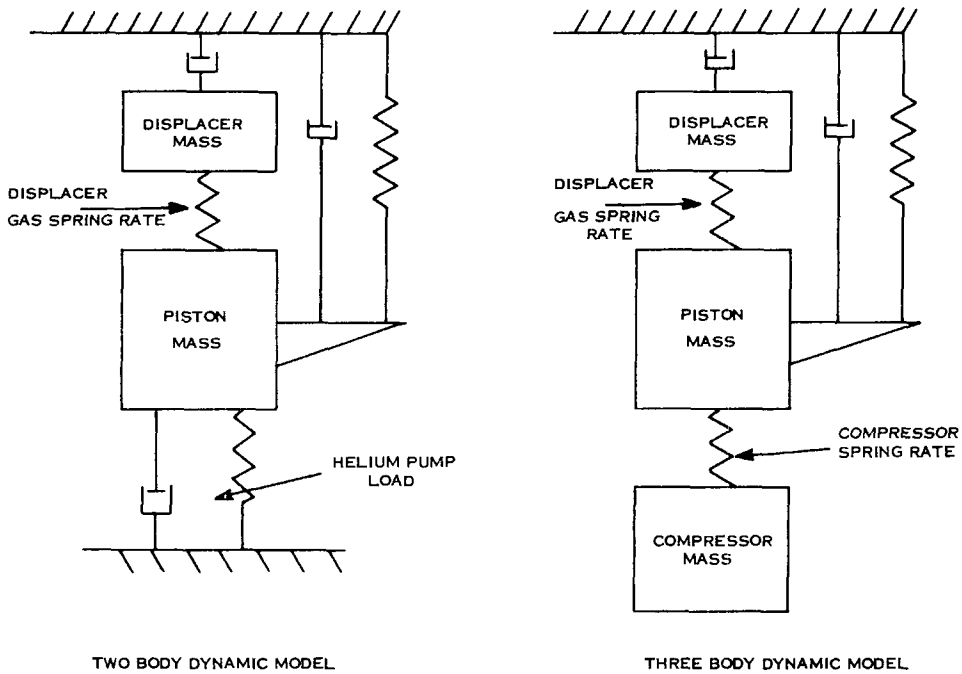

Figure 3-33. Free Piston Dynamic Model Comparison

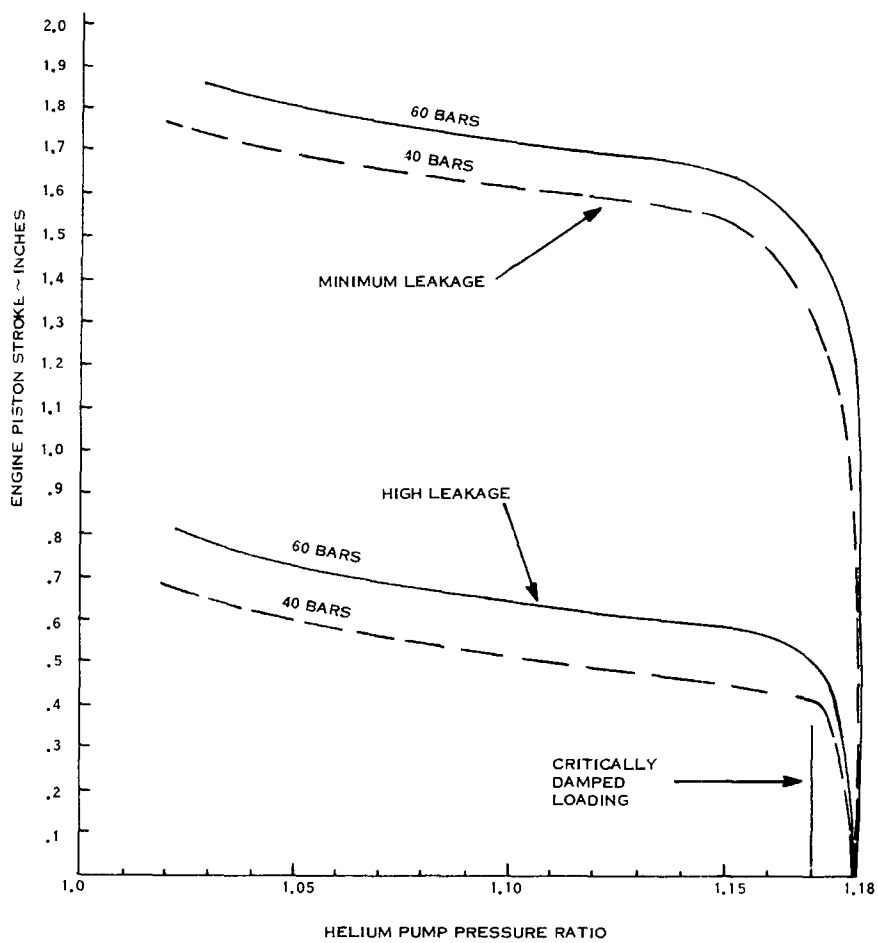

Figure 3-34. Engine Load Sensitivity

Regardless of either the charge pressure or the piston leakage rate, a common stall characteristic is indicated at the critical compression ratio. This implies that at a given charge pressure, there exists a theoretical limit to the level of power that can be developed by the engine and absorbed in the helium pump. Even at the minimum piston leakage condition, the maximum power that can be developed with the helium pump load is between 1.5 to 2.0 kW. At this reduced power capability, predictions show that the Prototype 1 engine cycle efficiency becomes much more sensitive to seal clearances, regenerator pressure drop, thermal leakage, and frictional effects. By taking these effects into account, the dynamic performance in terms of component motion, phase angle, and frequency can be predicted. Figure 3-35 shows a comparison between the predicted and the measured component dynamics.

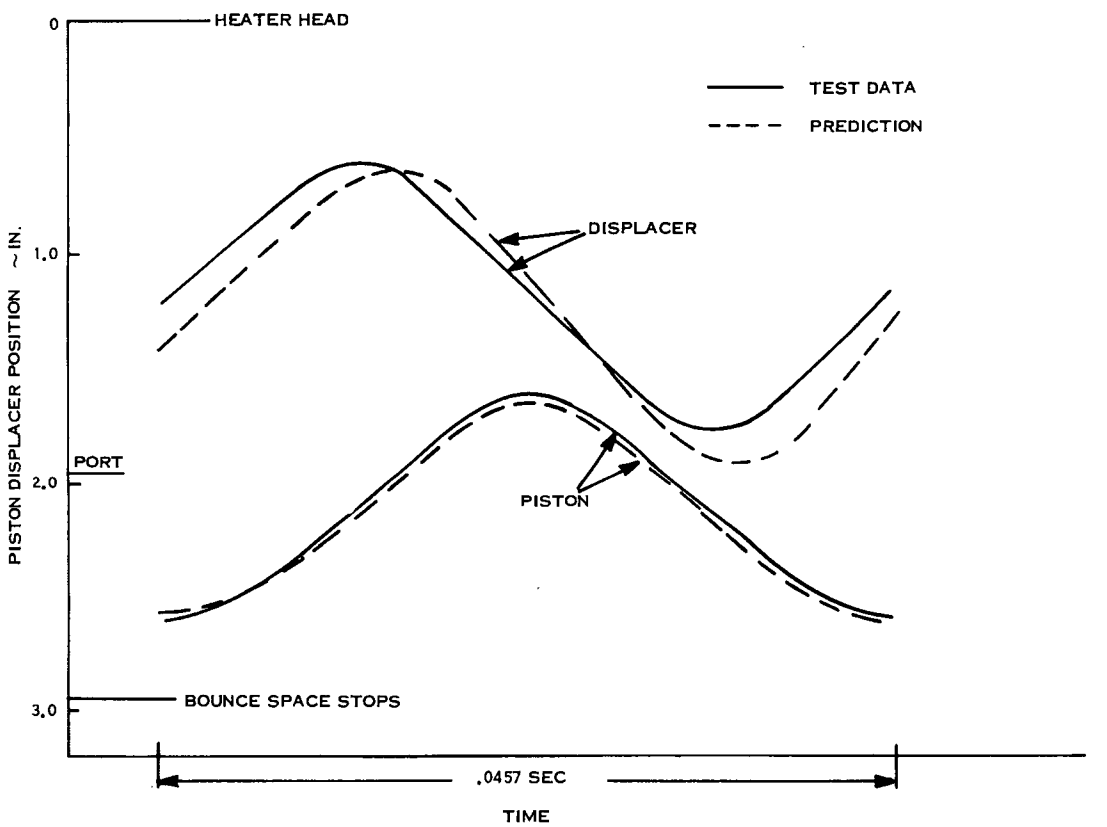

Figure 3-35. Prototype 1, Unit 1, FPSE/Pneumatic Load Dynamic Performance

The free piston Stirling engine (FPSE) testing has accumulated 6 hours and 15 minutes of operation during this reporting period. The bulk of engine operation occurred in December

and was logged over eight days with multiple start/stop cycles. Released energy input levels of 20K, 30K and 40K Btu/hr were established while the engine charge pressure level was adjusted between 40 and 60 bars.

At the higher charge pressure levels, two phenomena have been observed each of which contribute to the limited power output levels and occasional stalling of the engine in the two mass system. First, as the pressure ratio is increased across the helium load pump, the unit tends to become critically damped. This results in a reduction in the piston stroke as shown in Figure 3-34. Also, it appears that the displacer/piston gas spring is too stiff. The displacer motion is therefore limited. This in turn shuttles less gas through the heat exchanger thereby reducing the gas pressure forces acting on the piston assembly. A revised design was completed, based upon the projected proper size displacer rod area. The fabrication of this hardware is currently underway with delivery expected in early 1978.

Performance degradation as a function of time at identical operating conditions was observed. The engine was subsequently disassembled, and inspection revealed that the carbon bearing and seal sleeves had experienced excessive wear. A change in the diametral values of up to 2 and 5 mils were measured on the bearing sleeve and displacer seal ring, respectively. This additional clearance increased the leakage and, therefore, reduced the output power levels to only a third of the predicted values. Refitting with tighter tolerance sleeves resulted in recovery of initial performance levels. As a result, various approaches to a more positive seal, e.g., a "piston ring," are being explored. Reworked hardware capable of accepting revised configurations is expected to be acquired early in 1978.

3.4.7 ALTERNATE REGENERATOR CONFIGURATION

An analysis was conducted to evaluate improvement in engine performance as a function of regenerator characteristics. The results indicated an overall gain in engine efficiency of 2-3 percent if the regenerator matrices were both densified and fabricated of smaller cross-section materials. To this end, the matrix parameters were altered reflecting a change from 5 mils to 3 mil diameter wire and a porosity difference from a nominal 80% to 70%. The new generator matrices were fabricated and delivered during the fourth quarter of this

year. These 3 mil diameter wire matrices were subsequently installed in both the second and third engine housing assemblies. Engine #1 currently incorporates the 5 mil wire regenerators. As engine testing proceeds to unit #2 a comparison of regenerator performance will be possible.

3.5 AIR HANDLER DEVELOPMENT

3.5.1 SUMMARY

Both the indoor and outdoor air handlers had been assembled during the prior reporting period. The air handlers including all applicable controls were installed in a Psychrometric test facility and operationally checked out. The outdoor air handler then underwent a test sequence for stabilizing operation in the heating mode, and finally optimizing system performance. The parametric testing, described in the test plan, was completed successfully, and all test plan goals were realized.

3.5.2 TEST PLAN

A test plan was prepared describing the test objectives, applicable documents, a description of the test units and test facilities, required instrumentation, heat preparation guidelines, test plans for various operating modes, and sample data format. A synopsis of the test plan is provided in Appendix B.

3.5.3 TEST FACILITY

The test facility consists of two integrated loops plus appropriate control and instrumentation consoles. The indoor loop, illustrated on Figure 3-36, consists of a blower which delivers up to 2000 cfm of air, and which together with the backpressure damper determines the external resistance of the indoor air handler; a nozzle-plenum assembly which meters the air flow; air sampler stations which measure dry bulb and wet bulb temperature upstream and downstream of the indoor air handler; the air handler test unit; a humidifier; and an electrical resistance heater. The loop is either open or closed, depending on whether the system is in the heating or cooling mode, respectively.

The outdoor loop of the test facility is illustrated on Figure 3-37. It consists of an insulated room in which the outdoor air handler test unit is located, and in which the air sampler (wet and dry bulb temperature) is located; ducting for the air handler exhaust; a blower which delivers up to 4400 cfm of air; a nozzle-plenum assembly which meters the air flow; a humidifier; and an electrical resistance heater. The duct is fully insultated, and the room is fully insulated. The loop is either open or closed, depending upon whether the system is in the cooling or heating mode, respectively.

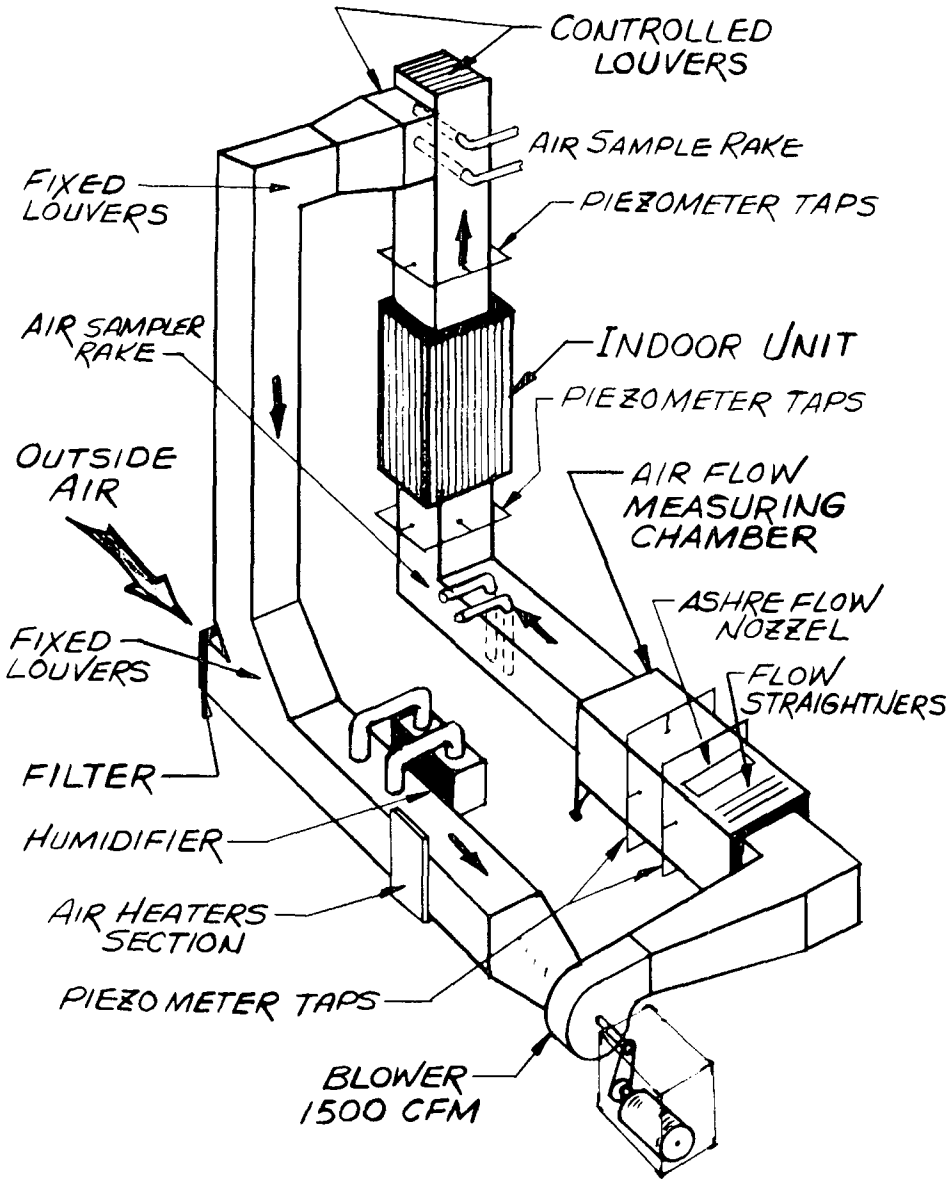

Figure 3-36. Indoor Test Facility

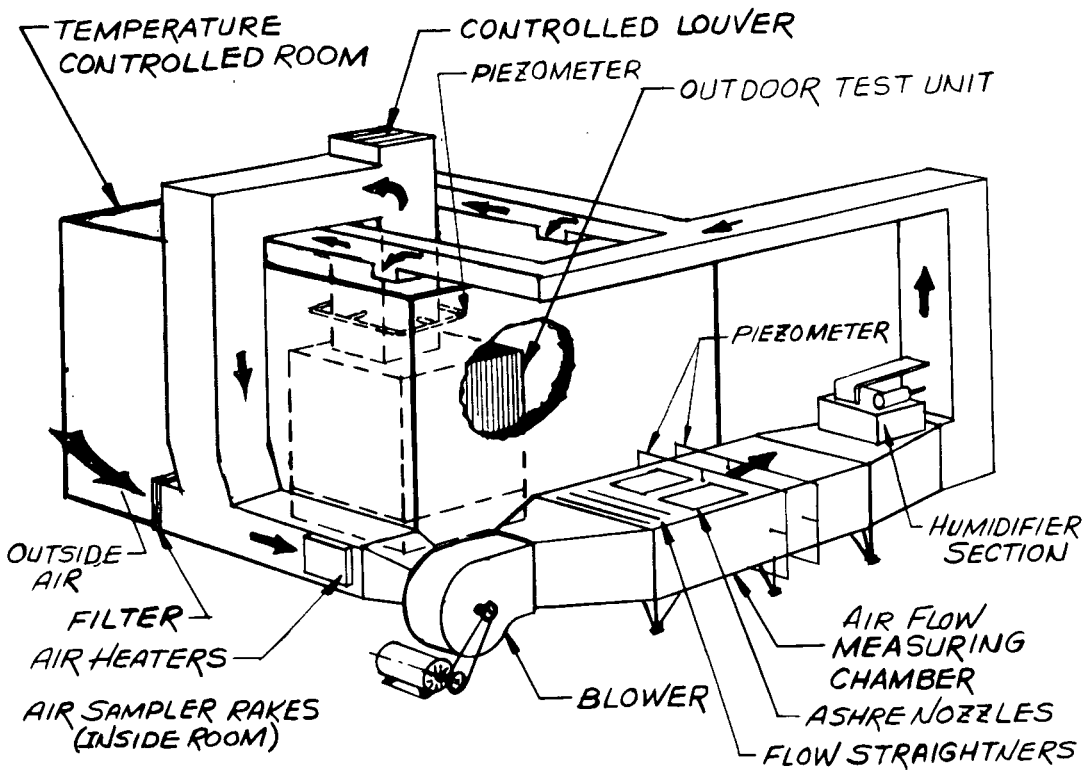

Figure 3-37. Outdoor Test Facility

The controls and instrumentation readout equipment are located in a 3-panel console and in a wall-mounted panel. They include controls for the air handlers, fans, temperature, humidity, and automatic data recording; and readout equipment for temperature, pressure and flow.

3.5.4 TUNING TESTS

The tuning tests were divided into two segments: stabilizing operation, and optimizing operation.

3.5.4.1 Stable Operation

The objective of this effort is to match the air and refrigerant flow rates to the heat exchanger size, air flow and expansion valve control characteristics. This operation is basically a trial and error exercise, guided by the extensive experience in the HVAC industry.

The initial approach was to implement a dual circuit evaporator configuration in the outdoor unit. However, this configuration produced excessive pressure drop (refrigerant side) and sufficient uncertainty in the liquid/ vapor interface to cause the control system to oscillate through large excursions in flow and temperature. The unit was replaced with a three circuit unit. The resultant decrease in pressure drop coupled with tailoring the air flow resulted in nominal operation.

3.5.4.2 Optimizing Operation

This segment of the testing was accomplished utilizing techniques developed during prior testing. First, the outdoor hydronic coil was regulated to design capacity by restricting the air-flow over the effective position of the heat exchanger. Next, the R22 coils were restricted on the air side to optimize their capacity as evaporators. During this operation, circuit balance and exit superheat conditions were maintained. The optimum R22 charge was determined to be 11 lbs. for the heating mode and 14 lbs. for the cooling mode. All subsequent testing was conducted with 14 lbs. of R22. The penalty for operating under this non-optimum condition is less than a 1% capacity loss during the heating mode. This comes about as a result of reduced condenser effectiveness due to an accumulation of liquid at the cold end.

3.5.5 PARAMETRIC TEST

The objective of this test is to map performance at several heating and cooling mode points. Two points in the heating andtwo points in the cooling mode were selected. The capacity of the respective heat exchangers was mapped and compared with predicted data.

3.5.5.1 Test Configuration

The configuration under test resulted from the stabilization and optimization activities previously described. As a result, the configuration is essentially the reference design, with a 3 circuit refrigerant heat exchanger in the outdoor unit, replacing the original 2-circuit unit.

3.5.5.2 Test Results

The test matrix is presented as Table 3-1. A summary of the test data is presented in Table 3-2. The representative temperatures and pressures of interest are plotted on Figures 3-38 and 3-39 for cooling and heating, respectively. Measured capacities are generally in good agreement with the predictions and enhance the confidence in demonstrating overall gas heat pump operation.

Table 3-1. Air Handler Test Matrix

COOLING MODE									
	95°F DAY					105°F DAY			
DATA POINT	INDOOR AIR, CFM	OUTDOOR AIR, CFM	HEATER BTUH	WATER FLOW, GPM	DATA POINT	INDOOR AIR, CFM	OUTDOOR AIR, CFM	HEATER BTUH	WATER FLOW, GPM
1	1350	4000	22,500	2.2	11	1350	4000	23,100	2.2
2	1350	4000	22,500	1.5	12	1350	3800	23,100	2.2
3	1350	4000	22,500	1.0	13	1350	3600	23,100	2.2
4	1350	3800	22,500	2.2	14	1150	3600	23,100	2.2
5	1350	3600	22,500	2.2	15	1150	3800	23,100	2.2
6	1150	3600	22,500	2.2	16	1150	4000	23,100	2.2
7	1150	3800	22,500	2.2	17	1350	4000	20,000	2.2
8	1150	4000	22,500	2.2	18	1350	4000	26,200	2.2
9	1350	4000	20,000	2.2					
10	1350	4000	25,000	2.2					
HEATING MODE									
	45°F DAY					60°F DAY			
19	1800	4000	22,200	2.2	30	1800	4000	22,200	2.2
20	1800	4000	22,200	1.5	31	1800	3800	22,200	2.2
21	1800	4000	22,200	1.0	32	1800	3600	22,200	2.2
22	1800	3800	22,200	2.2	33	1600	4000	22,200	2.2
23	1800	3600	22,200	2.2	34	1350	4000	22,200	2.2
24	1600	4000	22,200	2.2	35	1350	3800	22,200	2.2
25	1350	4000	22,200	2.2	36	1350	3600	22,200	2.2
26	1350	3800	22,200	2.2	37	1800	4000	20,000	2.2
27	1350	3600	22,200	2.2	38	1800	4000	24,400	2.2
28	1800	4000	20,000	2.2					
29	1800	4000	24,400	2.2					

Table 3-2. Comparison of Test Data and Performance Predictions

CASE	DATA POINT	CONDENSER MEASURED Btuh	CAPACITY PREDICTED Btuh	EVAPORATOR MEASURED Btuh	CAPACITY PREDICTED Btuh	HYDRONIC MEASURED Btuh	CAPACITY PREDICTED Btuh	REFRIGERANT MEASURED lbs/hr	FLOW PREDICTED lbs/hr
95°F DAY	1	48,900	48,600	36,400	34,300	22,700	22,500	489	510
105°F DAY	11	48,400	48,200	34,400	32,800	23,100	23,100	472	514
45°F DAY	19	36,500	38,400	27,800	26,900	23,500	22,200	365	393
60°F DAY	30	45,000	45,100	35,000	33,900	22,300	22,200	467	488

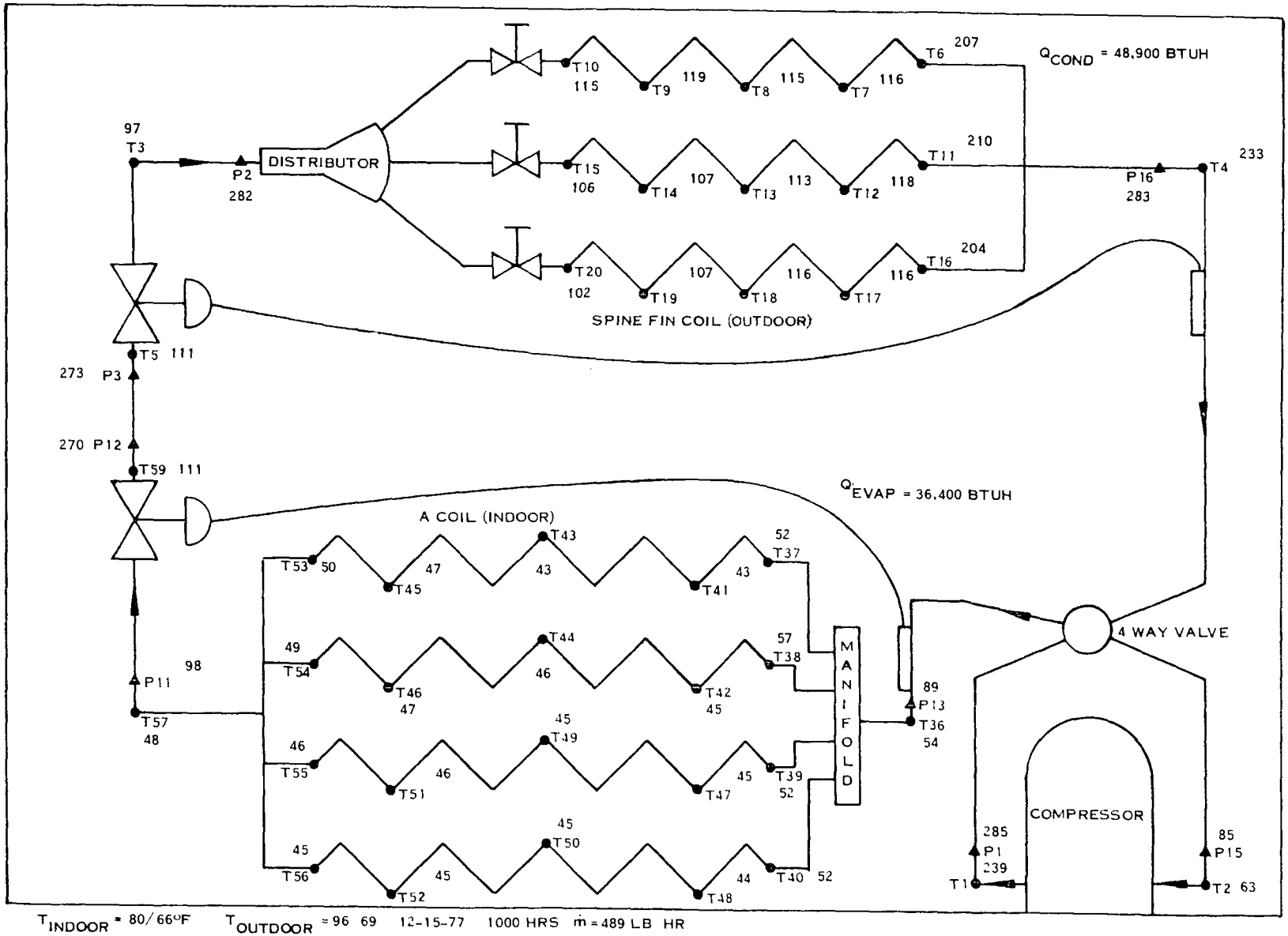

Figure 3-38. Temperature (°F) and Pressure (PSIA) Map - Data Point 1 (Cooling)

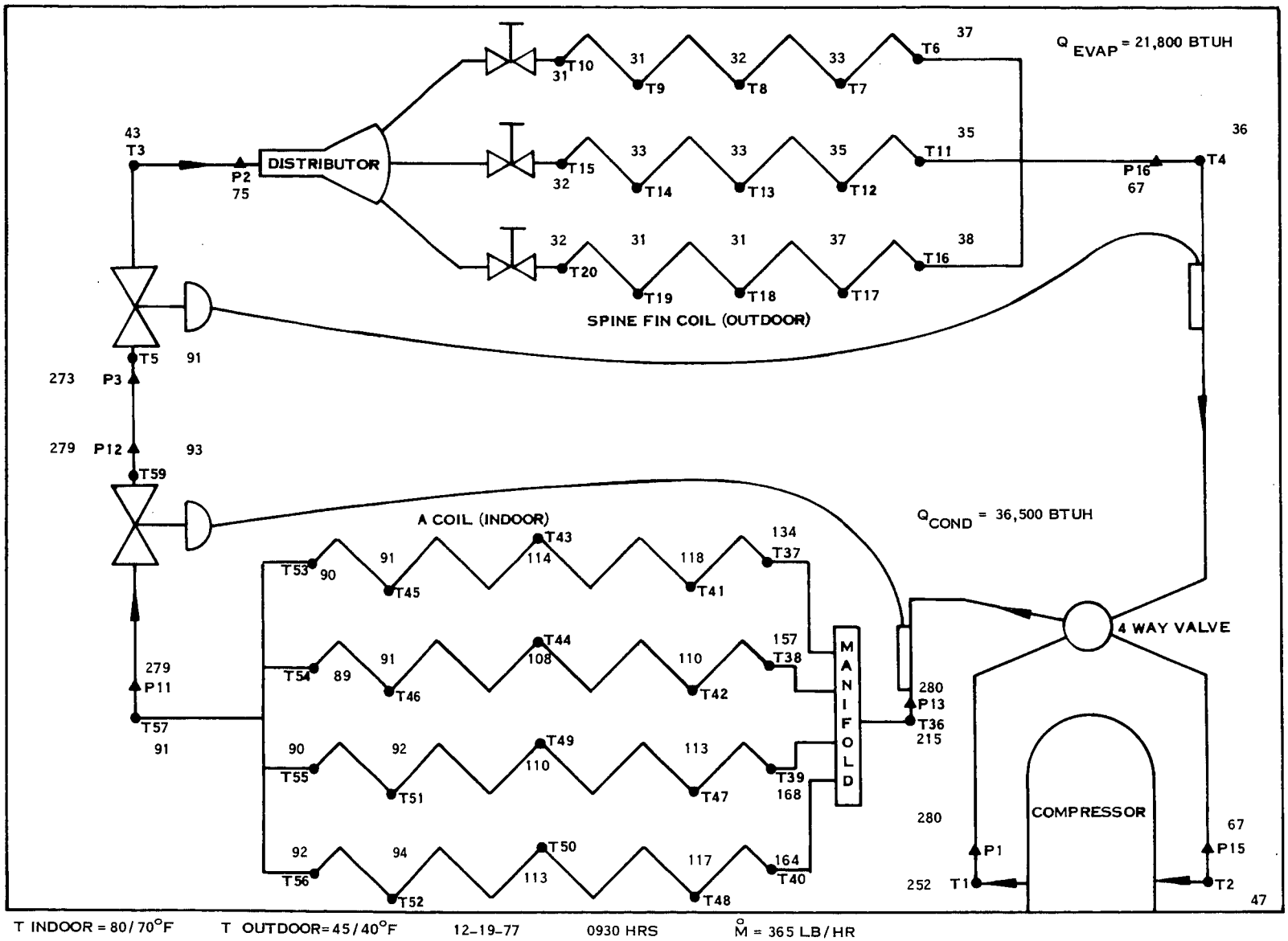

Figure 3-39. Temperature (°F) and Pressure (PSIA) Map - Data Point 19 (Heating)

3.5.5.3 Summary

- The air handlers were optimized at the cooling design point, except that the outdoor spine fin coil was balanced as an evaporator in the heating mode, per standard refrigerant practice.

- The air handlers were characterized during the parametric test.

- The preliminary design modifications to be considered on the Prototype #2 design have been documented.

- The parasitic power goal was achieved and may yet be improved depending upon firing rate controls selected.

- Safe and reliable operation was demonstrated.

APPENDIX A

FREE PISTON STIRLING ENGINE TEST PLAN

APPENDIX A

FREE PISTON STIRLING ENGINE TEST PLAN

1. INTRODUCTION

This plan provides a summary of the detailed FPSE Test Plan. The objectives of the testing, equipment to be tested, the test facility components, safety procedures, test scope and records are described below.

2. PURPOSE

The purpose of testing is to evaluate the following:

- Proof of design concept.
- Initial characterization of engine operation with the two mass system.
- Optimization of engine's gas springs and related mass characteristics.
- Performance evaluation FPSE configuration.
- Identification of design weaknesses and approaches to correcting same.
- Establish an operational experience base for future FPSE/inertia compressor testing.

3. EQUIPMENT TO BE TESTED

Component testing of the FPSE will be performed with a pneumatic pump providing the power absorbing load system. A Prototype #1 combustor unit will be combined with the engine and will afford the first demonstration of performance when integrated with the Stirling engine. The FPSE will be charged with high pressure helium gas ranging from a low of 580 psia to 1170 psia. Motion of the engine's piston will drive the helium pump's reciprocating shaft. The resulting compressed helium gas will be throttled and subsequently cooled prior to being returned to the bounce space volume at suction conditions. The total mass of the helium pump reciprocating components has been adjusted to provide the desired frequency of operation in concert with the spring constants of the multiple gas spring system.

4. TEST EQUIPMENT

The test equipment, diagnostic instrumentation, and control systems have been designed, assembled and checked out. Each facet of the total system has been broken down into discrete subsystems. The equipment consists of the following subsystems:

- Console Assembly
- Temp. Monitor Panel
- Stirling Engine Controls
- Meter Relay Panel
- Gauge and Meter Panel
- Glycol Mixture Pump Std.
- Glycol Pumping Schematic
- Helium Pump Load Assembly
- Natural Gas Supply System
- Combustion Air System
- Helium Supply Loop
- Controls Schematic
- Instrumentation Schematic

5. SAFETY

The following are some applicable general safety guidelines:

1. Wear safety glasses at all times.
2. Coordinate all activities through the Testing Supervisor.
3. Do not open any valves until appropriate pressure gauges have been checked for existing environmental conditions.

4. Do not attempt to open any portion of helium system until entire system is at ambient pressure conditions.

5. Do not attempt to run engine if safety circuits are not operable.

6. Keep helium gas bottles chained at all times.

7. Keep transient personnel limited to 2 persons and have them check in with Test Supervisor.

8. Assume all combustor parts are hot and respect same accordingly.

9. Do not allow any smoking in test facility.

10. Vent all refrigerant (R22) out of doors when venting down system.

11. All pressure relief valves must be vented downward towards floor.

12. All electrical components must be properly grounded.

13. Inspect natural gas system for leaks on a periodic basis.

14. Do not attempt to reignite burner if frit I. D. temperature is greater than 1200°F.

15. Make certain combustion products are exhausted out of doors through vent system. Purge combustor system with air before attempting to ignite burner.

6. TEST SCOPE

This test plan is intended as a flexible guide in evaluating the operational and performance characteristics of the FPSE and helium pump. Basically the engine will be tested by setting a predetermined firing rate on the combustor. After the engine is started the helium gas throttle valve will be adjusted to load the helium pump which, in turn, controls the engine piston's motion. The engine will be allowed to operate at safe amplitudes of both piston and displacer motions. Data will be taken to determine the resulting performance characteristics. Tests will be conducted at various charge pressures, excess combustion air percent flowrates and different fuel flow levels. A matrix of operating test points is delineated in Table A-1.

Table A-1. Operating Test Point Definition

TEST PT. NO.**	2YYZ	2YYZ	2YYZ	4YYZ	4YYZ	4YYZ	6YYZ	6YYZ	6YYZ
FIRING RATE $\frac{BTU}{HR}$	20,413			41,392			62,372		
FUEL FLOW (SCFM)	0.36			0.73			1.1		
AIR FLOW (SCFM) % EXCESS ℄	3.46, 0	3.98, 15	4.50 30	7.05, 0	8.11, 15	9.17 30	10.63, 0	12.23, 15	13.82 30
HELIUM CHARGE * PRESSURE (psig) ℄	1. = 580 2. = 870 3. = 1170			1. = — 2. = 870 3. = 1170			1. = — 2. = — 3. = 1170		
COOLANT FLOWRATE (gpm) ℄	2.2			2.2			2.2		

* 1 BAR = 14.5 psi 40 BAR = 580 psig
60 BAR = 870 psig
80 BAR = 1160 psig

** TEST POINT NO. IDENT. = XYYZ
X = FIRING RATE in 10^4 BTU/HR
YY = EXCESS AIR IN 100 X % OF EXCESS AIR
Z = 1, 2 OR 3 FOR HELIUM CHARGE PRESSURE LEVEL

℄ ALLOWANCE ± 3%

7. TEST RECORDS

Test records will be maintained at all times. These will take the form of either entries in the Engine Log Book and/or recorded test data on the specially created forms. The log book will stay with the engine. The responsible test supervisor and/or test engineer will enter all pertinent data and observations and sign and date the entries. Master copies of all data sheets will be maintained by the Manager of Heat Engines Engineering. Copies of these data will be available to all personnel. However, the master copies will stay in the files.

APPENDIX B

AIR HANDLER TEST PLAN

APPENDIX B

AIR HANDLER TEST PLAN

The following is a synopsis of the air handler test plan. The overall objectives as well as the approaches to acquiring specific test points are summarized.

The overall objectives of the air handler testing are as follows:

- To characterize the indoor and outdoor air handler in both cooling and heating modes over a range of operating parameters.
- To identify the necessary design modifications to be implemented on the Proto II design.
- To assess the adequacy of the controls system.
- To ascertain the degree of achievement of parasitic power goals.
- To assure safe and reliable operation.

The specific conditions of the test plan were provided as a flexible guide for testing the Prototype air handlers are summarized as follows:

Optimum Charge-Cooling (Test Point OCC-1)

Charge the refrigerant loop with 8.0 lbs of R22. Utilize the standard evacuation and fill procedure.

Fill the Hydronic Loop with a 50/50 mixture by volume of Ethylene Glycol/Distilled Water so that the sight glass on the sump tank is about half filled. It is permissible to operate the pump.

Turn on system in the cooling mode with outdoor ambient at 35°C (95°F) and indoor ambient at 27°C (80°F) drybulb, 19°C (67°F wetbulb). Outdoor fan = 4000 CFM, indoor fan = 1350 CFM, and water flow = 2.2 GPM. Check for leaks and other malfunctions. Note all malfunctions on event log.

Run system at the cooling design point until stable. STABILITY is defined as a change of less than 0.55°C (1°F) during two successive 15 minute readings of the refrigerant temperature exiting the coils in both the indoor and outdoor units, while both ambient temperatures remain unchanged.

Add refrigerant incrementally until optimum cooling capacity is obtained (see Figure 1). Allow system to stabilize before proceeding to the next point.

Check the EER (Engergy Efficiency Ratio), which is defined as the total cooling (Btuh) divided by the input power (watts).

Record all stable test condition data on data sheet.

Weigh and record the optimum cooling charge.

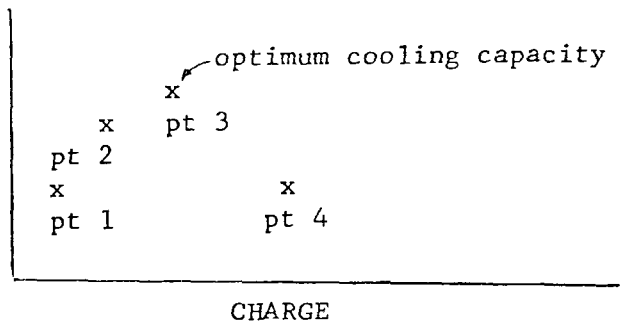

Figure 1. Optimum Charge Cooling

Cooling Design Point (35°G\95°F) (Test Point C1)
Fill refrigerant loop with the optimum charge.

Operate system at cooling design point. Allow to stabilize. Record data on data sheet.

Reduce the face area of the indoor and outdoor refrigerant coils and the outdoor water coil (one coil at a time) until the design points are achieved. Allow each point to stabilize at the reference conditions noted in test matrix. Record data on data sheet. Note: The blockage of refrigerant coils will require that the amount of charge be slightly reduced.

When the design capacity of each of the three coils is achieved (stable point), record the remaining face areas of the coils. Secure the blocking material so that it will not be disturbed during the remaining tests.

Vary the parameters to the values specified in test matrix. After each point has stabilized, record data on data sheet. This will provide a full performance map of the cooling design point.

Heating Design Point ($7^{o}C/45^{o}F$) (Test Point H1)

Using the blocked coil configuration finalized in the prior test, measure the air handler performance at the heating design point, with outdoor ambient at $7^{o}C/45^{o}F$, indoor ambient at $21^{o}C/70^{o}F$. It is permissible to deviate from this temperature with Engineering approval. Also outdoor fan = 4000 CFM, indoor fan = 1800 CFM, and water flow = 2.2 GPM. Allow system to stabilize. Record data on data sheet.

Reduce the face area of the indoor Hydronic coil until the design point is achieved, by blocking the coil with cardboard. Allow system to stabilize. Record on data sheet.

Secure the cardboard blocking so it will not be disturbed during the remaining tests.

Vary the parameters to the values specified in test matrix. After each point has stabilized, record data on data sheet. This will provide a full performance map of the heating design point.

Cooling Point ($29^{o}C/85^{o}F$) (Test Point C2)

Using the blocked coil configuration of prior tests, measure the air handler performance at the lower cooling point, with the outdoor ambient at $29^{o}C/85^{o}F$ and indoor ambient at $27^{o}C$ ($80^{o}F$) drybulb and $19^{o}C$ ($67^{o}F$ wetbulb). Allow system to stabilize. Record data sheet.

Vary the parameters to the values specified in test matrix. After each point has stabilized, record data on data sheet. This will provide a full performance map of the lower cooling point.

Cooling Point ($41^{o}C/105^{o}F$) (Test Point C3)

Repeat steps of prior test, except that the outdoor ambient temperature shall be $41^{o}C/105^{o}F$. This will provide a full performance map of the upper cooling point.

Heating Point ($16^{o}C/60^{o}F$) (Test Point H2)

Repeat step of heating design point except that the outdoor ambient temperature shall be $16^{o}C/60^{o}F$. This will provide a full performance map of the upper heating point.

GENERAL ELECTRIC

100 Years of
Progress for People

Space Division

Headquarters: Valley Forge, Pennsylvania □ Daytona Beach, Fla. □ Evendale, Ohio

□ Huntsville, Ala. □ Bay St. Louis, Miss. □ Houston, Texas □ Sunnyvale, Calif.

□ Beltsville, Md. □ Tacoma, Wash. □ Palmdale, Calif. □ Bedford, Mass.

□ Washington, D.C. Area