DEVELOPMENT OF THE GENERAL ELECTRIC STIRLING ENGINE GAS HEAT PUMP

R. C. Meier
Program Manager, Gas Heat Pump Program
General Electric Company
P. O. Box 8555
Philadelphia, Pennsylvania 19101

FILE COPY
DO NOT
REMOVE

SUMMARY

The Stirling/Rankine Heat Activated Heat Pump is a high performance product for space heating and cooling, particularly in northern climates. The use of waste heat from the Stirling engine, in conjunction with the inherent high engine efficiency, makes the Stirling/Rankine Heat Activated Heat Pump a competitive product for cooling applications and an exceptional performer for heating applications.

A program to develop and market the Stirling/Rankine Heat Activated Heat Pump has been underway since 1975. The Gas Research Institute, the Department of Energy, and the General Electric Company have been conducting the development program, which is now approaching the field testing phase. An engineering prototype model has previously been successfully built and tested, and an improved prototype is currently being fabricated for a field evaluation test.

Market and business assessments conducted in parallel with the development program indicate that a large potential market for heat activated heat pumps exists. With realistic market projections for this new product,it appears that the Stirling/Rankine heat pump can be an attractive product offering for General Electric. Coupled with significant operating cost savings for the consumer, reduced load demands on gas and electric utilities, and a substantial national energy conservation potential, the Stirling/Rankine Heat Activated Heat Pump appears to be an attractive product for the marketplace of the 1980's.

DEVELOPMENT OF THE GENERAL ELECTRIC STIRLING ENGINE GAS HEAT PUMP

INTRODUCTION

The Stirling/Rankine Heat Activated Heat Pump concept is schematically illustrated in Figure 1. The heart of the Stirling/Rankine heat activated heat pump (HAHP) is the combustor/Stirling engine/linear inertia compressor assembly which replaces the conventional motor/compressor unit employed in electric heat pumps. Heat input provided by a gas combustor provides thermal energy to the Stirling engine working fluid, helium. The engine displacer and the engine power piston operate with a prescribed phase and displacement relationship to create the highly efficient Stirling thermodynamic cycle. Power delivered by the power piston is transferred to the heat pump refrigerant through a high efficiency linear inertia compressor. The power piston is directly connected to the compressor housing with the refrigerant being compressed by a free piston reciprocating within the housing - also with a prescribed phase and displacement relationship. The energy provided by the combustor/Stirling engine/linear inertia compressor is thus controlled by the rate of heat input, the phase and displacement relationships between the displacer, the power piston, and the compressor piston, and by the external conditions imposed on the refrigerant coil by the load (building) and outdoor ambient air temperature.

The Stirling engine has a high operating efficiency, since its thermodynamic cycle approaches that of a Carnot cycle. Because of this,the overall heat pump COP is very high. However, an additional performance benefit is obtained by using the waste thermal energy from the engine. In the Stirling/Rankine HAHP, exhaust gas waste heat is utilized to preheat incoming fresh air for the combustor, and the engine coolant (water/glycol) is circulated through a hydronic coil in the indoor air handler unit to provide additional heating in the winter. The use of waste energy from the engine, in conjunction with the high efficiency engine, makes the Stirling/Rankine HAHP a competitive product for cooling applications and an exceptional performer for heating applications.

Recognizing the high potential of the HAHP as a product, the American Gas Association and the General Electric Company initiated a program to evaluate heat activated heat pumps in 1975. The Department of Energy joined with the AGA and GE in 1976 to accelerate the development of this energy conserving product. In 1977, the Gas Research Institute assumed responsibility for the HAHP program for the American Gas Association. Today, the program is a joint GRI/DOE/GE development project, targeted for the development of a three-ton residential Stirling/Rankine HAHP. The product is designed to provide year-round gas heating and cooling, with up to 50% energy savings over competing gas furnace and electric air conditioner combination systems. The residential HAHP product is projected to offer the consumer a three to five

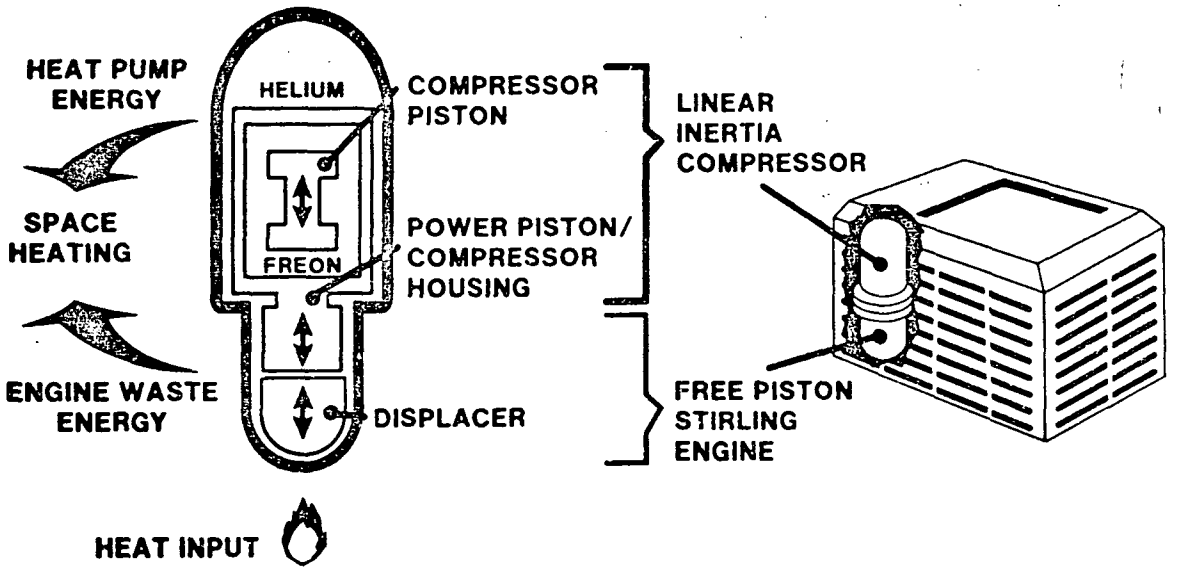

Figure 1. Stirling/Rankine Heat Activated Heat Pump

year payback on the premium initial price required by the product. With this level of rapid payback, it is projected that the Stirling/Rankine HAHP can attain a market growth history comparable to that of central air conditioning.

There are many potential benefits to be gained through the development and subsequent production and marketing of the HAHP. From a national viewpoint, the HAHP has the potential to significantly reduce both the consumption of primary fuels used in the generation of electricity for space heating and cooling, and the consumption of natural gas for space heating. From the utility industry's viewpoint, the use of a gas fired HAHP can reduce utility peak loads for electricity in summer, and help levelize gas consumption for gas utilities year round. For the consumer, the HAHP can offer significant energy savings which, when translated into cost savings, yield a product payback in a relatively short three to five year time period. Beyond this point, the consumer will realize savings over the remaining life of the system (15 years).

From the manufacturer's viewpoint, the gas fired HAHP offers a product which can complement a line of gas furnaces, electric air conditioners and electric heat pumps, and which provides a product well suited to satisfy consumer heat pump requirements in moderate to northern climates.

The program schedule is shown in Figure 2. The initial work conducted by the AGA and General Electric in 1975 concentrated on the evaluation of several different types of heat activated heat pumps employing various thermodynamic cycles for the engine and refrigerant portions of the system. At the end of this phase, the Stirling engine/Rankine compression concept was selected. The second phase of the program, currently underway, includes the development of the residential unit. This phase included the development of an engineering prototype, called the Prototype 1 unit, to validate the basic design of the engine, compressor, and the combustor components. Work on this prototype is completed. The second prototype, in the test phase as this paper is written, is designed to refine the first prototype design and yield a unit suitable for field evaluation tests. The third phase of the program, scheduled to begin in 1980, will include the development and production of 10 to 20 advanced units targeted for extensive field testing by gas utilities in various climatic areas of the nation. The final phase of the program, prior to production,will be a pilot production and field testing phase, where 50 to 100 units will be produced and tested in several pilot market areas. As indicated in Figure 2, it is anticipated that after the residential product design is validated in field testing, a commercial size unit can be developed and field demonstrated, and then moved into the pilot production and testing phase in parallel with the residential pilot market program. In this way, the usual complimentary impact of introducing both a residential and a commercial product utilizing the same basic technology and product approach can be realized.

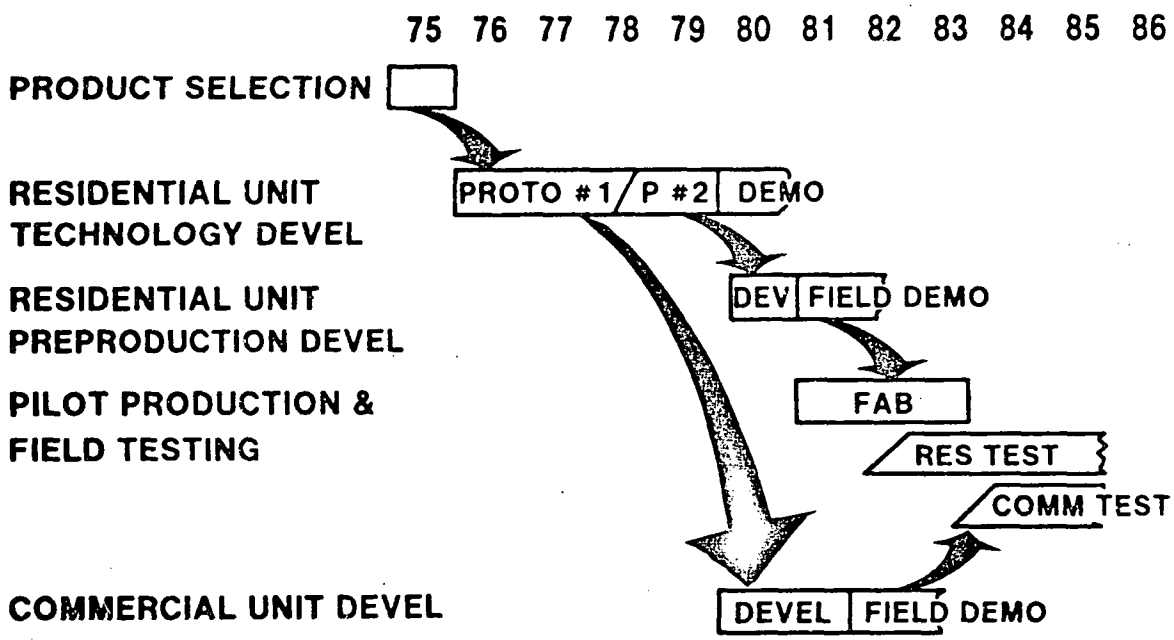

Figure 2. Heat Activated Heat Pump Product Schedule

PRODUCTION DESCRIPTION AND PERFORMANCE

The product concept for the gas fired Stirling/Rankine HAHP is shown in Figure 3. The product is intended to be similar in packaging, styling, and installation to a conventional electric heat pump. As shown in the figure, the engine/compressor assembly, complete with natural gas combustor, will be located in one section of the outdoor unit cabinet, either surrounded by, or next to, the refrigerant and hydronic coils and outdoor fan unit. The outdoor cabinet will include the heat pump controls and the pump necessary to circulate the engine coolant from the engine to the indoor air handler (for winter heating) or to the outdoor hydronic coil (in the summer).

Figure 4 shows simplified schematics of the operation of the HAHP in heating and cooling. Figure 4A shows the HAHP operating at its design point for cooling at an ambient temperature of 95°F. The three-ton design cooling load is provided by the compressor, with the engine waste heat being rejected in the outdoor unit. Figure 4B shows operation in the heating mode at an ambient temperature of 0°F. In this case, the heating load of 51K Btuh is provided by both the refrigerant and the engine waste heat: the refrigerant system provides approximately 60% of the load, and the engine waste heat provides the remaining 40%.

Table 1 compares the performance of the gas fired Stirling/Rankine HAHP at standard heating and cooling rating points to the nearest competing product, a gas furnace/electric air conditioner combination system. As indicated in the table, the gas fired HAHP offers significant improvements in performance over the gas furnace/electric air conditioner system, when compared on a primary fuel basis. This results in substantial annual cost savings to the consumer. These savings are summarized in Table 2 for three representative locales in Atlanta, Philadelphia, and Boston. Table 2 shows that savings increase as the heating load to cooling load ratio increases. This effect is primarily due to a reduction in the consumption of natural gas for heating. As the table illustrates, the substantial annual savings can rapidly offset an initially higher price for the gas fired HAHP. At projected retail prices, the consumer can recoup all of his higher initial investment for the HAHP in three to five years and begin to realize savings for the remainder of the life of the product.

DEVELOPMENT STATUS

The program schedule shown in Figure 2 indicates that the development of the first engineering prototype of the residential unit has been completed,and that development of the second prototype is well underway. Figure 5 is a photograph of the first engineering unit assembled for testing in General Electric's test facilities. The first prototype hardware was oversized to provide engineering flexibility for testing, and to accommodate the vertical orientation of the combustor/engine/compressor unit. Figure 6 presents a layout

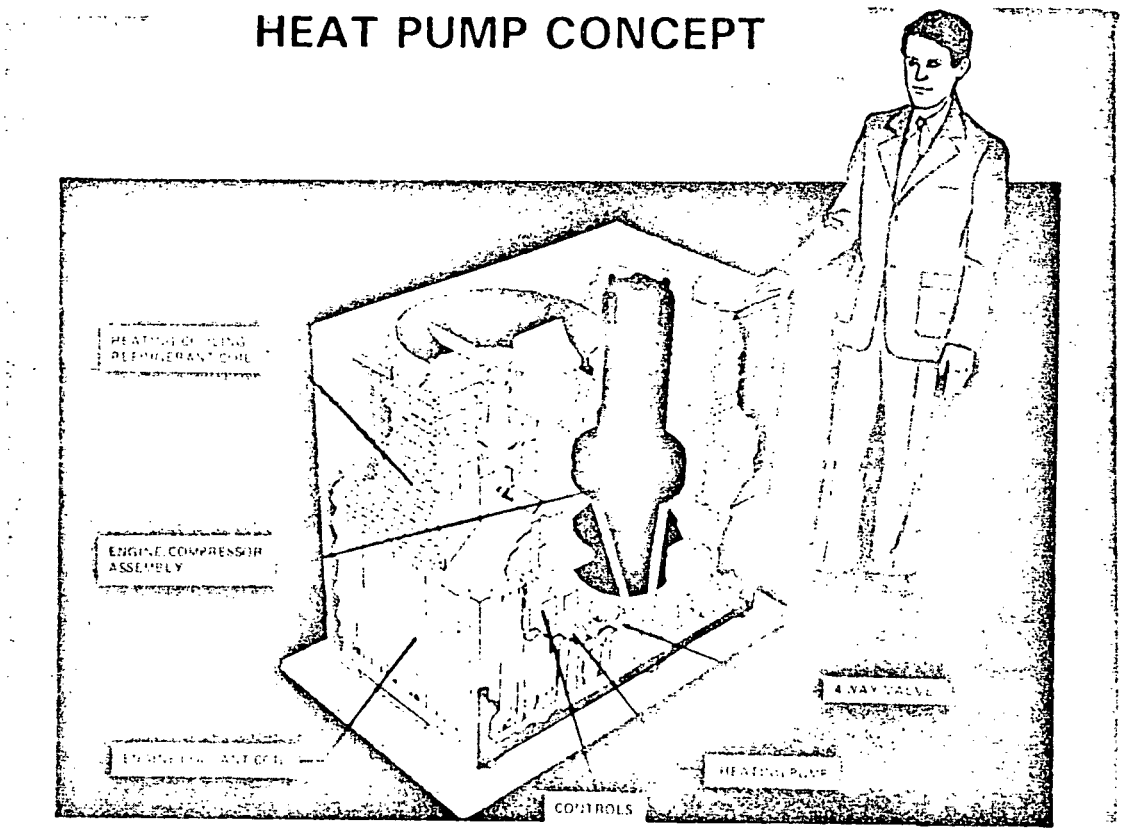

Figure 3. Natural Gas Residential Heat Pump Concept

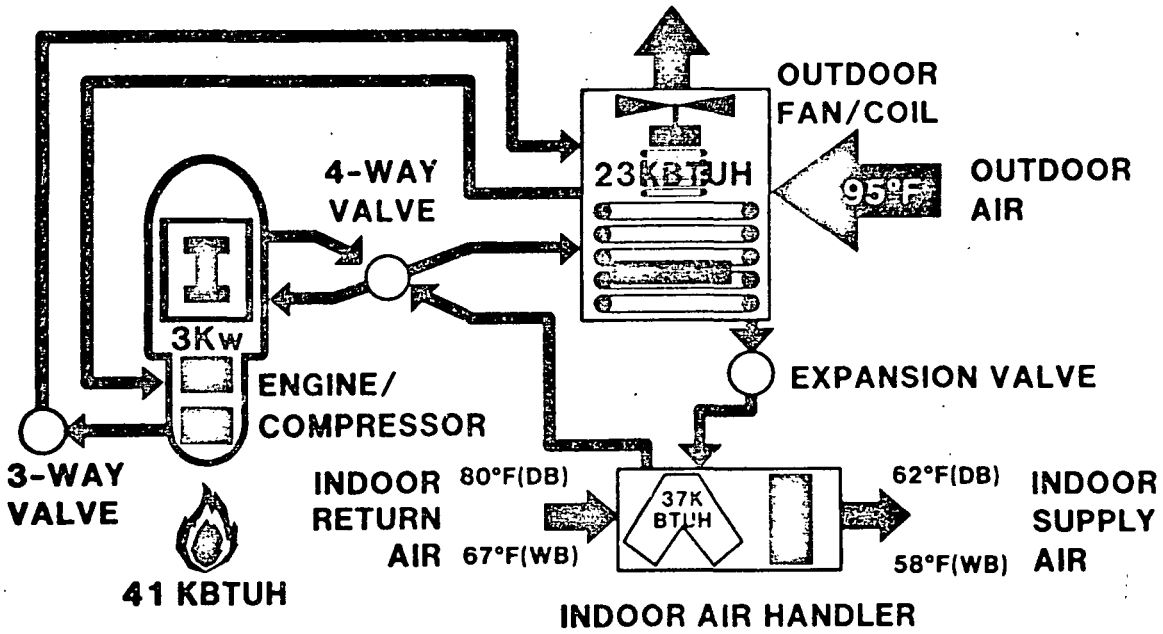

Figure 4A. Heat Activated Heat Pump-Cooling Operation

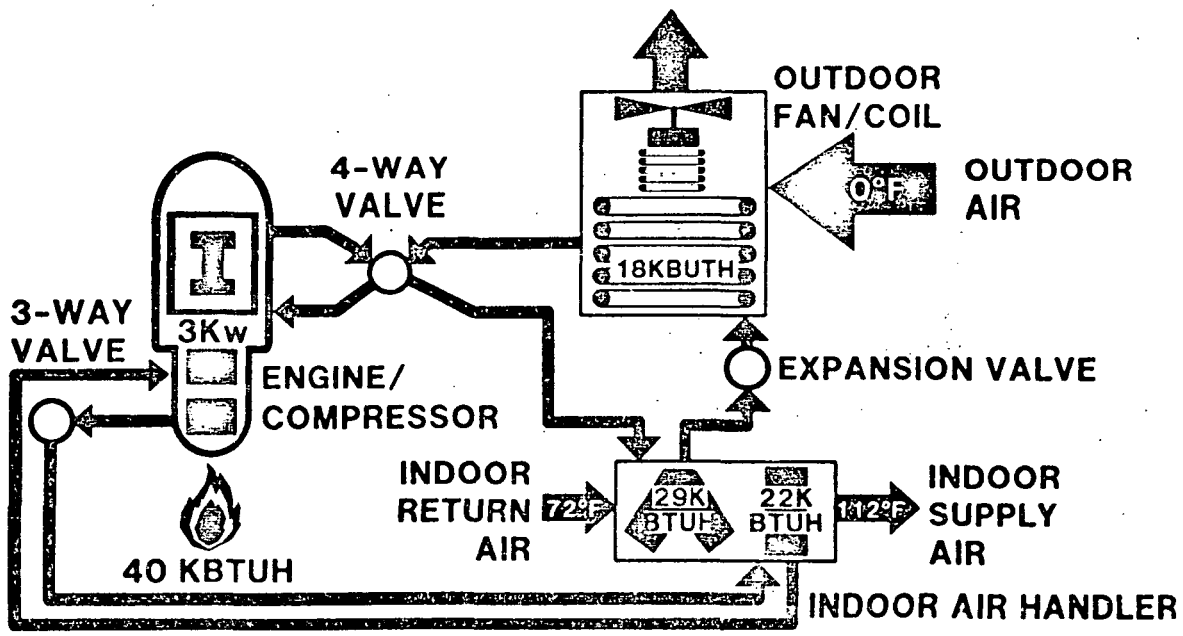

Figure 4B. Heat Activated Heat Pump-Heating Operation

Table 1. Production Performance Comparison

PHILADELPHIA AREA

	WITHOUT PARASITIC POWER				WITH PARASITIC POWER			
	AT METER		AT SOURCE		AT METER		AT SOURCE	
	NEP	GFHP	NEP	GFHP	NEP	GFHP	NEP	GFHP
COP - HEATING (47°F)	0.77	1.96	0.77	1.96	0.76	1.71	0.73	1.33
COP - COOLING (95°F)	3.90	1.08	1.2	1.08	3.30	0.99	0.98	0.83
SPF - HEATING	0.69	1.26	0.69	1.26	0.68	1.16	0.68	0.98
SPF - COOLING	3.61	1.24	1.07	1.24	3.0	1.10	0.89	0.87
SPF - ANNUAL	1.48	1.25	0.79	1.25	1.31	1.14	0.72	0.95

- NEP - GAS FURNACE/ELECTRIC AIR CONDITIONER
- 30% ELECTRIC POWER CONVERSION EFFICIENCY
- $1979

Table 2. 1985 Annual Operating Cost Savings for Advanced HAHP vs. Advanced Conventional HVAC System

	SAVINGS, $ 1979		
	SUMMER	WINTER	ANNUAL
PHILADELPHIA	47	195	242
ATLANTA	54	128	182
BOSTON	17	301	318

* GAS FURNACE/HIGH EFFICIENCY ELECTRIC AIR CONDITIONER AND NOMINAL 3-TON BUILDING LOAD.

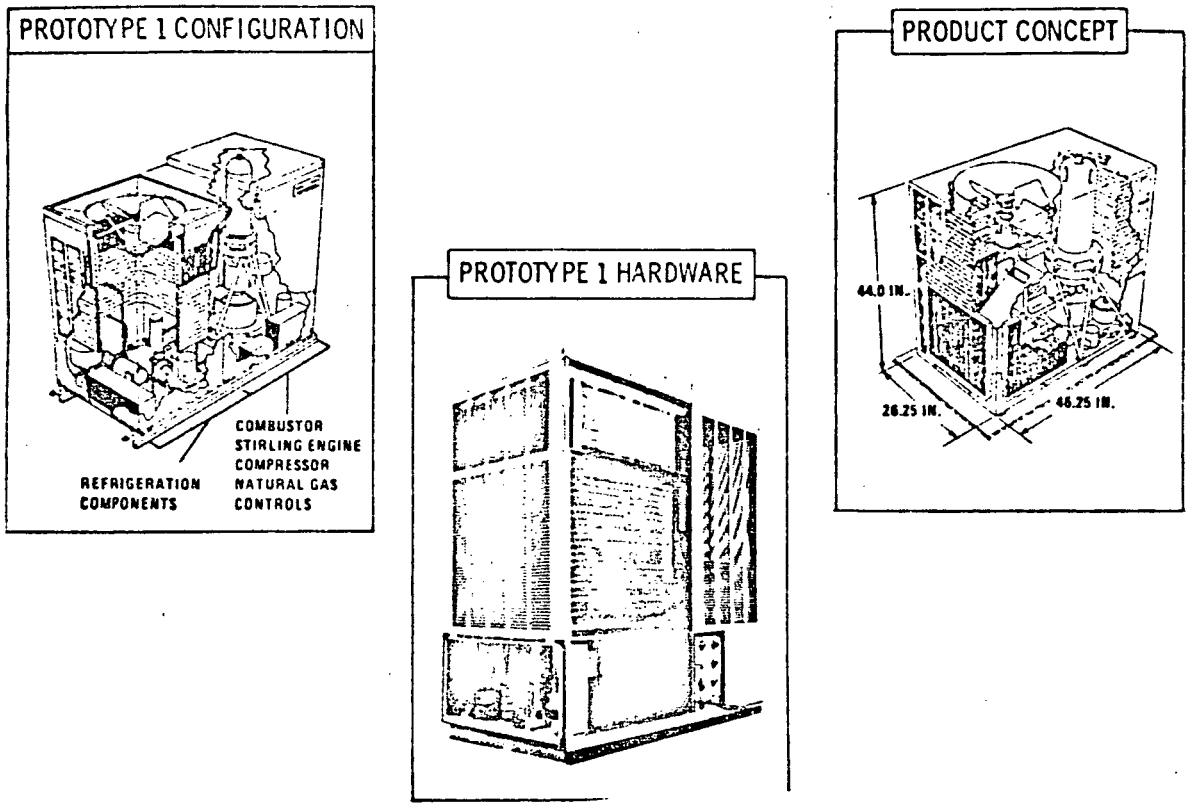

Figure 5. First Prototype Unit

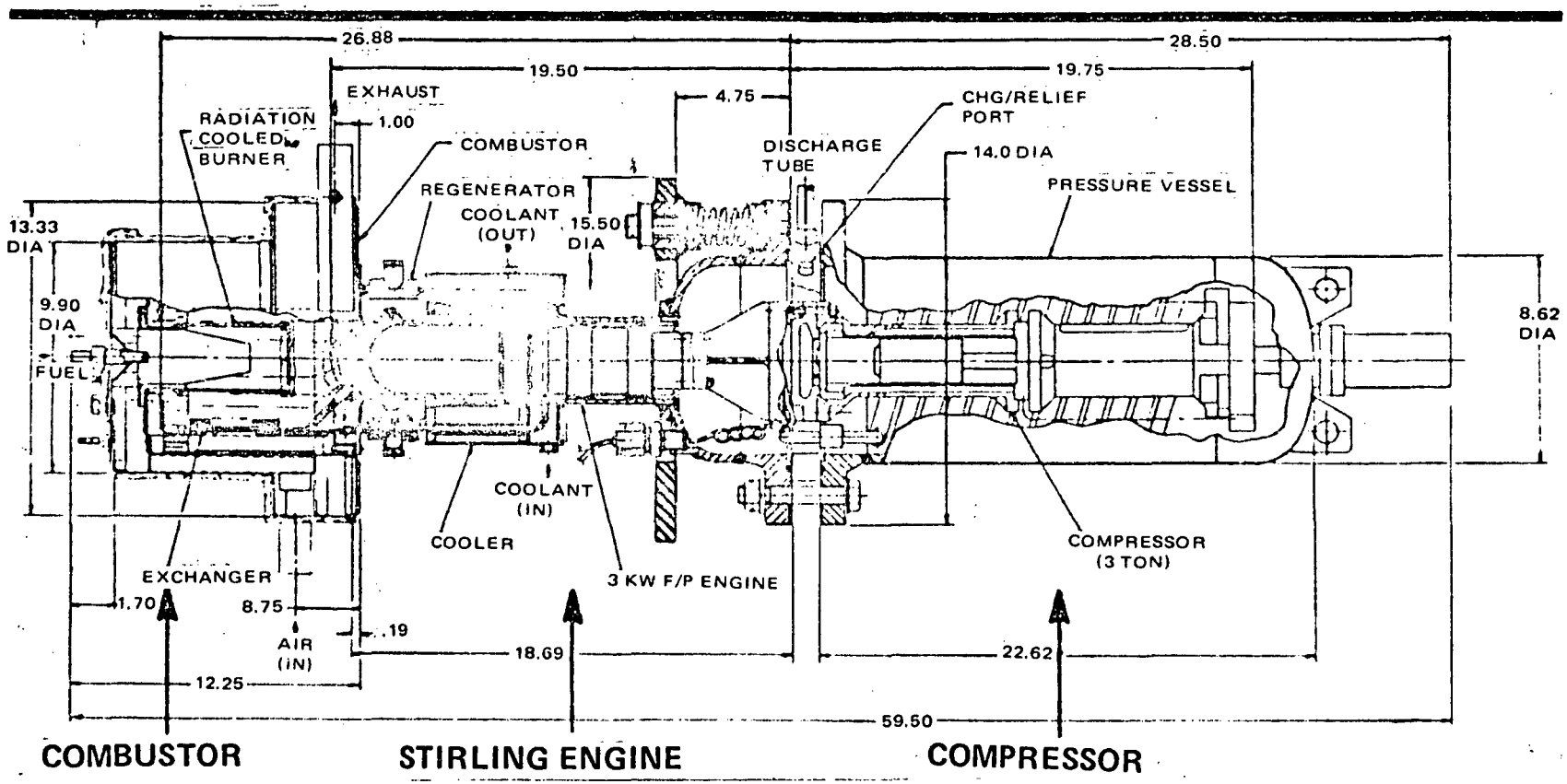

Figure 6. Combustor/Engine/Compressor Assembly

of the combustor/engine/compressor assembly. Figures 7, 8 and 9, respectively, illustrate the first prototype unit combustor, engine, and compressor.

As indicated in Figure 7, a porous transpiration burner element, operating on natural gas, provides the heat input for the helium working fluid. The compact combustor operates with 15% excess air, yielding a CO emission level of less than 0.04% at the combustor exhaust. Testing has verified the 82 to 83% efficiency obtained with the combustor, operating with an 800°F air preheat level. The combustor is composed primarily of sheet metal components, lending itself to a low cost mass producible unit.

Figure 8 shows the first prototype unit engine, including the engine housing, regenerators, and heater head subassembly, and the dynamic components (displacer and power piston). The engine operates with a maximum helium temperature of approximately 1250°F and has a 3 kilowatt power output. Because of high thermal losses and a low operating frequency, engine testing yielded only a 26% maximum operating efficiency, as opposed to the 30% design efficiency originally predicted. Lessons learned from this first prototype engine are being applied to the second prototype design, which is projected to achieve a 32 to 33% efficiency level.

Figure 9 illustrates the linear inertia compressor utilized in the first prototype, and also depicts the original research compressor fabricated and tested to demonstrate and characterize the performance of the linear free piston compressor concept. As indicated, testing yielded a 76% efficiency (isentropic) for this compressor configuration, exceeding its initial design goal. The second prototype compressor will incorporate lessons learned from the first prototype, and will be reduced in weight and cost.

Development of the second prototype, similar in design to the first prototype, is nearing completion. Figure 10 shows the assembled combustor/engine/compressor being tested in an engine test stand. The test stand uses water-cooled heat exchangers for simulating the freon coil load. After characterizing and mapping the performance and operating characteristics on the test stand, the combustor/engine/compressor is integrated with the outdoor unit coils and related controls for testing in the outdoor simulation chamber shown in Figure 11. The test chamber is connected with ducting to the indoor air handler unit as shown in Figure 12. This facility permitted complete testing of the indoor and outdoor unit combination over a wide range of ambient temperatures, simulating operation in both the heating and cooling modes.

The second prototype HAHP is scheduled for installation in a house for field testing in the first half of 1980. The design resembles the first prototype, but is smaller in size. Since this prototype will be exposed to actual operating conditions, and will be on public view, a number of outdoor unit cabinet designs, materials, and color approaches were investigated by General Electric's Industrial Design Operation

CONFIGURATION

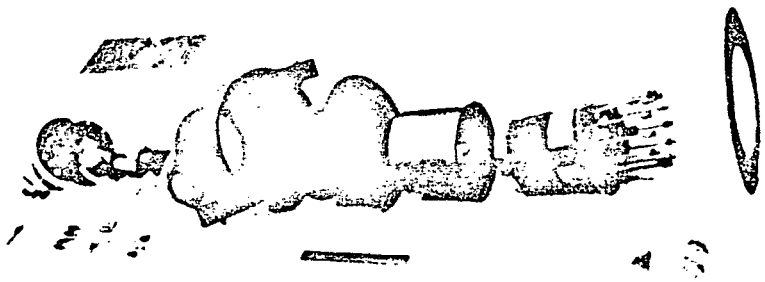

TRANSPIRATION BURNER

CHARACTERISTICS

- SHEET METAL CONSTRUCTION
- UNIFORM FLAME DISTRIBUTION
- 800^{0}F AIR PREHEAT
- STABLE FIRING-20,000 TO 60,000 BTUH
- HEAT TRANSFER EFFICIENCY - 85%

Figure 7. Prototype Combustor

ENGINE HOUSING

DYNAMIC COMPONENTS

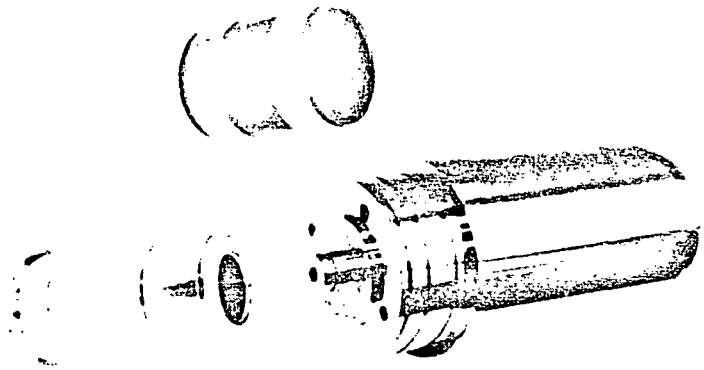

DESIGN CHARACTERISTICS

OPERATING TEMPERATURE	- 1200°F
POWER OUTPUT	- 3 KW
EFFICIENCY	- 30%
FREQUENCY	- 25-30 Hz
STATUS - TEST COMPLETED	n = 20-26%

Figure 8. Prototype Stirling Engine

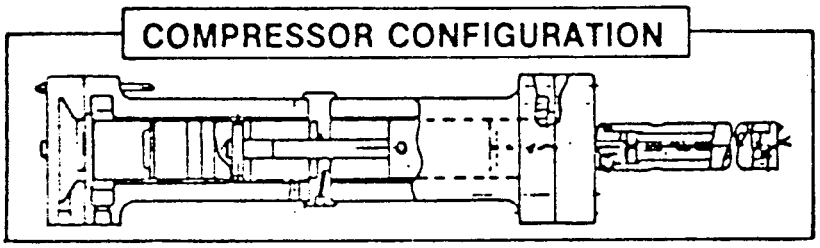

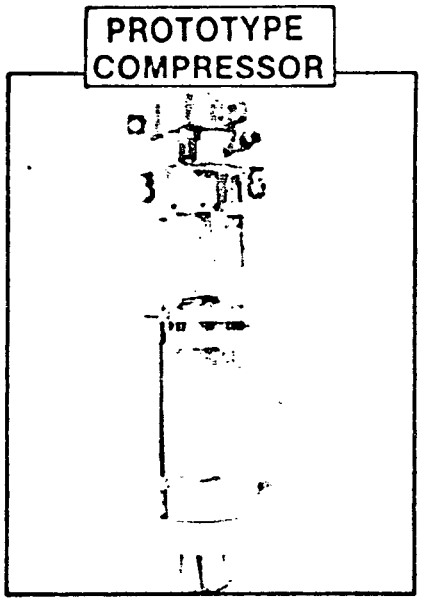

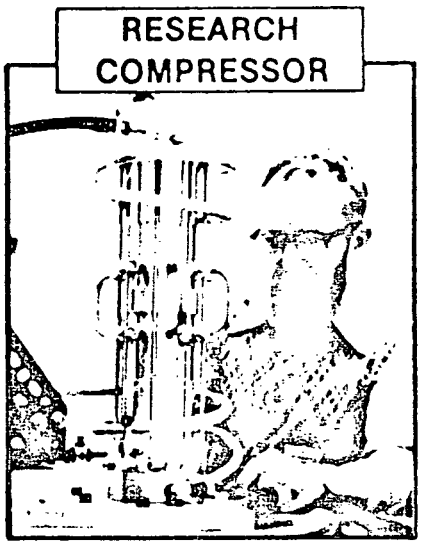

CHARACTERISTICS

- DOUBLE ACTING
- WEATHERTRON MATERIALS/VALVES
- 3-TON COOLING CAPACITY
- MEASURED EFFICIENCY - 76%

Figure 9. Prototype Linear Inertia Compressor

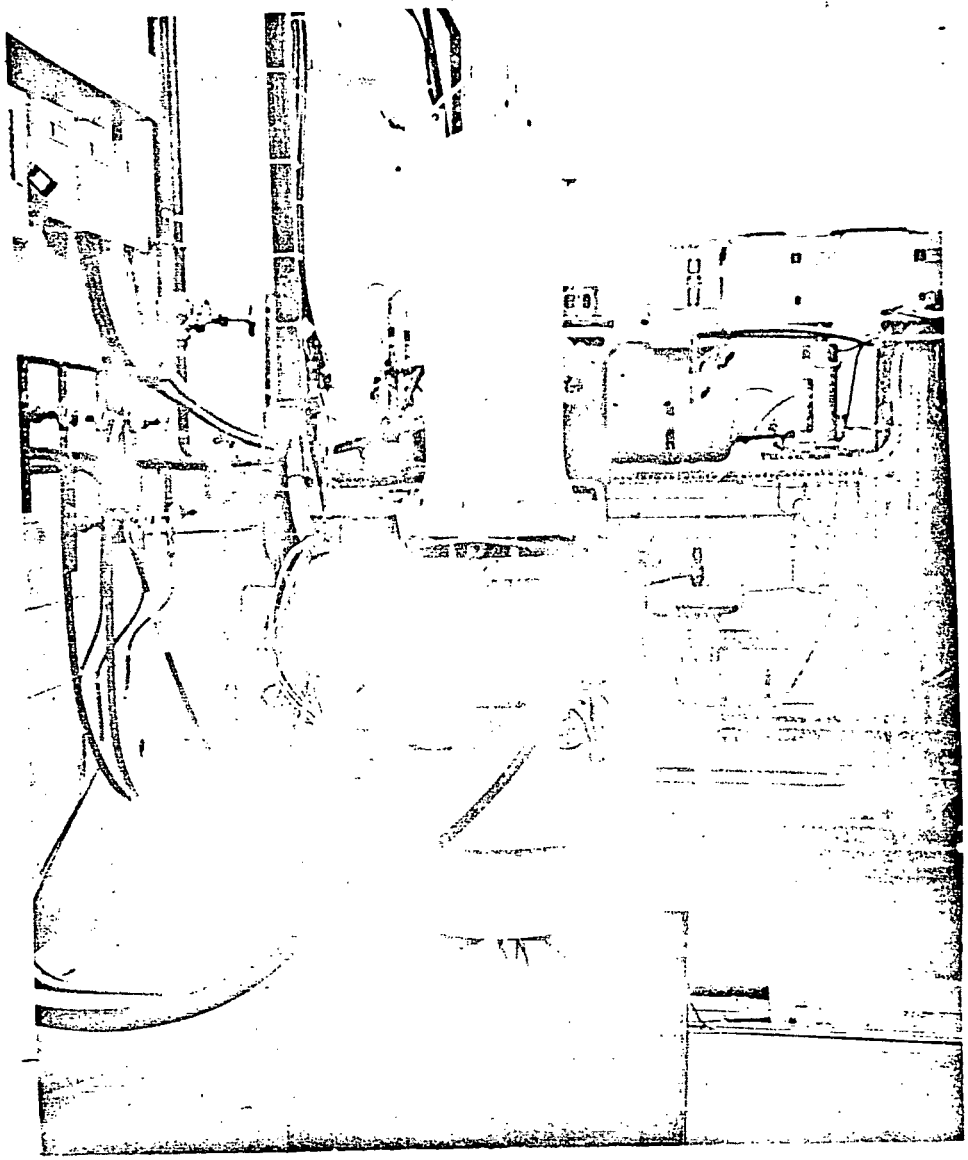

Figure 10. Combustor/Engine/Compressor Assembly Mounted Test Facility

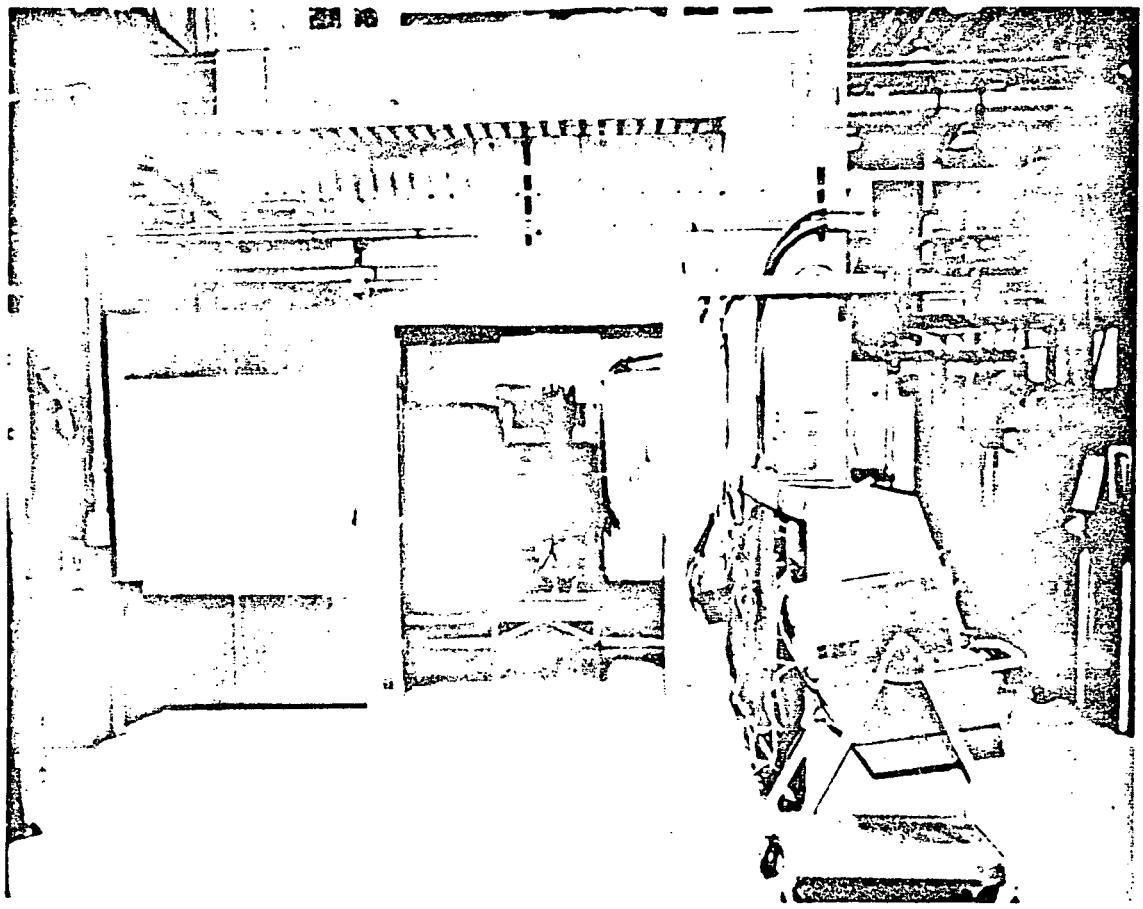

Figure 11. Gas Heat Pump Prototype Test

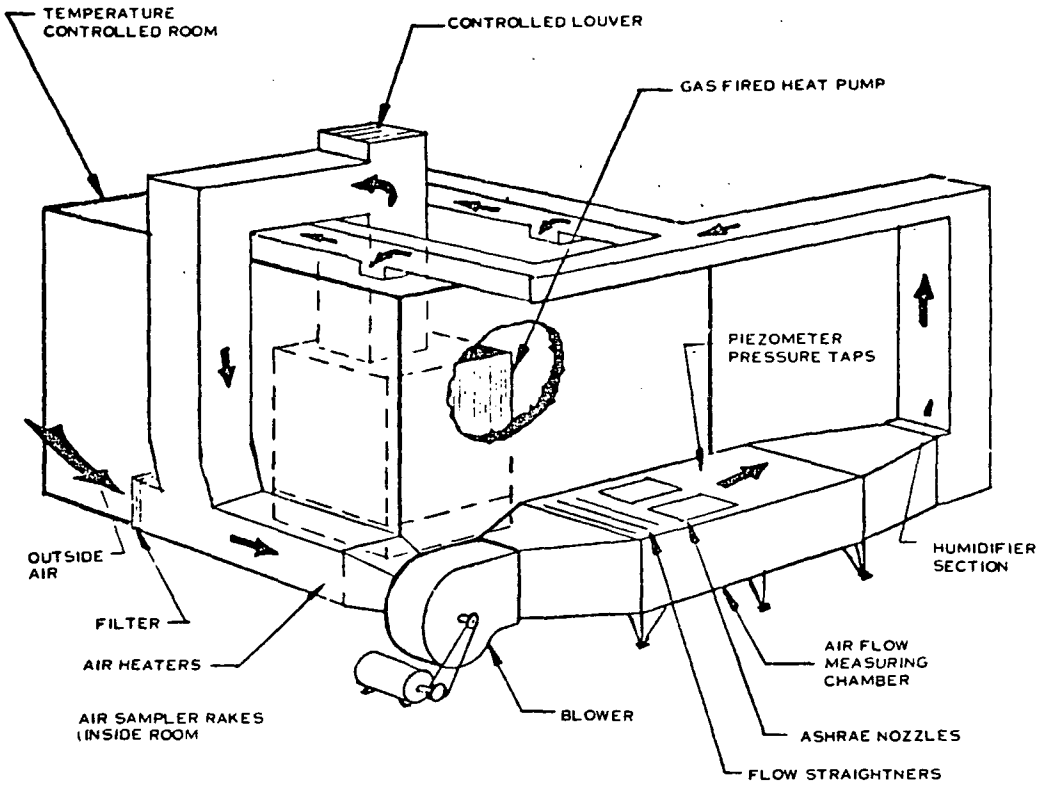

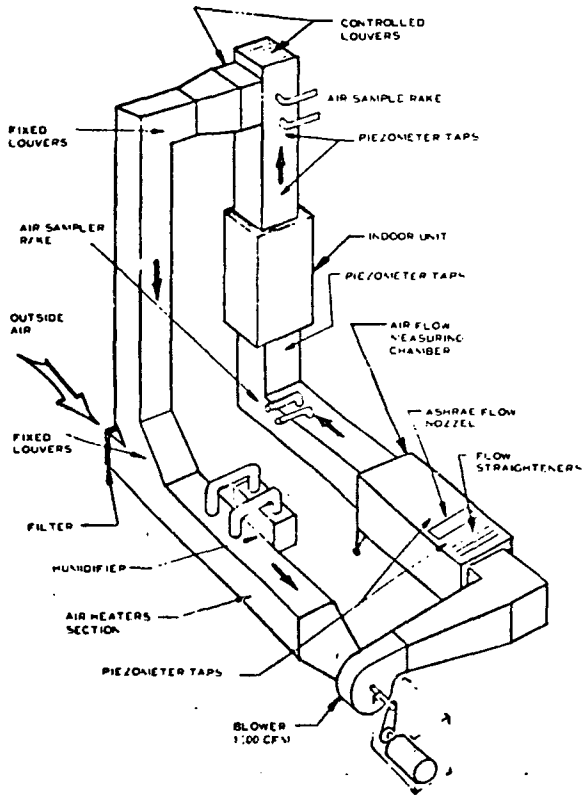

Figure 12. Indoor/Outdoor Unit Test Facilities

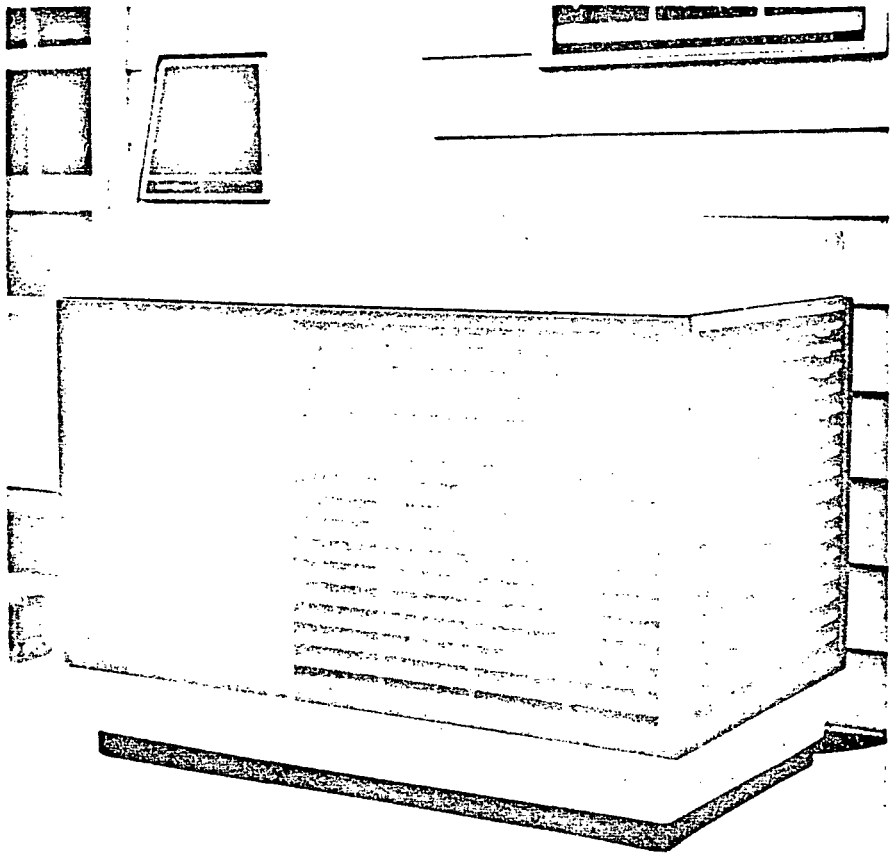

Figure 13. Prototype 2 Outdoor Unit Configuration

to package the unit. The selected configuration is shown in Figure 13. As shown, the unit has an extension at one end of the cabinet where the combustor/engine/compressor assembly is located. Subsequent development phases will reduce the length of the combustor/engine/compressor assembly by using more compact components and instrumentation.

MARKET PROJECTIONS

Throughout the Stirling/Rankine HAHP development program, the General Electric Company has been conducting market and business assessment studies in parallel with the hardware development activity. The studies have examined the potential market for all heat activated heat pump concepts (including absorption, Brayton/Rankine, Rankine/Rankine, etc.), the potential penetration of the Stirling/Rankine HAHP into the potential market, the economics of premium pricing the HAHP, the level of investment required by the manufacturer, and the expected return on investment, internal rate of return, cash flow, and other financial measures.

A key element of this activity has been the projection of the potential market for the Stirling/Rankine HAHP. To forecast the market potential, a data base was formed using U.S. Census Bureau data, industry and manufacturer's information, and internal General Electric data bases.

Figure 14 shows the regional divisions of the U.S. market utilized for projecting the market, the availability of natural gas, current and projected new construction and total housing inventory and the building load/climate requirements that must be met by the HAHP product.

A conservative approach was taken to size the market potential. Figure 15 illustrates the progressive dilution approach used to arrive at a market forecast. The year by year projected market consists of both the existing inventory (replacements), and new construction. These were projected for the entire HVAC industry, covering all regions and all size and type buildings. This total market was reduced for all regions by selecting buildings suitable for a residential class product and a derived light commercial class product. Next, this market was further reduced to those buildings potentially served by natural gas with forced warm air type heating/cooling systems.

Although this would represent the total potential market for the heat activated heat pumps, the market was further reduced by assuming that, for new construction, only those residential and light commercial structures which would otherwise be provided with a gas furnace and an electric air conditioner would be the prime market for the HAHP. In the replacement market for existing structures, it was assumed that the market was limited to those structures which had: (1) gas furnaces scheduled to be replaced, but where electric air conditioners had not yet been installed; and (2) those structures where the electric air conditioner was to be replaced.

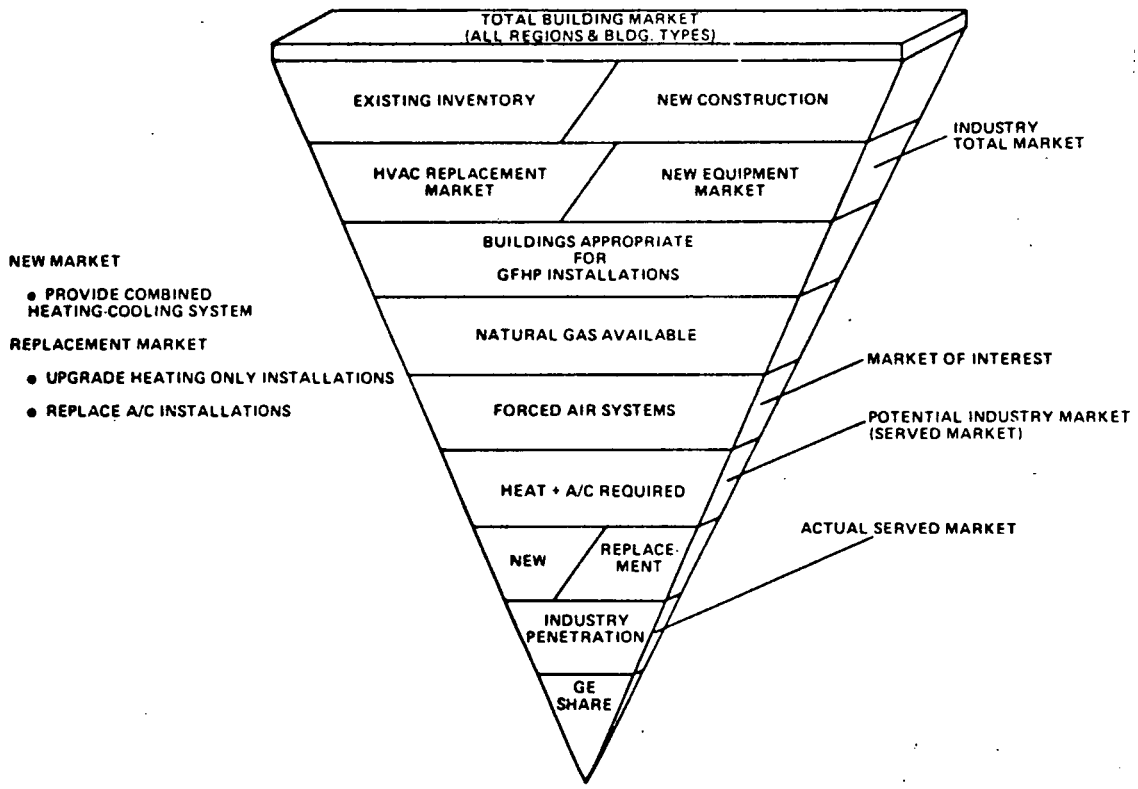

Figure 15. Market Sizing Model

The final step in projecting the HAHP market is to define the penetration potential of the HAHP into the potential market. Historical data was used to project the probable penetration of all heat activated heat pumps as a function of years after introduction to the public. The projection was also done for three scenarios; a nominal penetration; a high penetration; and, a low penetration. Figure 16 shows historical data of industry shipments for several HVAC products as a function of the number of years after introduction. As shown, products which had a low initial cost and offered a unique capability (such as a room air conditioner), or products which are heavily promoted by the industry (such as an electric warm air furnace) enjoyed very rapid growth after their introduction. This would represent a high scenario for a sales forecast. Products which offered more efficient operation with a higher initial price, such as unitary air conditioning, and which was promoted by industry, enjoyed nominal growth rates. Finally, products which had initial technical problems, and/or were not aggressively promoted by the industry attained a relatively low rate of product penetration. In this case, the electric heat pump is the example, although penetration of the electric heat pump into the HVAC market has accelerated rapidly in the last few years due to refinements in the product, the scarcity of natural gas in many locations, and aggressive promotion by utilities and equipment manufacturers.

By applying these historical guidelines to the projected potential market, HAHP shipments as a function of number of years after introduction were derived. These are shown in Figure 17. As indicated in the figure, a substantial annual sales volume of 100,000 units/year can be envisioned for heat activated heat pumps within 10 years after their introduction. If an aggressive campaign to introduce the product much more rapidly is undertaken, sales approaching 250,000 units/year may be realized.

CONCLUSIONS

General Electric has concluded that sales forecasts of the nominal or high scenario amply justify the development and eventual marketing of the Stirling/Rankine HAHP, and other high efficiency heat activated heat pump concepts. It appears that product investment requirements will be returned within 10 years after the product is introduced, and that substantial savings to the natural resources of the nation can be realized with the introduction of these high efficiency products.

The benefit to the nation is, of course, the goal of the Department of Energy and the Gas Research Institute in sponsoring the development of heat activated heat pumps. Table 3 summarizes the expected total space conditioning HVAC market, in terms of energy, from 1985 through the year 2000. As shown, the potential market of the heat activated heat pump could approach 20% by the turn of the century, for a nominal market penetration scenario. This would yield energy savings to the nation by the turn of the century approaching 1 Quad, with a

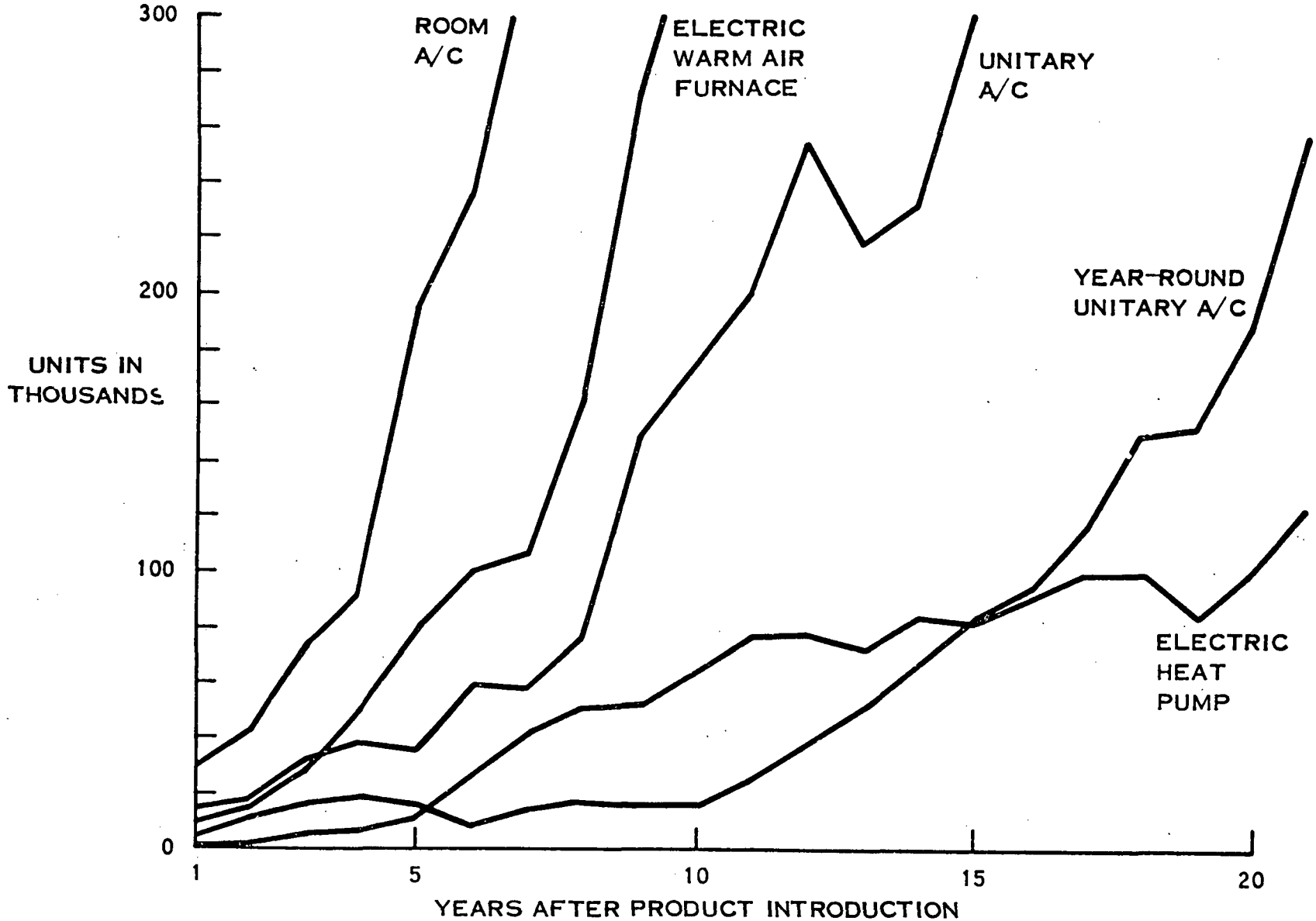

Figure 16. Historical HVAC Product Shipment Trends

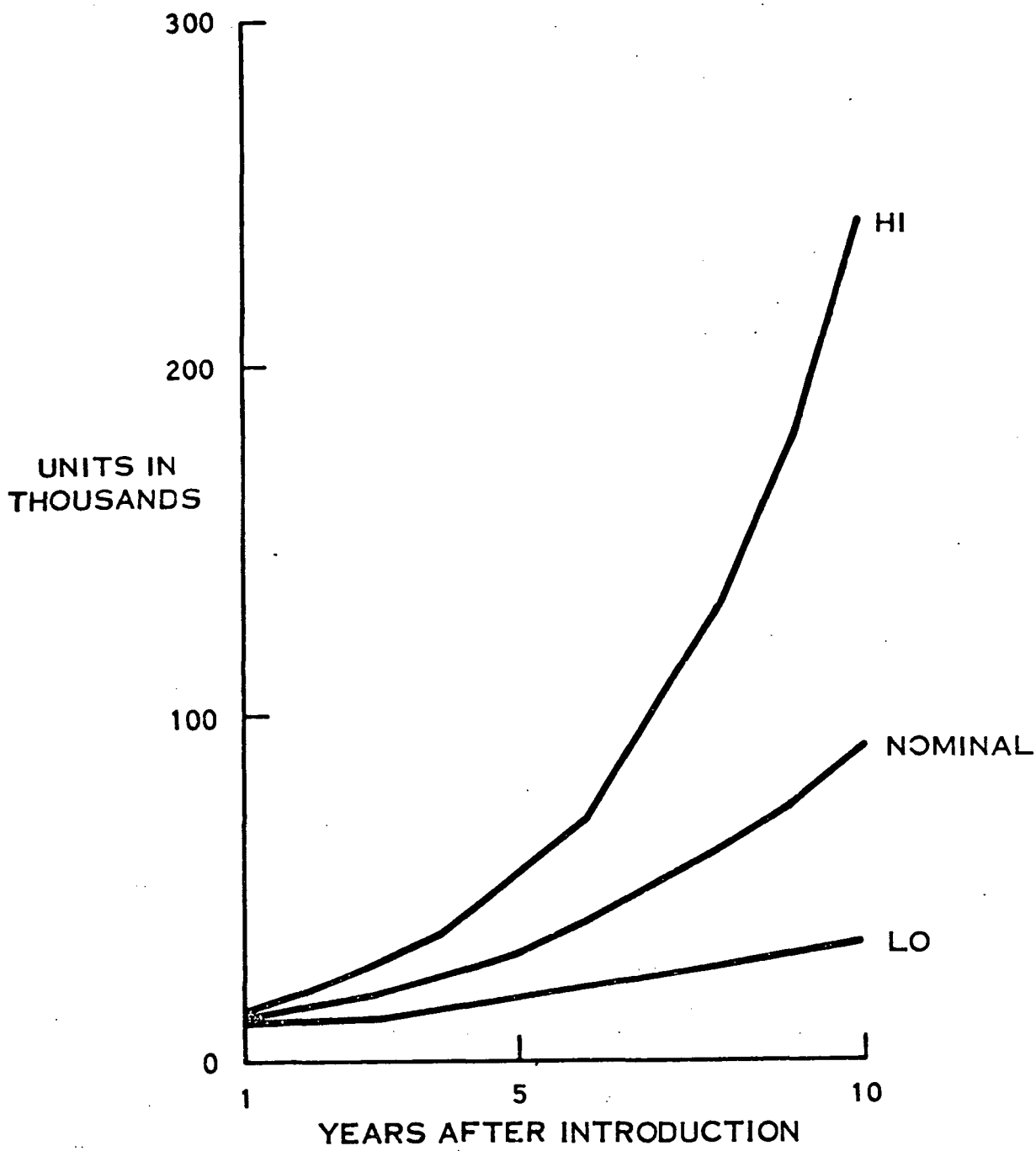

Figure 17. Projected Gas Heat Pump Industry Shipments

Table 3. Gas Heat Pump Market/Energy Penetration

	1985	1990	2000
TOTAL MARKET (10^{12} BTU)	200 TO 300	1,500 TO 2,200	3,200 TO 4,600
PENETRATION (10^{12} BTU)	3 TO 4	46 TO 67	600 TO 840
PERCENT OF MARKET PENETRATED	1.4	3.1	18.2
CUMULATIVE ENERGY CONSERVED (10^{12} BTU	3 TO 7	50 TO 120	470 TO 1,130

much higher potential realized if the more rapid high penetration scenario is achieved.

Thus, in addition to savings provided the consumer in his electric and gas utility bills, benefits to the gas and electric utilities for reducing and leveling their electric and gas loads, and the profit potential to manufacturers, the nation could enjoy substantial energy savings in residential and commercial space conditioning through the use of the heat activated heat pump. These motivations provide the impetus for continued product development and market testing for the HAHP by the Department of Energy, the Gas Research Institute, and the General Electric Company.