849044

TEST RESULTS FOR A STIRLING-ENGINE-DRIVEN HEAT-ACTUATED HEAT PUMP BREADBOARD SYSTEM

T.M. Moynihan
R.A. Ackermann

MECHANICAL TECHNOLOGY INCORPORATED
Latham, New York 12110

ABSTRACT

A Free-Piston Stirling Engine prime mover has been coupled to a Rankine-cycle, linear-resonant refrigerant compressor through a diaphragm-actuated hydraulic coupling. The system, developed at Mechanical Technology Incorporated, is a heat-actuated heat pump (HAHP) that was developed for residential applications. This paper describes the breadboard system, and presents the data obtained during testing the past year. The system was successfully tested at four designated operating points* in over 250 hours of operating time, during which time extensive data was recorded that characterizes the system's performance/operation over the specified operating range, and defines the future product potential.

INTRODUCTION

In December 1979, Mechanical Technology Incorporated (MTI) entered into a program with the Department of Energy and Oak Ridge National Laboratory to develop a Free-Piston Stirling Engine (FPSE)-driven heat pump to demonstrate product potential. The program was structured to design and fabricate a refrigerant compressor that could be coupled to an existing FPSE. During this same period, MTI was developing an advanced FPSE with a private sponsor; this engine was designated as the prime mover for the Breadboard Heat Pump (shown in Figure 1).

The Breadboard System consists of an FPSE, a diaphragm-actuated hydraulic transmission, and a linear-resonant Rankine refrigerant compressor. The FPSE power module (assembly located above the aft gas spring in Figure 1) consists of a recuperated natural-gas combustor, a monolithic-finned heater head, a motor-driven displacer, and thermodynamic heat exchanger components, i.e., cooler and regenerator. Located below the aft gas spring are the hydraulic transmission and compressor.

Hermetic separation between the engine working gas (helium) and refrigerant (R-22) is achieved by employing a flexible metal diaphragm between the power module and hydraulic transmission (Figure 2). Engine power is transferred to the compressor through the volumetric displacements of the diaphragms, and corresponding displacement of oil in the hydraulic transmission. The motion of the diaphragm is produced by the pressure wave in the engine.

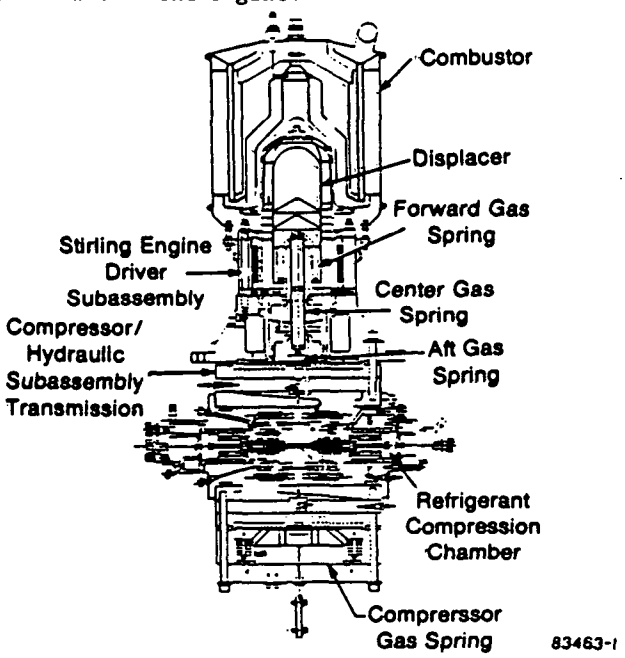

Fig. 1 EM4 with Compressor HAHP Breadboard (Diaphragm Displacement Amplitude 3.75 in.^{3})

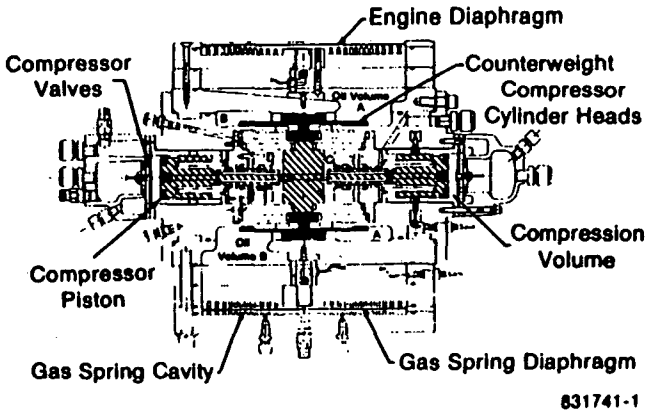

Fig. 2 HAHP Compressor Assembly

*95, 80, 47, and 17°F (35, 27, 8, and -8°C)

As may be seen in Figures 1 and 2, the compressor operation proceeds with an increase in the engine pressure amplitude produced from the shuttling of the engine working fluid between the hot and cold working spaces of the engine that deflects the diaphragm into oil volume A. Because the oil is incompressible, and the quantity of oil is constant, the power piston is forced to the left, thus compressing the refrigerant in the left-hand compression volume, and expanding the refrigerant in the right-hand compression volume. The motion of the power piston to the left also displaces the oil in volume B, forcing the gas spring diaphragm to deflect downward, and compressing the gas in the gas spring (Figure 2). The reactive forces from the gas spring and compression volume provide the restoring force for the compressor piston, and produce the resonant characteristics of the compressor. The reciprocating motion of the compressor piston produces the suction and discharge strokes that pump the refrigerant from the suction to the discharge manifolds.

TEST PROCEDURE

During MTI laboratory testing, the suction and discharge manifolds are plumbed to a refrigerant calorimeter test loop (shown in Figure 3).

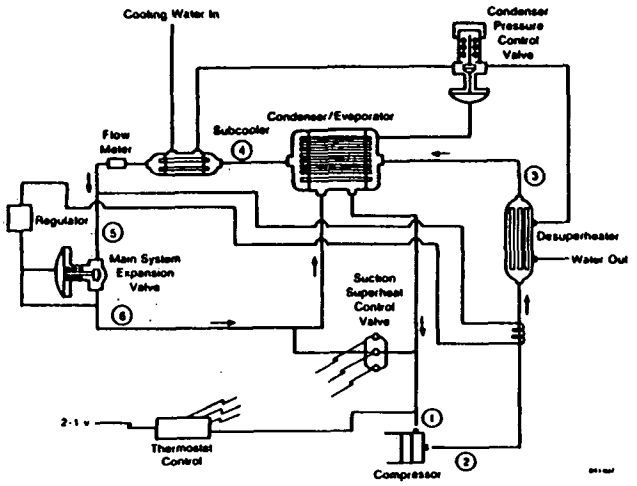

Fig. 3 HAHP Refrigerant Loop

Ambient operating conditions for the heat pump are simulated on the loop by controlling the cooling water through the desuperheater, which extracts heat from the compressor discharge gas, and fixes the condenser saturation pressure. The condenser is thermally coupled to the evaporator in a shell and tube heat exchanger that transfers heat from the discharge flow to the expanded suction flow. From the condenser the refrigerant passes through a subcooler to ensure a liquid flow through the system flow meter. The evaporator pressure is controlled by a pressure-regulated expansion valve. The degree of superheat entering the compressor suction is controlled by passing wet refrigerant upstream of the evaporator, and mixing it with the refrigerant leaving the evaporator. The refrigerant state points for the loop are shown in Figure 4.

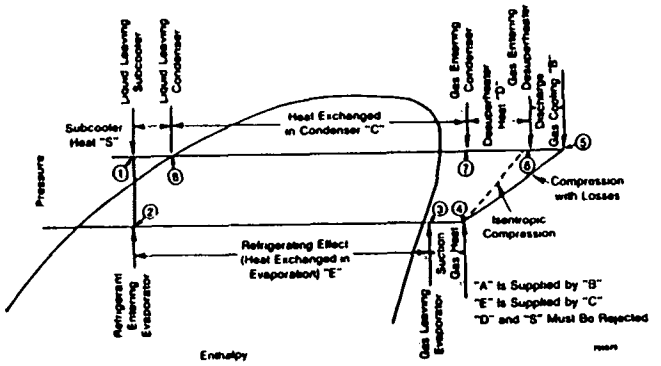

Fig. 4 Regenerative Test Loop Heat Balance

The Breadboard System is instrumented to provide both steady-state and dynamic measurements. The instrumentation included for the system (shown in Figure 5) provides energy and power measurements for each of the working volumes of the combustor, engine, hydraulic transmission, and compressor, and provides quantitative data for each of the individual system components, enabling a definitive evaluation of performance. The refrigerant loop and instrumentation have allowed the Breadboard System to be run at the four ambient conditions, as well as providing data on the system's performance over the required heating and cooling range. The designated operating points are given in Table 1.

Table 1
HAHP Cooling and Heating Design Points

Outdoor Temperature	35°C	8°C
Heating/Cooling Load (watts)	10,557	4,106
Suction Pressure (MPa)	0.63	0.57
Discharge Pressure (MPa)	1.91	1.30
Evaporator Temperature (°C)	7.2	4.5
Condenser Temperature (°C)	49.3	33.4
Freon Flow Rate (kg/hr)	258.5	50.0

TEST RESULTS

Test Objectives

The objective of testing the HAHP Breadboard System was to evaluate the system's performance at the four operating points designated to simulate ambient conditions for temperatures of 95°F (35°C), 80°F (27°C), 47°F (8°C), and 17°F (-8°C). Performance was assessed by measuring the heating and cooling capacity of the heat pump, and measuring the performance of the hydraulic transmission and compressor with the instrumentation described.

Test Results

Figure 6 gives the heating and cooling load lines used to evaluate performance. The capaci-

ties measured with the Breadboard System are superimposed on these load lines. At this stage in its development, the Breadboard System was found to operate stably over the entire operating range; however, it was low in capacity at the higher load points. The shaded areas on Figure 6 represent the operating range of the Breadboard System, over which the system was fully capable of being modulated by controlling the amplitude of the engine displacer. The most recent capacity data obtained is:

Heating Mode Data @ 47°F (8°C) Day:
54,000 Btu/hr (15,836 watts)

Cooling Mode Data @ 95°F (35°C) Day:
22,000 Btu/hr (6,452 watts)

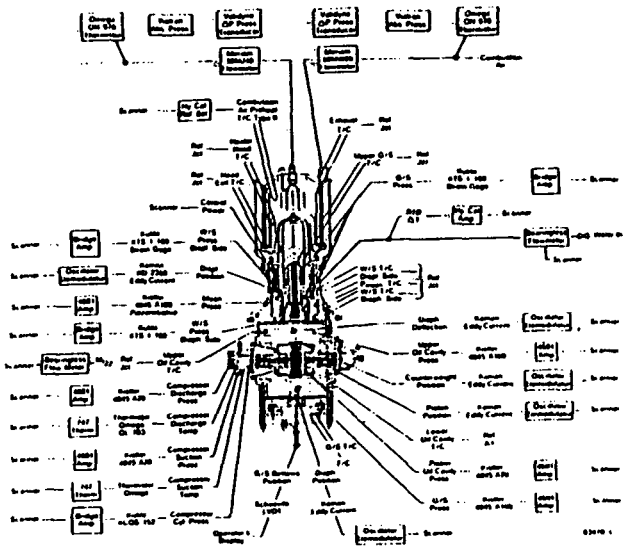

Fig. 5 HAHP Instrumentation Schematic

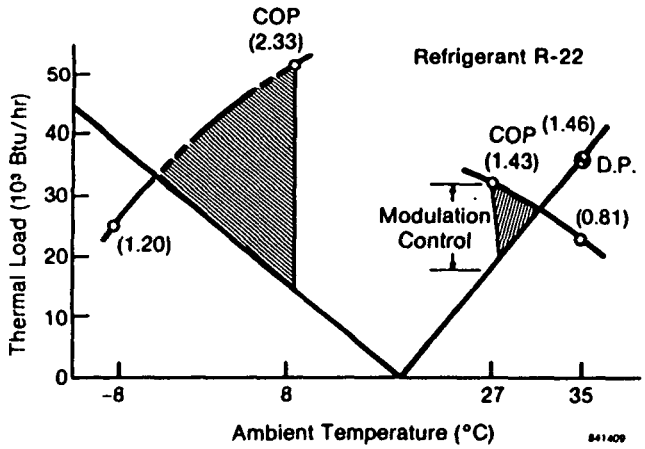

Fig. 6 Residential Heating and Cooling Load Lines

As shown in Figure 7, the lower-than-expected cooling mode capacity can be attributed to the stiffness of the load, i.e., the losses in the hydraulic transmission and compressor. The curves in Figure 7 represent the predicted stroke ratio as computed from the analytical engine/compressor operating characteristics. The dashed curve represents the predicted compressor load characteristics for the 95°F (35°C) ambient loading conditions. As shown, the predicted 95°F (35°C) design point was represented by a stroke ratio of 1.0, a compressor stroke of 19 mm, and an engine PV power of 2900 watts. The measured compressor load line (also shown in Figure 7) is steeper than what was predicted. The figure shows that the steeper load line results in a higher stroke ratio to drive the compressor. Mechanically the engine is limited by the displacer reaching its stroke limit before the compressor piston reaches its design stroke; thus, the engine cannot develop its rated PV power, and the refrigerant mass flow is reduced. The cause of this is can be seen in Table 2, which shows that the measured lower-end losses in the hydraulic transmission and compressor at the 95°F (35°C) operating point are 89% higher than predicted.

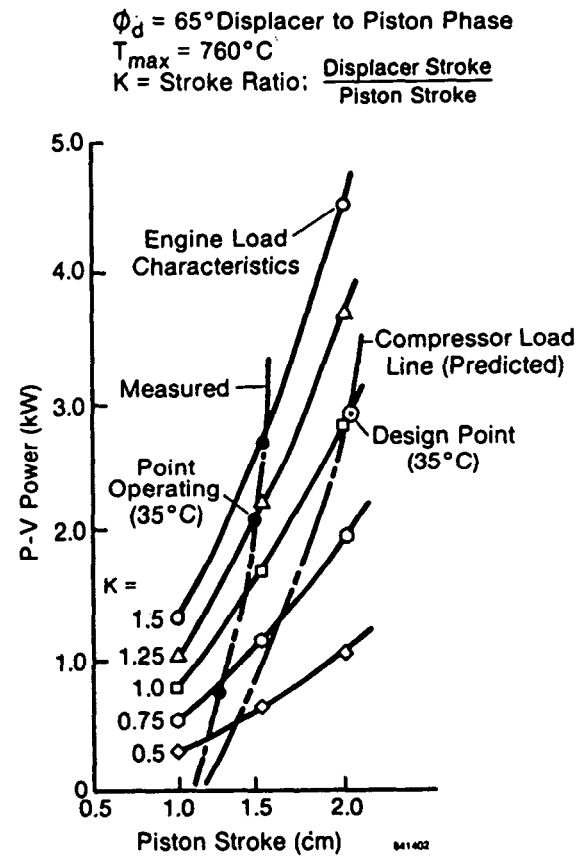

Fig. 7 Initial Engine Operating Characteristics for the HAHP Breadboard System

Table 2
Comparison of Lower-End Losses With Predictions

Loss (Watts)	Ambient Temperature 47°F (8°C) Pred.	47°F (8°C) Meas.	95°F (35°C) Pred.	95°F (35°C) Meas.
Piston	-	-	102.0	-
• Chevron Seal	54.2	-	220.0	-
• Comp Piston Seal	73.0	-	46.0	-
• Pumping	17.0	-	176.0	-
Subtotal	205.2	340.0	544.0	775.0
Hydraulic				
• Viscous	N*	-	N*	-
• Porting	-	-	-	-
Subtotal	-	100	-	295.0
Gas Spring	21.0	60.0	114.0	175.0
Total	226.2	500.0	658.0	1245.0

*Negligible

Further verification that the higher lower-end losses result in a reduced engine PV power was demonstrated analytically by substituting the measured load characteristics into MTI's design codes, and calculating a new engine operating point. Table 3 shows that when this is done good agreement exists between the calculated and measured engine operating characteristics.

Table 3
HAHP - Measured Versus Predicted Engine Performance

Engine Parameter		95°F (35°C) Ambient Condition Test Meas.	Code Pred.
Mean Head Temp	(°C)	653	653
Mean Pressure	(Bar)	59	59
Frequency	(Hz)	58.6	58.6
Piston (Compressor Stroke	(mm)	16.34	16.34
Displacer Phase Angle	(°)	65.1	65.1
Displacer Stroke	(mm)	19.22	19.22
Stroke Ratio	(mm)	1.18	1.18
Piston PV Power	(W)	2155	2186

The present state of development of the HAHP compressor efficiency is shown in Figure 8. As illustrated, the transmission losses are larger than what was predicted, resulting in an overall compressor mechanical efficiency* of 58% versus a design point efficiency of 70%. The continuation of the development effort will be to isolate and reduce the transmission losses so that the design level efficiency and capacity are achieved.

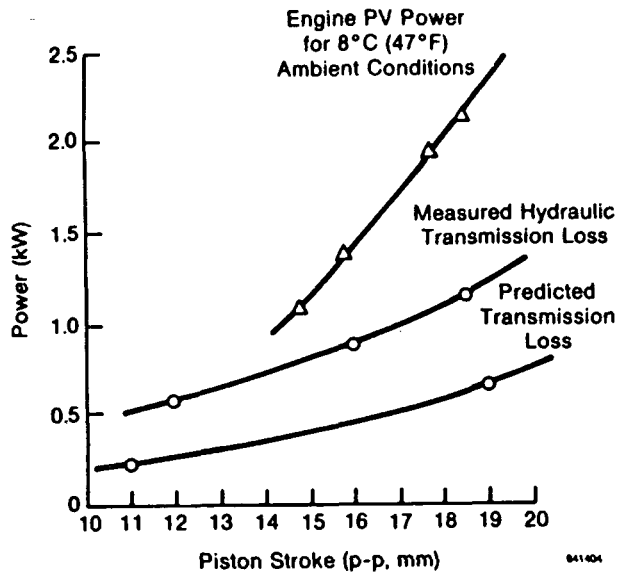

Fig. 8 Breadboard Operating Characteristics

CONCLUSIONS

As a result of the testing conducted on the Breadboard System, the following conclusions have emerged:

- the system is stable and controllable (as demonstrated with more than 250 hours of operation in both steady-state and transient modes);
- no mechanical failures of either the engine, compressor, or hydraulic transmission have occurred in over 500 hours of component and Breadboard System operation;
- experience with contoured diaphragms has been good, e.g., at design stress, one pair of diaphragms accumulated 35.0 million cycles with no sign of fatigue (no contoured diaphragm has yet experienced a fatigue failure in this program);
- the breadboard capacity is presently achieving only 60% rated capacity at the 95°F (35°C) cooling design point due to higher-than-predicted losses in the compressor and oil transmission (the current effort is to reduce these losses); and,
- the system continues to exhibit the potential for good performance.

*Actual Work Performed on Freon
∮Pdv work on Diaphragm