FINAL REPORT

A HIGH SEASONAL PERFORMANCE FACTOR GAS HEAT PUMP FOR THE NORTH CENTRAL UNITED STATES

APPENDIX VOLUME V

LARGE SIZE MODEL TECHNICAL EFFORT

Prepared By: Mechanical Technology Incorporated
Prepared For: Consolidated Natural Gas Service Company Inc.
And The U.S. Department of Energy
Prepared Under: DOE Prime Contract EY-76-C-02-2883
January, 1980

Consolidated Natural Gas Service Company Inc.

Mechanical Technology Inc.

MTI 79TR68

FINAL REPORT

A HIGH SEASONAL PERFORMANCE FACTOR GAS HEAT PUMP FOR THE NORTH CENTRAL UNITED STATES

Appendix Volume V

LARGE SIZE MODEL TECHNICAL EFFORT

Prepared By: Mechanical Technology Incorporated
968 Albany-Shaker Road
Latham, New York 12110

Prepared For: Consolidated Natural Gas Service Company Inc.
Research Department
11001 Cedar Avenue
Cleveland, Ohio 44106

And The U.S. Department of Energy
Consumer Products Division
Technology & Consumer Products Branch
20 Massachusetts Avenue
Washington, D.C. 20545

Prepared Under: DOE Prime Contract EY-76-C-02-2883

January, 1980

NOTICE

This report was prepared as an account of work sponsored by the United States Government and Consolidated Natural Gas Service Company Inc. Neither the United States nor the United States Department of Energy, nor Consolidated Natural Gas Service Company Inc., nor any of their employees, nor any of their subcontractors, or their employees, makes any warranty, express or implied, or assumes any legal liability or responsibility for the accuracy, completeness or usefulness of any information, apparatus, product or process disclosed, or represents that its use would not infringe privately-owned rights. Mention of commercial products, their manufacturers, or their suppliers in this publication does not imply or connote approval or disapproval of the product by the U.S. Department of Energy or Consolidated Natural Gas Service Company Inc.

Appendices to Final Report

DEMONSTRATION OF A HIGH SPF GAS HEAT PUMP
FOR THE NORTH CENTRAL UNITED STATES

Table of Contents

Appendix Volume	Title
I	7-1/2 Ton Technical Demonstration
II	7-1/2 Ton Market Potential Study
III	7-1/2 Ton Comparative Cost of Ownership Study
IV	System Cost Analysis
V*	Large Size Model Technical Effort
VI	Large Size Model Market Potential Study
VII	Large Size Model Comparative Cost of Ownership Study
VIII	Business Potential Study

*Contained herein.

APPENDIX - VOLUME V

TABLE OF CONTENTS

Section		Page
	LIST OF FIGURES	vi
	LIST OF DRAWINGS	x
	LIST OF TABLES	xi
1.0	ANALYSIS OF SYSTEM SIZE VERSUS SYSTEM COST, LARGE SIZE MODEL	1-1
	1.1 Introduction	1-1
	1.2 Application of Scaling Techniques	1-3
	1.3 Qualitative Cost Analysis of Components	1-5
	1.4 Impact of Cost Variations on Market Acceptance	1-8
2.0	SYSTEM DESIGN ANALYSIS	2-1
	2.1 Initial Analysis	2-1
	2.1.1 System Description	2-1
	2.1.2 System Performance Analysis	2-14
	2.1.3 Recommendations for Second Iteration of the LSM System Design	2-22
	2.2 Second System Analysis Iteration	2-23
	2.2.1 Changes Made to Initial System	2-23
	2.2.2 Parametric Studies	2-40
	2.2.3 Conclusions from the Second LSM System Analysis	2-52
	2.2.4 Recommendations to Advisory Board, October 1978	2-54
	2.3 Additional System/Modeling Analysis	2-56
	2.3.1 Heat Exchanger Modeling	2-56
	2.3.2 Refrigerant Cycle Modeling	2-60
	2.3.3 Prime Mover Concept Modeling	2-64
	2.3.4 System Optimization for Office Building Application	2-68
	2.3.5 Trade-Off Study on Prime Mover Coupling Concepts	2-70
	2.3.6 Alternate Driver Study	2-77
	2.3.7 System Optimization Results for Economy Motel Application	2-98

TABLE OF CONTENTS (Cont'd)

Section		Page
3.0	COMPONENT DESIGN EFFORT - TASK VI-3	3-1
	3.1 Introduction	3-1
	3.2 Refrigerant Compressor	3-1
	3.2.1 Alternatives Considered	3-1
	3.2.2 Refrigerant Selection	3-1
	3.2.3 Compressor Performance	3-6
	3.2.4 Aerodynamic Design	3-6
	3.2.5 Compressor Control	3-20
	3.2.6 Bearings and Seals	3-22
	3.2.7 Drive Train	3-22
	3.3 Refrigerant Heat Exchangers	3-23
	3.4 Motor/Generator	3-23
	3.4.1 Multiple Function	3-23
	3.4.2 Design	3-24
	3.4.3 Drive Train	3-24
	3.5 Steam Expander	3-24
	3.5.1 Design Alternatives and Optimization	3-24
	3.5.2 Turbine Design	3-34
	3.5.3 Control and Operating Considerations	3-43
	3.5.4 Performance	3-47
	3.6 Steam Generator	3-47
	3.6.1 Alternatives Considered	3-47
	3.6.2 Pass Arrangement/Temperature Distribution	3-60
	3.6.3 Control Concept	3-60
	3.6.4 Start-Up Procedure	3-60
	3.6.5 Shutdown Procedure	3-67
	3.6.6 Mechanical Construction	3-67
	3.6.7 Safety Considerations and Product Certification	3-67
	3.7 Regenerator	3-68
	3.8 Steam Condenser	3-70
	3.8.1 Sizing Double-Bundle Condenser	3-70
	3.8.2 Hot Well Deareation (Degasing)	3-70

TABLE OF CONTENTS (Cont'd)

Section		Page
	3.8.3 Removal of Noncondensables	3-70
3.9	Feed Water Treatment	3-71
	3.9.1 Water Quality Requirements	3-71
	3.9.2 Temperature Limitations on Condensate Polishing	3-76
3.10	Lube Oil System	3-76
	REFERENCES	R-1

ATTACHMENT

A	Flow Charts for System Model	A-1
B	Description of Box's Optimization Algorithm	B-1
C	Mechanical Drive Concept Model - Program Listing	C-1
D	Electrical Drive Concept Model - Program Listing	D-1
E	Cleveland Office Building Cooling and Heating Loads	E-1
F	Other Pertinent Information - Drawings not Referenced	F-1

LIST OF FIGURES

Number		Page
1.1-1	Illustration of Unit Size Impact Upon Cost Per Ton. . . .	1-2
1.4-1	The Variations of Unit Cost of the Unitary Air-to-Air HSPF Heat Pump versus Unit Size	1-10
2.1-1	Simplified Overall System Schematic	2-2
2.1-2	Temperature Control Schedule.	2-4
2.1-3	Variation of Steam Cycle Thermal Efficiency with Outdoor Ambient Temperature Based on the Hot Water Delivery Temperatures of Figure 2.1-2	2-6
2.1-4	Part-Load Performance of Steam System	2-7
2.1-5	Example Power Cycle State Points.	2-8
2.1-6	Assumed Variation of Turbine Performance with Pressure Ratio	2-10
2.1-7	Compressor Efficiency versus Volume Ratio	2-11
2.1-8	Compressor Volume Ratio and Refrigerant System COP. . . .	2-12
2.1-9	Part-Load Performance Refrigerant System.	2-13
2.1-10	System Performance Analysis Approach.	2-15
2.1-11	Equipment Performance Subroutine.	2-16
2.1-12	Yearly Heat Balance	2-21
2.2-1	System Design and Performance Factors which Influence Marketability of the LSM.	2-24
2.2-2	Addition to First Model	2-26
2.2-3	125-Ton Gas-Fired Heat Pump System.	2-27
2.2-4	COP_C versus Ambient Temperature for C1 Compressor - Pumping Heat from the Ambient and Discharging it into the Chilled Water Circuit of C2 Compressor	2-29
2.2-5	Crossover Piping Schematic for Dual Compressor Operation in a Two-Stage Heat Pumping Configuration . .	2-31
2.2-6	Cooling COP Correction Factor for Single and Combined Factor for Dual Compressor Mode with Larger Compressor Size = 2x Smaller Compressor	2-32
2.2-7	General Relationship of HVAC System Mechanical and Electrical Input Requirements as HVAC Cooling Load Varies - For Steam Rankine Cycle Driven Chiller	2-34
2.2-8	Full Size Turbine - Totally Self-Sufficient with Respect to HVAC System Energy Requirements.	2-35

LIST OF FIGURES (Cont'd)

Number		Page
2.2-9	Reduced Size Turbine-Purchasing Electricity for Part of HVAC Parasitic Loads During High A/C Load Conditions.	2-36
2.2-10	Reduced Size Turbine - Here the Generator Functions as Motor to Assist Turbine when HVAC System Mechanical Load Exceeds Turbine Output	2-37
2.2-11	Reduced Size Turbine - At a Turbine Size of 90 hp the Maximum Generator Load (G_m) also Equals the Maximum Load on Generator when it is Functioning as a Motor (M_m).	2-38
2.2-12	Comparative Annual Energy Costs	2-42
2.2-13	Heat Exchanging Equipment Size Requirement as a Function of Steam Turbine Driver Size	2-44
2.2-14	Rotating Machinery Size Requirements as a Function of Steam Turbine Driver Size. (Base Loaded and Modulated).	2-45
2.2-15	Anticipated Trends in System Cost as a Function of Turbine Size and Mode of Control.	2-47
2.2-16	Annual Energy Cost Savings per Total Installed Driven Power; Includes Turbine and Generator Power Rating. . .	2-48
2.2-17	Annual Energy Cost Sensitivity to Increase in Energy Rates - 90 hp Base-Loaded Turbine Driver.	2-49
2.2-18	Annual Energy Cost/Heat Pumping Source Sensitivity for 90 hp Base-Loaded System and Electric Motor Driven Double Bundle Chiller using a Gas Boiler for Supplementary Heat.	2-51
2.2-19	Annual Energy Cost Savings Showing Actual Indicated Savings and Potential Savings	2-55
2.3-1	Schematic of Heat Exchanger Flows and Definition of Terms	2-58
2.3-2	Refrigerant Pressure Enthalpy Diagram Showing Refrigerant Cycle State Points.	2-61
2.3-3	CNG Compressor Performance R-12 Refrigerant	2-62
2.3-4	Hardware Schematic of Typical Mechanical Coupling Concept	2-65
2.3-5	Flow Chart for Typical Coupling Concept	2-66
2.3-6	Hardware Schematic of Typical Electrical Coupling Concept	2-67
2.3-7	Concept I - No Turbine, Conventional Electric Driven Chiller.	2-72

LIST OF FIGURES (Cont'd)

Number		Page
2.3-8	Mechanical Coupling Concepts II and III	2-73
2.3-9	Mechanical Coupling Concepts IV and V	2-74
2.3-10	Electrical Coupling Concepts VI and VII	2-75
2.3-11	Electrical Coupling Concepts VIII and IX.	2-76
2.3-12	Thermal Efficiency Comparison of Alternate Drivers (Including All Required Power for Accessories).	2-80
2.3-13	Recoverable Waste Heat Comparison of Alternate Drivers. .	2-81
2.3-14	Flow Chart Additions for Alternate Driver Study to Include External Heat Pumping and Modulated Driver Load Operation	2-84
2.3-15	Heating Requirement Distribution and Average Heating Load versus Ambient Temperature for Economy Motel Which Requires 125 Ton of A/C Load - No Process Loads Included.	2-88
2.3-16	Heating Mode Performance Factors for Engine/Generator Sets with Waste Heat Recovery. All Engines are Modulated on Power Output to Match Their Recovered Waste Heat to the Heating Load.	2-89
2.3-17	Heating Mode Performance Factors for Various Engine/ Generator Sets with Waste Heat Recovery. All Engines are Base Loaded at Full Power Output.	2-90
2.3-18	Primary Equipment Performance Factors of Heat Pump Systems Showing Effects of Various Types of Drivers . .	2-93
2.3-19	Relative Primary Fuel Requirements for a 125 Ton Chiller Using Various Types of Drivers.	2-94
2.3-20	External Source Heat Pumping via Two Stages, Showing Stage COP and Overall COP. Assuming Both Stages Operate at Full Capacity.	2-96
2.3-21	External Source Heat Pumping Comparing Overall Performance of Two-Stage Heat Pumping with Single-Stage Heat Pumping	2-97
3.2.1	CNG Compressor Performance R-12 Refrigerant	3-7
3.2-2	Part-Load Chiller Performance Showing How the Compressor Responds to Part-Load Conditions of the System	3-8
3.2-3	Specific Speed (N_s), Specific Diameter (D_s) Relationship for Centrifugal Compressor	3-9
3.2-4	CNG Compressor Flow Path R-12; N = 24,049 rpm	3-10
3.2-5	CNG Compressor Blade Thickness.	3-11

LIST OF FIGURES (Cont'd)

Number		Page
3.2-6	Blade Wrap Angle - θ.	3-12
3.2.7	CNG Compressor Rotor Design	3-13
3.2.8	CNG Compressor Rotor Blade Section X-X.	3-14
3.2.9	CNG Compressor Rotor Blade Section Y-Y.	3-15
3.2-10	CNG Compressor Rotor Blade Section Z-Z.	3-16
3.2-11	CNG Compressor R-12 Exit Scroll Area Schedule	3-17
3.5-1	Adiabatic Section Efficiencies for an 8-Stage, 90-hp Turbine with Four Single Stages in the High-Pressure Section with the First Stage Being the Governing Stage and Four Single Stages in the Low-Pressure Section Using Reheat.	3-26
3.5-2	Cross Section of Rotary Positive Displacement Steam Expander.	3-35
3.5-3	Specific Speed (N_S), Specific Diameter (D_S) Relationship for Axial Impulse Turbines	3-37
3.5-4	Turbine Bucket Geometry for Curtis Wheel - Row #1	3-39
3.5-5	Turbine Bucket Geometry for Curtis Wheel - Intermediate Row (Stationary).	3-40
3.5-6	Turbine Bucket Geometry for Curtis Wheel - Row #2	3-41
3.5-7	Turbine Nozzle Geometry for Wheel #2.	3-42
3.5-8	Turbine Bucket Geometry for Wheel #2.	3-45
3.5-9	Cross Section of Three-Stage Turbine.	3-46
3.5-10	Basic Steam Rankine Cycle Thermal Efficiency at Part Load and at Various Steam Condenser Temperatures. . . .	3-48
3.5-11	Effect of Exhaust Pressure Variation on Stage 3 Efficiency.	3-49
3.6-1	Steam System Schematic.	3-50
3.6-2	Return Temperature (T_2) as a Function of Turbine Inlet Conditions.	3-51
3.6-3	Reheat Pressure as a Function of Turbine Inlet Conditions.	3-52
3.6-4	Feed Water Rate as a Function of Turbine Inlet Conditions.	3-53
3.6-5	Feed Water Temperature as a Function of Turbine Inlet Conditions.	3-54
3.6-6	Schematic Flow/Temperature Conditions in Monotube Steam Generator	3-61
3.9-1	Steam System - Feed Water Treatment	3-74

LIST OF DRAWINGS

Number		Page
1	CNG Gas-Fired Heat Pump Model "B".	2-28
2	Schematic - CNG Process System	3-2
3	Schematic Lube Oil - CNG	3-3
4	Assembly Layout - Plan View CNG Turbomachinery	3-4
5	Layout - CNG Compressor Module	3-21
6	Boiler - External Blower	3-62
7	Boiler - Integral Blower	3-64
8	Boiler Schematic - External Blower	3-66

LIST OF TABLES

Number		Page
1.2-1	SCALING EXPONENTS FOR VARIOUS TYPES OF EQUIPMENT.	1-4
1.2-2	MAJOR COMPONENTS AND COSTING USED IN QUALITATIVE COST STUDY.	1-6
1.4-1	COMPARATIVE COSTS FOR DIFFERENT UNIT SIZES.	1-9
2.1-1	DATA SUMMARY FOR CLEVELAND OFFICE BUILDING WITHOUT AN ECONOMIZER CYCLE	2-18
2.1-2	DATA SUMMARY OF COINCIDENT COOLING AND HEATING LOADS FOR CLEVELAND OFFICE BUILDING	2-19
2.2-1	EFFECT OF COMPRESSOR OPERATING MODE ON CHILLER COMPRESSOR POWER REQUIREMENTS	2-33
2.2-2	SUMMARY OF BUILDING HVAC DATA USED IN PARAMETRIC STUDIES	2-41
2.2-3	COMPARISON OF MAJOR SYSTEM COMPONENT SIZES FOR VARIOUS TURBINE SIZES AND A CONVENTIONAL ELECTRIC-MOTOR-DRIVEN CHILLER PLUS A GAS-FIRED BOILER.	2-46
2.2-4	DISTRIBUTION OF ANNUAL ENERGY COSTS	2-50
2.2-5	ANNUAL ENERGY COST FOR AN ALL ELECTRIC AND AN ELECTRIC/GAS CONVENTIONAL HVAC SYSTEM WITH AND WITHOUT HEAT PUMPING.	2-53
2.3-1	RESULTS OF OPTIMIZING SYSTEM.	2-71
2.3-2	ANNUAL OPERATING COST COMPARISON OF PRIME MOVER COUPLING CONCEPTS	2-78
2.3-3	ALTERNATE DRIVERS FOR SYSTEM MODEL.	2-79
2.3-4	ECONOMY MOTEL APPLICATION, ENERGY COST AND CONSUMPTION	2-85
2.3-5	COMPARISON OF 90 HP BASE-LOADED STEAM RANKINE AND ADVANCED STIRLING ENGINES IN HEATING MODE - SAMPLE CASE	2-87
2.3-6	ECONOMY MOTEL APPLICATION, STEAM RANKINE SYSTEM OPTIMIZATION.	2-100
3.2-1	CENTRIFUGAL COMPRESSOR SIZING INFORMATION FOR THE 125 TON LSM CHILLER SHOWING THE SIGNIFICANT MECHANICAL AND PROCESS PARAMETERS.	3-5
3.2-2	COMPRESSOR IMPELLER FLOW PATH GEOMETRY.	3-18
3.2-3	COMPRESSOR DESIGN PARAMETERS.	3-19
3.5-1	PROCESS AND GEOMETRIC PARAMETERS EVALUATED IN TURBINE OPTIMIZATION STUDY.	3-28

LIST OF TABLES (Cont'd)

Number		Page
3.5-2	RESULTS OF PARAMETRIC STUDY SHOWING KEY TURBINE PERFORMANCE AND SIZING FACTORS FOR STEAM CONDITIONS OF 950°F (INITIAL AND REHEAT)/600 AND 800 PSIG/2.4 PSIA AND AT SPEEDS OF 40,000 AND 58,000 RPM.	3-29
3.5-3	RESULTS OF PARAMETRIC STUDY SHOWING KEY TURBINE PERFORMANCE AND SIZING FACTORS FOR 40,000 RPM, 800 PSIG/2.4 PSIA AND AT TEMPERATURES OF 950, 1050 AND 1150°F AND WITH 5, 6, 7 AND 8 INCH DIAMETER WHEELS	3-30
3.5-4	RESULTS OF PARAMETRIC STUDY SHOWING KEY TURBINE PERFORMANCE AND SIZING FACTORS FOR STEAM CONDITIONS OF 950°F (INITIAL AND REHEAT)/ PRESSURES OF 200 AND 400 PSIG/2.4 PSIA AND AT SPEEDS OF 40,000 AND 58,000 RPM.	3-31
3.5-5	RESULTS OF PARAMETRIC STUDY SHOWING KEY TURBINE PERFORMANCE, SIZING FACTORS AND STEAM FLOW RATES FOR SIX- AND SEVEN-INCH DIAMETER WHEELS, WITH 950, 1050 AND 1150°F/800 PSIG STEAM AND WITH VARIOUS BACK PRESSURES	3-32
3.5-6	FINAL SELECTION OF STEAM STATE POINTS AND TURBINE DESIGN PARAMETERS	3-36
3.5-7	TURBINE STAGE DATA.	3-38
3.6-1	EFFECTS OF STEAM OUTLET CONDITIONS ON STEAM GENERATOR COIL COSTS.	3-55
3.6-2	INITIAL STEAM GENERATOR PARAMETRIC STUDY - SUMMARY OF RESULTS.	3-57
3.7-1	REGENERATOR PROCESS DESIGN SPECIFICATION.	3-69
3.9-1	NOMINAL FEED WATER QUALITY STANDARDS.	3-73
3.9-2	FEED WATER QUALITY REQUIREMENTS FOR LSM SYSTEM.	3-73

1.0 ANALYSIS OF SYSTEM SIZE VERSUS SYSTEM COST, LARGE SIZE MODEL

1.1 Introduction

The 7-1/2-ton HSPF product* cost estimates indicated that the 7-1/2-ton system would have an equipment first-cost premium of several hundred percent relative to competitive conventional package equipment. The 7-1/2-ton Market Potential Study (Appendix Volume II), indicated a vanishingly small market with such a high first-cost premium. As a result, the 7-1/2-ton program was terminated. The equipment cost study also showed, however, that first-cost premium tended to reduce as unit size increased. It appeared that the premium might become manageable at 75 to 125 tons. A study was initiated to determine the qualitative relation between system size and cost.

The basic objectives of the analysis of system cost as a function of unit size were: 1) to determine the approximate variation of the cost per ton of the HSPF unitary configuration as the product was scaled from 7-1/2 tons to 125 tons and, 2) to determine in which unit size range the first cost premiums would be acceptable for a product. The 125 ton limitation was selected as being the maximum standard unitary offered in the industry today. A significant variation of cost per ton was expected since rather large fixed costs were associated with the steam-Rankine driver. This qualitative cost study sought to use the 7-1/2 ton HSPF system costs and scale those costs to the larger sizes. Figure 1.1-1 illustrates the results expected from this study.

The ultimate objective of the analysis of system cost as a function of unit size was to identify a new size range at which a HSPF could be successfully marketed. This new size range was associated with a prototypical product designated the Large Size Model (LSM). As the result of this system cost analysis and the LSM market potential study, the LSM product size range selected was from 60 tons to 400 tons. The nominal nameplate cooling capacity of the prototypical product was designated at 120 tons.

---

*Object of the 7-1/2-ton program.

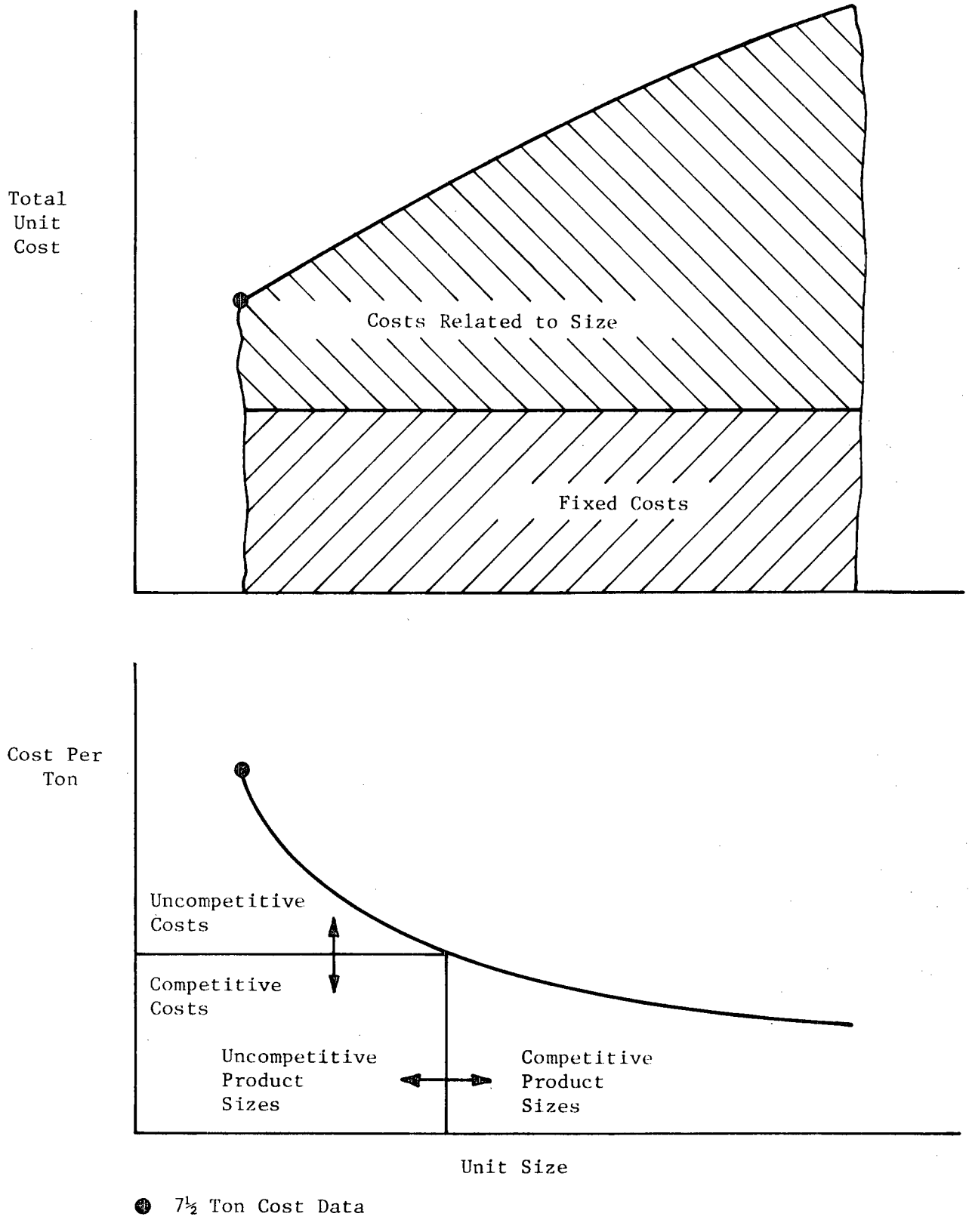

Fig. 1.1-1 Illustration of Unit Size Impact Upon Cost Per Ton

792891

This report addresses the technical design effort relating to the LSM system concept. This section addresses the unit cost basis for the selection of the nominal size for the design. Subsequent sections discuss the system design as it evolved through a number of iterations and the component design of the optimized LSM configuration.

1.2 Application of Scaling Techniques

The use of scaling in developing product or process costs is well established in industry. The use of size scaling is very well developed in the construction and process industries. The usual form of scaling for equipment such as incorproated in the 7-1/2-ton unit is:

$$\text{Cost at desired size} = \text{Cost at base size} \times \left[\frac{\text{Desired Size}}{\text{Base Size}}\right]^n$$

The scaling exponent, n, ranges in value from 0.4 to 1.0 depending upon the type of equipment that is involved. Typical values for the scaling exponents for various types of equipment is given in Table 1.2-1. The form of the relation used in the qualitative cost study is:

$$\text{Cost at desired size} = \text{Fixed costs} + \text{Variable cost at base size} \times \left[\frac{\text{Desired Size}}{\text{Base Size}}\right]^n$$

It was expected that with the information available this latter form would be more accurate.

In applying scaling techniques to define product or process costs, a number of assumptions are made. The assumptions that are usually implicit are:

- The product or process being scaled is not changed as the scale is changed;
- The methods of manufacture or assembly are not changed with scale;
- The production level is constant.

The assumptions that are usually explicit are the split between fixed and variable cost (as a function of scale) and the functional variation of costs with scale. The qualitative analysis pursued incorporated these assumptions.

TABLE 1.2-1

SCALING EXPONENTS FOR VARIOUS TYPES OF EQUIPMENT

Equipment/Process	Scaling Exponent
Motors	1.00
Steam Turbines	0.48
Controls for Turbines	0.38
Boilers	0.50
Compressors	0.59
Heat Exchangers	0.70

Source - Guthrie, K.M. "Process Plant Estimating, Evaluation, and Control" (Reference 6).

The basic assumption with respect to the product was that it was a unitary, air-to-air heat pump driven by a steam-Rankine prime mover and incorporating self-powered auxiliaries. The cost estimates were performed at the component level. Eight major components were identified, as shown in Table 1.2-2 and examined for design compatibility, the manufacturing processes to be used, and scaling capability over the proposed range of product size. The production level was assumed to be constant with respect to product size. Except for the turbomachinery package, all components were presumed to be geometrically similar over the entire size range.

1.3 Qualitative Cost Analysis for Components

The split between fixed and variable costs and the variable cost scale factor are presented in Table 1.2-2. The rationale for the segmentation is presented as follows.

The steam generator had a large number of control components and instrumentation which would be constant regardless of size. This portion that was estimated as fixed was 30% of the base cost. The variable component was essentially a heat transfer surface. Therefore, the heat transfer scaling factor of 0.7 was used. The basic design and construction features were considered constant over the entire size range.

The bulk of the heat exchanger component was heat exchanger surface. The heat exchanger component would include the indoor and outdoor refrigerant coils, indoor and outdoor steam condenser coils, mountings and associated hardware. The fixed costs were estimated at 20% of the base cost. The heat transfer scaling factor of 0.7 was used. The basic design was considered constant over the entire size range.

The turbomachinery unit was considered to essentially be fixed in cost over the 7-1/2-ton to 30-ton range. Due to the particular design of the turbine, only about 25% of its total arc was being utilized at 7-1/2 tons. Also, a refrigerant change from R-11 to R-12 would require few changes to the compressor. Therefore, with very little modification, the turbomachinery package would satisfy any unit in the 7-1/2-ton to 30-ton range. Over this

TABLE 1.2-2

MAJOR COMPONENTS AND COSTING

USED IN QUALITATIVE COST STUDY

Component	Fixed Cost	Variable Cost	Scaling Factor
Steam Evaporator			
7½ - 30 tons	30%	70%	0.7
Heat Exchangers			
7½ - 30 tons	20%	80%	0.7
Turbomachinery			
7½ - 30 tons	75%	25%	0.5
Over 30 tons	25% (1)	75% (1)	0.5 (1)
Fans and Motors	20%	80%	1.0
Controls			
7½ - 30 tons	100%	0	-
Over 30 tons	60%	40%	0.4
Valves and Piping			
7½ - 30 tons	100%	0	-
Over 30 tons	20% (1)	80% (1)	0.7 (1)
Frame and Enclosure			
7½ - 30 tons	85%	15%	0.7
Over 30 tons	60% (1)	40% (1)	0.7 (1)
System Assembly and Test			
7½ - 30 tons			-
Over 30 tons	80% (1)	20% (1)	1.0 (1)

(1) 30 ton size is base size

range, the turbomachinery package was considered to be 75% fixed and 25% variable with size. The variable portion was assumed to scale with the 0.5 power of the ratio of the size. The 0.5 scaling factor is characteristic of turbines and centrifugal compressors. Over 30 tons, a more general scaling was used since no unit had been designed for this range. The fixed cost was assumed to be 25% of the 30-ton unit which was taken as the base unit. The variable cost for over 30 tons was assumed to be 75%. The scaling factor remained 0.5.

The fans and motors essentially scaled with size. Twenty percent of the costs were considered fixed. The variable cost was assumed to scale with the motor scaling factor of 1.0.

To a large extent, the controls were fixed. In the 7-1/2-ton to 30-ton range, the controls were in fact assumed to be fixed; over 30 tons, 60% were assumed to be fixed. The variable scale factor was taken to be 0.4 which is typical of controls. The base unit for over 30 tons is the 30-ton unit.

Due to the refrigerant change, no change in valving and piping costs would have occurred from the 7-1/2-ton to 30-ton unit size. Over 30 tons, the costs would have varied with size with a 0.7 scaling factor. The fixed cost of piping was taken as 20% with the 30 ton unit as the base unit.

The framing and enclosure were to a large extent fixed. The scale variation was taken as 0.7. The smaller sized units would have only 15% of the costs as variable due to refrigerant change. The variable cost would have been 40% for the over-30-ton units.

System assembly would remain virtually fixed over the 7-1/2-ton to 30-ton range. Over 30 tons, assembly operations would take slightly longer due to the larger physical size of the components and the unit. In the over-30-ton range, 20% of the costs were considered to be variable with a scale factor of unity.

1.4 Impact of Cost Variations on Market Acceptance

The previous assumptions were applied to analyzing the cost of a family of unitary, air-to-air gas heat pumps varying in size. The results for four unit sizes are shown in Table 1.4-1. The starting point of the scaled costs was the optimistic 7-1/2-ton cost estimate. Figure 1.4-1 shows the cost variation (computed by the methodology discussed previously) as compared to a simple scaling of the 7-1/2-ton unit. The objective was to identify if any portion of the size range would achieve a manufacturing cost per ton less than $350. This cost level was known to result in a contractor's cost premium of about 50%. The LSM Market Study had indicated that a 50% cost premium was the largest premium that would not impose a substantial market barrier. Table 1.4-1 and Figure 1.4-1 show that units sized over 60 tons were projected as being able to achieve the market cost objectives. The 125-ton unit size is indicated as exhibiting a zero cost premium. If a simple 0.5 scaling factor had been used instead of the more complex analysis, the 125-ton size still would have achieved the 50% cost premium objective. Since product cost appeared to be favorable at 125 tons, market acceptance was expected at this size. The 120-ton size was recommended as the base size for any future demonstration of the LSM.

The unresolved question was if the increased market acceptance would offset the decreased market availability to make the large size model an attractive product. This question was posed as a market evaluation task that was subsequently conducted by W. E. Hill and is presented in Appendix Volume VII of this report.

This market evaluation revealed that in the larger 125-ton size only a small segment of the market is served by unitary systems. Built-up systems represent a much larger segment of the market. Thus, the configuration was changed to a built-up system to maximize the market potential for the 120-ton large size model (LSM).

TABLE 1.4-1

COMPARATIVE COSTS FOR DIFFERENT UNIT SIZES

Refrigerant	R-11	R-12		
Unit Size	7½	30	60	125
Steam Evaporator	1000	2147	3085	4434
Heat Exchangers	1000	2311	3465	5197
Turbomachinery	1448	1810	2372	3109
Fans and Motors	750	2550	4590	8262
Controls	1000	1000	1128	1272
Valves and Piping	1500	1500	2249	3373
Frame and Enclosure	1000	1250	1562	1952
System Assembly and Testing	1280	1280	1536	1843
Total Manufactured Cost	8978	13848	19987	29442
Cost/Ton	1197	462	333	245

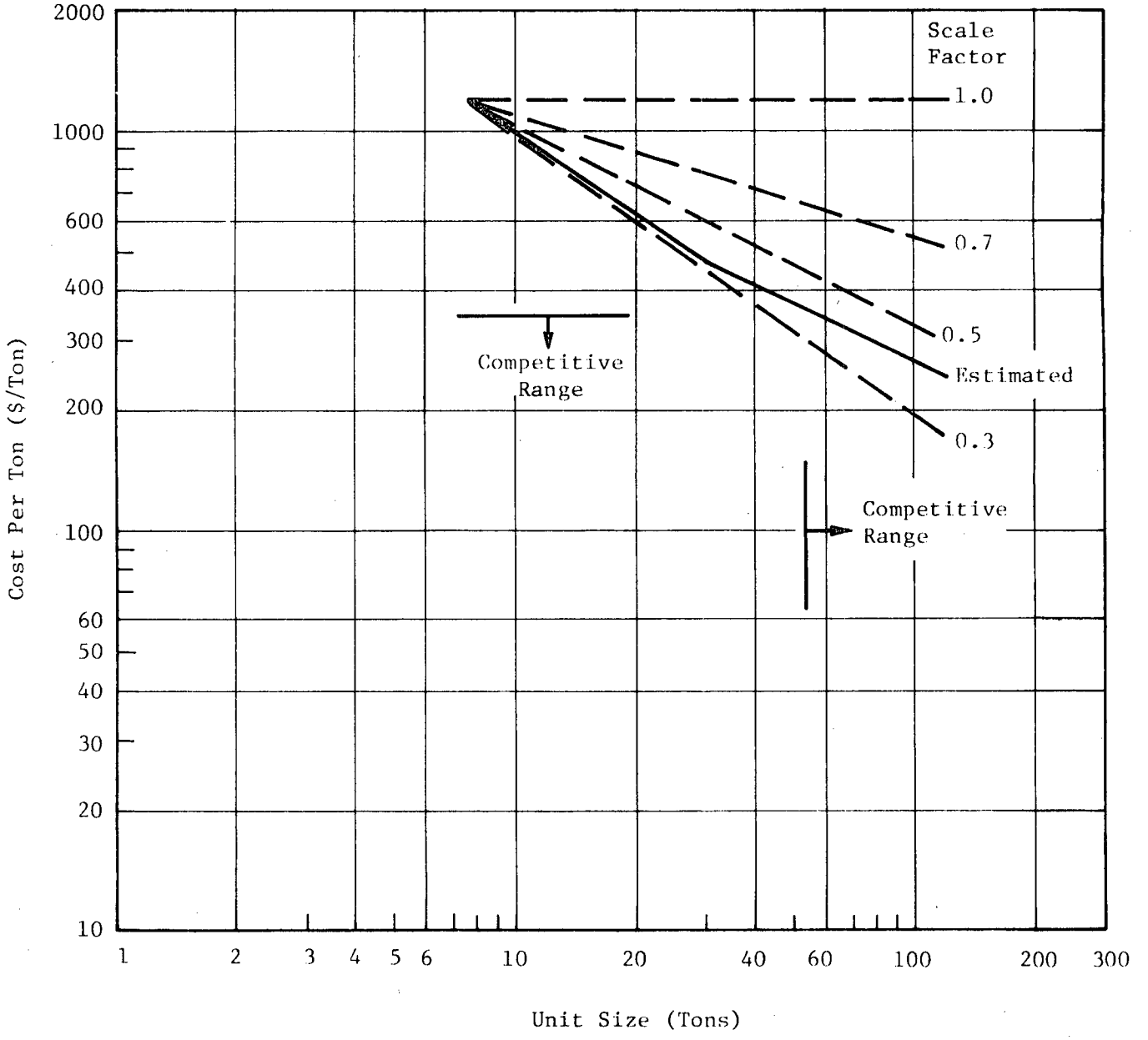

Fig. 1.4-1 The Variations of Unit Cost of the Unitary Air-to-Air HSPF Heat Pump versus Unit Size

2.0 SYSTEM DESIGN ANALYSIS

The system design analysis was conducted in three phases which occured in a chronological sequence. The initial phase utilized a simple steam driven internal-source heat pump system without an economizer mode and power generation capability. The second phase incorporated the recommendations from the initial study, enhancing the system's energy cost competitiveness and established the basic sizing of the major system component. The third phase of the system design analysis effort was conducted in parallel with the component design task. The third phase focused on expanding the model's capability to more accurately predict off-design performance, and focused on achieving an optimized system design. Subsequently, the model was used to evaluate alternative methods of transmitting the turbine power to the compressor wheel, and was expanded to include the performance of alternate drivers.

2.1 Initial Analysis

This analysis was generated under Task VI-2 of this contract. The intent of the effort was to evaluate the range of operating and design parameters as a function of heating and cooling loads to allow optimization in selecting system hardware. The approach generated an approximate computer representation of the postulated system in sufficient detail to provide outputs of the heating/cooling performance, interaction between heating/cooling modes and approximate operating characteristics of the expander and compressor. The model was configured into a computer program which could be interfaced directly with the computer program used by CNG in their assessment of typical building loads and the cost-of- ownership analysis.

2.1.1 System Description

The large size model (LSM) gas-fired heat pump system consisted of two subsystems (1) a steam-powered system and, (2) a refrigerant system. These systems interfaced with each other in two ways. First, the power input of the refrigeration system was developed by the steam power cycle. Therefore, the energy input to the steam system was somewhat proportional to the cooling load that existed on the refrigeration system. Second, the condenser cooling water in both the heating and the cooling modes passed in series flow through the refrigerant condenser and then the steam condenser. Figure 2.1-1 represents a

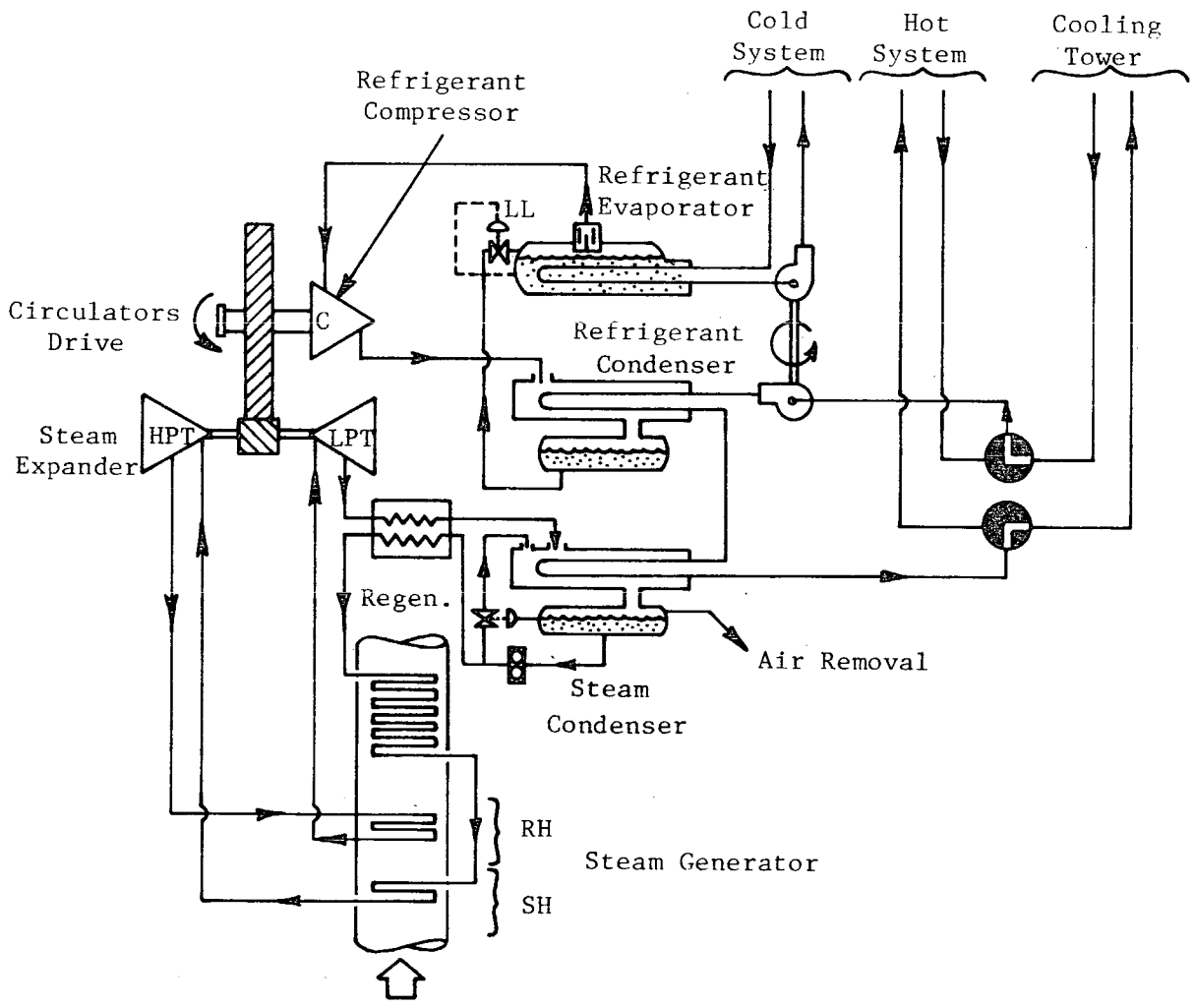

Fig. 2.1-1 Simplified Overall System Schematic

792270

MECHANICAL TECHNOLOGY INCORPORATED

simplified schematic of the overall system. Functionally, the steam power system (steam generator, condenser, expander, regenerator, plus ancillaries not shown) replaced an equivalent size electric motor drive (for the chiller/heat pump). This steam power system also reduced the steam generator capacity requirement in a conventional HVAC system.

The system capitalized on heat sources located within a typical office building. These heat sources were composed of internal heat generated by inhabitants, machinery, computers, and other heat producing sources. The building comprised two basic zones of heating/cooling; the exterior skin zone required heating and cooling as the local weather situation changed. In contrast, the interior zone always required cooling since that zone had no external walls and, in general, would generate heat as described above. As shown in Figure 2.1-1, three thermal systems were required. The cold system interfaced with both the internal and perimeter zones of the building, comprising a common double-bundle chiller unit. The hot system interfaced primarily with the external zone of the building.

Assuming that cooling but no heating was required, the valving arrangement as shown in Figure 2.1-1 would allow heat absorbed by the refrigerant evaporator to be rejected to a cooling tower. In actual practice, the heating water and cooling tower water systems were independent, requiring separate condenser bundles and circulating pumps. As the building heating load increased, the cooling tower was shut down and the building's heating load absorbed the heat rejected from the refrigerant and steam systems. The shaft power required for the compressor in the chiller loop was provided by a steam turbine drive; steam from the turbine was generated locally in a packaged vapor generator. The heat generated from the steam Rankine cycle was added to the heat rejected from the refrigerant condenser. If necessary, supplemental steam could have been used to satisfy the total heating load of the building.

Figure 2.1-2 shows a schedule of various temperatures within the system as a function of the outside ambient temperature. The hot water delivery temperature was programmed over a range of 180°F to 115°F as the outside ambient temperature ranged between 0 and 50°F. The chilled water delivery temperature varied roughly ± 5°F around the American Refrigeration Institute (ARI) standard

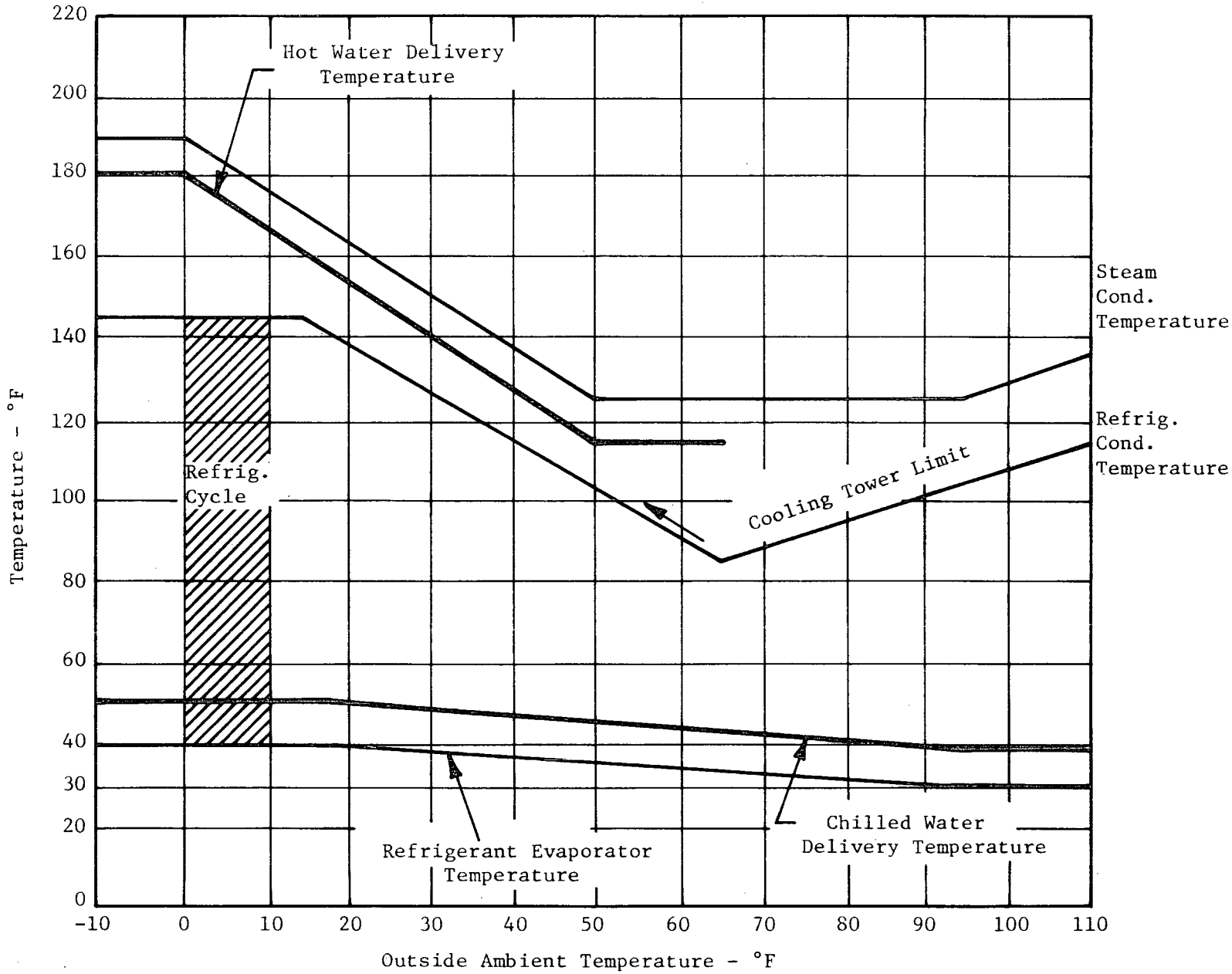

Fig. 2.1-2 Temperature Control Schedule

792255

MECHANICAL TECHNOLOGY INCORPORATED

44°F delivery water temperature. The highest water temperature in the system was the steam condensing temperature; the lowest temperature was the refrigerant evaporator temperature. The refrigerant cycle was thus constrained to operate between the temperature limits indicated by the cross-hatched area on the diagram. Above 55°F outside ambient temperature, the heat rejection was constrained by the capacity of the cooling tower. The cooling tower return water temperature was a function of the local ambient temperature and humidity.

Programming the hot water delivery temperature from outdoor ambient temperature is a conventional method used in large commercial buildings. The objective of this controlled strategy is to make the exterior walls essentially neutral in respect to heat transfer. Small differential heating and cooling loads are then satisfied by a variable air volume system controlled by local thermostats.

2.1.1.1 Steam Power Subsystem. The steam Rankine-power system was modeled on the basis of 1000 psig/1050°F/1050°F steam conditions. Figure 2.1-3 projects the relationship of the steam cycle thermal efficiency and ambient temperature for a fully loaded expander. This relationship was a reflection of the steam condenser temperature versus ambient temperature relationship shown in Figure 2.1-2. As the steam condensing temperature increased with lower ambient temperatures, the steam cycle thermal efficiency decreased. Figure 2.1-4 presents the performance of the power cycle as it changed with expander (turbine) loading. The loss in thermal efficiency changes shown here was considered to be the result of changing performance in the partial arc of the expander. Figures 2.1-3 and 2.1-4 define the thermodynamic performance of the steam-powered cycle at any ambient (condensing temperature) temperature and turbine loading condition.

Figure 2.1-5 represents a sample T-S diagram of the steam-power cycle plan for this system which utilizes both reheat and regeneration. The base-cycle thermal efficiency of 31% was available for the state points shown (excluding feedwater and lube-oil pumps, bearing and other friction losses). At this stage of the LSM system development, the steam state points were not firmly established. The optimization of the cycle, vis-a-vis the expander performance

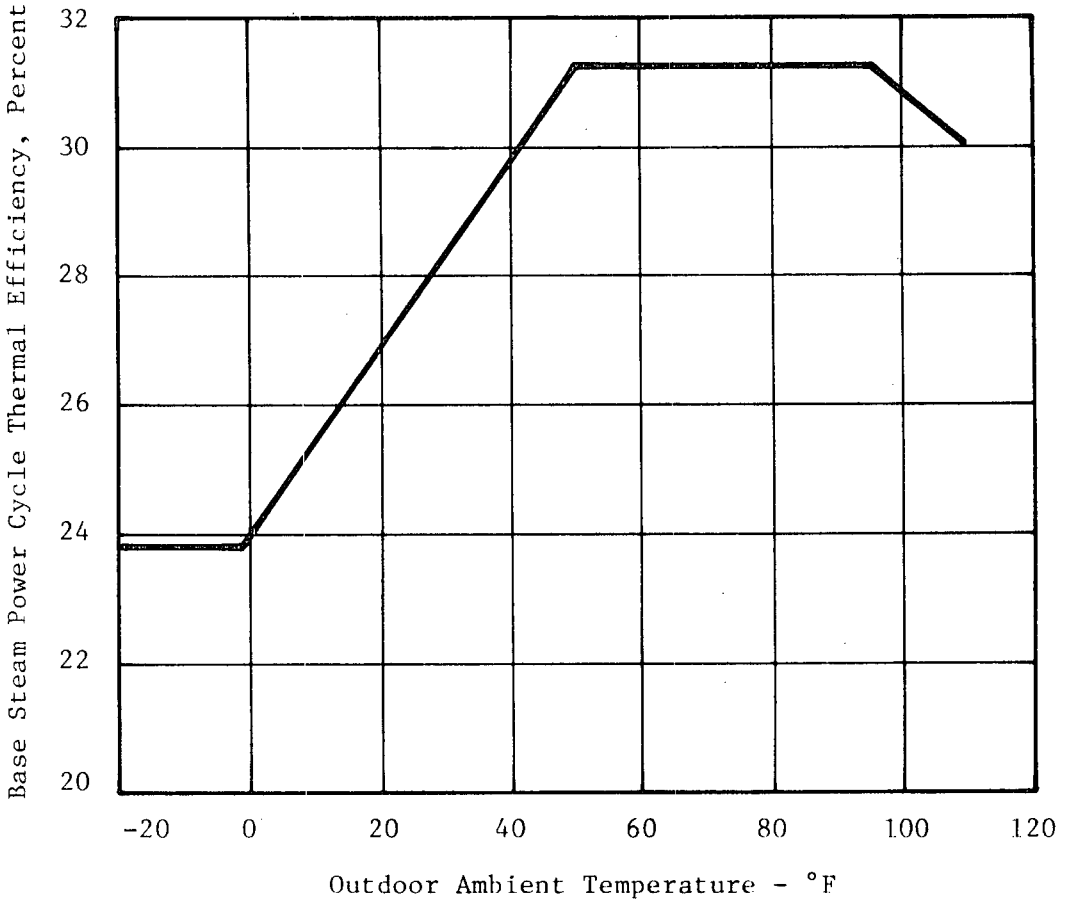

Fig. 2.1-3 Variation of Steam Cycle Thermal Efficiency with Outdoor Ambient Temperature Based on the Hot Water Delivery Temperatures of Figure 2.1-2

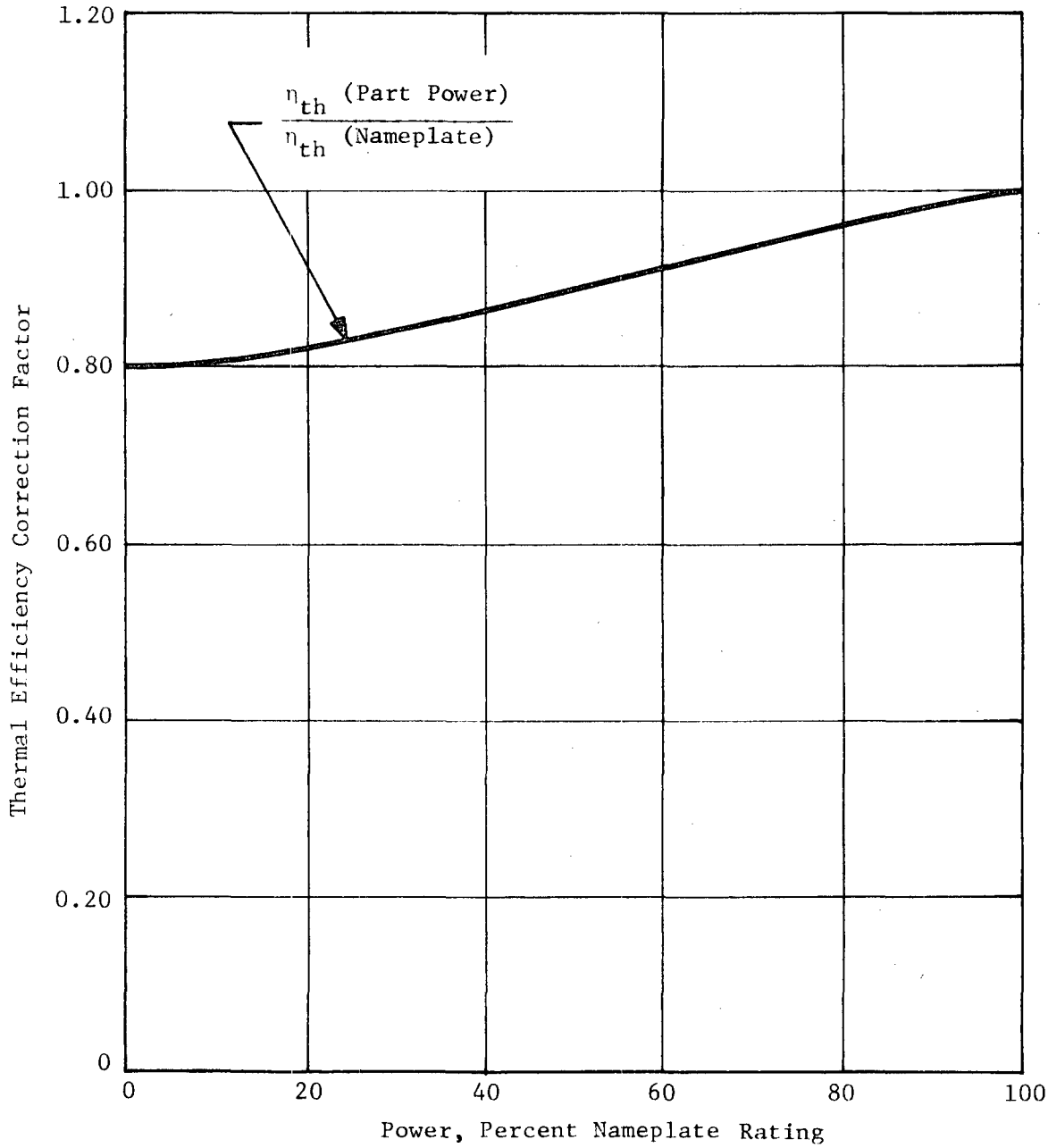

Fig. 2.1-4 Part-Load Performance of Steam System

792256

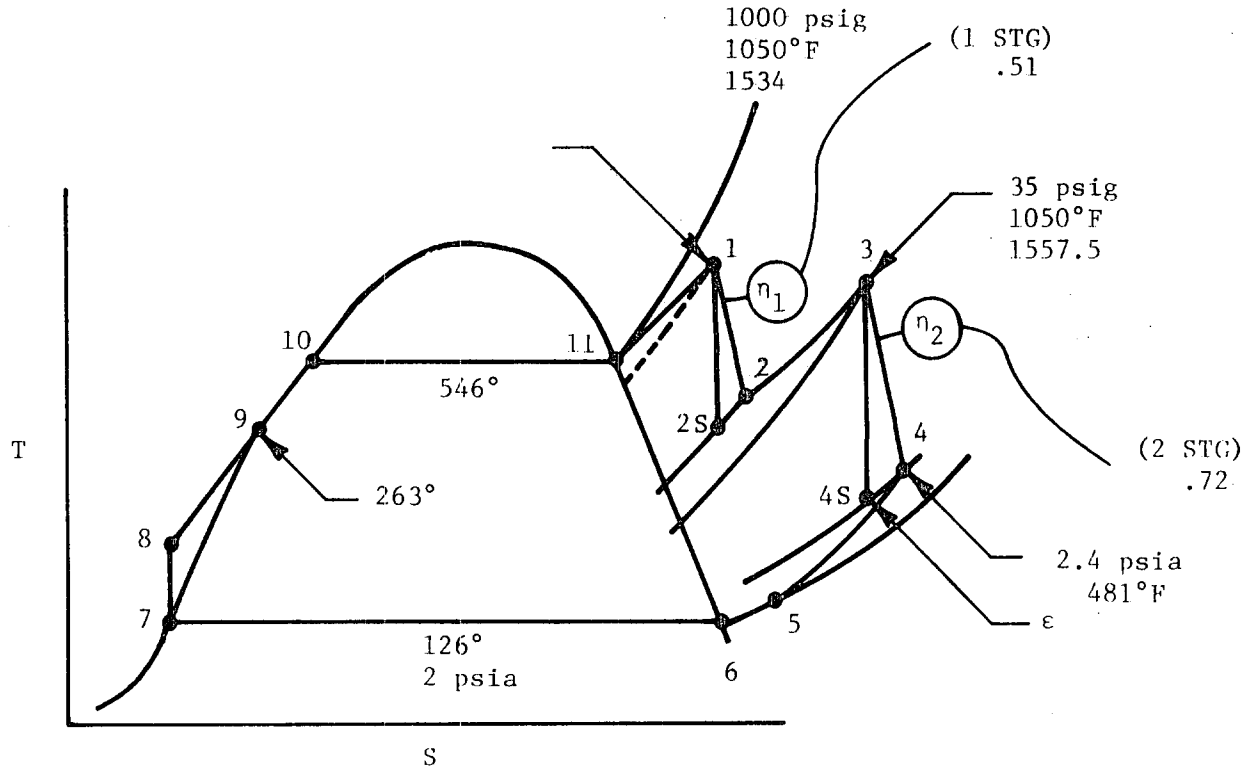

η_{TH} = 31%

Fig. 2.1-5 Example Power Cycle State Points

792487

MECHANICAL TECHNOLOGY INCORPORATED

and parasitic losses, was planned to be completed following additional system parametric studies.

Preliminary efficiency projections were based upon specific speeds in the range of 3 to 9 for the first stage expansion and 15 to 35 for the second stage (after reheat). Figure 2.1-6 estimates the expander performance as a function of pressure ratio. The estimate was used to calculate the overall thermal efficiency as presented in Figure 2.1-3. This efficiency was based upon a fully loaded turbine and had to be corrected for the part-load effects as shown in Figure 2.1-4.

2.1.1.2 Refrigerant (Chiller) Subsystem. The subsystem performance analysis was based on the assumption that the compression machinery utilized would be of the positive displacement type. In terms of overall performance and required operating characteristics, the program results were not expected to differ substantially if centrifugal machinery was finally selected. The compressor efficiency model which was used in the performance analysis is presented in Figure 2.1-7. At the design point volume ratio utilizing R-12 refrigerant, the isentropic efficiency was 74%. This percentage was an efficiency level achievable with well designed, oil-flooded screw compressors.

Figure 2.1-8 shows that, over the range of outdoor ambient temperatures contemplated for this system, the volume ratio varied between two and four. The established design volume ratio was 2.75. The system had been configured to achieve design point performance at outdoor ambient temperatures of 45°F and 88°F. The cooling coefficient of performance (COP), consistent with the compressor performance indicated, is presented on Figure 2.1-8.

Part-load performance of the chiller system was also included in the system model. Figure 2.1-9 illustrates the manner in which the COP of the system was affected by the part-load performance characteristics of the compressor. The chiller heat pump performance over the range of ambient temperatures and chiller loading is defined in Figures 2.1-8 and 2.1-9 collectively.

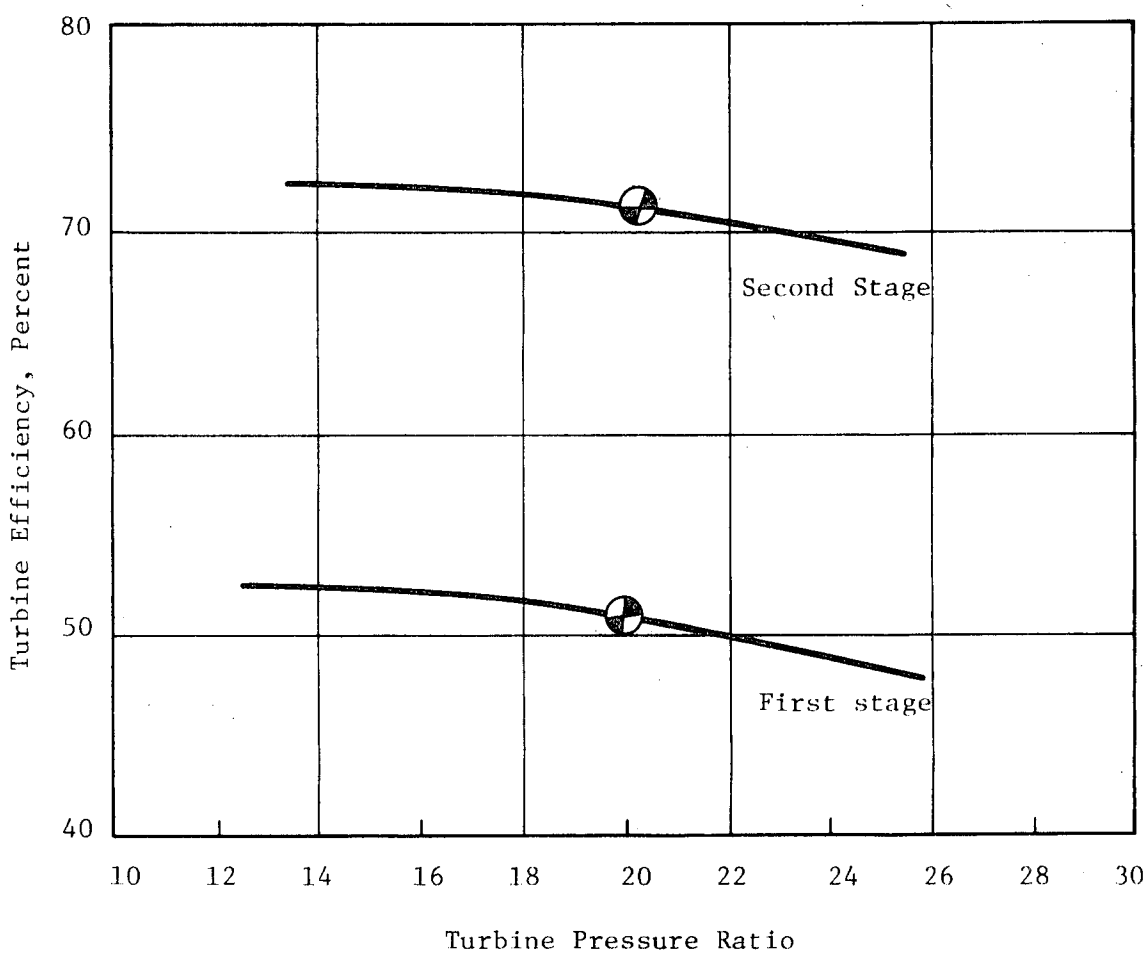

Fig. 2.1-6 Assumed Variation of Turbine Performance with Pressure Ratio

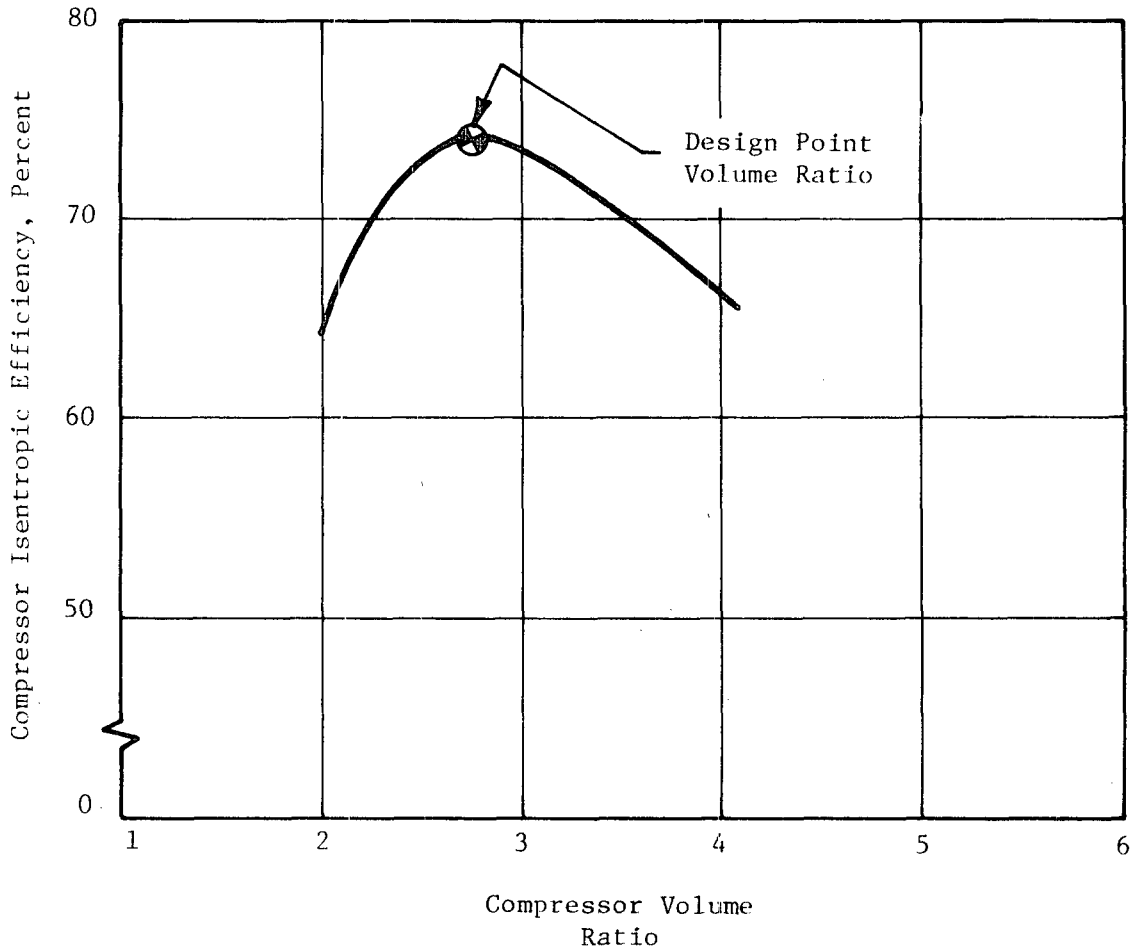

Fig. 2.1-7 Compressor Efficiency versus Volume Ratio

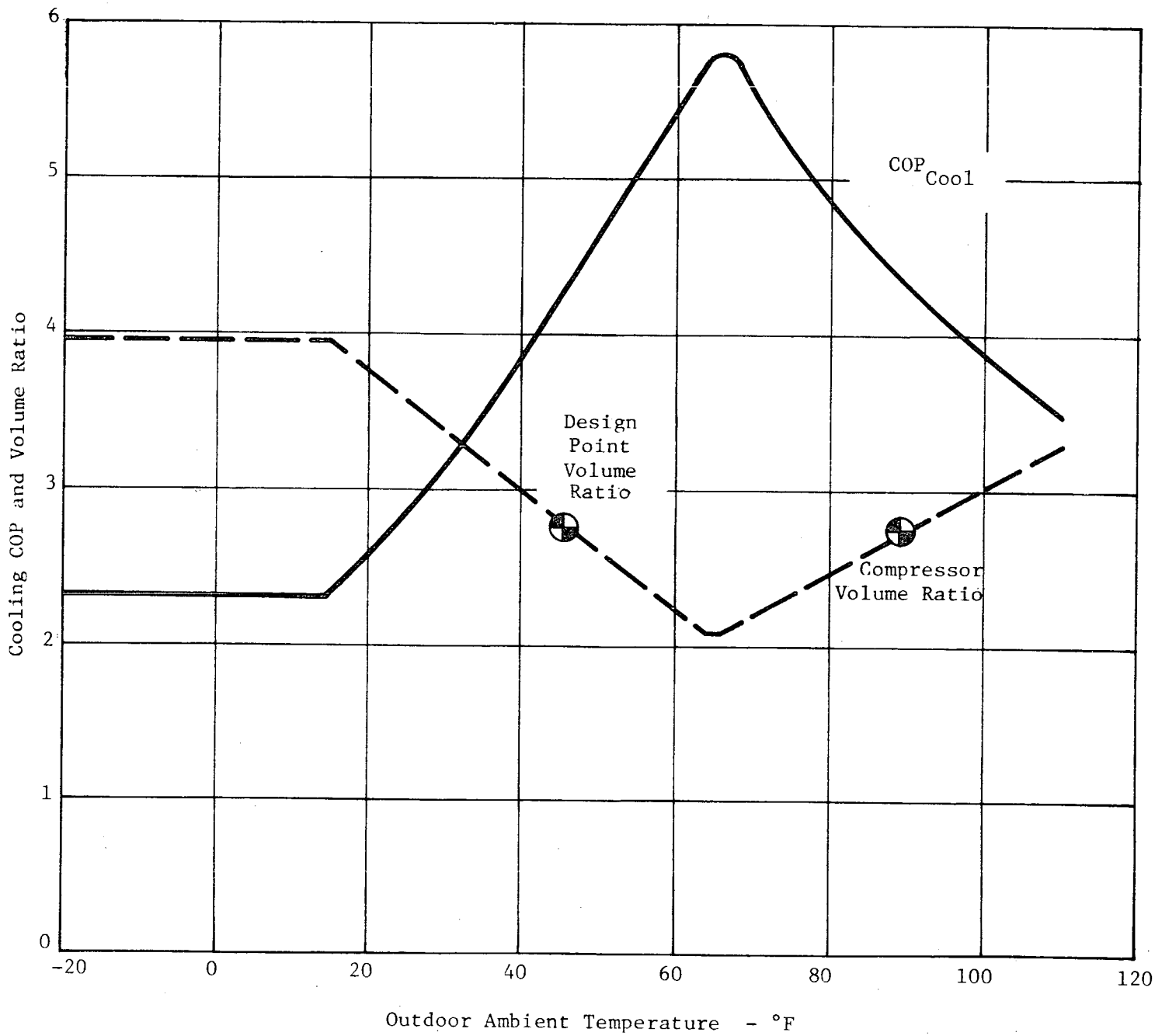

792257

Fig. 2.1-8 Compressor Volume Ratio and Refrigerant System COP

MECHANICAL TECHNOLOGY INCORPORATED

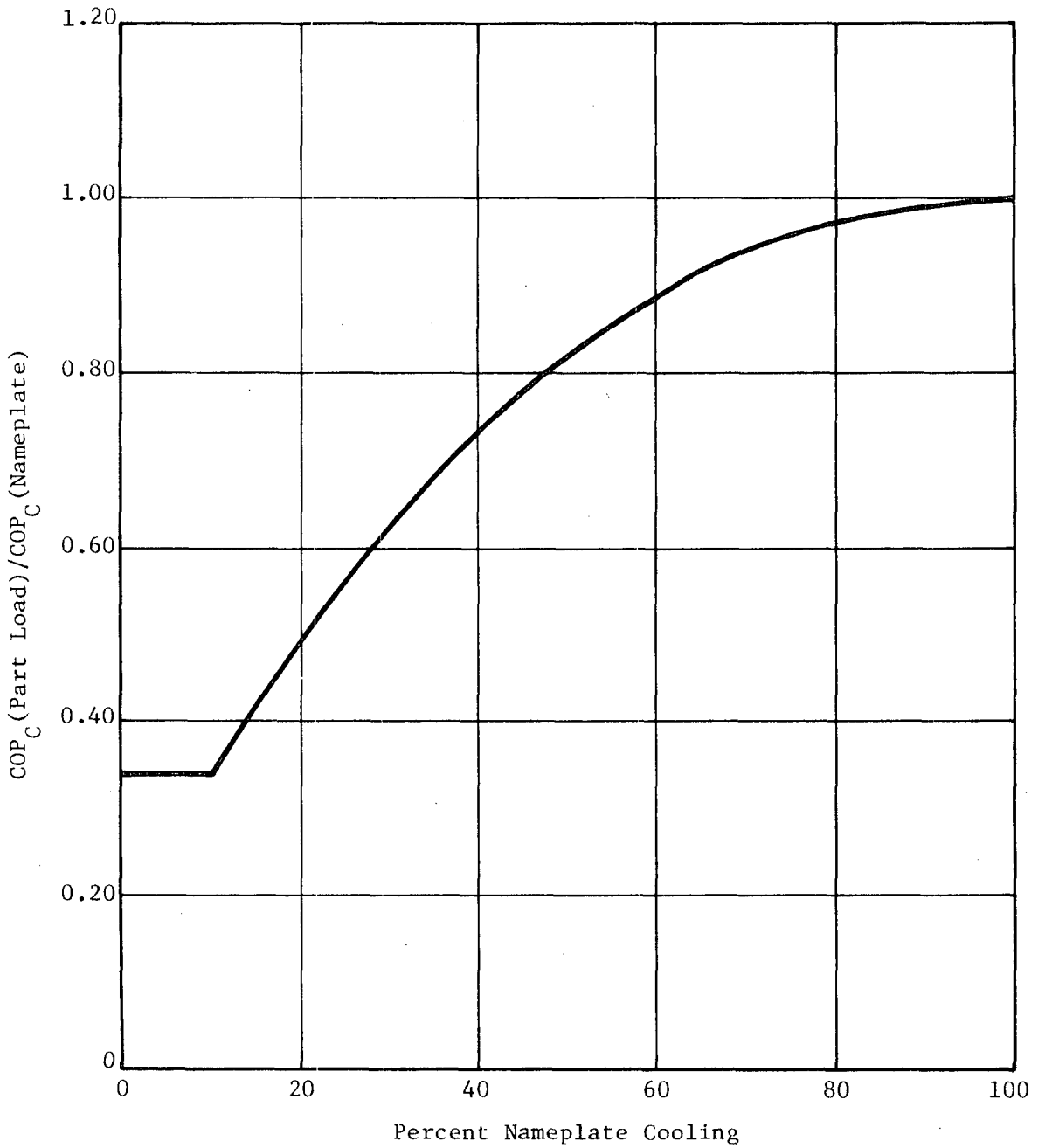

Fig. 2.1-9 Part-Load Performance Refrigerant System

2.1.2 System Performance Analysis

2.1.2.1 Methodology. The distribution of heating/cooling loads was critical to the performance of this system. The block diagram, Figure 2.1-10, illustrates the approach taken to establish this performance along with the machinery designed parameters. There were only two basic inputs to the overall program. The first input comprised weather data. The second input comprised the type of building, amount of ventilation, and process and internal heat loads, all consistent with ASHRAE construction code 90-75. The analysis was carried out utilizing an energy requirements program. A card deck was generated which interfaced with the heating and cooling requirements of the building to predict the estimated performance of the LSM prototype. The program output compiled specific factors for the LSM on an hourly basis. These factors included: coefficient of performance, turbine power, compressor operating parameters, heat exchanger requirements, etc.

The prototype equipment performance subroutine is shown in block diagram in Figure 2.1-11. As shown in the figure, only three inputs were required to operate the program: cooling load (Q_1), heating load (Q_7), and local ambient temperature (T_1), all of which emanated from the load program. The algorithms required to estimate performance are the six equations shown in the block. In the case of simultaneous heating and cooling, the total heat rejection rate, Q_5, represents the sum of refrigerant condenser, steam condenser, and mechanical losses absorbed by the oil cooler. This available heat was compared with the heating load required by the building, Q_7. The program enabled the computer to make a decision to either make up heat if the quantity was deficient, or reject heat to the cooling tower if the quantity of available heat exceeded that required by the building. The total output of the program then became Q_{11}, which represents the total gas energy input. In cases where the heating load, Q_7, was greater than the available heat, Q_5, the computer made a decision to add additional heat to the building by direct steam augmentation (firing additional gas).

2.1.2.2 Results of the System Performance Analysis. The LSM was applied to the cooling/heating loads of an office building in three geographical locations: Cleveland, Syracuse and Los Angeles. This building had been selected for preliminary system performance analysis purposes; it was not the building ultimately employed in the LSM Comparative Cost of Ownership Study.

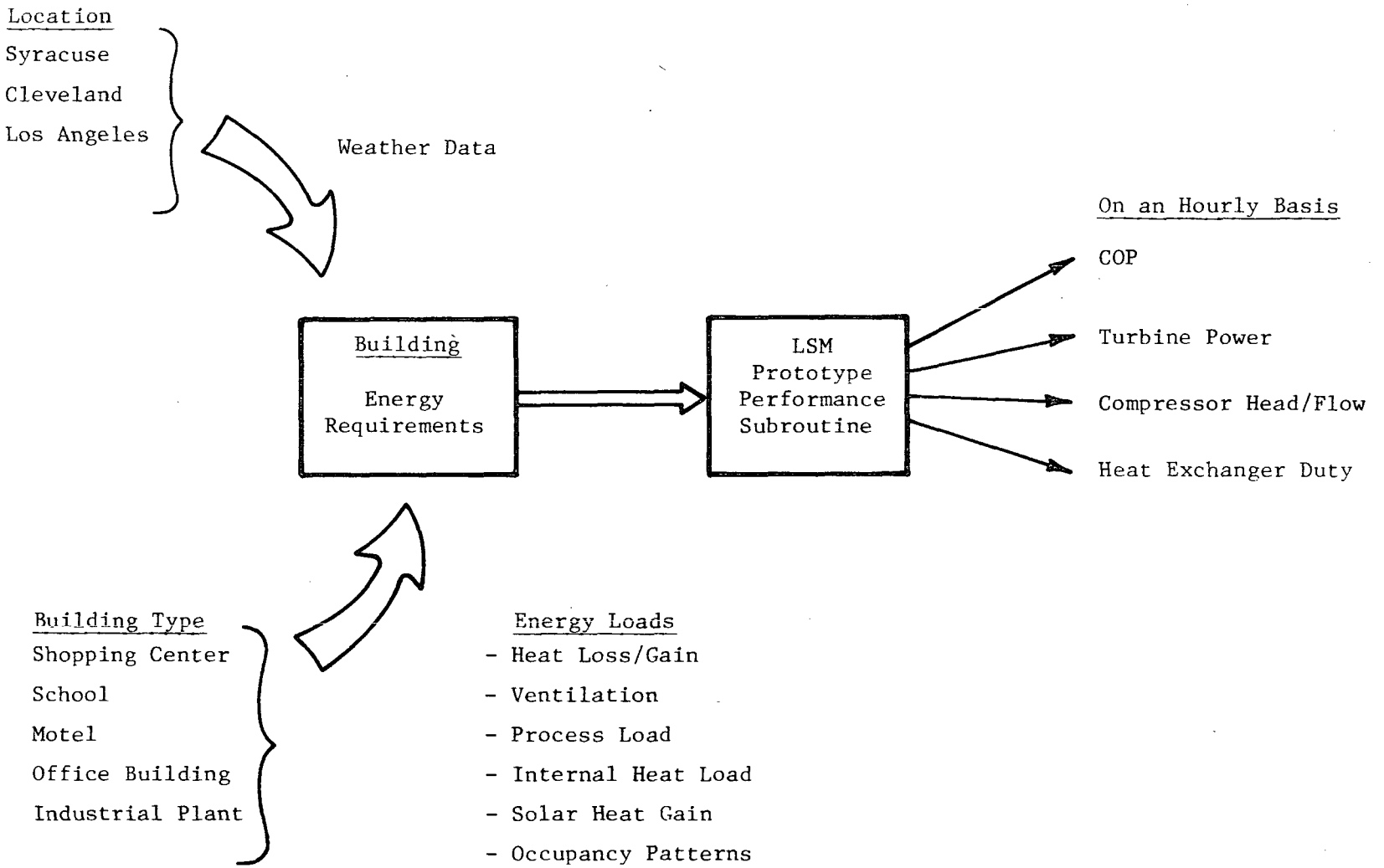

Fig. 2.1-10 System Performance Analysis Approach

792474

MECHANICAL TECHNOLOGY INCORPORATED

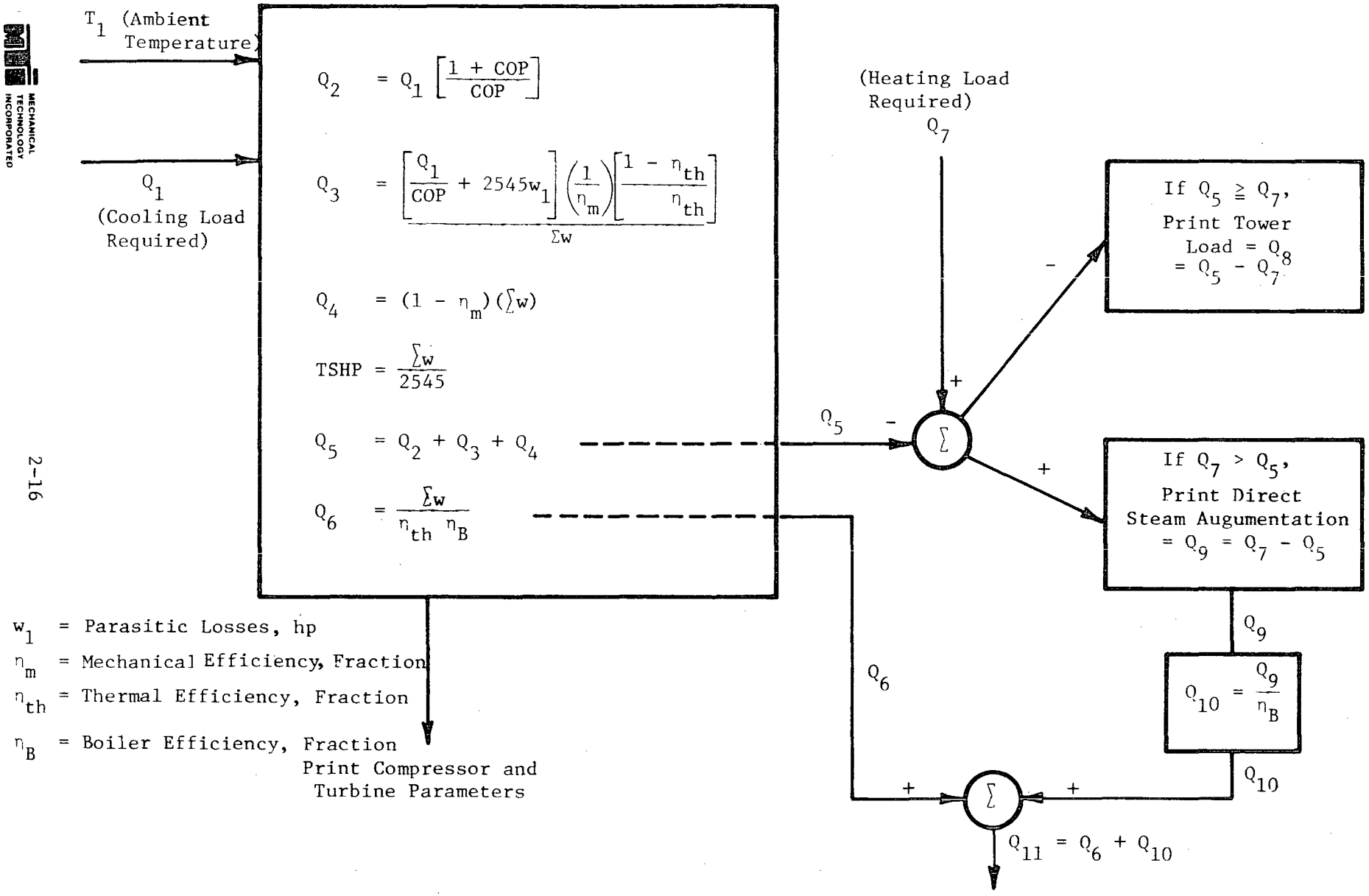

Fig. 2.1-11 Equipment Performance Subroutine

Each building was analyzed with and without an economizer cycle. The peak cooling load was nearly 120 tons and the peak heating load was nearly 1×10^6 Btu/hr. Heating/cooling loads, elapsed time and ambient temperature histograms were developed to analyze loading profiles. A separate histogram of coincident heating and cooling loads was made to help establish the potential impact of internal heat pumping on energy usage required for heating. In general, the results of this analysis indicated that the LSM system, as it was configured, was not well suited for office building applications. The overall heating and cooling COP's were 0.6 and 0.34, respectively, far below target. Table 2.1-1 summarizes the nature of the HVAC loads for the Cleveland office building and breaks the requirements into three temperature ranges:

Range 1 - -8 to 56°F	Heating and cooling with possible economizer cycle
Range 2 - 56 to 72°F	Heating and cooling
Range 3 - 72 to 96°F	Cooling only

An analysis of the nature of the loads and the LSM mode of operation revealed why the performance was deficient:

- On the average, the entire system operated far below the rated output. For example, the average load on the turbine was about 22 percent (43.9 hp) of its 200 hp full-load rating. Fifteen hp was required to drive parasitic mechanical losses.

- The original premise regarding the availability of large cooling loads coincident with heating loads was incorrect. Table 2.1-2 illustrates that very little coincident loading occurred in Cleveland. The same pattern existed in Syracuse and Los Angeles. Without resorting to thermal storage, very little rejected heat from the A/C load could be applied to the heating load for the following reasons:

    a) Heating loads were low

    b) Most of the 175,000 Btu/hr average heating load could have been met by the rejected heat from the steam Rankine system when it was idling (only powering the parasitic loads). Internal heat pumping, in this case, was ineffective.

TABLE 2.1-1

DATA SUMMARY FOR CLEVELAND OFFICE BUILDING
WITHOUT AN ECONOMIZER CYCLE

RANGE	COMMENT	AMBIENT TEMP RANGE, °F	YEARLY HOURS		AVERAGE LOAD 10^6 Btu/hr		PEAK LOAD 10^6 Btu/hr		ANNUALIZED LOAD 10^9 Btu	
			Heating	Cooling	Heating	Cooling	Heating	Cooling	Heating	Cooling
1	Heating & Cooling with possible economizer operation	-8 to 56	5470	1517	0.366	0.205	1.10	0.70	2.009	0.311
2	Heating & Cooling	56 to 72	1276	1402	0.136	0.324	0.30	0.90	0.17	0.454
3	Cooling only	72 to 96	34	1845	0.10	0.544	0.10	1.30	0.003	1.004
	TOTAL	-8 to 96	6780	4764	0.32	0.371	1.10	1.30	2.18	1.769

MECHANICAL TECHNOLOGY INCORPORATED

TABLE 2.1-2

DATA SUMMARY OF COINCIDENT COOLING AND HEATING LOADS FOR CLEVELAND OFFICE BUILDING

Hours Per Year	1,784
Average Loads:	
Cooling	111,000 Btu/hr
Heating	175,000 Btu/hr
Annualized Load:	
Cooling	2.0×10^9 Btu[1]
Heating	0.3×10^9 Btu[2]

[1] 140,000,000 Btu/yr of cooling load occurs when cooling load is less than heating load

[2] 14% of total annualized heating load

- Even in the -8 to 56°F temperature range, where 92% of the annual heating load existed, much of the rejected heat from the chiller was removed from the system at high condensing temperatures (reduced COPs). Then, the heat was rejected to the cooling tower. Figure 2.1-12 illustrates that more heat was dissipated into the cooling tower during the heating season (-8 to 72°F) than in the cooling season (72 to 96°F).

The potential of thermal storage was assessed to ascertain its benefit towards reducing the building's energy requirements in temperature Ranges 1 and 2. The results of this analysis concluded that thermal storage would enhance energy savings, however, it was economically counter-productive. The rationale used to reach this conclusion was as follows:

- In Temperature Range 1 (-8 to 56°F) infinite thermal storage was considered to establish its maximum potential. This temperature range had a large heating demand, requiring 92% (2.01/2.18) of the annual heating load, while only requiring about 17% (0.31/1.76) of the annual cooling load. If the 0.31×10^9 Btu/yr of cooling load was pumped into storage, a total of 1.76×10^9 Btu was rejected from the steam and refrigerant systems.

  The 1.76×10^9 Btu alone represented 81% (1.76/2.18) of the total annual heating requirement. However, this heat was generated during only 22% (1517/6780) of the total heating season. With infinite storage, the maximum energy savings were only 0.38×10^9 Btu/hr over a conventional system (using a boiler of equal efficiency). At current gas prices of \$2 to \$4/10^6 Btu, this energy savings represented only a \$760 to \$1520/yr energy cost savings. These savings would only offset the interest expense of the incremental investment required to pump heat internally (second condenser bundle, \$7500) and store the rejected heat in a single 3000 gallon thermal storage tank (\$6200). A 3000 gallon tank was the tank size conventionally installed in a heat recovery system equivalent

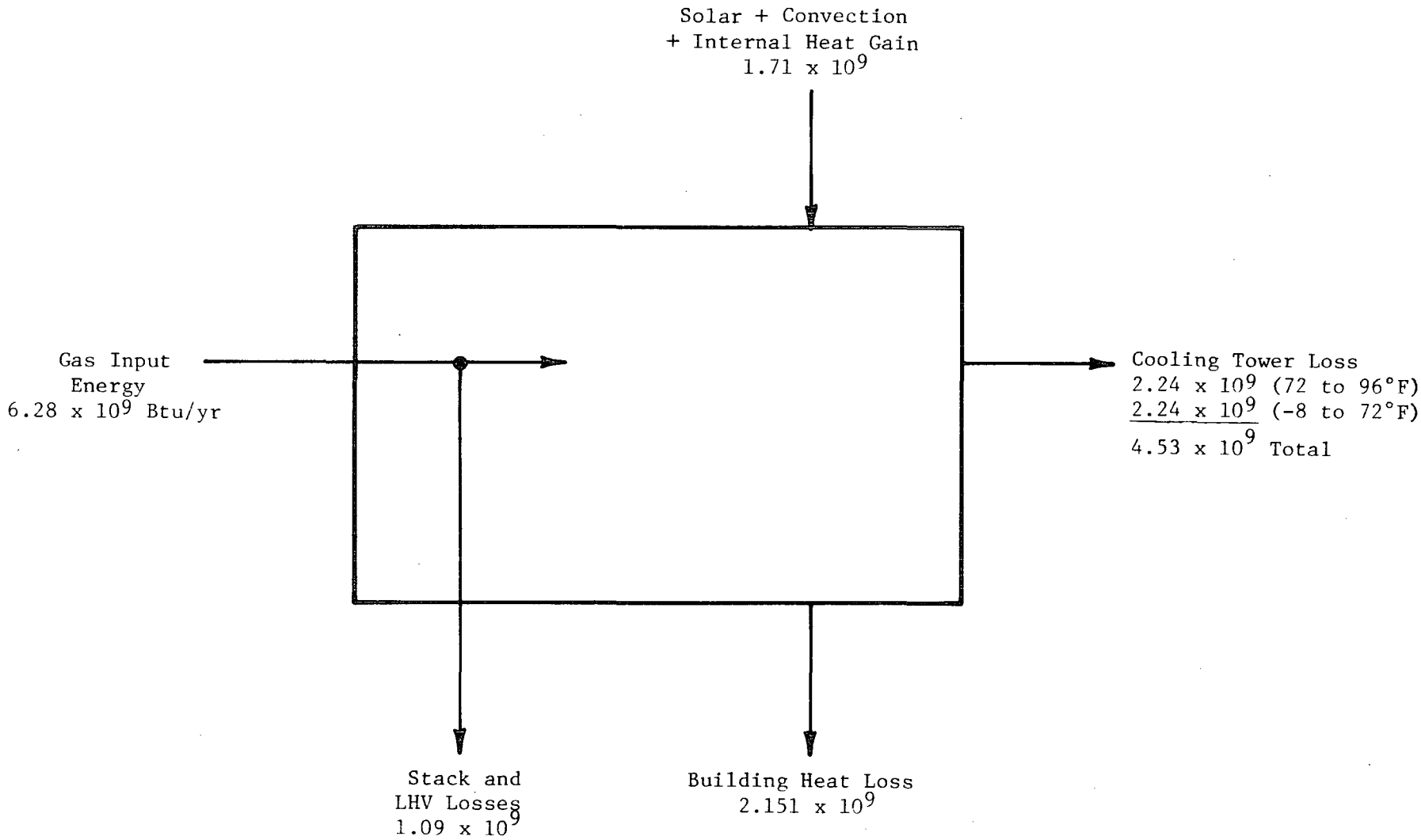

Fig. 2.1-12 Yearly Heat Balance

792472

to the LSM size. However in order to effect the above energy cost savings, a multiplicity of these tanks would be required, further reducing the attractiveness of the system.

- In Temperature Range 2 (56 to 72°F) heat pumping and thermal storage was even less attractive. Here, the heating requirement was relatively low and represented only 8% (0.17/2.18) of the annual heating requirement.

2.1.3 Recommendations for Second Iteration of the LSM System Design

Two basic requirements evolved out of the initial LSM System Design. They are as follows:

- Consideration of alternate sources for heat pumping. One source, which was not included in the first system, was external source heat recovery. However, the wide temperature head which the heat had to be pumped across seriously limited the effectiveness of this source. A second source, ventilation exhaust from the building, was identified as being more attractive, yet somewhat limited in capacity.

- Consideration of alternative means of loading the steam expander. Since the HVAC System distribution equipment (fans and pumps) required a large electrical load, the logical alternative means of loading the steam expander would have been the addition of an electrical generator. In certain respects, the system then became similar, but not identical to, the familiar cogeneration and total energy concepts. The presence of the electrical generator greatly enhanced the design flexibility in sizing the steam-Rankine system and in designing the manner in which the system could be controlled. If an induction motor was used as the electric generator, then the system in effect had two drivers (turbine and induction motor) and two driven loads (compressor and induction generator). Thus, the induction motor alternately served a dual purpose. This concept is explained in greater detail in Section 3.4.

  The concept of on-site power generation of the electrical parasitics could potentially improve the energy utilization as well as

the cost effectiveness of the system. The first LSM had one major driven load, the heat pump compressor. During periods of moderate heat requirements, the cooling load (heat source) was small or nonexistent. Under these conditions the turbine ran lightly loaded, almost idleing at reduced efficiency. At the same time, additional gas had to be fired to supplement the heat rejected from the steam expander. By adding the generator, the load for the turbine could be provided and supplemental firing reduced or eliminated. Concurrently, energy which would otherwise be consumed at the electrical power plant would be displaced. More importantly, especially for the user, the generator reduced electrical power costs, both metered and demand, while expanding the base for deriving energy cost savings for the LSM system by a factor of 5 to 10. The cost savings would depend upon current metered energy rates and building heating/cooling requirements.

2.2 Second System Analysis Iteration

The second LSM System Design Analysis was also generated under Task VI-2 of this contract. Its objective was to improve the LSM's overall performance by incorporating the recommendations from the first analysis, plus any other improvements which developed through the study. The major emphasis, as seen in Figure 2.2-1, focused upon system marketability as influenced by operating (energy) cost savings and capital costs of the system. According to the W.E. Hill LSM Market Survey (see Appendix Volume VI), conducted early in the LSM Program, the capital cost should not have exceeded 150% of the conventional primary heating/cooling equipment cost. The LSM's operating cost savings should have offered the user a two to three year return on the incremental investment (premium). Thus, the objective was to maximize the potential marketability of the LSM by maximizing energy cost savings while minimizing LSM System cost using the two to three year payback period as the economic criteria.

2.2.1 Changes Made to the Initial System

The system modifications which were recommended by the first LSM study were incorporated into this analysis. The modifications consisted of adding three

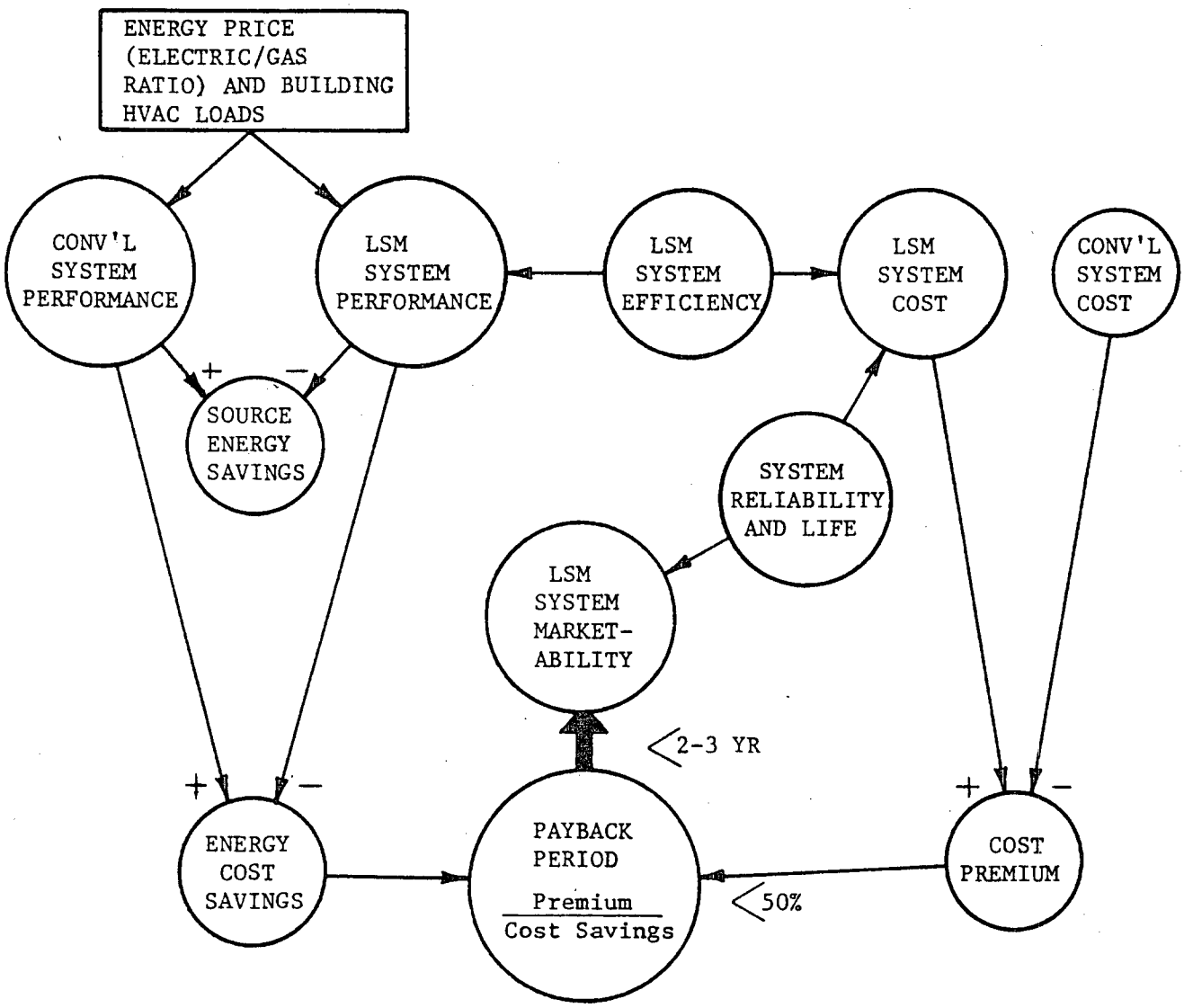

Fig. 2.2-1 System Design and Performance Factors which Influence Marketability of the LSM

/93199

subsystems: (1) building exhaust (ventilation) heat recovery, (2) outside air heat recovery, and (3) motor/generator. These subsytems are illustrated independently in Figure 2.2-2 and shown integrated into the LSM System schematic in Figure 2.2-3. In addition, an economizer cycle was included to relieve the winter cooling load (when beneficial) by drawing in colder air from the outside and venting a portion of the building's warm return air.

Drawing 1 shows the schematic of the LSM computer model. Algorithms were developed to describe the HVAC System's and the LSM's electrical accessory loads which include the air/water circulators and controls. Each one of these loads could either be supplied by the electric utility or the LSM system generator.

The model used the same temperature control schedule as illustrated in Figure 2.1-2 in Section 2.1. Thus, all the subsystems (steam Rankine and both refrigeration systems) could be independently modeled and linked together as shown in Figure 2.2-3 and Drawing 1. General performance characteristics, used as the basis for the model, included part-load characteristics of the subsystems as was described in Section 2.1. The performance of the steam turbine and refrigerant compressor C2 subsystems was not modified. The subsystem performance characteristics were developed for Compressor C1 (see Figure 2.2-4) on the basis of a high-efficiency, positive-displacement, screw type compressor with the same part-load performance as shown in Figure 2.1-9.

2.2.1.1 Heat Sources. The model utilized all the available heat sources in the following priority.

(1) Rejected heat from the steam Rankine-cycle condenser

(2) Recovered ventilation exhaust and cooling load

(3) Recovered heat from the outside through two-stage heat pumping

(4) Additional gas, which may have been required to meet the heating load if the previous three sources were depleted.

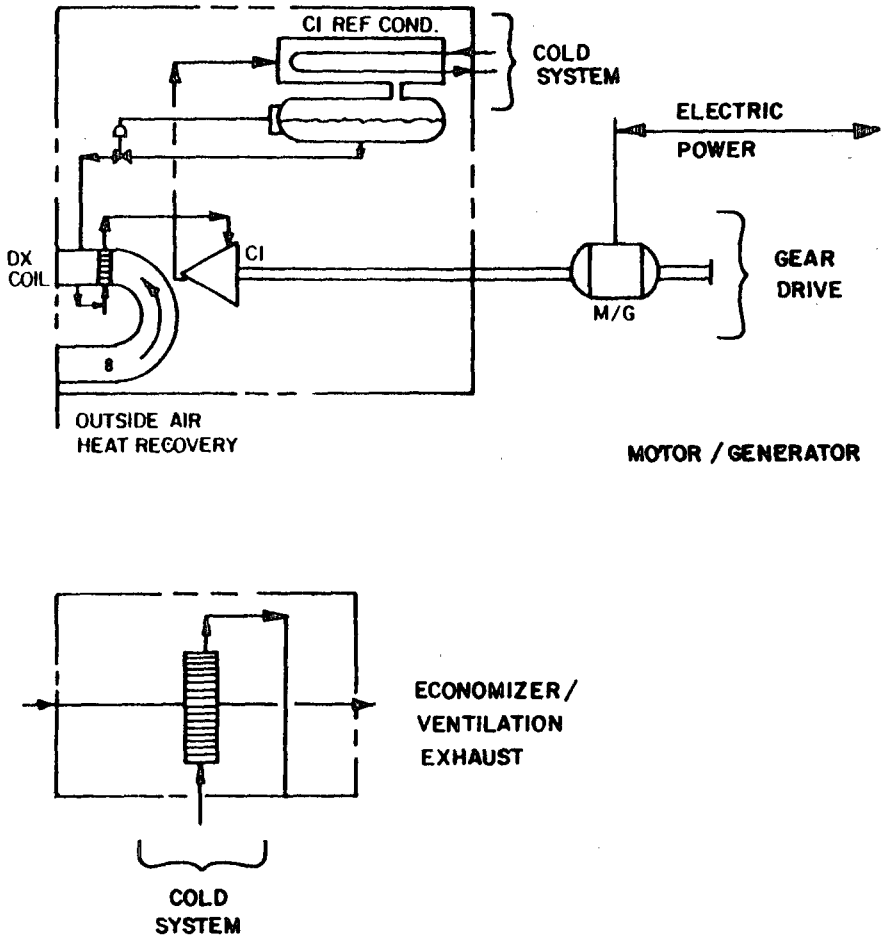

Fig. 2.2-2 Addition to First Model

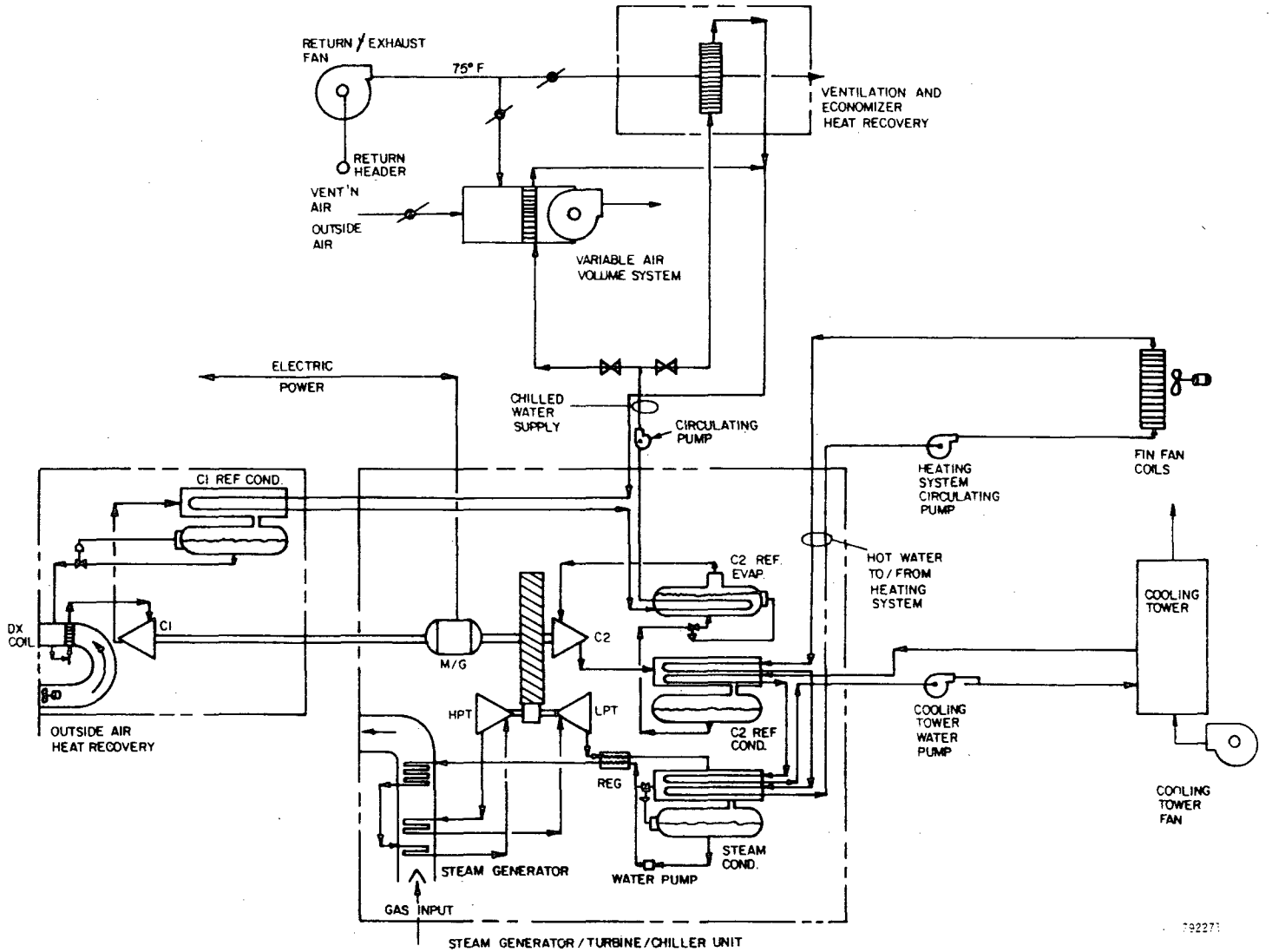

Fig. 2.2-3 125-Ton Gas-Fired Heat Pump System

MECHANICAL TECHNOLOGY INCORPORATED

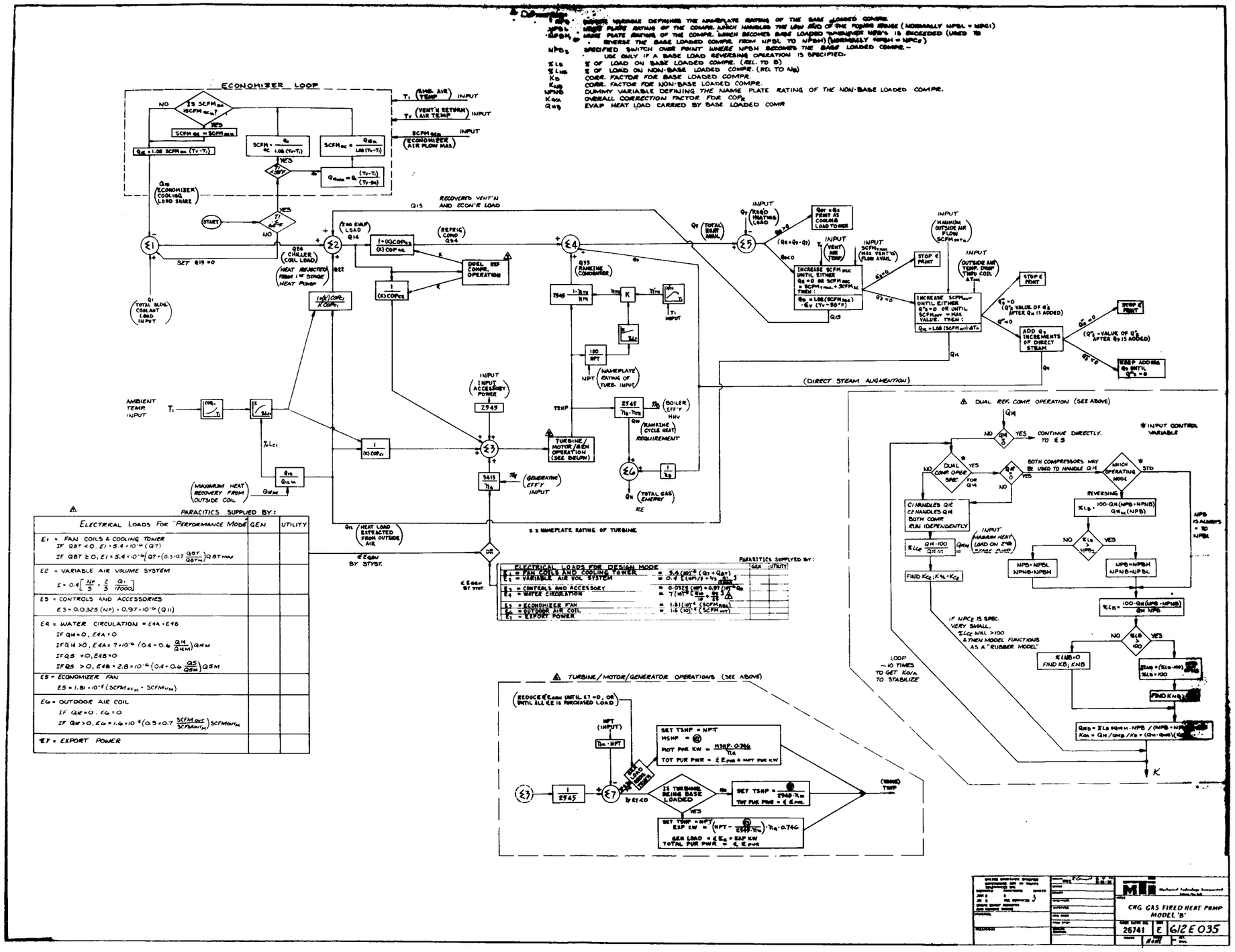
ECONOMIZER LOOP
DUAL REF. COMP. OPERATION (SEE ABOVE)
TURBINE/MOTOR/GENERATOR OPERATIONS (SEE ABOVE)
(DIRECT STEAM AUGMENTION)
RECOVERED VENT'N AND ECON'R LOAD
PARASITICS SUPPLIED BY:
ELECTRICAL LOADS FOR PERFORMANCE MODE
ELECTRICAL LOADS FOR DESIGN MODE
CNG GAS FIRED HEAT PUMP MODEL "B"
26741
612E035

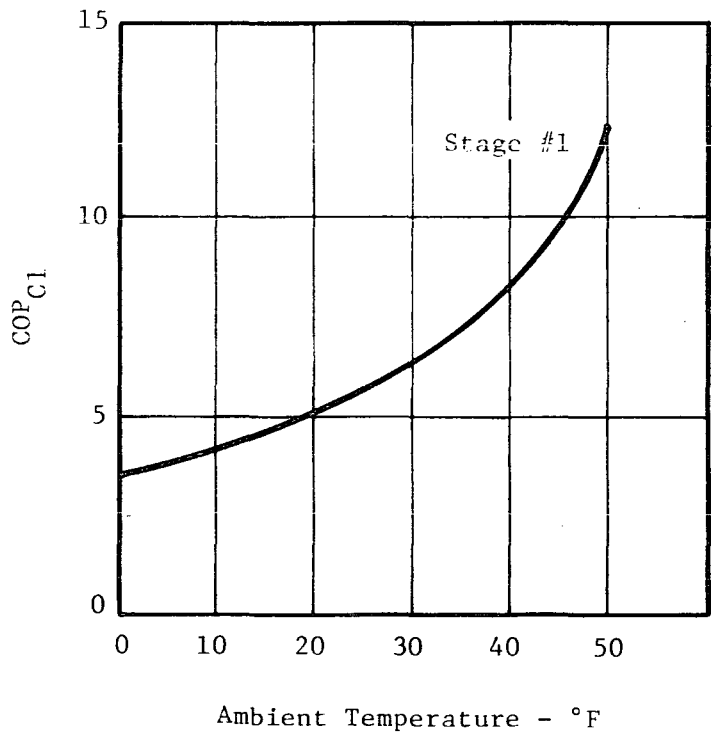

Fig. 2.2-4 COP_C versus Ambient Temperature for C1 Compressor - Pumping Heat from the Ambient and Discharging it into the Chilled Water Circuit of C2 Compressor

792488

MECHANICAL TECHNOLOGY INCORPORATED

By judicious selection of input variables, all heat recovery from (2) and/or (3) could have been eliminated to study sensitivity of system performance to the heat source. The results of these studies are shown later.

2.2.1.2 Modes of Control. A dual compressor operating mode was modeled to reduce compressor power consumption in the cooling mode and reduce machinery cost (for an external source heat pumping system). The mode was modeled by paralleling the two compressors and sizing their combined output to handle the maximum summer cooling load. Thus the installed compressor capacity could be reduced and better utilization achieved. Figure 2.2-5 illustrates the piping arrangement for winter and summer operation.

A potential power savings advantage existed with the dual compressor operation, particularly in the summer (cooling season). In this mode, each compressor disengaged whenever its evaporator load was zero. Figure 2.2-6 illustrates the relative advantages of base loading the smaller compressor at low capacities. The sudden reduction in the COP correction factor, K, at capacities greater than 33% was attributed to the start-up and low part-load performance of the larger compressor. At capacities greater than 35% there was an advantage to base load the larger machine and shut down the smaller. This concept was called "Dual Compressor-Reversing Mode" which was easily modeled to analyze the operating cost incentives which might offset the added control complexity. Table 2.2-1 illustrates the effectiveness of this control mode.

Two control modes were modeled for the steam power cycle. They consisted of base loading the turbine (at its nameplate rated output) and modulating (non-base loading) the turbine output, producing only the power required by the compressor(s) and the generator. Figures 2.2-7 through 2.2-11 graphically show the difference between the two control modes. The figures also illustrate the influence of the specified turbine size on other system components (primarily size) and on the key elements which effected the system's energy costs (gas and electric consumption and electric demand charge). Figure 2.2-7 shows that the HVAC system's energy needs were composed of: fixed mechancial parasitics such as lube oil pump, steam generator feedwater pump, and steam generator burner fan; variable mechanical parasitics such as gear mesh losses and bearing losses; compressor (chiller load) and the HVAC system electrical parasitic loads such as air/water circulators and controls.

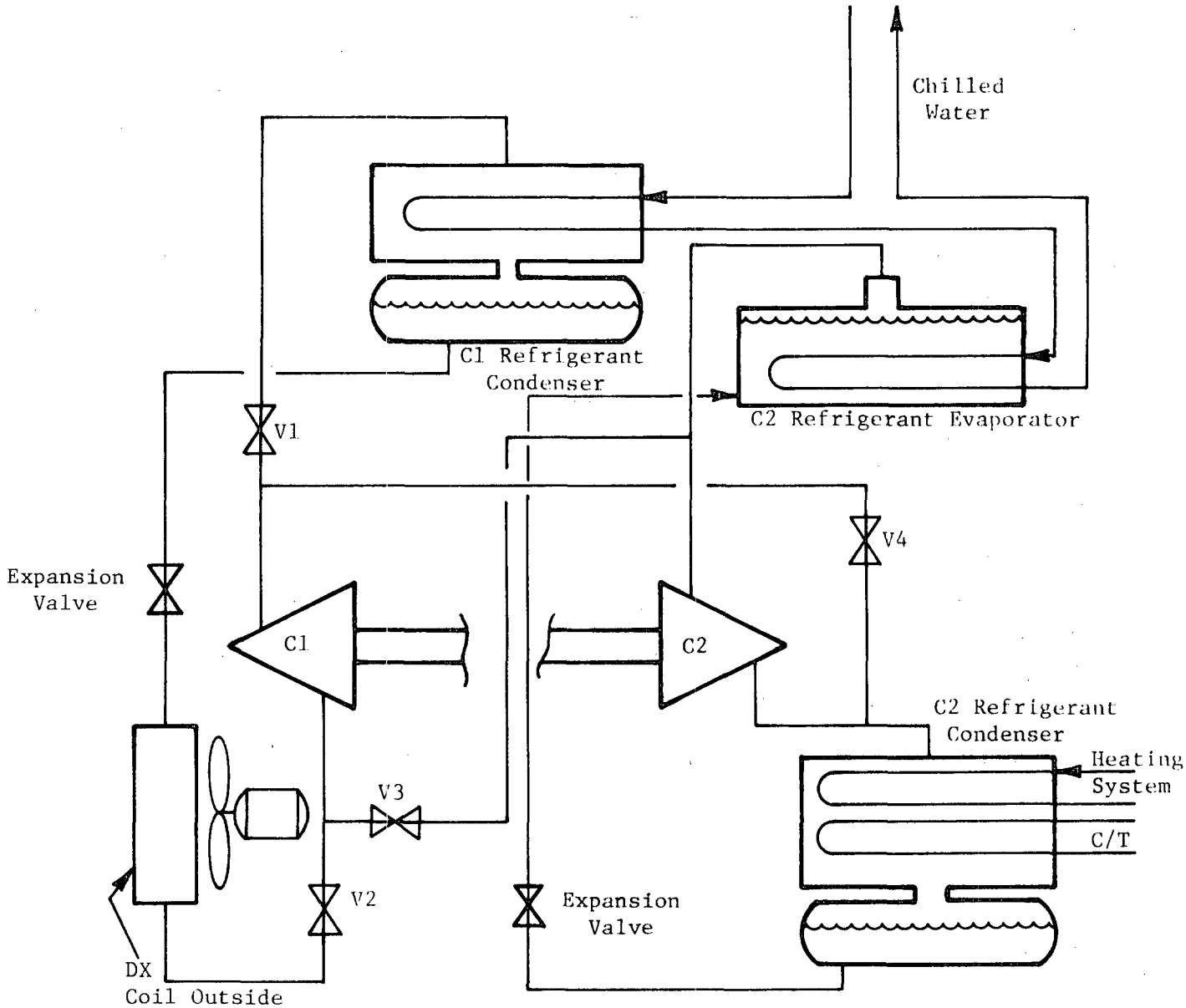

		Valve/Position			
Season	Mode	V1	V2	V3	V4
Winter	Heat Pumping	O	O	C	C
Summer	Cooling	C	C	O	O

O - Open C - Closed

Fig. 2.2-5 Crossover Piping Schematic for Dual Compressor Operation in a Two-Stage Heat Pumping Configuration

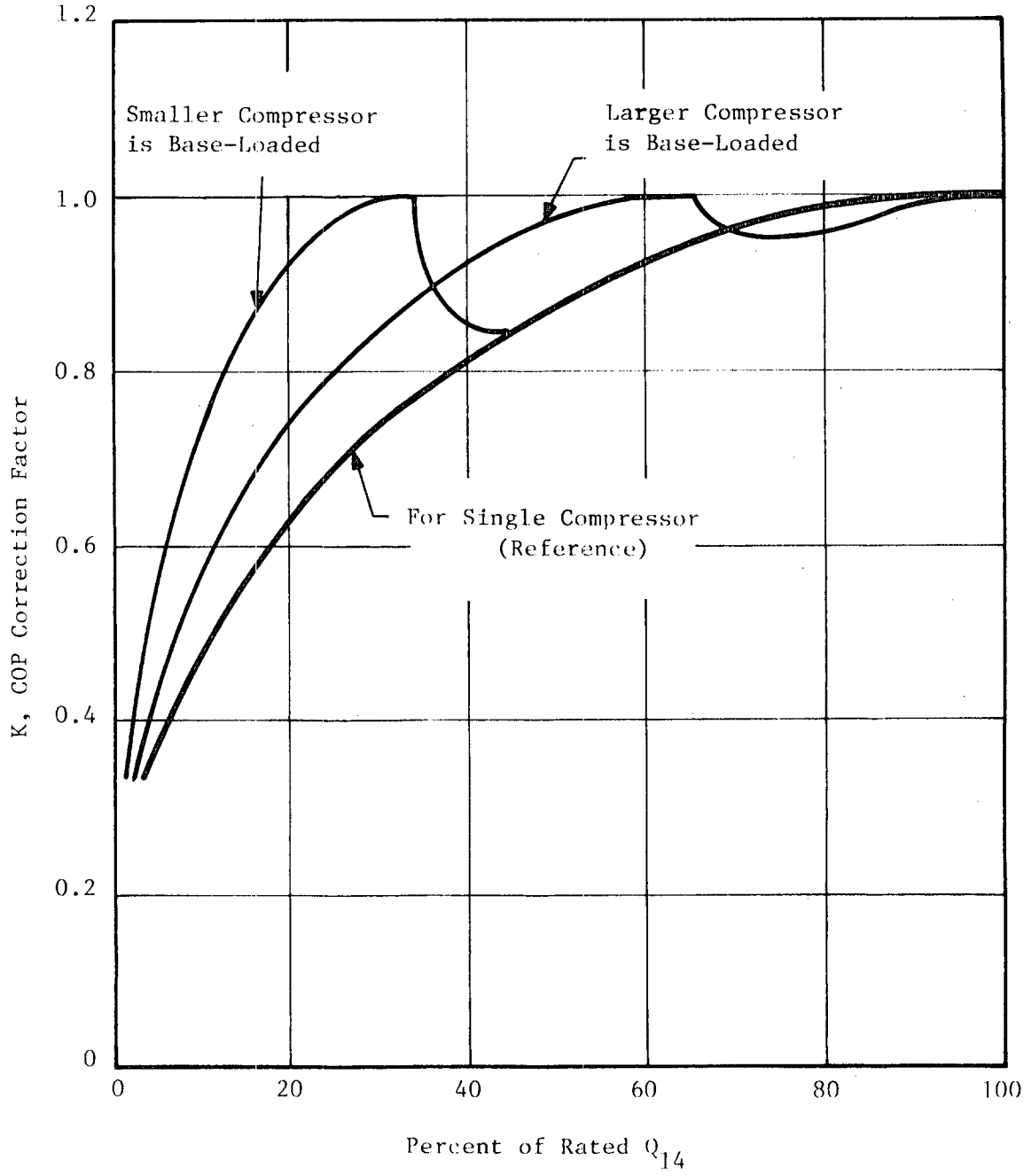

Fig. 2.2-6 Cooling COP Correction Factor for Single and Combined Factor for Dual Compressor Mode with Larger Compressor Size = 2x Smaller Compressor

TABLE 2.2-1

EFFECT OF COMPRESSOR OPERATING MODE ON CHILLER COMPRESSOR POWER REQUIRMENTS

COMPRESSOR CONTROL MODE	COMPRESSOR POWER REQUIREMENT hp-hrs	PERCENT INCREASE	SEASONAL AVERAGE COMPRESSOR POWER REQ'T hp
"RUBBER MODEL"(1)	123,083	BASE	68.8
DUAL-REVERSING(2)	134,043	8.9	74.9
DUAL (NONREVERSING)	140,077	13.8	78.3
STANDARD (SINGLE FULL-SIZE UNIT)	163,026	32.5	91.1

(1) In the "Rubber Model" mode the compressor was assumed to operate at peak efficiency regardless of the chiller load.

(2) In the dual compressor mode, the name plate rating of the large compressor is twice as large as the smaller one.

MECHANICAL TECHNOLOGY INCORPORATED

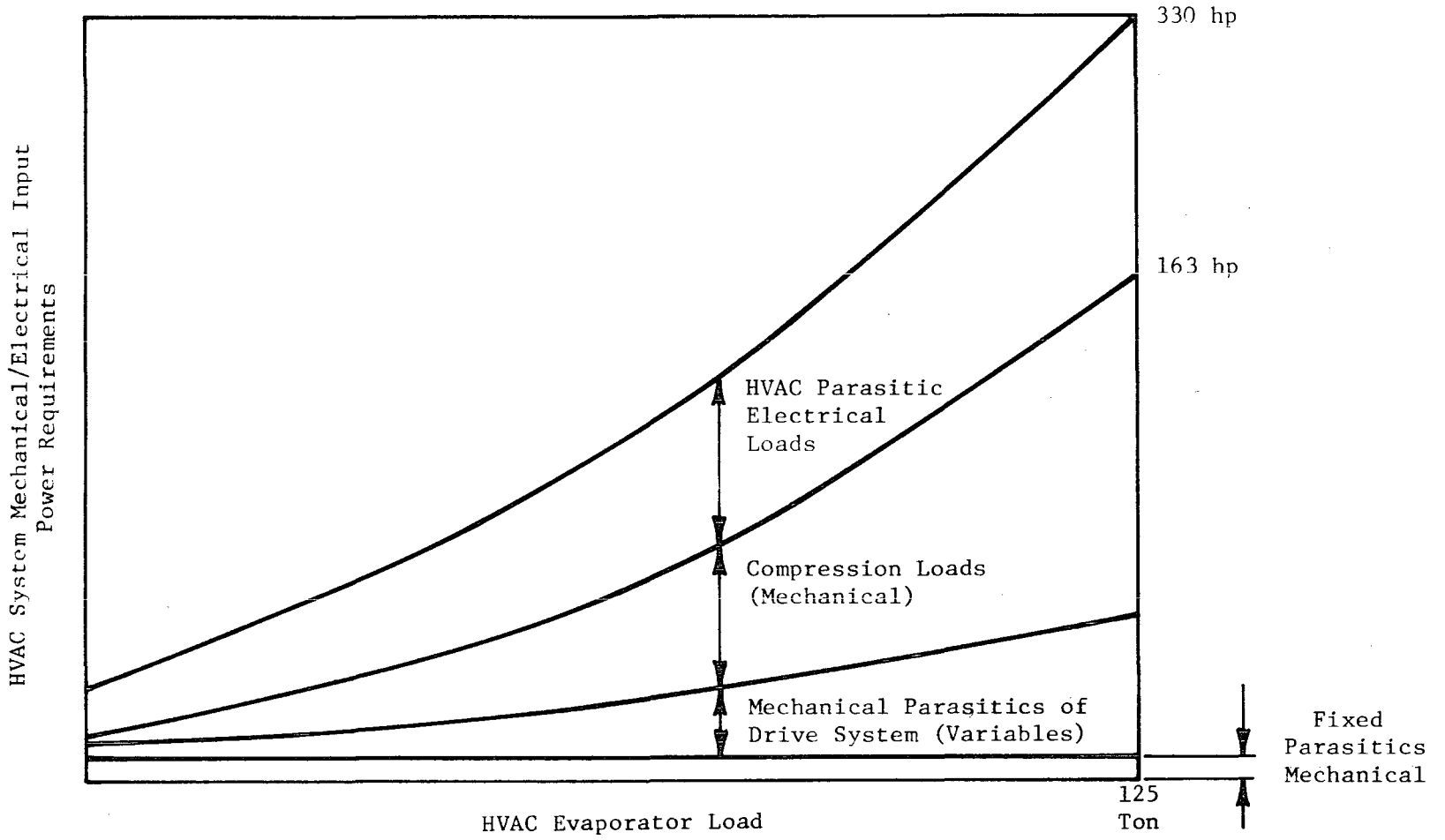

Fig. 2.2-7 General Relationship of HVAC System Mechanical and Electrical Input Requirements as HVAC Cooling Load Varies - For Steam Rankine Cycle Driven Chiller

792262

MECHANICAL TECHNOLOGY INCORPORATED

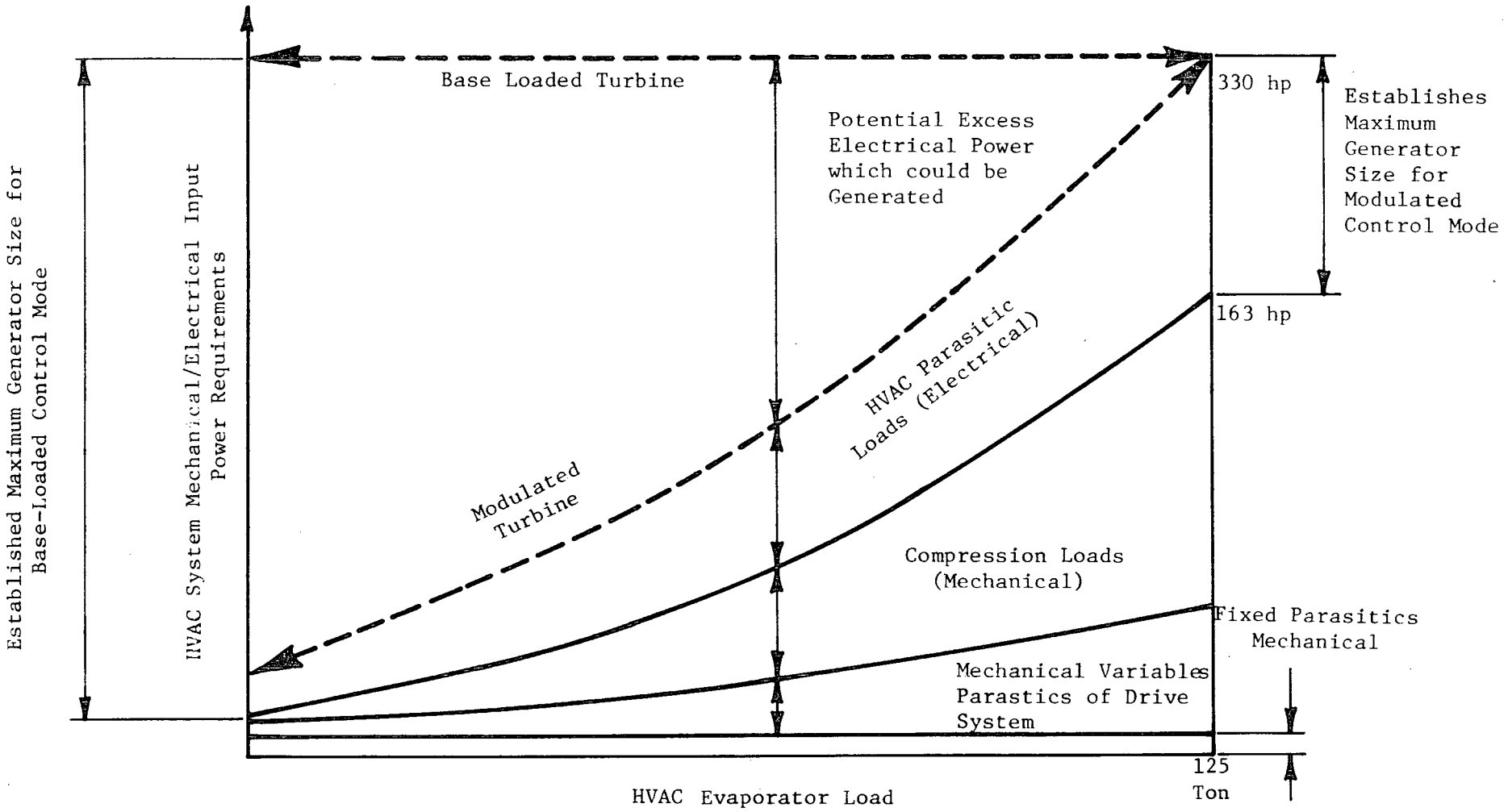

Fig. 2.2-8 Full Size Turbine - Totally Self-Sufficient with Respect to HVAC System Energy Requirements

792261

MECHANICAL TECHNOLOGY INCORPORATED

MECHANICAL TECHNOLOGY INCORPORATED

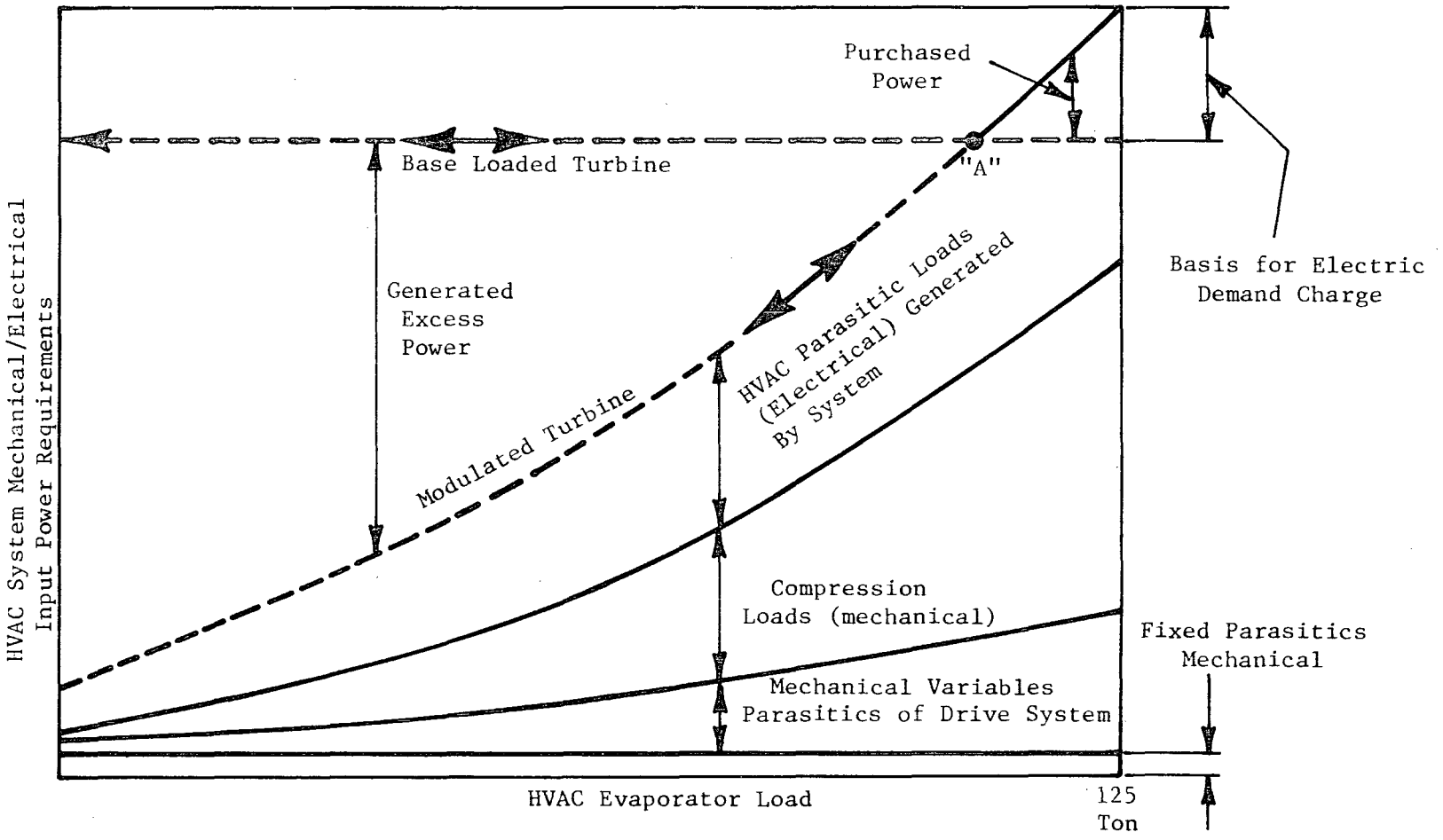

Fig. 2.2-9 Reduced Size Turbine-Purchasing Electricity for Part of HVAC Parasitic Loads During High A/C Load Conditions

792260

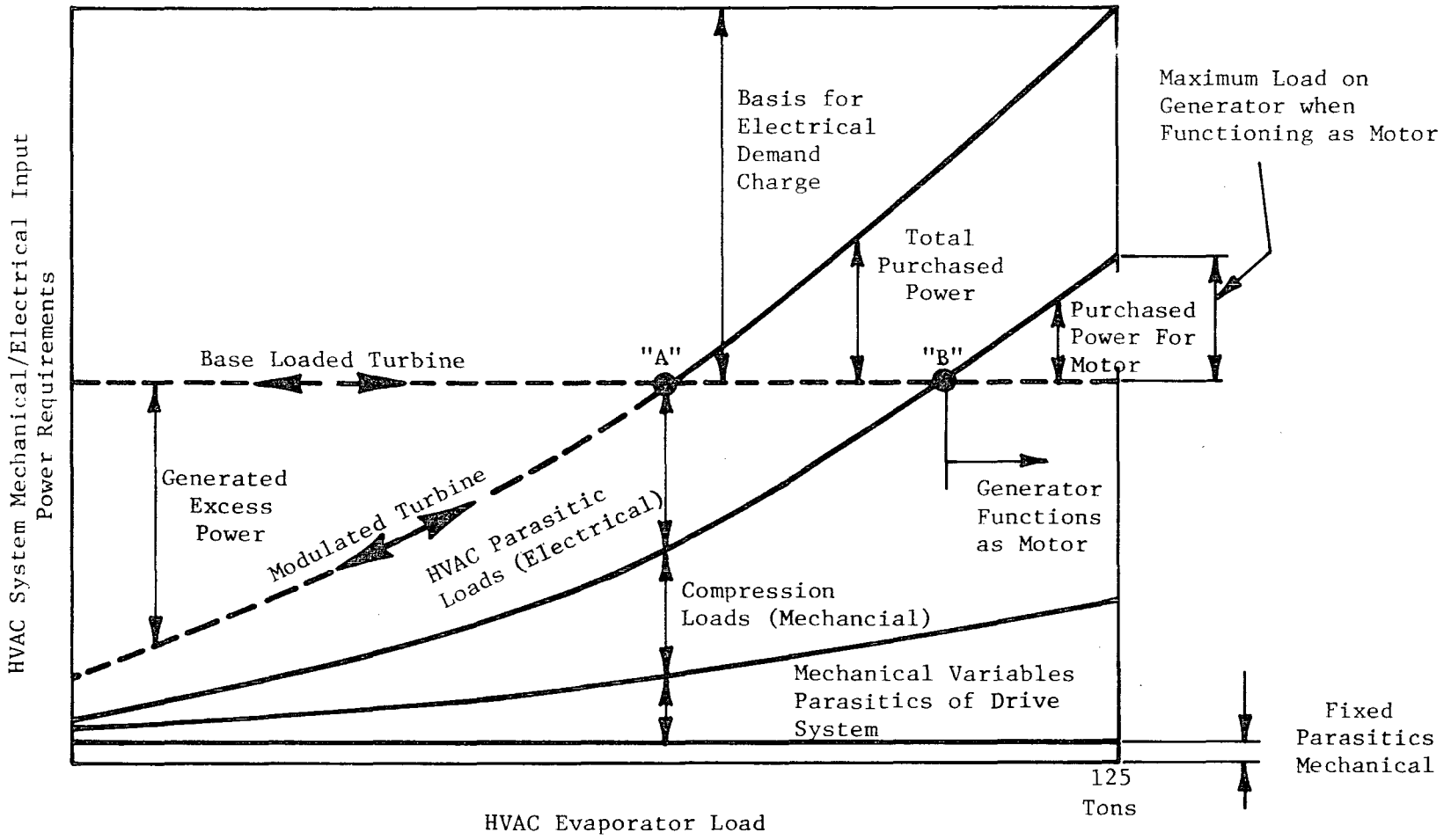

Fig. 2.2-10 Reduced Size Turbine - Here the Generator Functions as Motor to Assist Turbine when HVAC System Mechanical Load Exceeds Turbine Output

792258

MECHANICAL TECHNOLOGY INCORPORATED

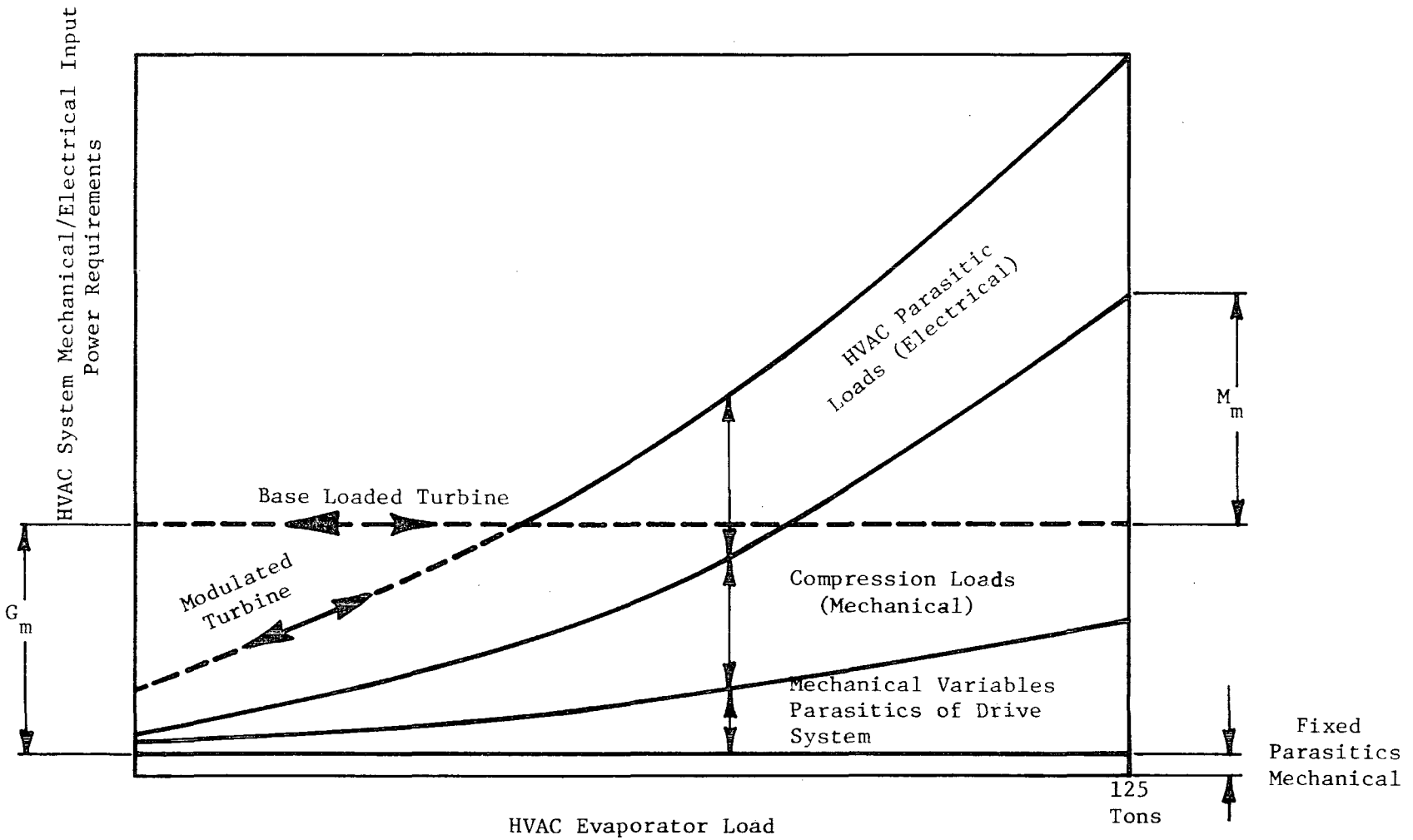

Fig. 2.2-11 Reduced Size Turbine - At a Turbine Size of 90 hp the Maximum Generator Load (G_m) also Equals the Maximum Load on Generator when it is Functioning as a Motor (M_m)

792259

The driver for a totally self-sufficient (electrical parasitics included) 125-ton HVAC system required a 330-hp output capability in the cooling mode. Figure 2.2-8 shows the load paths for a 330-hp turbine operated in the base-loaded mode and the modulated mode.

At full load conditions (125 tons) both control modes produced the same results. However, at reduced cooling loads excess electrical power was produced in the base-loaded mode. Also, since the system was electrically self-sufficient there was no electrical demand charge which was associated with the HVAC system. In the course of this study the assumption was always made that any excess power generation (beyond the HVAC system's requirements) could be utilized by the building displacing a portion of its normal electrical requirements. In the case of the full-size base-loaded turbine driver, it was unlikely that such a condition could be met. Dumping electrical power back into the grid during periods of low cooling loads would occur in this case.

Figure 2.2-9 illustrates the manner by which the excess generated power, purchased power and the basis for the demand changes were affected by a reduction in turbine size. At evaporator loads greater than "A", both control modes produced the same results, Then the turbine drivers (in both control modes) were equally loaded at their maximum output. However, different sizes of generators were required for each control mode. Likewise, when the turbine size was further reduced to the level shown in Figure 2.2-10, point "A" moved to a lower evaporator load. Then, at higher evaporator loads, the generator started to unload and was totally unloaded (free wheeling) at point "B". At loads higher than "B", the generator began to function as a motor, assisting the turbine as they collectively drove the compressor and mechanical parasitics. In this case, some of the power requirements for the primary HVAC equipment were supplied from the electrical grid. Also, the size of the generator required for the base-loaded control mode was still larger than that required for the modulated turbine.

In the base-loaded mode there was a unique turbine size (see Figure 2.2-11) where the maximum generator load (G_m) equaled the maximum load (M_m) on the generator when it functioned as a motor.

2.2.2 Parametric Studies

The objective of the parametric studies, as illustrated in Figure 2.2-1, was to establish a balanced system design which offered the maximum potential of meeting the marketability criteria for the product, i.e. a maximum premium of 50% over conventional primary equipment cost with an energy cost savings resulting in a two to three year payback on the incremental investment.

The two most influential factors were the system cost and energy cost. Energy costs were based upon gas costing $\$2.2/10^6$ Btu Higher Heating Value (HHV), metered electricity at \$0.04/kW-hr ($\$11.72/10^6$ Btu) and an electrical demand charge of \$3/mo/peak annual kW demand for the HVAC system. A credit was taken for excess electric power generated at the rate of \$0.04/kW-hr.

Hourly building HVAC loads were obtained from the Merriwether building simulation program for a typical office building in a Cleveland location. These loads were sorted with respect to simultaneous heating loads, cooling loads, and ambient temperatures with upper and lower limits applied to each. Thus these three parameters formed a three-dimensional array of elapsed time at averaged heating loads, cooling loads and ambient temperatures. This technique reduced the total number of loading conditions from 8760 to about 120. These loading conditions are shown in Attachment E and summarized in Table 2.2-2. The following factors were evaluated parametrically: turbine size; control mode, i.e., base loading the turbine and modulating the turbine; generating the HVAC electric parasitic power requirements or purchasing them; and evaluating sensitivity to heat sources (heat pumping).

Figure 2.2-12 compares the annual energy costs for a range of turbine sizes, modes of turbine control and effect of power generation for HVAC parasitics. Two main conclusions could be reached from this analysis: (1) it was beneficial to generate electricity for the HVAC electrical parasitics, and (2) base loading the turbine produced higher energy cost savings than modulating the turbine output. On the basis of this study, the decision was made to generate as much of the electrical parasitics as possible; however, the issue of turbine size and mode of control required further analysis.

TABLE 2.2-2

SUMMARY OF BUILDING HVAC DATA USED IN PARAMETRIC STUDIES

Gross Annual Cooling Requirement	= 2.8×10^9 Btu
Net Annual Cooling Requirement (if Economizer used)	= 1.8×10^9 Btu
Gross Annual Heating Requirement	= 1.6×10^9 Btu
Peak Cooling Load	= 1.5×10^6 Btu/hr (125 tons)
Peak Heating Load	= 1.0×10^6 Btu/hr

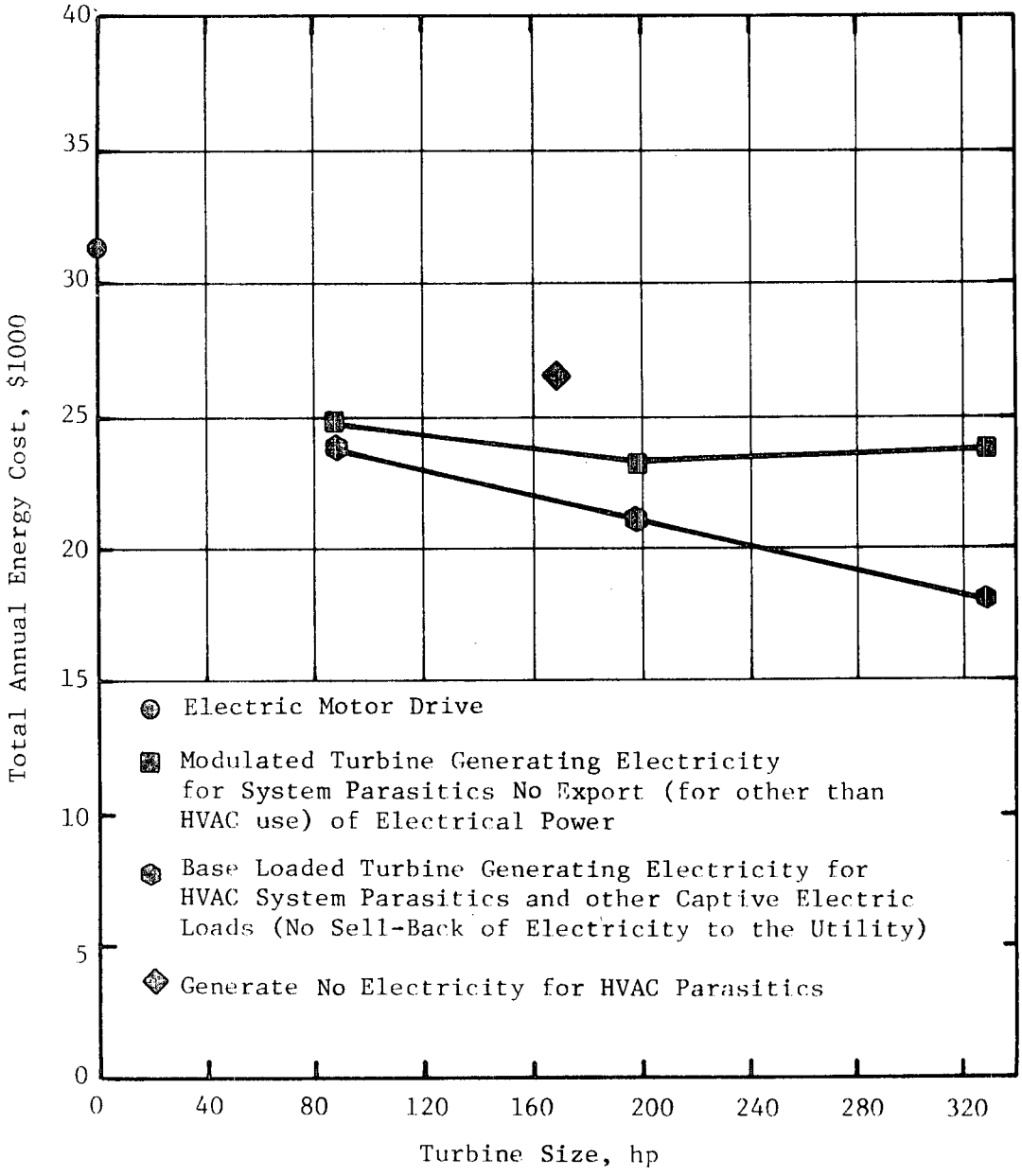

Fig. 2.2-12 Comparative Annual Energy Costs

Figures 2.2-13 and 2.2-14 show how other major equipment components in the steam-Rankine power cycle were influenced by the steam turbine size. Table 2.2-3 compares these equipment sizes with those required in a conventional electric motor driven chiller and gas fired steam generator. Differences in equipment requirements (particularly motor/generator size, steam generator size and cooling tower size) suggested that the small turbine size offered the highest potential of keeping within the 50% cost premium constraint. Figure 2.2-15 shows the anticipated trends in system cost as a function of the turbine size and mode of control. At turbine sizes above 90 hp, the generator size required for the base-loaded mode was significantly higher than for the modulated design (shown in Figure 2.2-14) particularly with the full size (330 hp) turbine. However, at the 90 hp turbine size the generator/motor size (75 hp) was identical for both modes of control, leaving the base-loaded concept with a cost advantage on system controls.

Considering the total installed driver horsepower (Figure 2.2-14) as a measure of cost of the system and the energy savings derived from Figure 2.2-12, the annual energy cost savings per installed driver horsepower could be derived. This cost savings, as shown in Figure 2.2-16, suggested that the 90-hp, base-loaded concept had the most potential.

The 90-hp selection was also supported by the sensitivity of annual energy cost savings to changes in gas and electric base rates and electric demand charges. Figure 2.2-17 illustrates the high degree of volatility which existed with large turbine drivers at even relatively small (10%) changes in metered energy rates and demand charges. The 90-hp turbine size offered the highest degree of energy operating cost stability. Table 2.2-4 shows the energy cost distribution for the base case shown in Figure 2.2-17.

The annual energy costs, based on the utilization of various heat pump sources, were calculated for both the 90-hp, base-loaded turbine concept as well as for a conventional system using an electric motor to drive the double-bundle chiller. Figure 2.2-18 presents the results of this study. Since most of the heating load could be supplied by the steam condenser, the energy costs for the steam-Rankine driven system had little relation to the heat pumping sources. The energy cost picture was not significantly affected by the small

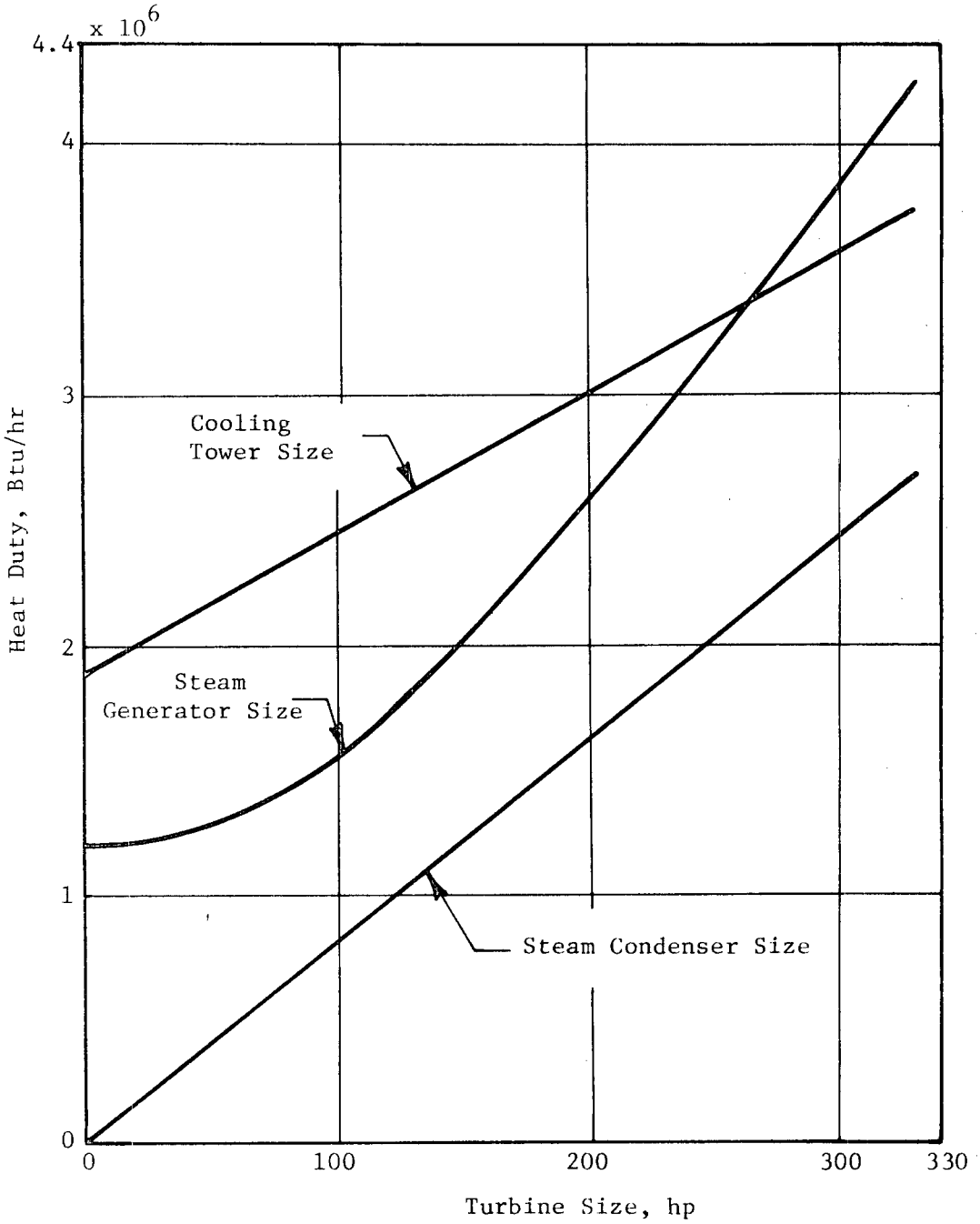

Fig. 2.2-13 Heat Exchanging Equipment Size Requirement as a Function of Steam Turbine Driver Size

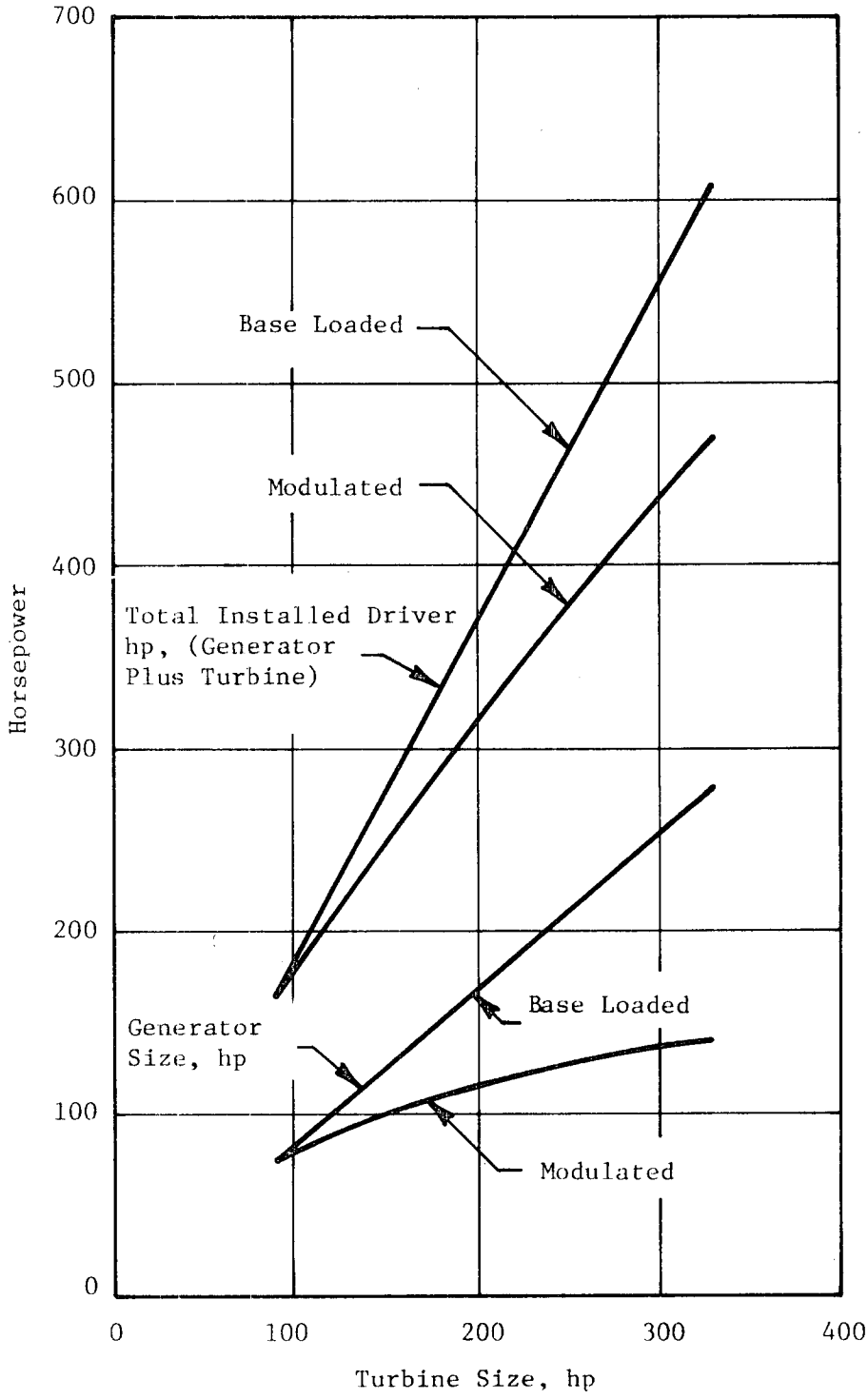

Fig. 2.2-14 Rotating Machinery Size Requirements as a Function of Steam Turbine Driver Size. (Base Loaded and Modulated)

TABLE 2.2-3

COMPARISON OF MAJOR SYSTEM COMPONENT SIZES FOR VARIOUS TURBINE SIZES AND A CONVENTIONAL ELECTRIC-MOTOR-DRIVEN CHILLER PLUS A GAS-FIRED BOILER

Component	Conventional Boiler/ Chiller HVAC	Turbine Size, hp (Nameplate)					
		90		200		330	
		B	M	B	M	B	M
Motor/Generator (hp)	150	75		168	115	278	141
Compressor (hp)	150	150		150		150	
Steam Generator (10^6 Btu/hr Input)	1.2(L)	1.5(H)		2.6(H)		4.3(H)	
Cooling Tower (10^6 Btu/hr)	1.9	2.4		3.0		3.7	
Steam Condenser (10^6 Btu/hr)	Not Required	.7 Turbine .3 Bypass 1.0 Total		1.6		2.7	

B - Base Loaded Turbine

M - Modulated Turbine and Steam Generator

L - Low Pressure and Temperature

P - High Pressure and Temperature

MECHANICAL TECHNOLOGY INCORPORATED

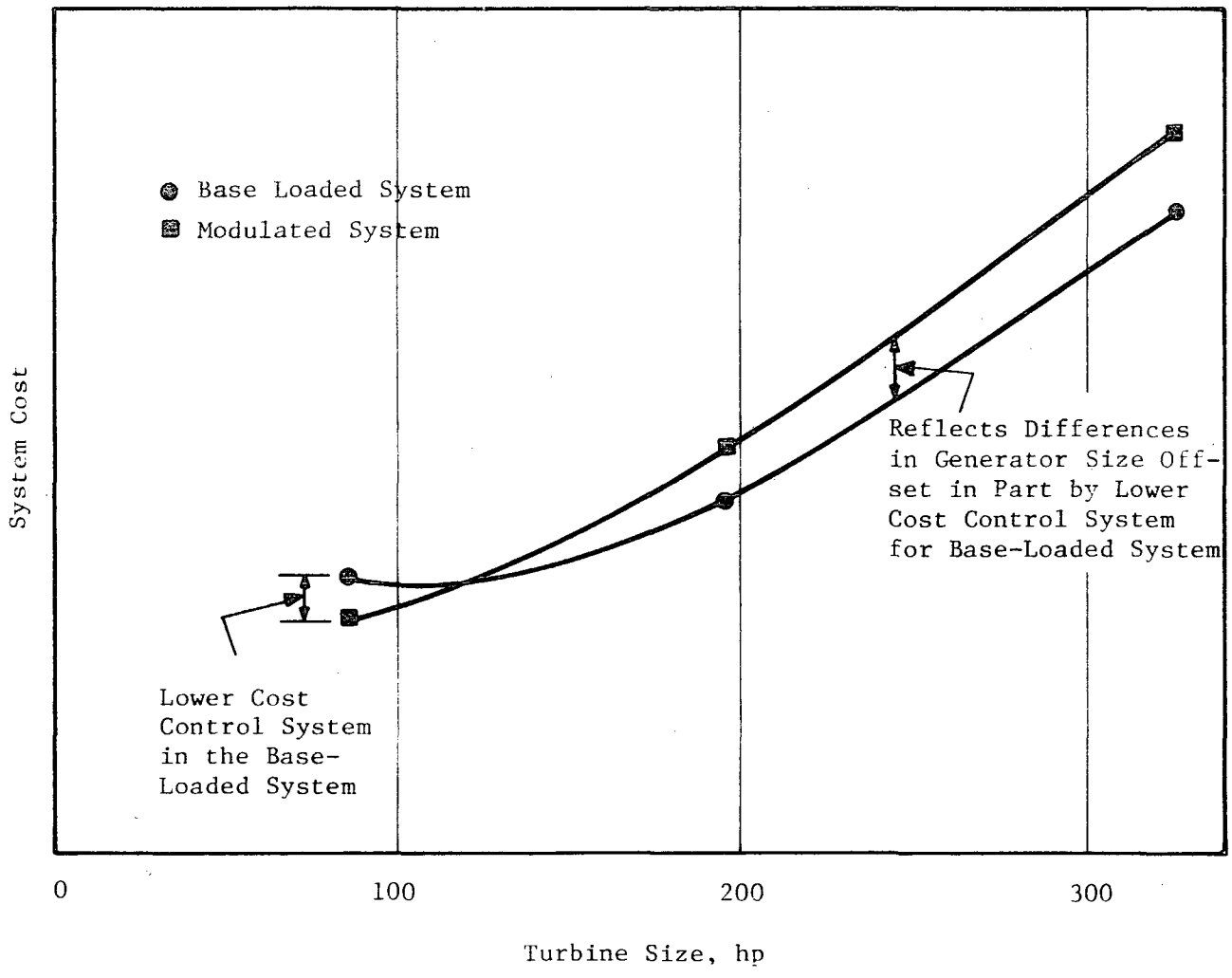

Fig. 2.2-15 Anticipated Trends in System Cost as a Function of Turbine Size and Mode of Control

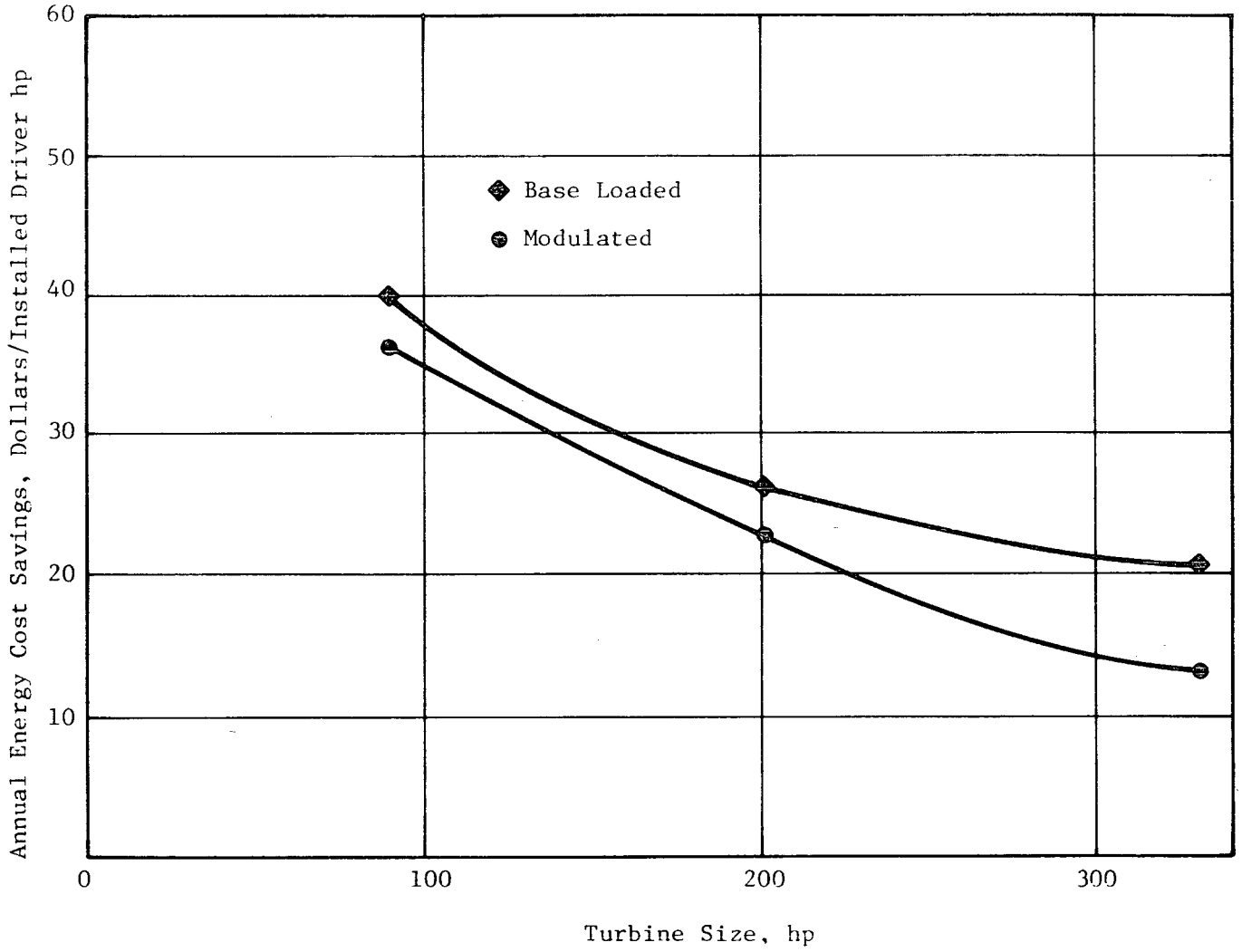

Fig. 2.2-16 Annual Energy Cost Savings per Total Installed Driven Power; Includes Turbine and Generator Power Rating

792267

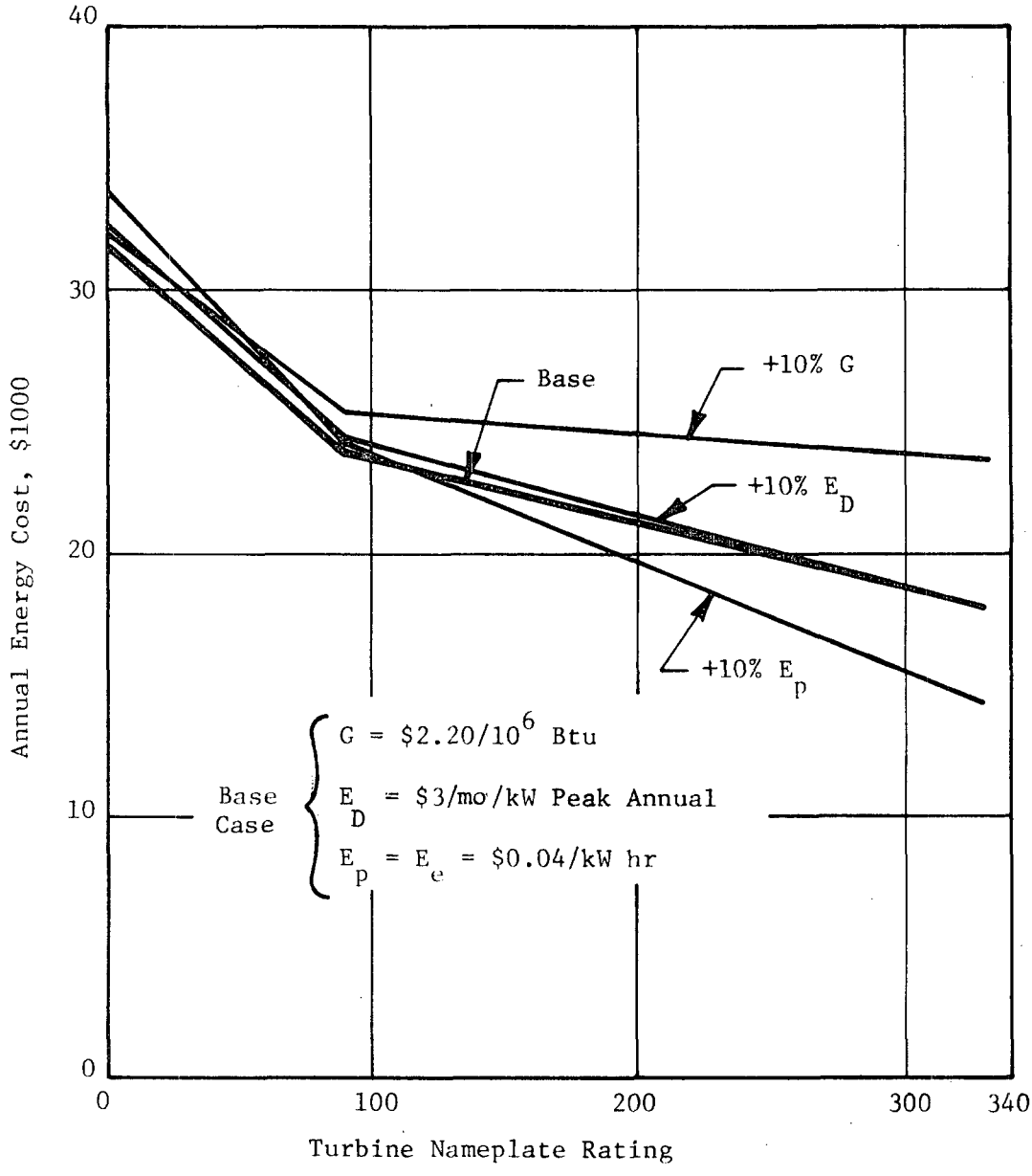

Fig. 2.2-17 Annual Energy Cost Sensitivity to Increase in Energy Rates - 90 hp Base-Loaded Turbine Driver

792266

TABLE 2.2-4

DISTRIBUTION OF ANNUAL ENERGY COSTS

Cost Component	Turbine Size, hp			
	Base(5)	90(4)	200(4)	330(4)
Cost of Gas (1)	$ 3,993	$15,030	$33,384	$55,150
Cost of Purchased Electricity (2)	18,922	6,239	1,744	2
Credit for Excess Gen'd Power (2)	---	(2,710)	(16,868)	(37,181)
Annual Demand Charge (3)	7,609	5,345	2,860	142
Total Annual Operating Cost	$30,524	$23,904	$21,120	$18,113
Savings	---	$ 6,620	$ 9,404	$12,411

1) @ $\$2.20/10^6$ Btu

2) @ 4¢/kW-hr

3) @ $3/mo/peak annual kW demand

4) Base loaded turbine operation generating electricity, annual heating load = 1.6×10^9 Btu, annual net cooling load = 1.8×10^9 Btu, 7,335 hr HVAC system operation, 2,103 hr chiller compressor operation, 162,354 hp-hr of chiller compressor load

5) Conventional boiler heating system assuming 83% thermal effeciency with electric motor driven chiller (not heat pumping)

MECHANICAL TECHNOLOGY INCORPORATED

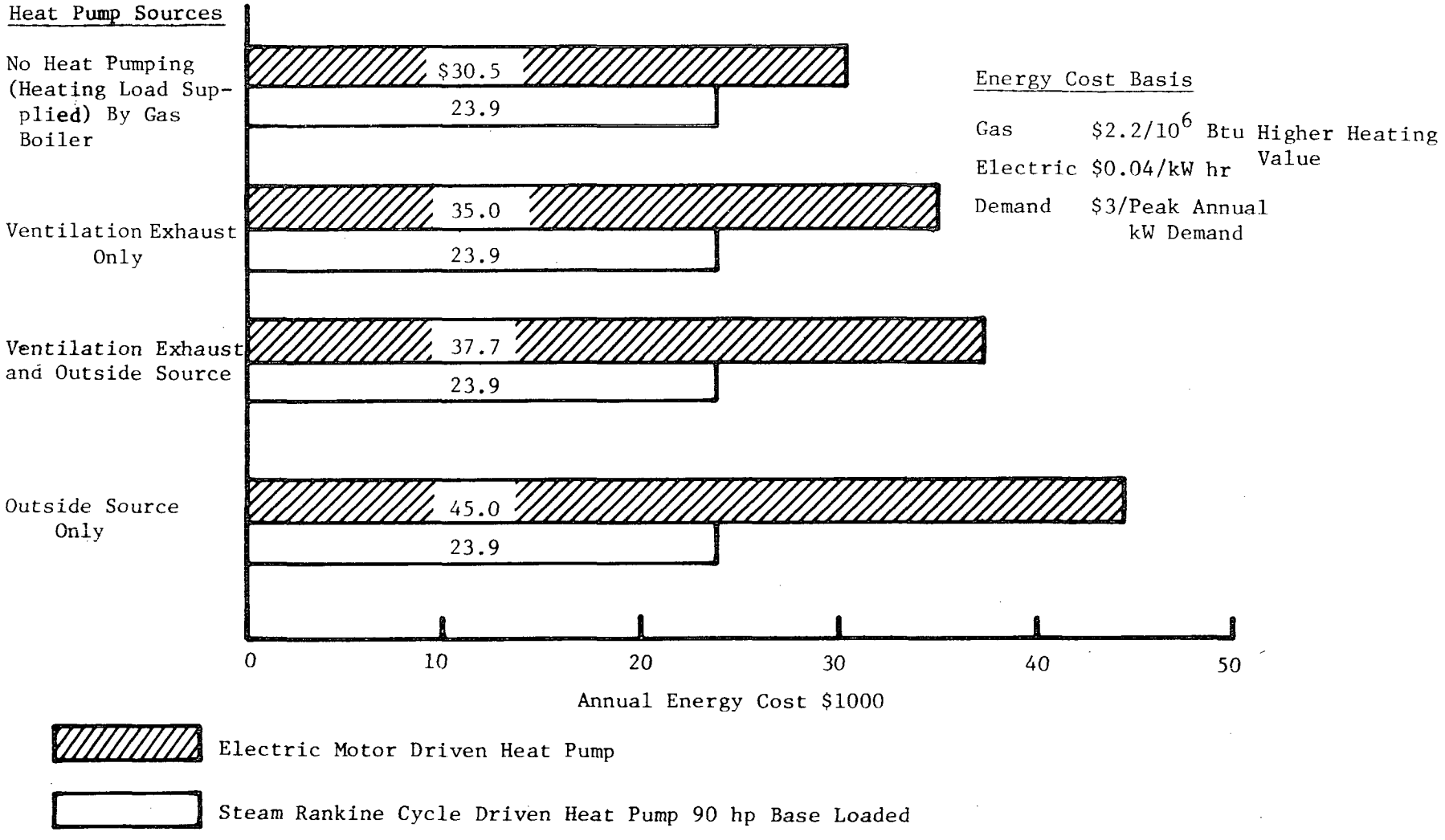

792263

Fig. 2.2-18 Annual Energy Cost/Heat Pumping Source Sensitivity for 90 hp Base-Loaded System and Electric Motor Driven Double Bundle Chiller using a Gas Boiler for Supplementary Heat

MECHANICAL TECHNOLOGY INCORPORATED

actual load required from heat pumping. In the case of the electric motor driven heat pump there was a moderate sensitivity to the heat pumping source. However, the lowest energy cost occurred without heat pumping while the entire heating load was supplied by a gas steam generator. The highest cost, which was expected, occurred when only the outside heat source was available.

Normally an electric driven heat pump installation included an electrically-fired supplementary steam generator instead of the gas-fired steam generator used in the Figure 2.2-18 analysis. The heat pump installations were generally "all electric" - perhaps because gas was not available. Therefore, this office building application was reanalyzed on the basis of an "all electric" installation. The results of that analysis are shown in Table 2.2-5 along with the distribution of the energy costs, which appear in Figure 2.2-18, for gas heating. These results showed that heat pumping could save energy and operating cost if straight electric-resistance heating was the alternative to heat pumping. The difference in equipment cost between the heat-pumping and without heat-pumping system was about $7000 for the second refrigerant condenser bundle, plus $6000 for a water storage tank (if one was used). Therefore, the nearly $9000 per year energy cost savings (for the all-electric case) could have easily provided an attractive payback period for the user. However, if gas had been available for heating, then heat pumping was counterproductive even when internal heat sources (the most effective sources) were available. This counterproductiveness was applicable when an electric motor was used to drive the heat pump. Economically, heat pumping became even less attractive if a heat engine (like the steam-Rankine cycle) was substituted for the electric motor and the engine's rejected heat was available for the building's space heating needs. Then, the dollar value of the heat required from the heat pump decreased to less than $200/year of gas - far too small a base to justify the second ($7000) bundle in the refrigerant condenser.

2.2.3 Conclusions from the Second LSM System Analysis

The following points summarize the conclusions of the second LSM System Analysis:

- The LSM system showed a reasonable energy cost savings which the first analysis failed to show.

TABLE 2.2-5

ANNUAL ENERGY COST FOR AN ALL ELECTRIC AND AN ELECTRIC/GAS CONVENTIONAL HVAC SYSTEM WITH AND WITHOUT HEAT PUMPING

Heat Source / Cost Category	Heat Pumping[1]		Not Heat Pumping	
	Electric	Gas	Electric	Gas
Space Heat — Gas	---	$ 1,090[2]	---	$ 3,993
Space Heat — Electric	$ 4,817[2]	---	$18,611	---
Electric for Chiller/ Heat Pump Motor	10,695	10,695	5,380	5,380
Electric for HVAC Distribution System	15,566	15,566	13,542	13,542
Electric Demand Charge	9,509[3]	7,609[4]	11,808[3]	7,609[4]
Total	$40,587	$34,960	$49,341	$30,524

(1) Internal source only, without heat storage

(2) Supplementary heat

(3) Winter peak demand

(4) Summer peak demand

MECHANICAL TECHNOLOGY INCORPORATED

- A 90-hp turbine size (or smaller) appeared to be the most promising from the aspect of total cost and sensitivity of energy rates.
- Generating electricity for the HVAC system accessories - fans, pumps, controls, etc., was beneficial when energy costs were considered.
- Heat pumping did not appear to be cost effective.
- The base-loaded turbine operating mode produced greater energy cost savings than the modulated control concept.
- Buildings with higher heating requirements, like the potential Mountwood Park test site, had the potential for even higher energy cost savings. The system's ultimate potential is presented in Figure 2.2-19.

2.2.4 Recommendations to Advisory Board, October 1978

The previous information and following recommendations were presented to the Advisory Board for their review on October 18, 1978:

- Base loading the steam power cycle is recommended in order to reduce system cost and complexity. Base loading also improves the energy cost savings.
- Fixing the turbine size at 90 hp and generating power with the 75-hp generator is recommended. The 75-hp generator also functions as a motor when the compressor load exceeds the net turbine output. Under certain conditions, some excess electrical power would be generated. This excess power would displace part of the normally purchased electrical power for the building. No power would be exported from the building.
- Freezing the system design is recommended. The program should now move on to Task IV-3, "Component Design".

The above recommendations were accepted and agreed to; commencing the "Component Design Task".

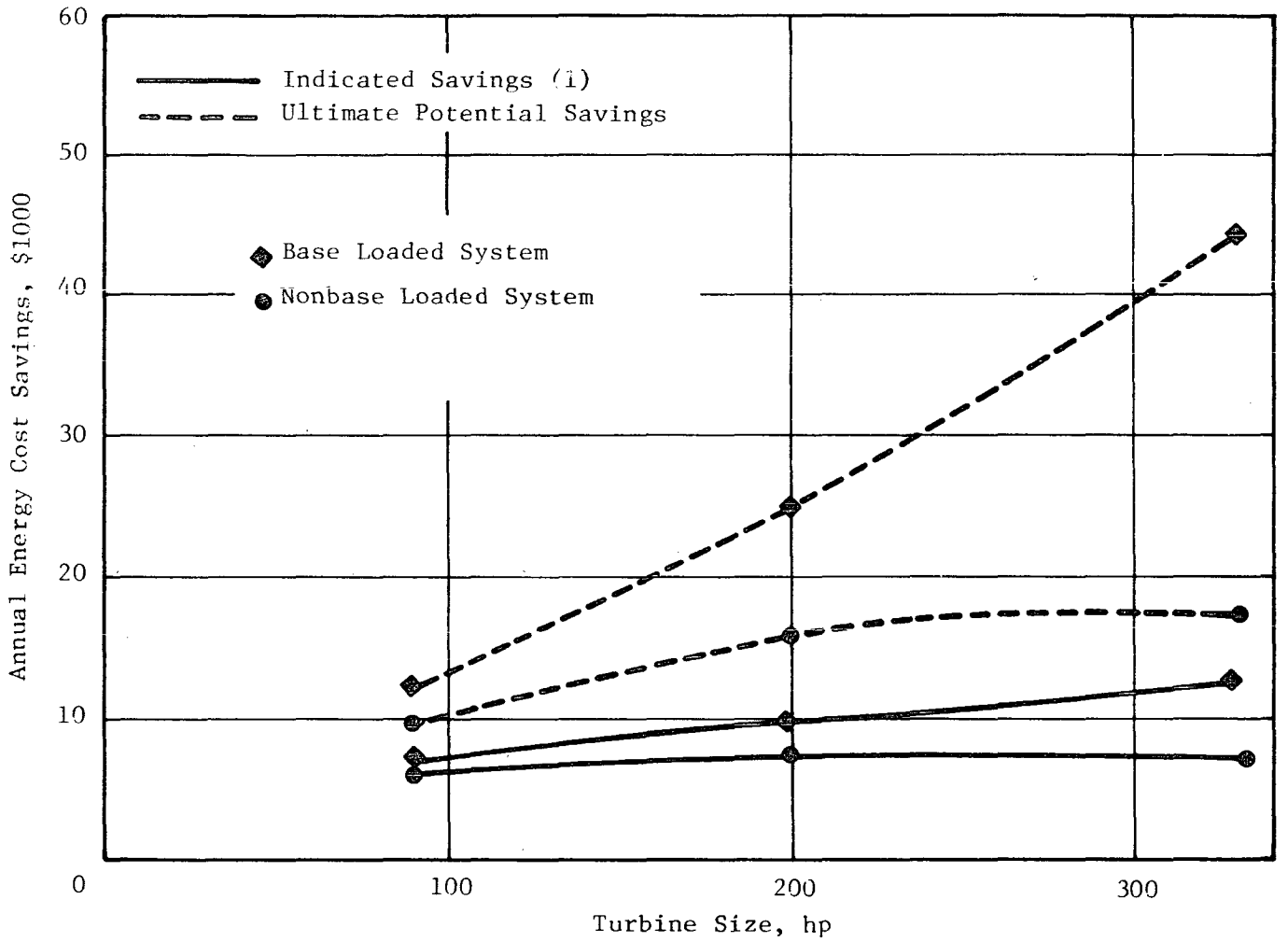

(1) From Fleishman "B"
Building HVAC Loads

Fig. 2.2-19 Annual Energy Cost Savings Showing Actual Indicated Savings and Potential Savings

792265

2.3 Additional System/Modeling Analysis

Subsequent to the October Program Advisory Board Meeting, an additional modeling and system analysis was done to further improve overall system performance. Although at that time the system showed energy cost savings when compared to conventional systems, it did not show a savings in source energy consumption. Several steps were taken to reduce the energy consumption until the system also showed a savings. This process was acomplished by expanding the model; in particular the refrigeration and power cycle heat exchangers. Then a precise trade-off analysis could have been made with respect to energy cost, equipment cost and energy consumption. The three changes conserving the most energy included: a) eliminating all heat pumping; b) reducing the water delivery temperature from the 115-180°F schedule to a constant 110°F; and c) improving the steam turbine performance. The details of the additional modeling is described in the subsections which follow.

2.3.1 Heat Exchanger Modeling

2.3.1.1 Refrigerant Evaporator and Condenser Temperatures. The relationship between the refrigerant temperature (T_{REF}) on the shell side and the water temperature on the tube side was derived from the basic heat exchanger equation:

$$Q = UA\ LMTD = WC_p\ \Delta T \qquad (1)$$

where

Q = heat transferred between refrigerant and water, Btu/hr

U = overall heat transfer coefficient Btu/hr ft^2°F

A = heat transfer area, ft^2

$LMTD$ = log-mean temperature difference = $\dfrac{T_2 - T_1}{Ln\left[\dfrac{T_{REF} - T_1}{T_{REF} - T_2}\right]}$

W = water flow rate, lb/hr

C_p = specific heat at constant pressure of water Btu/lb-F°

ΔT = change in water temperature between entrance and exit of heat exchanger, $T_2 - T_1$

Solving for the refrigerant temperatures in Equation (1) yielded the following relationships in terms of the variables defined in Figure 2.3-1.

For the evaporator:

$$T_{14} = t_{12} - \frac{Q_{14}}{W_1 \cdot C_p} \left[\frac{1}{1 - e^{X_{14}}} - 1 \right] \tag{2}$$

where:

$$X_{14} = - \frac{U_{14} \cdot A_{14}}{W_1 \cdot C_p}$$

For the condenser:

$$T_{34} = t_{81} + \frac{Q_{34}}{W_8 \cdot C_p} \left[\frac{1}{1 - e^{X_{84}}} \right] \tag{3}$$

where:

$$X_{84} = - \frac{U_{84} \cdot A_{84}}{W_8 \cdot C_p}$$

2.3.1.2 Steam Temperature of Double-Bundle Steam Condenser. The double-bundle steam condenser, shown in Figure 2.3-1, contained coils carrying water to and from the heating system as well as coils carrying cooling water to and from the cooling tower. The temperature of the saturated steam-water mixture (T_{33}) was determined by the temperature and flow requirements of the heating load coil (if there was a heating load), such that

$$T_{33} = t_{71} + \frac{Q}{W_7 \cdot C_p} \left[\frac{1}{1 - e^{X_{73}}} \right] \tag{4}$$

where:

$$X_{73} = - \frac{U_{73} \cdot A_{73}}{W_7 \cdot C_p}$$

$$t_{71} = t_{73} - \frac{Q_7}{W_7 \cdot C_p} ,$$

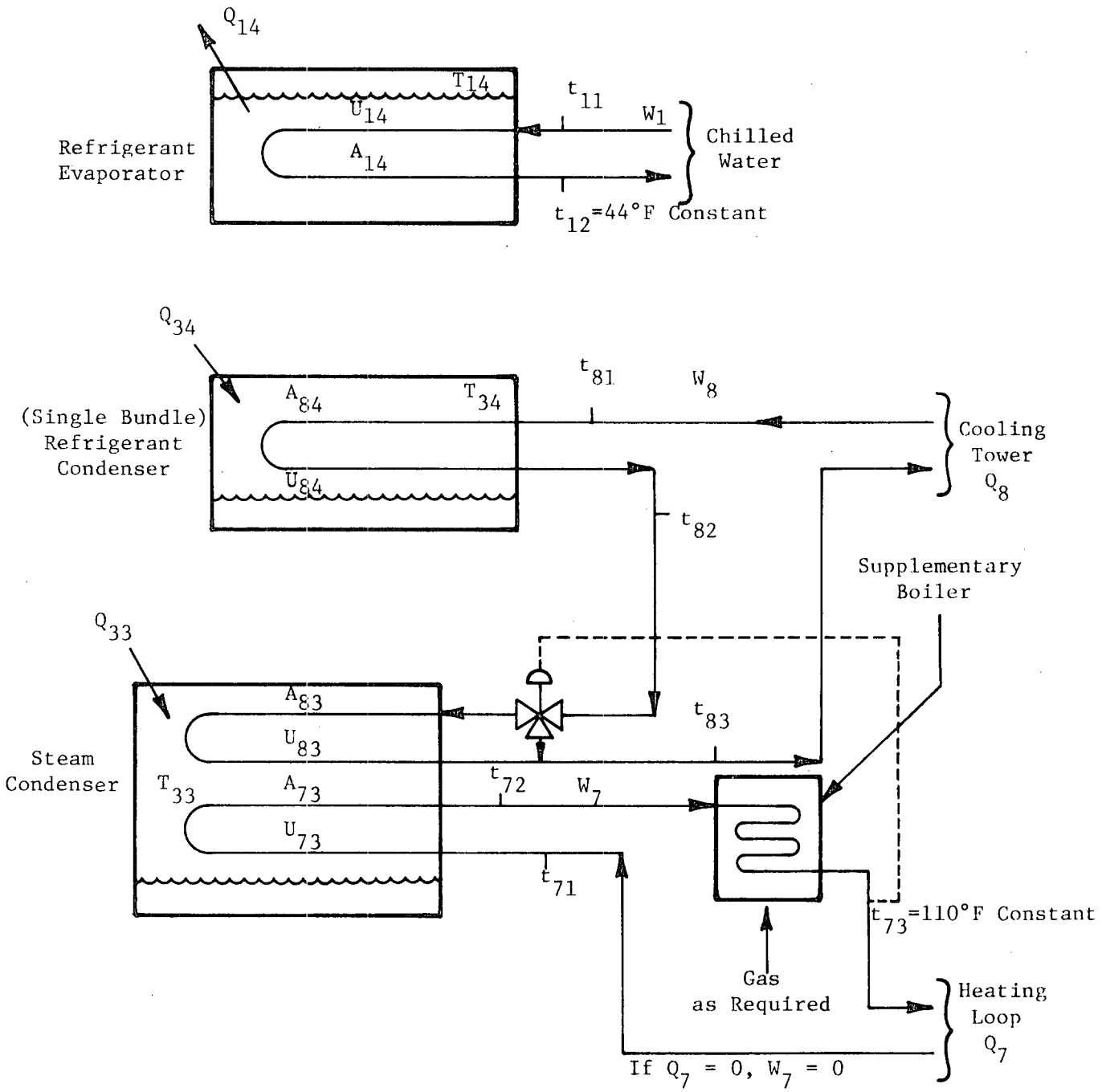

T - Saturated Vapor Temperature, °F
t - Water Temperature, °F
A - Surface Area, ft^2
U - Overall Heat Transfer Coefficient, Btu/hr ft^2°F
W - Water Flow, lb/hr
Q - Heat Load, Btu/hr

Fig. 2.3-1 Schematic of Heat Exchanger Flows and Definition of Terms

and where Q was either the building heating load (Q_7) or the rejected Rankine cycle heat (Q_{33}) whichever was lower. Any excess rejected heat was then carried away by means of the coil leading to the cooling tower.

If no heating load existed, the rejected heat from the base-loaded Rankine cycle was transferred to the cooling tower; in this case the condenser temperature became

$$T_{33} = t_{82} + \frac{Q_{33}}{W_8 \cdot C_p} \left[\frac{1}{1 - e^{X_{83}}} \right] \tag{5}$$

where:

$$X_{83} = - \frac{U_{83} \cdot A_{83}}{W_8 \cdot C_p}$$

$$t_{82} = t_{81} + Q_{34}/W_8 \cdot C_p$$

$$t_{81} = f \text{ (ambient wet bulb temperature, cooling tower performance)}$$

2.3.1.3 Heat Exchanger Heat Transfer Coefficient and Area Determination. The product UA represents heat exchanger heat transfer coefficient (U) and area (A) determination. This product in the above equations was determined for heat exchanger design loads and expected heat exchanger temperatures at typical tube-flow rates and at given tube inlet-outlet temperature conditions.

The heat exchanger areas and heat transfer coefficients were supplied by CON-RAD (Tulsa, Oklahoma), a heat exchanger supplier. These areas were considered as first estimates, subject to optimization in the analysis to be described later.

2.3.1.4 Single- Versus Double-Bundle Refrigerant Condenser. In choosing between a single- versus a double-bundle refrigerant condenser, a single-coil refrigerant condenser, having the tube-side connected to the cooling tower, was the preferred configuration. Because all but 65 x 10^6 Btu/yr (~$175/yr) of the heating load could be satisfied from the reject heat of a base-loaded steam-Rankine cycle, the added complexity and resultant expense of the second

refrigerant condenser bundle (approximately $7,000) could not be justified. Any additional heat could be more economically provided by an auxiliary gas steam generator as shown in Figure 2.3-1.

Eliminating the second refrigerant bundle also improved the performance of the refrigeration system, particularly in the mid temperature range (55-65°F) where the economizer became ineffective and the evaporator loads became significant. With a single bundle, the condenser temperature was controlled by the cooling tower return water temperature (65-75°F), whereas with the double-bundle heat pump the condenser temperature was controlled by the heating system return water temperature (100-105°F). Thus, with the single-bundle condenser, less compressor work was required to remove the same amount of heat from the evaporator.

2.3.1.5 Heat Exchanger Flow Chart. A detailed flow chart in Attachment A, Chart 2 shows the logic used in calculating heat exchanger loads and temperatures.

2.3.2 Refrigerant Cycle Modeling

2.3.2.1 Coefficient of Performance Calculation. In the refrigerant cycle shown in Figure 2.3-2, the coefficient of performance (COP), defined as

$$COP = \frac{\text{heat in}}{\text{network supplied}},$$

yielded

$$COP = \frac{h_1 - h_4}{h_2' - h_1} \tag{6}$$

Once the evaporator temperature (T_{14}) and condenser temperature (T_{34}) were known, the COP was determined by specifying the refrigerant (yields h_1 and h_4, as well as P_{14} and P_{34}) and by using the compressor efficiency (from the compressor performance chart, Figure 2.3-3) to calculate the nonisentropic enthalpy change $h_2' - h_1$. The condenser temperature (T_{34}), used in the COP calculation, also depended on the condenser heat load which, in turn, depended on the COP. Therefore, after an initial assumption of a COP value, several

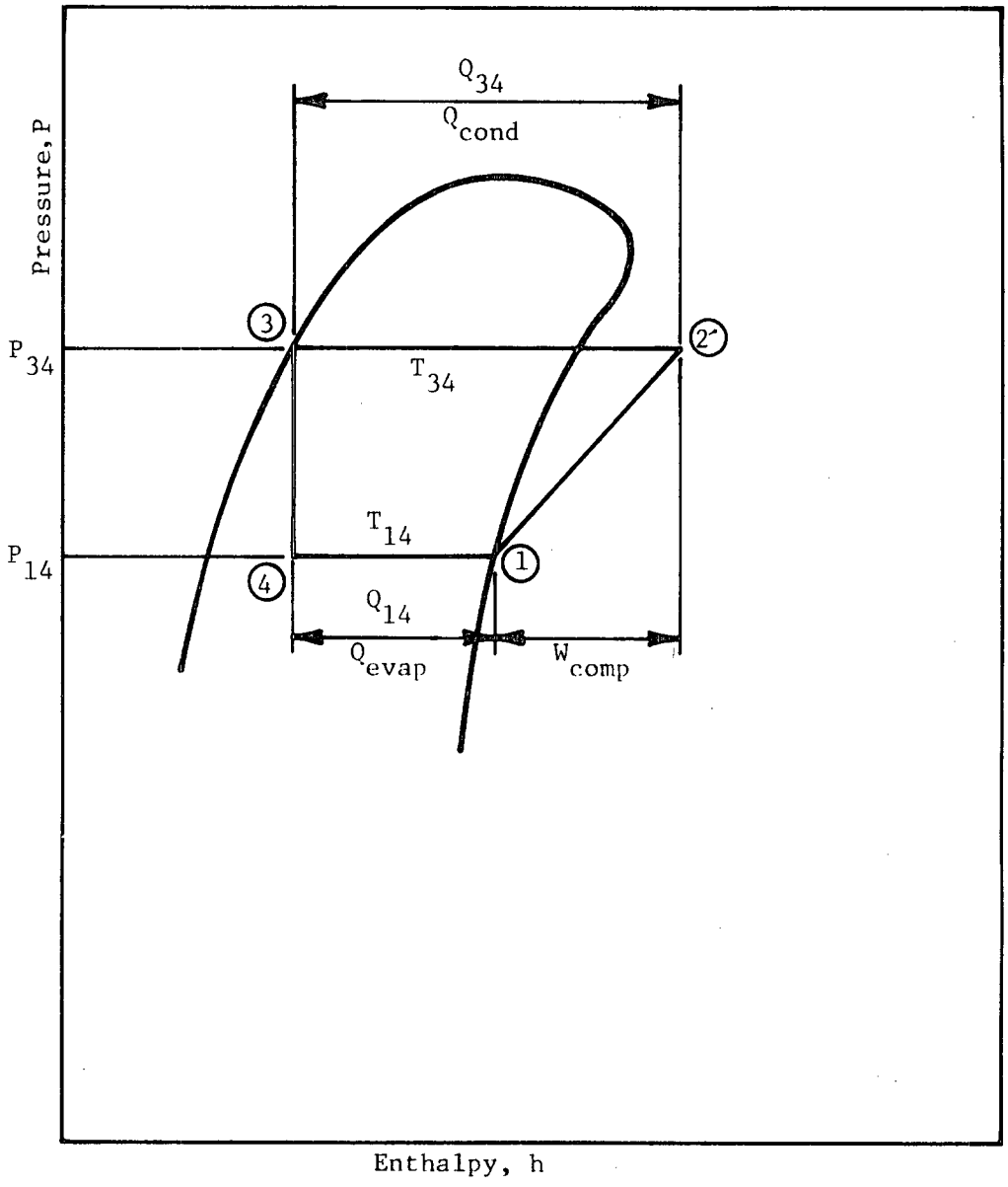

Fig. 2.3-2 Refrigerant Pressure Enthalpy Diagram Showing Refrigerant Cycle State Points

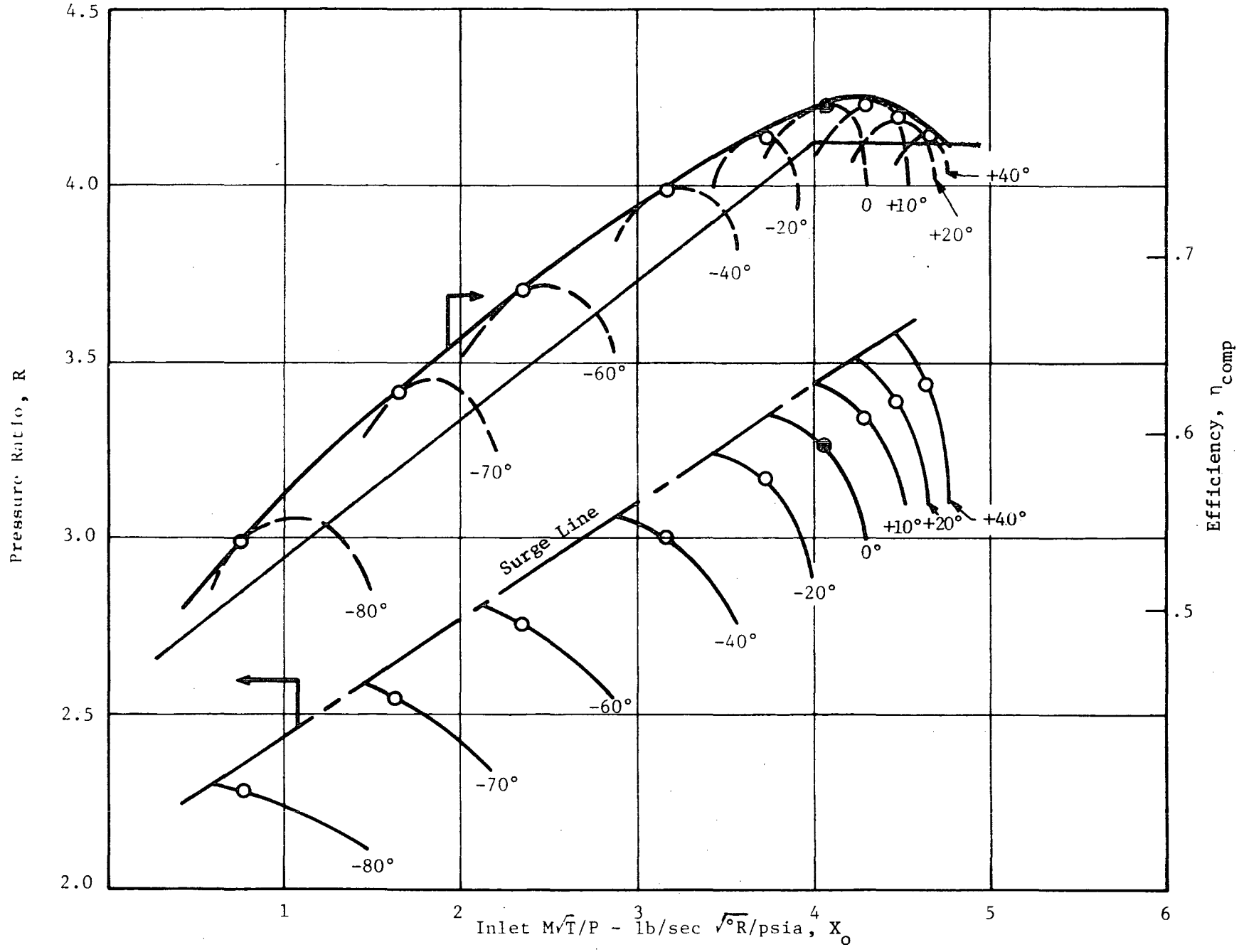

Fig. 2.3-3 CNG Compressor Performance R-12 Refrigerant

MECHANICAL TECHNOLOGY INCORPORATED

792300

iterations were necessary for the COP to converge to its final value. (See flow chart for COP calculation in Attachment A, Chart 3.)

2.3.2.2 Compressor Efficiency. The operational point for a centrifugal compressor, using refrigerant R-12, was obtained for a given pressure ratio (R) and a given compressor inlet condition $X_o = \frac{W_{REF}\sqrt{T_{14}}}{P_{14}}$, see Figure 2.3-3. This point was then compared to the linear surge line shown in Figure 2.3-3; if in surge, the mass flow was increased so as to go out of surge with the single-bundle condenser design. However, all the heating-cooling load combinations investigated led to out-of-surge conditions without the need to increase mass flow.

Referring again to Figure 2.3-3, the (X_o, R) point was then moved vertically upward to the same inlet guide vane (IGV) position in the (X_o, η_{comp}) graph as in the (X_o, R) graph. For modeling purposes, however, a combination of two straight lines (as shown) was used to approximate these latter points, so that the efficiency could be easily calculated from equations for a straight line (see flow chart for compressor efficiency determination in Attachment A, Chart 4).

2.3.2.3 Refrigerant Options. The type of refrigerant used was determined by the rotational speed of the centrifugal compressor. Three compressors, each with a different speed, were considered with the corresponding refrigerants as follows:

Compressor Speed (rpm)	Freon Refrigerant
12,000	R-11
24,000	R-12
40,000	R-22

Equations for the saturation properties as a function of temperature were used with the system's computer model.

In order to calculate the isentropic enthalpy change of the compressor, a linear constant-entropy slope in the superheated vapor region of a semi-log

P-h Mollier chart was determined for each refrigerant. As a result, the enthalpy change at constant entropy could be approximated as a function of the pressure ratio as follows:

$$h_2 - h_1 = (\text{slope}) \times (\log \frac{P_{34}}{P_{14}}), \qquad (7)$$

where:

Refrigerant	Slope
R-11	16.9
R-12	17.5
R-22	24.6

2.3.3 Prime Mover Concept Modeling

2.3.3.1 Mechanical Coupling Model (Base-Loaded Turbine). A typical mechanical coupling concept is shown in Figure 2.3-4. This coupling consisted of a base-loaded 90-hp turbine connected to a gearbox. Power was transmitted through the gears either to a 150-hp centrifugal compressor or to the generator, depending on the power needs of the compressor. If the turbine did not meet the power requirements of the compressor, the generator acted as a motor, thereby drawing power from the utility grid. The corresponding computer model for the mechanical coupling concept is shown in Figure 2.3-5. The goal of the model was to calculate the amount of power which the utility grid had to provide to the system or what excess generating capacity the system had to offset purchased electricity. Not shown in the flow chart is the necessity of hand-calculating the compressor power (and the corresponding turbine or utility power) needed to drive the compressor when unloaded but still rotating.

2.3.3.2 Electrical Coupling Model (Base-Loaded Turbine). The primary purpose of the electrical coupling model concept was to allow decoupling of an unloaded compressor, thereby saving the idling power requirements of the mechanical concept. Figure 2.3-6 shows that the generator and motor were separate; the generator converted the 90-hp base-loaded turbine's mechanical power to electrical power which could have been used to help drive the 150-hp centrifugal compressor motor. Excess power from the system or supplemental

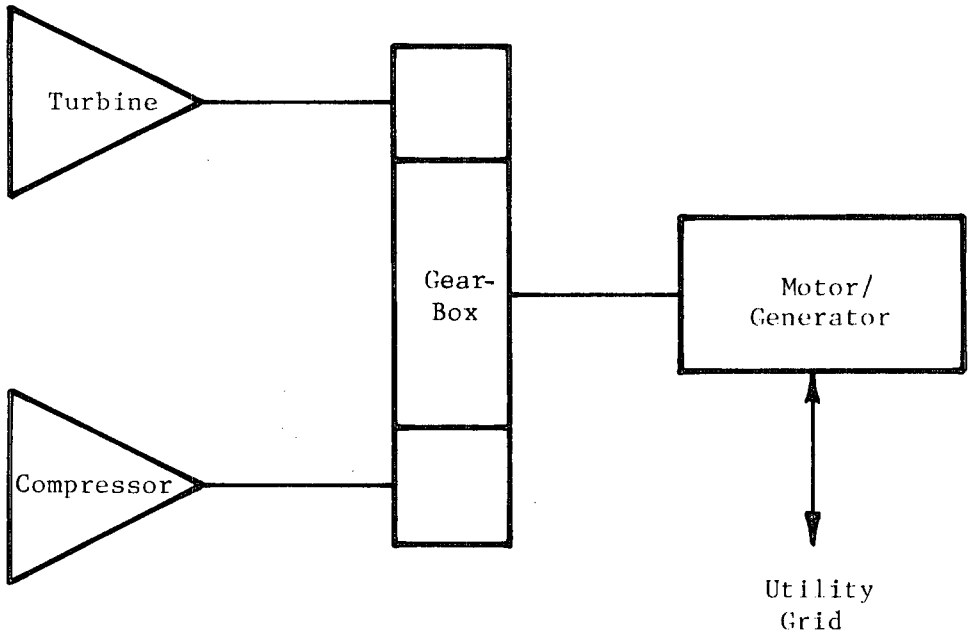

Fig. 2.3-4 Hardware Schematic of Typical Mechanical Coupling Concept

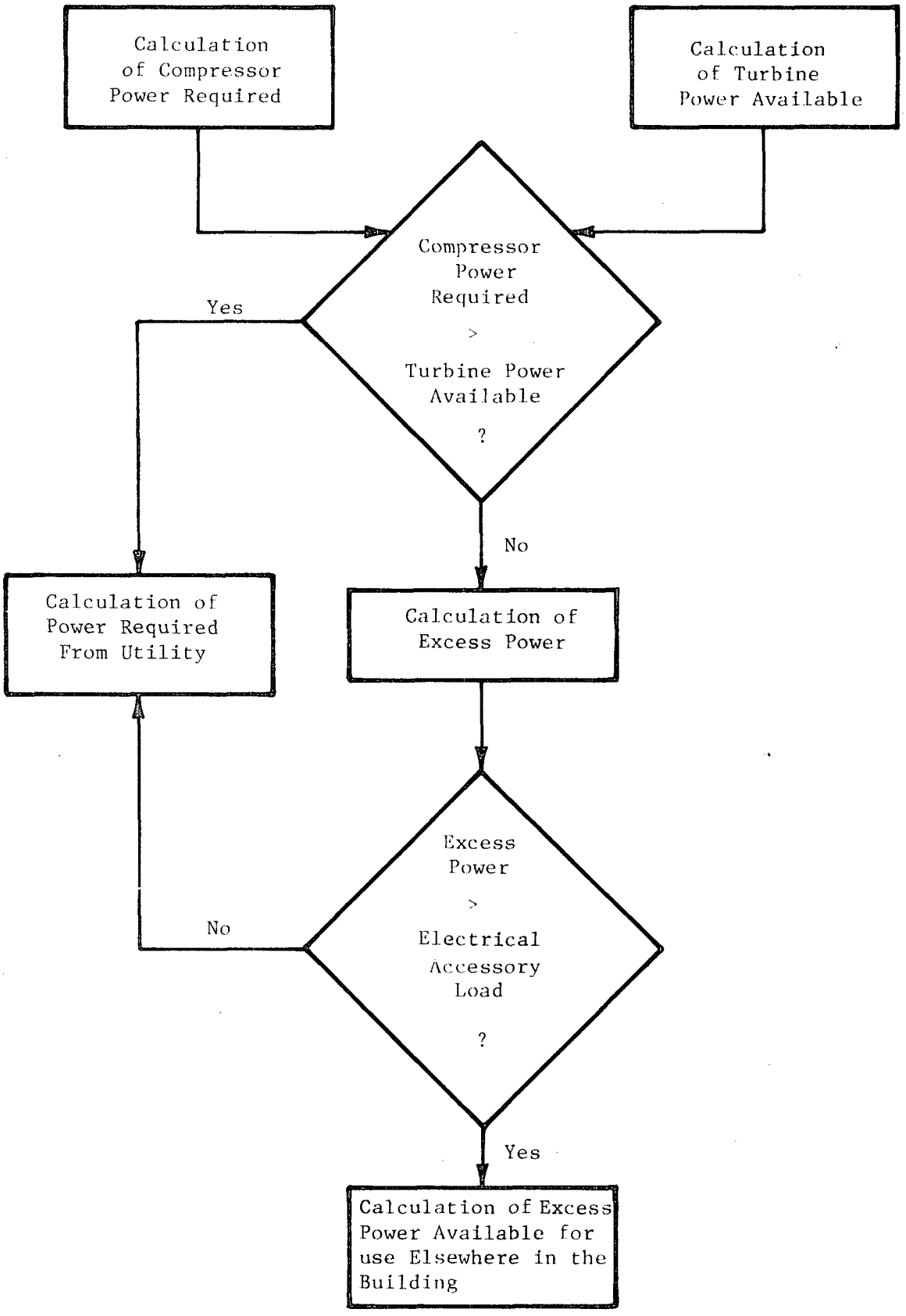

Fig. 2.3-5 Flow Chart for Typical Coupling Concept

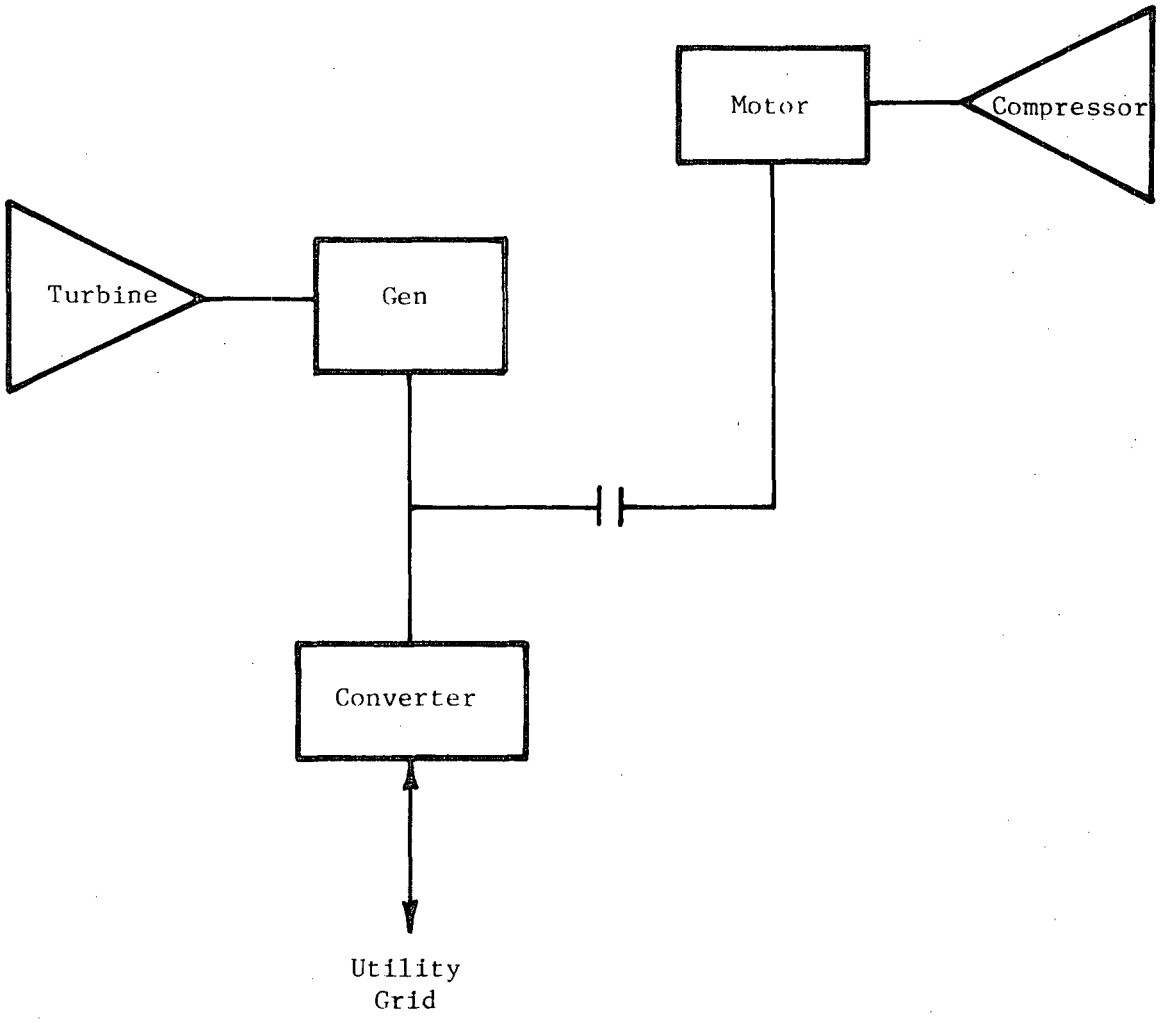

Fig. 2.3-6 Hardware Schematic of Typical Electrical Coupling Concept

power required from the utility grid for the system was converted to the appropriate frequency through the electrical converter. The corresponding flow chart for this concept was the same as for the mechanical coupling concept (Figure 2.3-5).

2.3.3.3 Nonbase-Loaded Turbine Concept (Electrical Coupling). The nonbase-loaded turbine concept used all of the steam condenser's reject heat to satisfy the heating load. By operating the turbine only when a heating load existed, none of the steam condenser heat load was wasted. The modeling flow chart is presented in Attachment A, Chart 6.

As a result, the compressor received considerably less power from the non-base-loaded turbine; this lost power then had to be imported from the utility grid. However, the turbine operated at its rated base-loaded power (90 hp) during the winter months when heating loads were greater than those provided by the steam condenser.

2.3.4 System Optimization for Office Building Application

2.3.4.1 Optimization Procedure. The purpose of the system optimization was to randomly vary selected input parameters and thereby determine the lowest combination of annual system operating cost and heat exchanger capital cost. This objective was subject to the constraint that any increase in capital cost would need to be recovered in operating cost savings in two years or less.

Of all independent system input parameters, five were chosen to be varied because of their relatively high influence on the dependent system output parameters (i.e., annual system operating cost and system capital cost). These five parameters also had a relatively high degree of flexibility within the selected system design. Four heat exchanger areas were chosen (one refrigerant evaporator, one refrigerant condenser, and two steam condensers) in addition to the heating system flow rate. Each of the four heat exchanger areas to be optimized was given a possible range of values based on the available cost data of heat exchanger capital cost versus square feet of heat exchanger area; the heating system flow rate range was approximated based on good design practice. The resulting ranges were as follows:

Refrigerant evaporator area (A14). . . . . .500-900 ft^2

Refrigerant condenser area (A84) . . . . . .700-1400 ft^2

Steam condenser area for heating system (A73). . . . . .60-400 ft^2

Steam condenser for cooling tower system (A83) . . . . .60-400 ft^2

Heating system flow rate (G7). . . . . .150-250 gpm

Heat exchanger capital costs, as a function of heat exchanger tube surface area, were approximated by a straight line, determined from cost quotes supplied by a reliable heat exchanger manufacturer (CON-RAD). The single-unit quotes were reduced by 15% (based on quantity production) and resulted in the following linear functions (with areas in square feet):

$$\$ = 13.6\ (A14 - 618) + 9658 \tag{8}$$

$$\$ = 11.6\ (A84 - 878) + 11{,}343 \tag{9}$$

$$\$ = 4.24\ (A73 + A83 - 114) + 7620 \tag{10}$$

Combining Equations (8), (9), and (10) yielded the total heat exchanger capital cost

$$\text{Total } \$ = 13.6\ A14 + 11.6\ A84 + 4.24\ (A73 + A83) + 9548 \tag{11}$$

As stated previously, the purpose of the optimization was to achieve the lowest combination of annual system operating cost (electricity and gas) and heat exchanger capital cost for a 2-year pay back. Numerically, this can be expressed as follows:

$$2 \times (\text{annual operating cost}) + \text{total heat exchanger capital cost} = \text{minimum} \tag{12}$$

The independent input parameters were then varied randomly and the result from each combination was checked against Equation (12).

2.3.4.2 Optimization Method. A complex method for constrained optimization (Box's algorithm) was integrated into the system program according to the procedure described above. The program found the minimum of multivariable, nonlinear functions subject to constraints. No derivatives were required. The

procedure found the global minimum, because the initial set of points was randomly scattered throughout the feasible range of the independent parameter values. Once the results of an initial random set of combinations (~7) were known, new sets of combinations were then chosen based on that random combination giving the best minimum. Iterations continued until one of the following three criteria ended the search for the minimum:

- Specified computer time limit exceeded
- Specified total number of iterations exceeded
- Specified convergence criterion satisfied

A description of Box's algorithm and its FORTRAN program are presented in Attachment B.

2.3.4.3 Optimization Results. Two runs, of approximately 20 iterations each, produced a minimum "system cost" within a specified convergence criterion. The results, which are given in Table 2.3-1, were based on using (a) one particular building load model supplied by CNG (see Attachment E) with (b) one particular prime mover electrical coupling concept (Concept VIII - see section 2.3.5).

2.3.5 Trade-Off Study on Prime Mover Coupling Concepts

2.3.5.1 Candidate Concepts. Nine different configurations, coupling the turbine, the compressor, the generator, and the motor, were modeled and the resulting annual system operating costs compared. In one of the configurations it was assumed that all the power to drive the compressor was supplied by the utility (i.e., no turbine). Four of the configurations involved mechanical coupling by means of a gearbox. The remaining four concepts contained electrical coupling which allowed for decoupling the compressor from the system by shutting off its electric motor. Each of the configurations is shown in Figures 2.3-7 through 2.3-11, along with the efficiencies and total parasitic losses which consist of bearing losses, windage and friction losses, and lubrication pump and boiler feed pump losses. All concepts were modeled with the flow chart for coupling concepts shown in Attachment A, Chart 5.

TABLE 2.3-1

RESULTS OF OPTIMIZING SYSTEM

	ANNUAL[1] OPERATING COSTS	HEAT EXCHANGE CAPITAL COSTS	ENERGY USAGE 10^9 BTU/YR	EXCHANGER AREAS, FT^2 REFRIGERANT EVAP	REFRIGERANT COND	STEAM COND H.S.	STEAM COND C.T.
Base Case	$21,304	$29,420	6.97	600	900	150	150
Optimized Case	22,034	26,685	7.07	577	709	153	99
Δ	+ 730	- 2,735	+0.10	-23	-191	+3	-51
$\frac{\Delta \times 100}{\text{Base}}$	+ 3.4%	- 9.3%	+1.4%				

(1) $2.20/$10^6$ Btu Gas, 4¢/kW hr, $3,000/kW Demand, $\frac{Q_c}{Q_H} = 1.5$

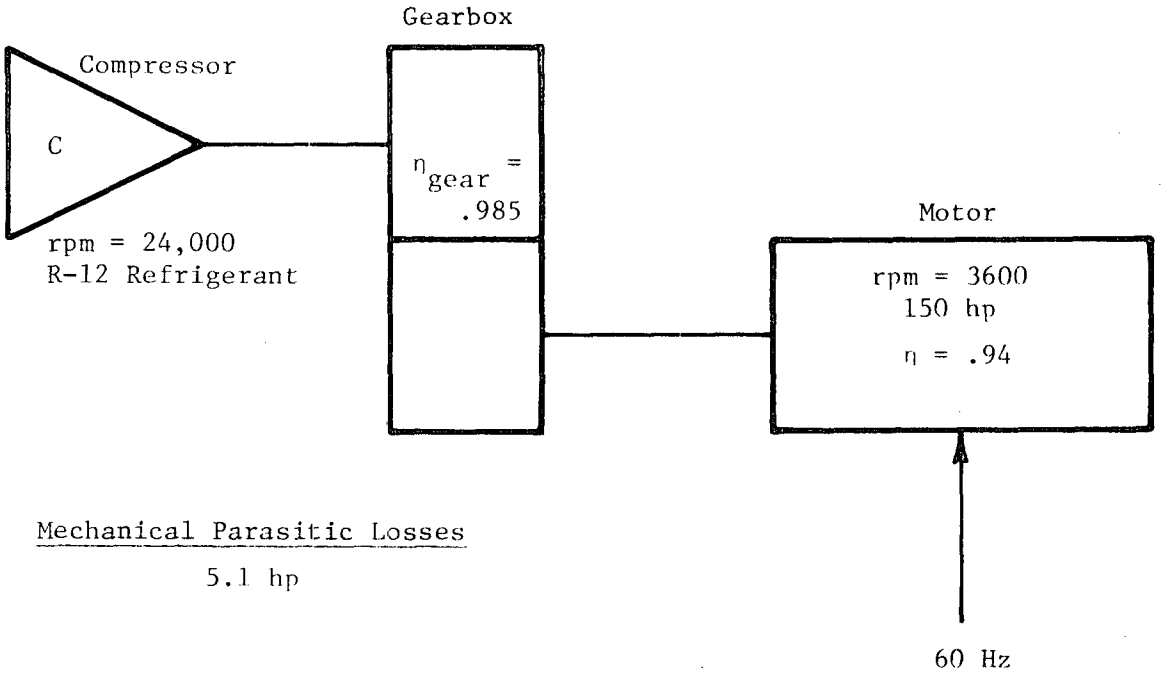

Fig. 2.3-7 Concept I - No Turbine, Conventional Electric Driven Chiller

MECHANICAL TECHNOLOGY INCORPORATED

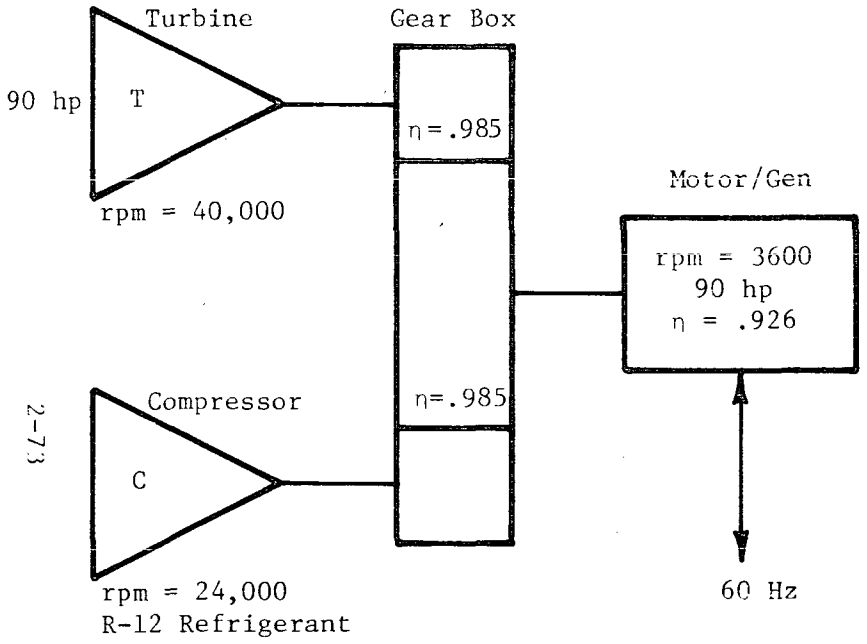

Concept II

Mechanical Parasitic Losses = 20.0 hp

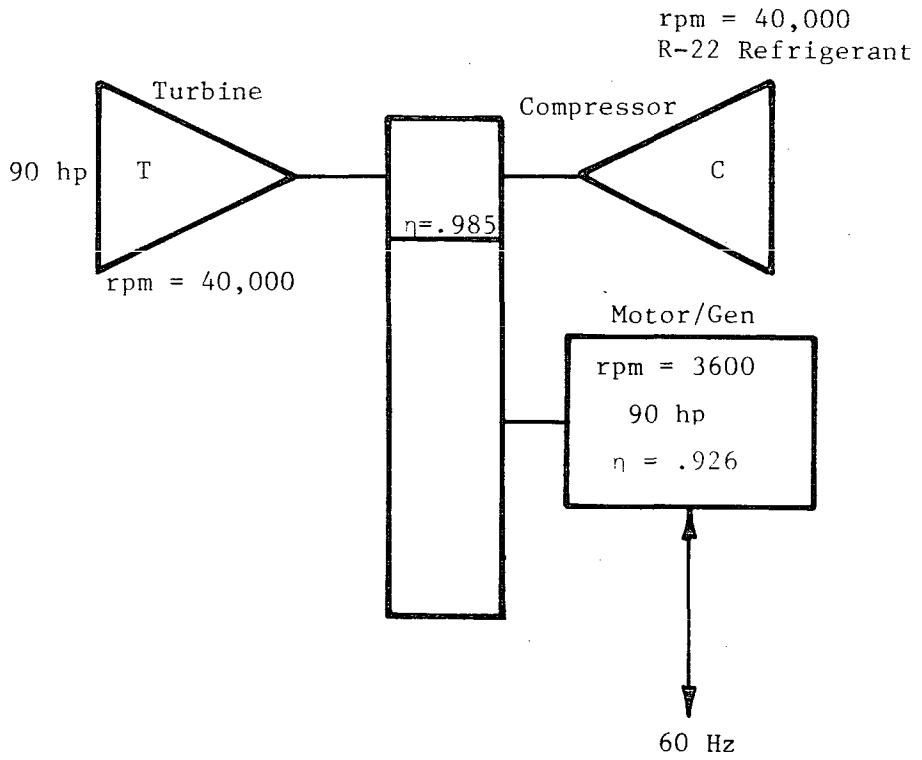

Concept III

Mechanical Parasitic Losses = 15.8 hp

Fig. 2.3-8 Mechanical Coupling Concepts II and III

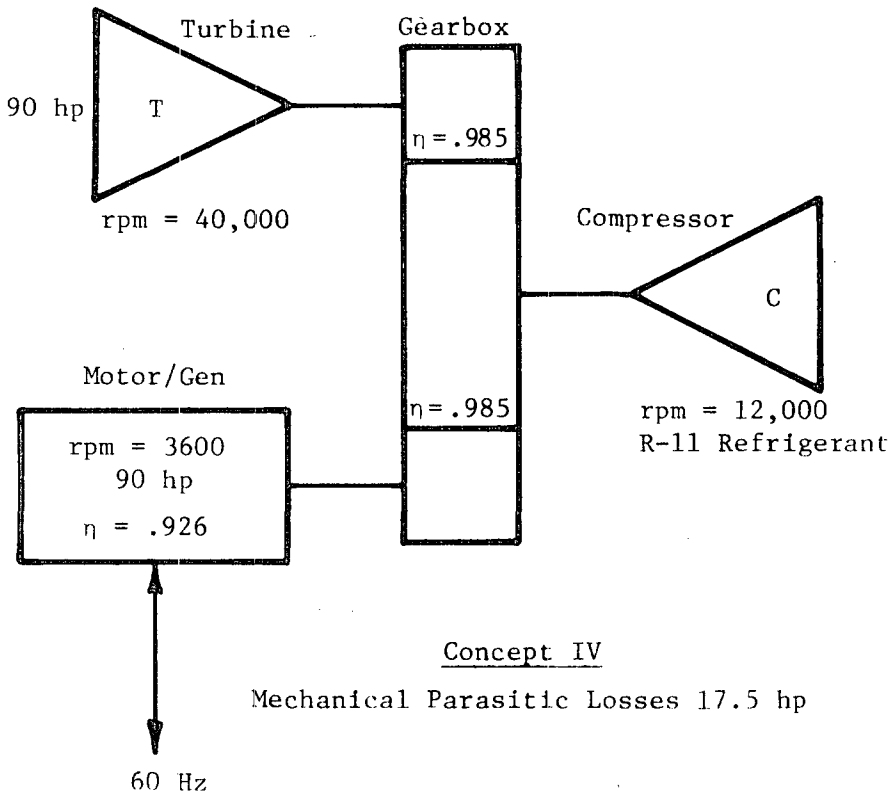

Concept IV

Mechanical Parasitic Losses 17.5 hp

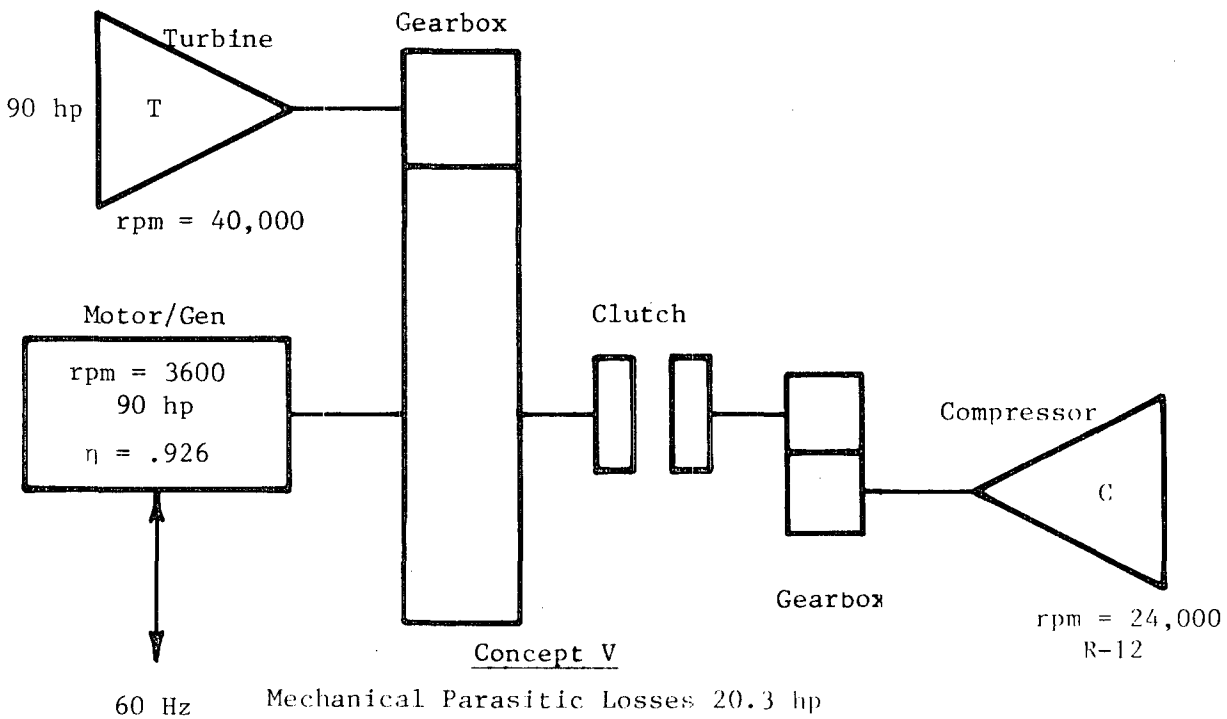

Concept V

Mechanical Parasitic Losses 20.3 hp

Fig. 2.3-9 Mechanical Coupling Concepts IV and V

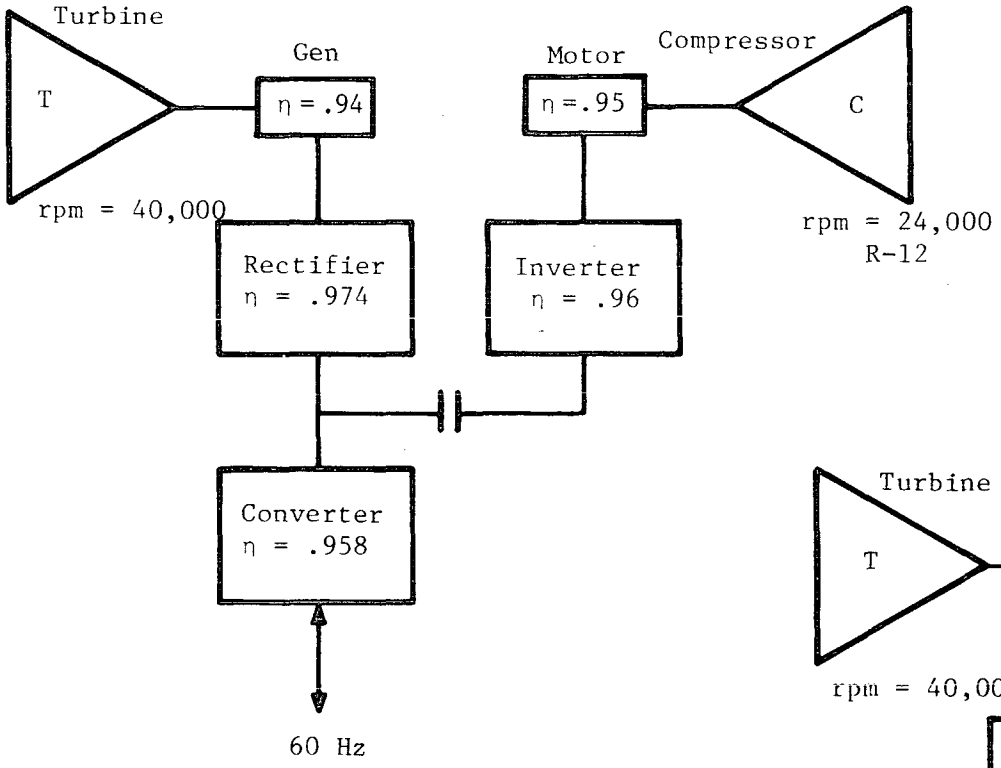

Concept VI

Mechanical Parasitic Losses = 7.2 hp

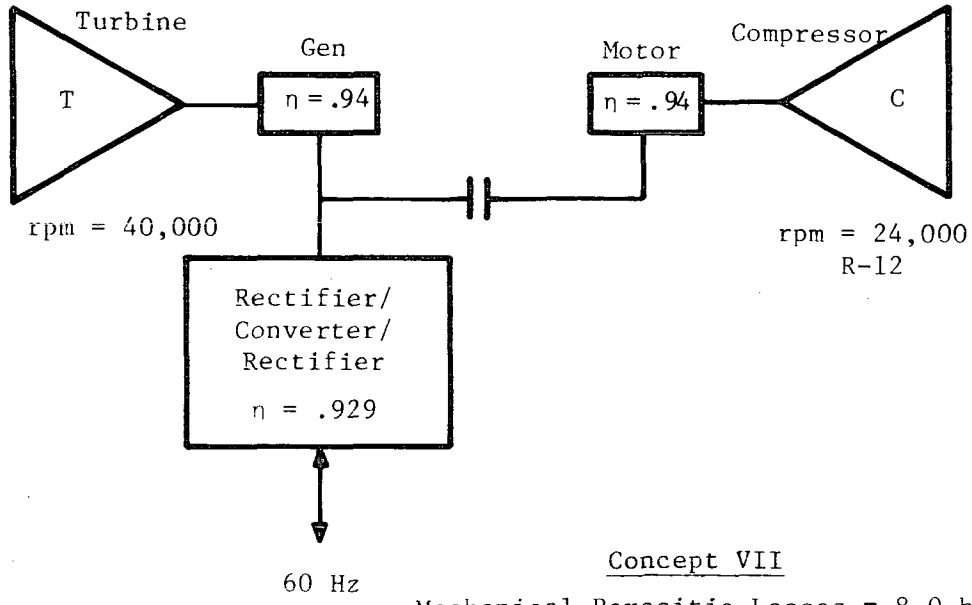

Concept VII

Mechanical Parasitic Losses = 8.0 hp

Fig. 2.3-10 Electrical Coupling Concepts VI and VII

792486

MECHANICAL TECHNOLOGY INCORPORATED

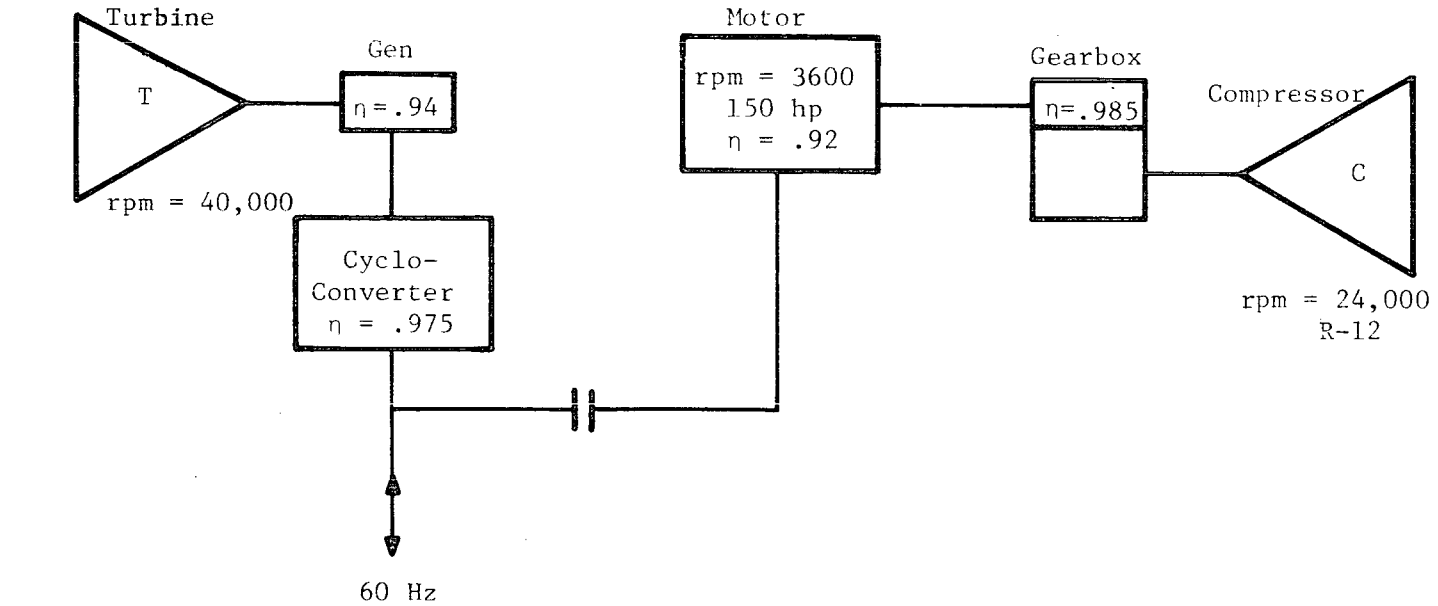

Concept VIII

Mechanical Parasitic Losses = 9.0

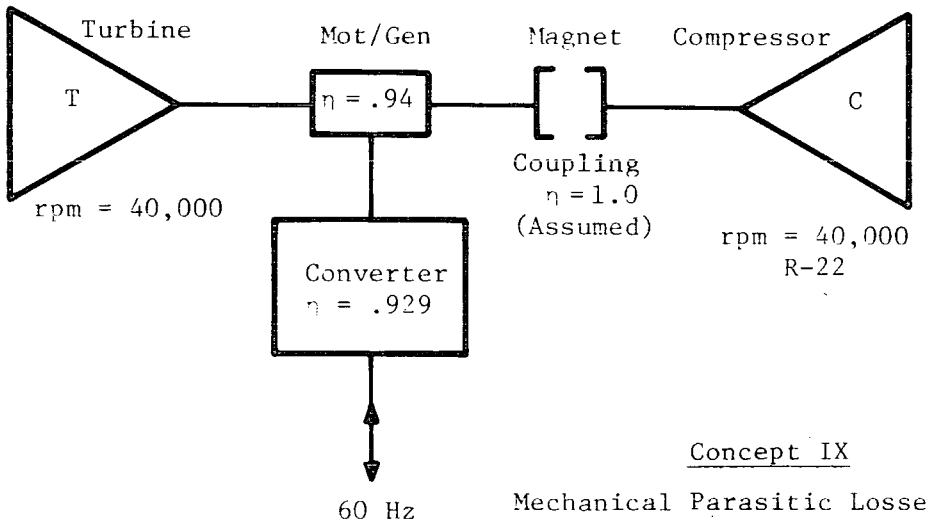

Concept IX

Mechanical Parasitic Losses = 6.0

Fig. 2.3-11 Electrical Coupling Concepts VIII and IX

792485

MECHANICAL TECHNOLOGY INCORPORATED

2.3.5.2 Annual System Operating Cost Comparison. Each model for the nine coupling concepts was evaluated for annual operating costs. The results are listed in Table 2.3-2. Identical system inputs, including the optimized heat exchanger areas were used. For mechanical concepts II, III, and IV, the cost of operating an idling compressor using 18 hp in the heating season is also displayed. The nonbase-loaded turbine concept was evaluated using the Concept VIII coupling model and is included for comparison. With the nonbase-loaded turbine concept, just enough steam condenser heat was generated to meet the heating load requirements.

Table 2.3-2 shows definite trends. Base-loaded electrical concepts gave the best annual operating cost over base-loaded mechanical concepts as well as over part-loaded electrical concepts. In addition, operating with a mechanical clutch clearly improved a mechanical concept's annual operating cost.

2.3.6 Alternate Driver Study

An assumption was made in previous sections of this report to consider only the steam-Rankine cycle system prime mover. The alternate driver study compared the annual operating cost and energy consumption of three alternate driver models with the steam-Rankine driver. Specifically, annual heating and cooling loads for an economy motel were applied to four different system models (for both part-loaded and base-loaded driver operation) in order to determine the best driver configuration (with its corresponding operational mode). Table 2.3-3 lists the specific types of drivers considered.

2.3.6.1 Differences in Alternate Drivers. One system model program was used in the comparison of all alternate drivers. By specifying the type of alternate driver as an input parameter, corresponding algorithms for a particular driver were activated.

The system model differentiated between the alternate driver types only in the calculations of the driver thermal efficiency (see Figure 2.3-12) and in the amount of reject engine heat available for satisfying the heating load (see Figure 2.3-13). All other input parameters were identical except for the gas energy input to each heat engine in the base-loaded operation. This value

TABLE 2.3-2

ANNUAL OPERATING COST COMPARISON OF PRIME MOVER COUPLING CONCEPTS

	CONCEPT		TOTAL ANNUAL OPERATING COST ($)*
	I	(No Turbine)	31,472
BASE-LOADED TURBINE	MECH. II	(No Clutch) 24,375 + 3500** =	27,875
	III	(No Clutch) 23,198 + 3607** =	26,805
	IV	(No Clutch) 25,214 + 3032** =	28,246
	V	(With Clutch)	24,106
	ELEC. VI		22,741
	VII		22,463
	VIII		22,034
	IX	(Mag. Clutch)	22,875
NON-BASE LOADED TURBINE (WITH CONCEPT VIII)			26,249

* @ $\$2.20/10^6$ Btu
@ $ .04/kW-hr
@ $3.00/Mo/Peak Annual kW Demand

** Cost of idling compressor

Office Building Application Data

Gross Annual Cooling Requirement	$= 2.8 \times 10^9$ Btu
Net Annual Cooling Requirement (If economizer is used)	$= 1.8 \times 10^9$ Btu
Gross Annual Heating Requirement	$= 1.8 \times 10^9$ Btu
Peak Cooling Load	$= 1.5 \times 10^6$ Btu/hr
Peak Heating Load	$= 1.3 \times 10^6$ Btu/hr

TABLE 2.3-3

ALTERNATE DRIVERS FOR SYSTEM MODEL

Model Input Type	Alternate Driver
1	Stirling Engine (advanced)
11	Stirling Engine (state-of-art)
2	Diesel Engine (state-of-art) or Pilot-ignited Gas Engine
3	Spark-Ignited Gas Engine (state-of-art)
4	Steam-Rankine Turbine

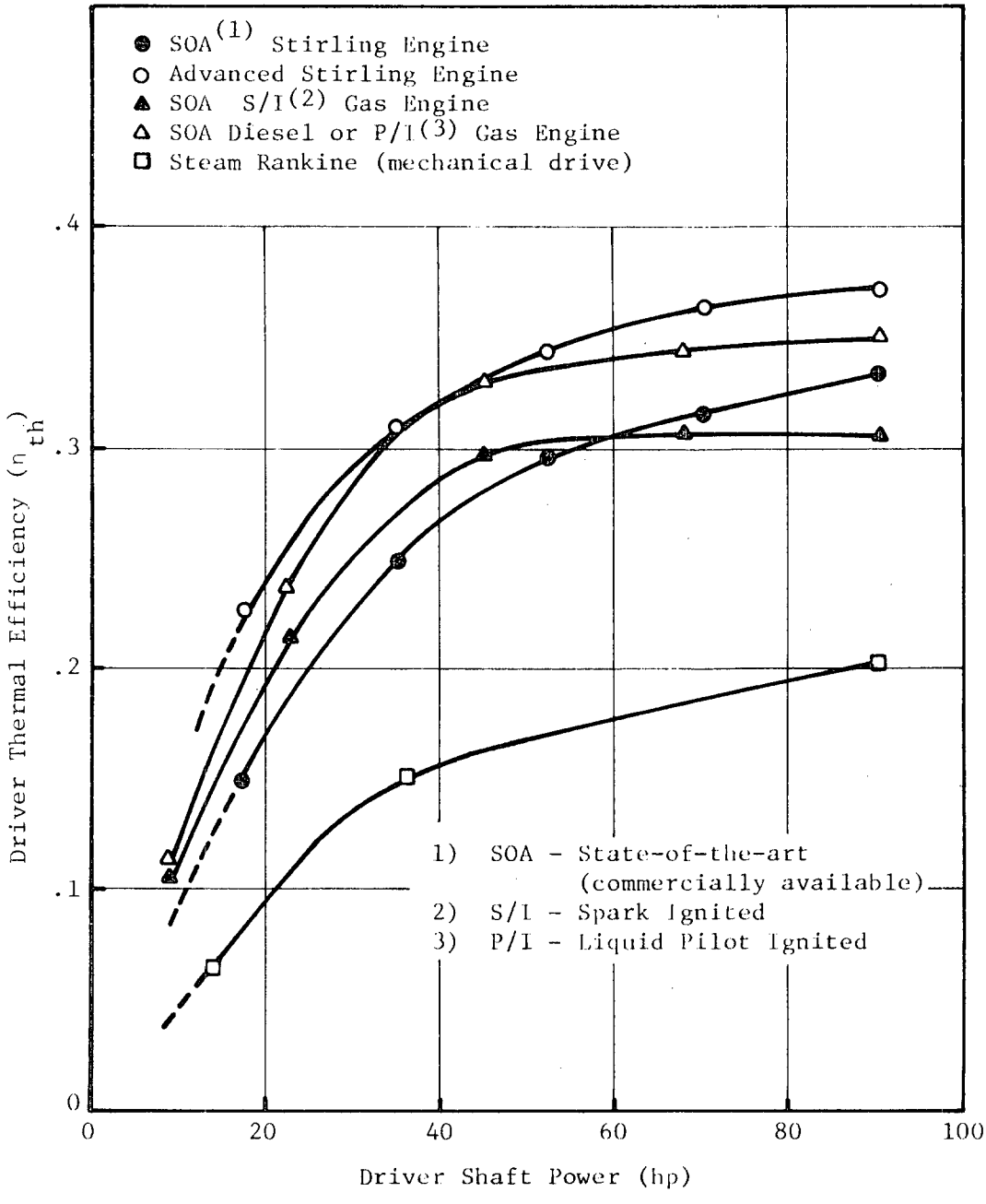

Fig. 2.3-12 Thermal Efficiency Comparison of Alternate Drivers (including all required power for accessories)

792730

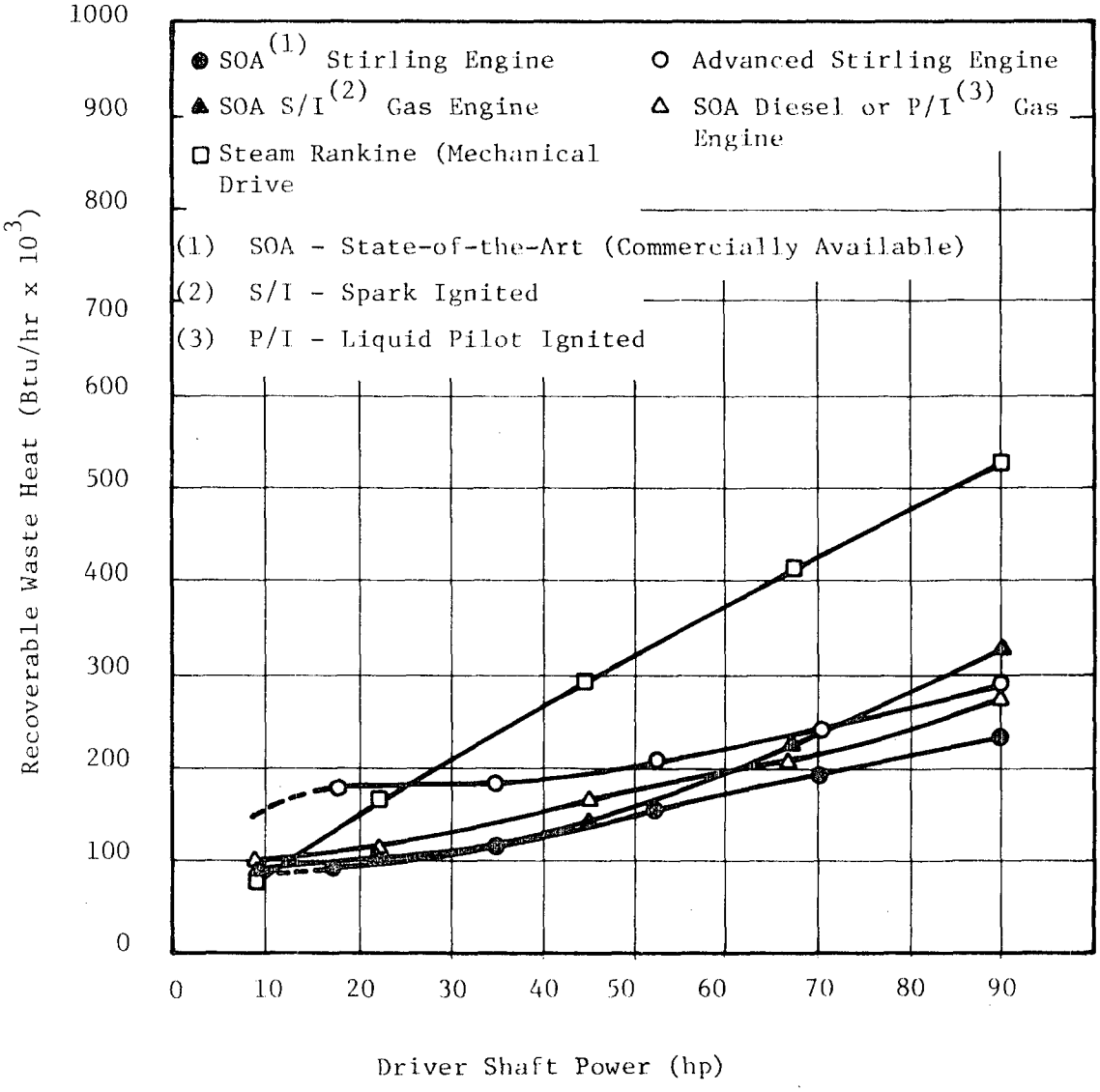

Fig. 2.3-13 Recoverable Waste Heat Comparison of Alternate Drivers

792746

MECHANICAL TECHNOLOGY INCORPORATED

was adjusted for each driver so as to always yield a driver output of 90 hp (given that each driver has a different thermal efficiency).

2.3.6.2 Additional System Modeling. The alternate driver study incorporated two additional options for each separate driver. External heat pumping (outside air heat recovery) was compared to no external heat pumping (electric power generation) and modulated driver operation was compared to base-loaded operation. Both of these options required some modeling changes which are briefly described as follows.

There were no internal heat pumping sources available in this enonomy motel application. Consequently, only external source heat pumping was considered for the "heat pumping" option. Major remodeling of the refrigeration system was considered outside the scope of the alternate driver study. Therefore, the "heat pumping" option was modeled as a two-stage compression process similar to the one shown schematically in Figure 2.2-3. Here, the second stage of the heat pump doubled as the chiller compressor in the air conditioning season. Thus, the most up-to-date, refined, heat exchanger and compressor model as described in Sections 2.3.1 and 2.3.3, could remain intact. The first stage of the heat pump was modeled as it existed in an earlier version of the model (as described in Section 2.2.1.1). The two heat pump stages interface with each other through the chilled water loop as shown in Figure 2.2-3. In the model, both compressors operated when the system was in the heat pumping mode, whereas only the second compressor (C2) operated during the cooling mode.

Although the earlier system models (Sections 2.1 and 2.2) required two-stage heat pumping for external air sources, the two-stage heat pumping was not required for the motel application. The primary reason for this difference was that the earlier models used baseboard radiation in the heat distribution system with a scheduled water temperature reaching a maximum temperature of 180°F at 0°F ambient. The model studied here used fan coils in the heat distribution system with a constant 110°F water supply temperature. The evaporating and condensing conditions required with the lower water temperature were well within the capabilities of positive displacement screw type compressors.

The significance of single-stage versus two-stage heat pumping is discussed in Section 2.3.6.3.

As described in Section 2.3.1, all reject heat generated in the refrigeration cycle was dumped into the cooling tower by means of the refrigeration condenser. In theory, it was believed that an auxiliary steam generator could provide any additional heat (aside from the driver reject heat) to satisfy the building heating load more efficiently than by utilizing the reject heat from the refrigeration cycle. In order to evaluate the soundness of this theory, the system model was changed to allow waste heat from the refrigeration loop to be utilized in satisfying the building heating load. Specifically, the refrigeration condenser was modeled as a double-bundle condenser, one coil serving the heating system and the other coil dumping excess heat, if any, to the cooling tower. The equations for the temperatures in the double-coil refrigerant condenser were identical to those equations derived for the double-bundle steam condenser in Section 2.3.1.2.

The system flow chart changes for the external heat pumping inclusion are shown in Figure 2.3-14. Other changes for modeling part-load driver operation, also shown in this figure, are described in the following paragraphs.

Each alternate driver was modulated against the building heating load, and was compared for base-loaded operation. In particular, the driver was utilized at part-load in order to satisfy the heating load with its reject heat. If the minimum utilization did not satisfy the heating load, the driver output power was increased to the point at which the heating load was satisfied or to maximum driver output power (90 hp). If the heating load was still not satisfied at maximum driver power output, the auxiliary steam generator was utilized to supply the remaining heat needed.

Modulated operation with each alternate driver was possible with and without external heat pumping as shown in the flow chart of Figure 2.3-14 and as discussed in the results which follow.

2.3.6.3 Discussion of Results. The results of the alternate driver study are presented in Table 2.3-4. For each combination of load control mode, external

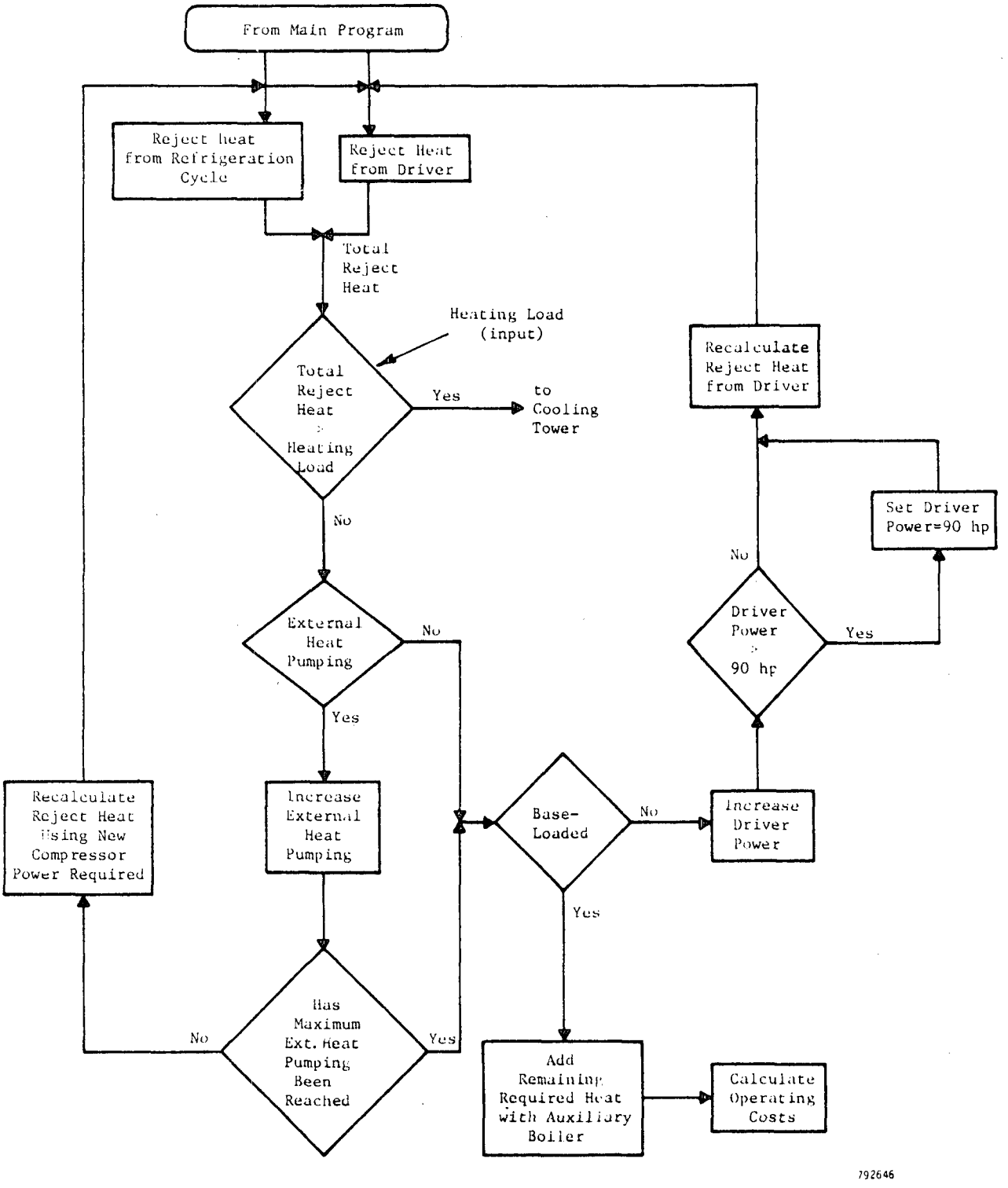

Fig. 2.3-14 Flow Chart Additions for Alternate Driver Study to Include External Heat Pumping and Modulated Driver Load Operation

TABLE 2.3-4

ECONOMY MOTEL APPLICATION
ENERGY COST AND CONSUMPTION[9]

Control/Configuration		Prime Mover					
Load Control	Configuration	Steam Rankine	S/E (Adv)[1]	S/E(Exist)[2]	P/I Diesel[3]	S/I[4]	Elect.[5] Motor
Base Loaded	Heat[8] Pumping	$23.3[6] (7.98)[7]	21.5 (6.62)	22.2 (7.04)	22.0 (6.78)	22.9 (7.37)	--
Base Loaded	No Heat Pumping	19.8 (7.55)	17.7 (6.39)	18.6 (6.77)	17.4 (6.46)	17.9 (6.87)	--
Modulated	Heat Pumping	27.6 (8.01)	26.6 (7.50)	27.8 (8.00)	27.0 (7.51)	27.6 (7.95)	37.6 (8.92)
Modulated	No Heat Pumping	24.2 (6.85)	25.0 (7.06)	25.4 (7.18)	23.2 (6.73)	23.8 (6.98)	32.7 (8.68)

(1) Stirling engine advanced design

(2) Stirling engine existing P75 design

(3) Pilot-ignited gas-fired Diesel (existing)

(4) Spark-ignited gas-fired engine

(5) Electric-motor-driven chiller/heat pump with gas-fired boiler

(6) Energy cost $1000/yr for gas @ $2.2/10^6 Btu, and electric @ 4¢/kWhr and $3/kW/mo demand

(7) Total energy consumed by system 10^9 Btu/yr

(8) External source two stage heat pumping

(9) Excluding process loads

MECHANICAL TECHNOLOGY INCORPORATED

heat pumping and prime mover, the table presents both the annual operating cost and the corresponding primary energy consumption (natural gas and/or fossil fuel) in parenthesis. The heating loads excluded all process load requirements for the building, for reasons explained in Section 2.3.7.

Several conclusions could be reached from the results shown in Table 2.3-4.

1. In all cases, it was better to base load the drivers than to modulate their output.

2. On an annualized basis, all drivers showed an advantage without heat pumping, both from energy cost and consumption standpoints. In the cases without heat pumping, the engines drove a generator during the heating season. Table 2.3-5 shows an example of how the energy costs and consumptions were distributed for the steam-Rankine and advanced Stirling engine.

3. The large heating load for this application masked the sizable differences in thermal efficiency which existed between the various alternate heat engines. The higher efficiency and reduced amounts of recoverable heat for the alternate drivers resulted in large requirements of heat from the auxiliary steam generator where an 83% efficiency was assumed for all systems. Thus, good driver efficiencies became diluted by the auxiliary steam generator performance. In particular, the operating cost difference between the base-loaded, no heat-pumping Stirling engine (advanced) and the spark-ignited (S/I) gas engine was 1% whereas their full-load efficiencies were different by 19% (.366 and .307, respectively).

This masking effect could be best understood by reviewing a series of performance and load curves (Figures 2.3-15 to 2.3-19) which were developed early in the alternate driver study. The purpose of this adjunct analysis was to obtain an engineering "feel" for the significance of the obvious factors which were expected to influence operating cost and performance. Some of these factors included: driver efficiency, rejected heat, and heating/cooling loads. This analysis was the result of hand calculations done before

TABLE 2.3-5

COMPARISON OF 90 HP BASE-LOADED STEAM RANKINE AND ADVANCED STIRLING ENGINES IN HEATING MODE - SAMPLE CASE*

	Steam Rankine		Stirling Engine (Advanced)	
	Heat Pumping	Not Heat Pumping	Heat Pumping	Not Heat Pumping
Heat Rejected from Engine	559,426	555,316	242,832	239,180
Heat Pump Condenser Load Btu/hr	327,346	-	632,987	-
Auxiliary Boiler Output, Btu/hr	-	331,456	10,954	647,592
TOTAL Heat Load, Btu/hr	886,772	886,772	886,773	886,772
Fuel Input to Engine	941,973	941,973	633,134	633,134
Fuel Input to Auxiliary Boiler	-	399,345	13,197	780,231
TOTAL Fuel Input	941,973	1,341,318	646,331	1,413,365
HVAC System Parasitic Loads Pumps, Fans, Controls, etc., kW	38.09	31.11	39.93	31.18
TOTAL Purchased (Exported) kW for HVAC System	11.76	(30.84)	36.48	(33.10)
For 733 hr of Operation:				
Energy Cost				
Gas @ $\$2.2/10^6$ Btu	$1,601.92	$2,281.05	$1,099.15	$2,403.57
Electric @ $0.04/kW-hr	363.62	(953.57)	1,127.96	(1,023.45)
	$1,965.54	$1,327.48	$2,227.11	$1,380.12
Energy Consumption, Btu x 10^8				
Gas	7.28	10.37	5.00	10.93
Electric	1.05	(2.74)	3.24	(2.94)
	9.33	7.63	8.24	7.99

*Conditions: 30°F ambient, 886,772 Btu/hr heating load, no cooling load, 733 hours per year duration.

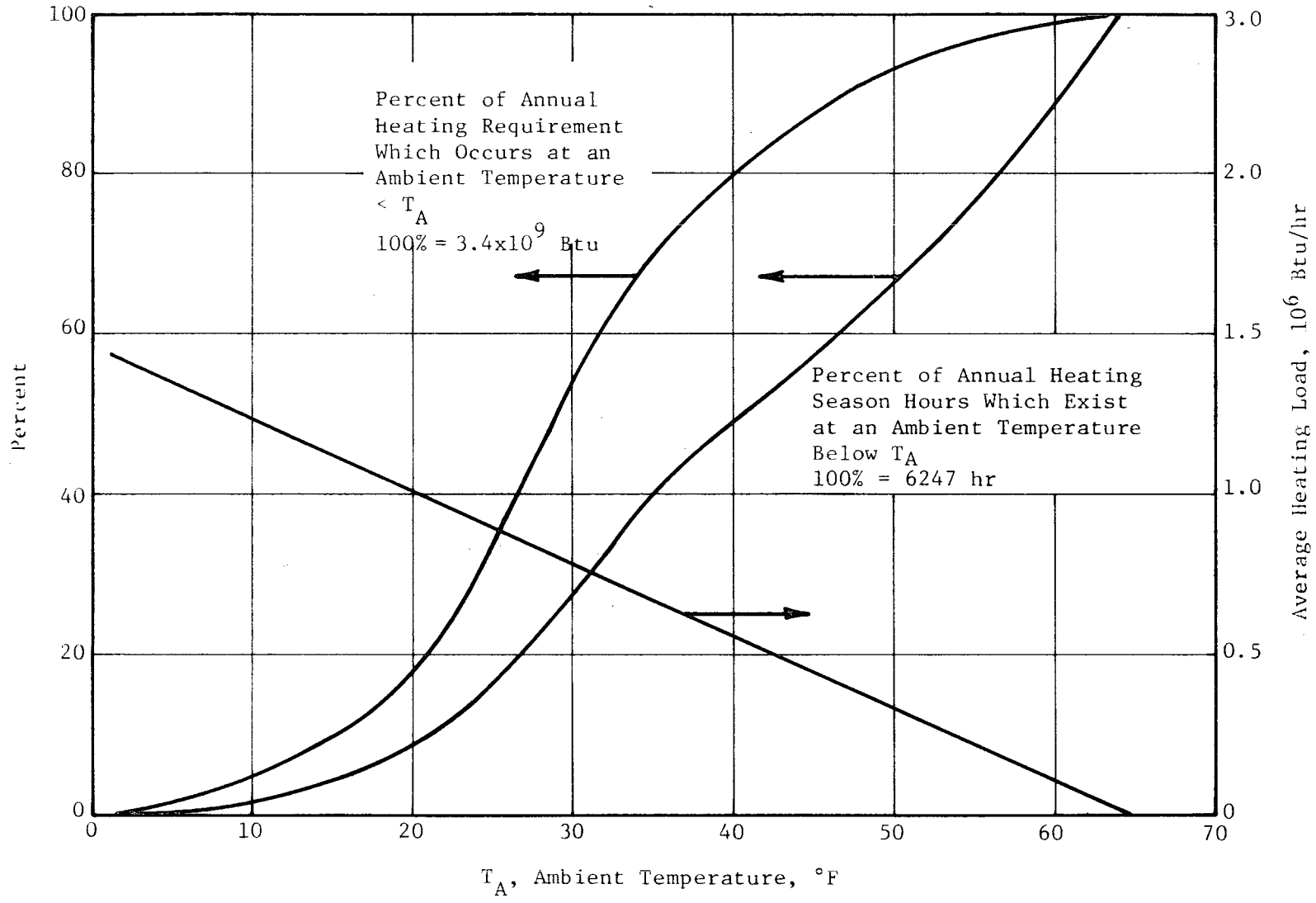

Fig. 2.3-15 Heating Requirement Distribution and Average Heating Load versus Ambient Temperature for Economy Motel Which Requires 125 Ton of A/C Load - No Process Loads Included

792722

MECHANICAL TECHNOLOGY INCORPORATED

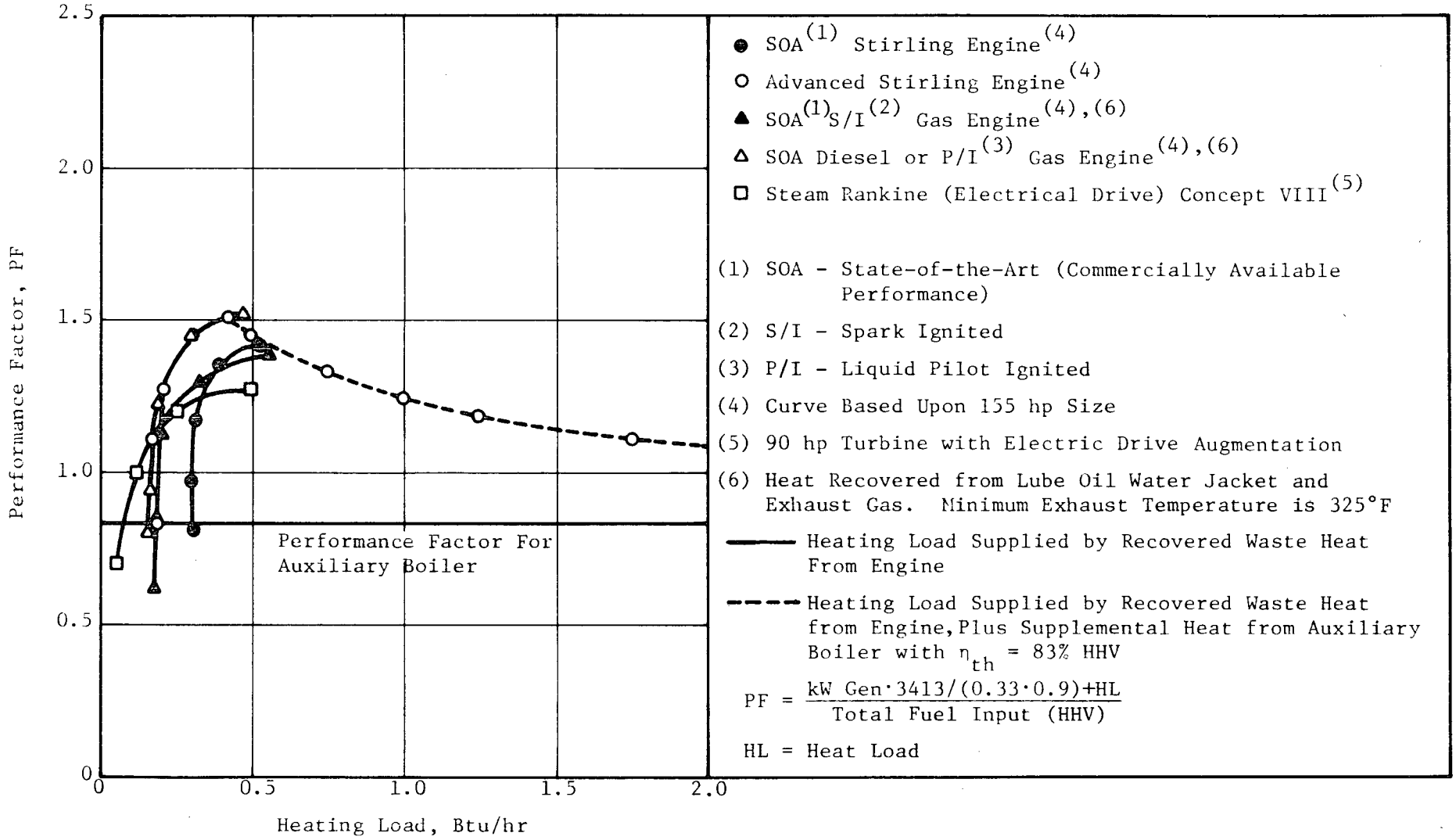

Fig. 2.3-16 Heating Mode Performance Factors for Engine/Generator Sets with Waste Heat Recovery. All Engines Are Modulated on Power Output to Match Their Recovered Waste Heat to the Heating Load.

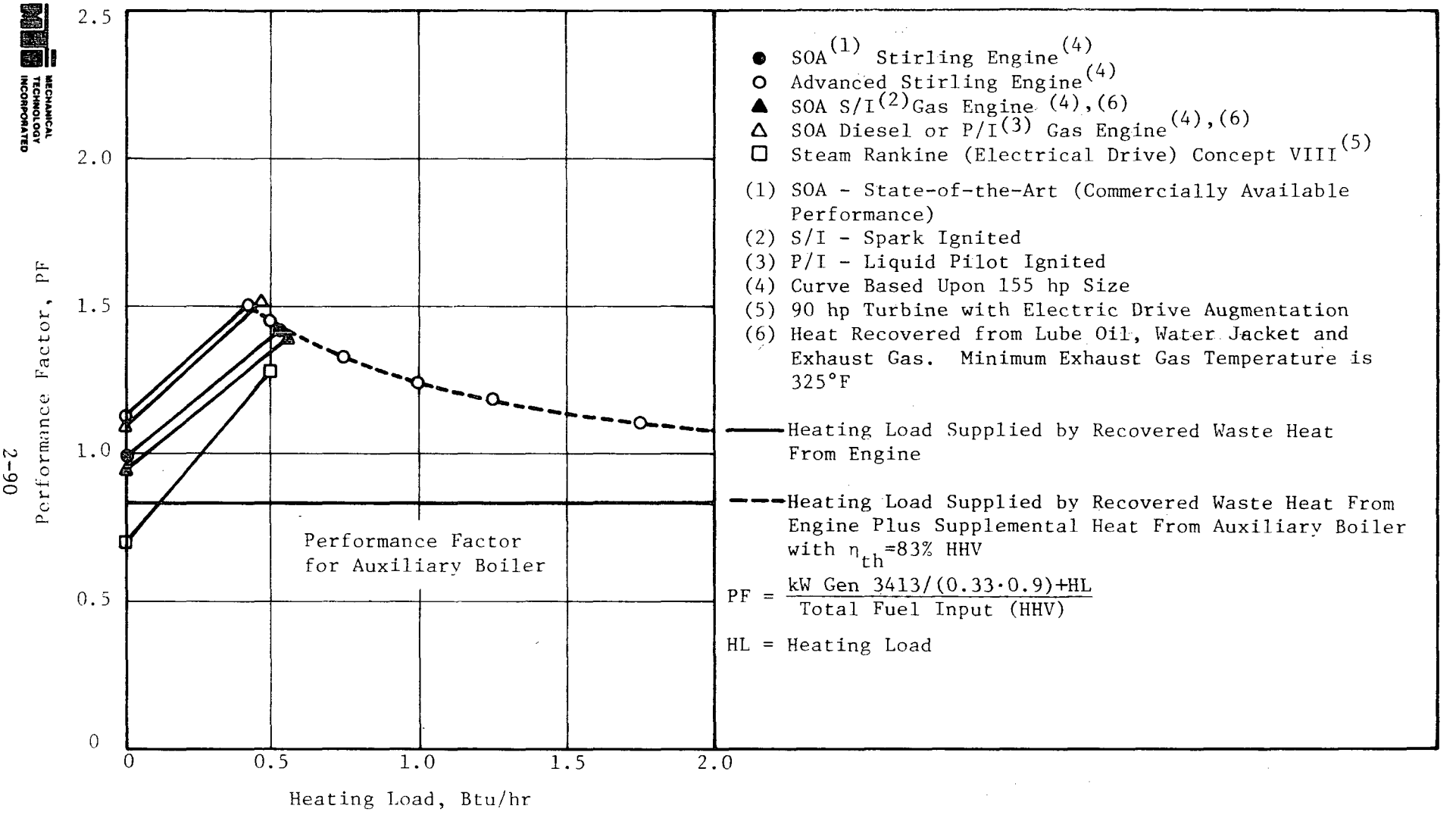

Fig. 2.3-17 Heating Mode Performance Factors for Various Engine/Generator Sets with Waste Heat Recovery. All Engines Are Base Loaded at Full Power Output

MECHANICAL TECHNOLOGY INCORPORATED

792727

completing the detailed modeling described in Section 2.3.6.2. For ease of analysis, all the alternate drivers were full-sized drivers (155 hp), as required to meet the compressor power requirement during the maximum cooling condition. This size selection avoided the complications of including the mixed-mode operation of the motor (generator) in the manual calculations which would otherwise be required for the actual 90-hp driver size - as used in the detailed computer modeling. Separate analyses were done with respect to heating-only and cooling-only modes of operation. Later, the 90-hp, steam-Rankine system was also plotted on these curves. These driver size differences should have been taken into account when the alternate drivers were compared with the steam-Rankine system.

Figure 2.3-15 illustrates the nature of the heating load for the motel building used in the alternate driver study. The average heating load was about 0.8×10^6 Btu/hr, based on annual heating requirements; however, the mid-point of the heating season (6247 hr) occurred at a load of about 0.53×10^6 Btu/hr. The motel's annual cooling season was about 3600 hours in length and overlapped the heating season by about 2050 hours.

Figures 2.3-16 and 2.3-17 present the heating mode performances of the engines driving the electric generators (i.e., without heat pumping) with modulated and unmodulated (base-loaded) controls, respectively. Both modes of control produced the same results when the heating load exceeded the engine's maximum available rejected heat. Supplementary firing was required from the auxiliary boiler. At the high heating loads, differences in driver efficiency had little effect on system performance factors. As shown in Figure 2.3-17, the advanced Stirling engine's performance was practically identical to the spark-ignited gas engine's performance, even though they had 36.6% and 30.7% thermal efficiencies respectively. If the alternate drivers were to be scaled down in size from 155 hp to 90 hp (matching the steam-Rankine drive) then all drivers would display the same performance factor for heating loads greater than 0.5×10^6 Btu/hr (maximum heat rejection from the steam-Rankine cycle). Considering that the average heating load occurred at nearly 0.8×10^6 Btu/hr, a major difference in energy consumption could no be expected for any of the drivers (including the steam-Rankine system) solely on the basis of heating load, providing the process load was not included.

Modulating the engine's output to match its heat rejection rate to the building's heating load offered a small performance advantage over base loading the engines in the mid to upper end of the engine load range. However, at low heating loads (low engine loads) the alternate drivers suffered dramatically due to sharp reductions in thermal efficiency at part-load conditions. Thus, the base-loaded mode of the control was expected to outperform the modulated mode of control.

A similar analysis was conducted for the alternate drivers which drove a heat pump instead of an electric generator. The results of this analysis are shown in Figure 2.3-18. A conventional electric motor drive was included to form a basis of comparison with other heat pump drivers. For the purpose of this illustration an assumption was made that the refrigerant part of each system had a COP of 3.0, regardless of load on the compressor. The system shown here modulated the drivers so the combined quantity of rejected heat from the engine and heat pump condenser equaled the building's heat load. Again, comparing the results as presented in Figure 2.3-18 to those for the base-loaded, without heat-pumping case (see Figure 2.3-17) showed that the modulated heat pumping case would be a less attractive concept.

The performance factor curve shown in Figure 2.3-18, for the steam-Rankine system was based upon a 90-hp turbine using an electric motor to augment its output. The inflection point in this performance curve corresponded to the point where the turbine was fully loaded and the electric motor started to pick up part of the compressor load. With similar sized alternative drivers (i.e., 90 hp instead of 155 hp) those curves also would have contained inflection points.

Figure 2.3-19 illustrates the difference in primary fuel requirements for the various drivers when powering the chiller compressor. Here again, an electric motor drive was included for reference purposes on the following basis:

$\eta_{motor\ F/L}$ = 92.9%

$\eta_{power\ plant}$ = 33%

$\eta_{electrical\ power\ transmission}$ = 90%.

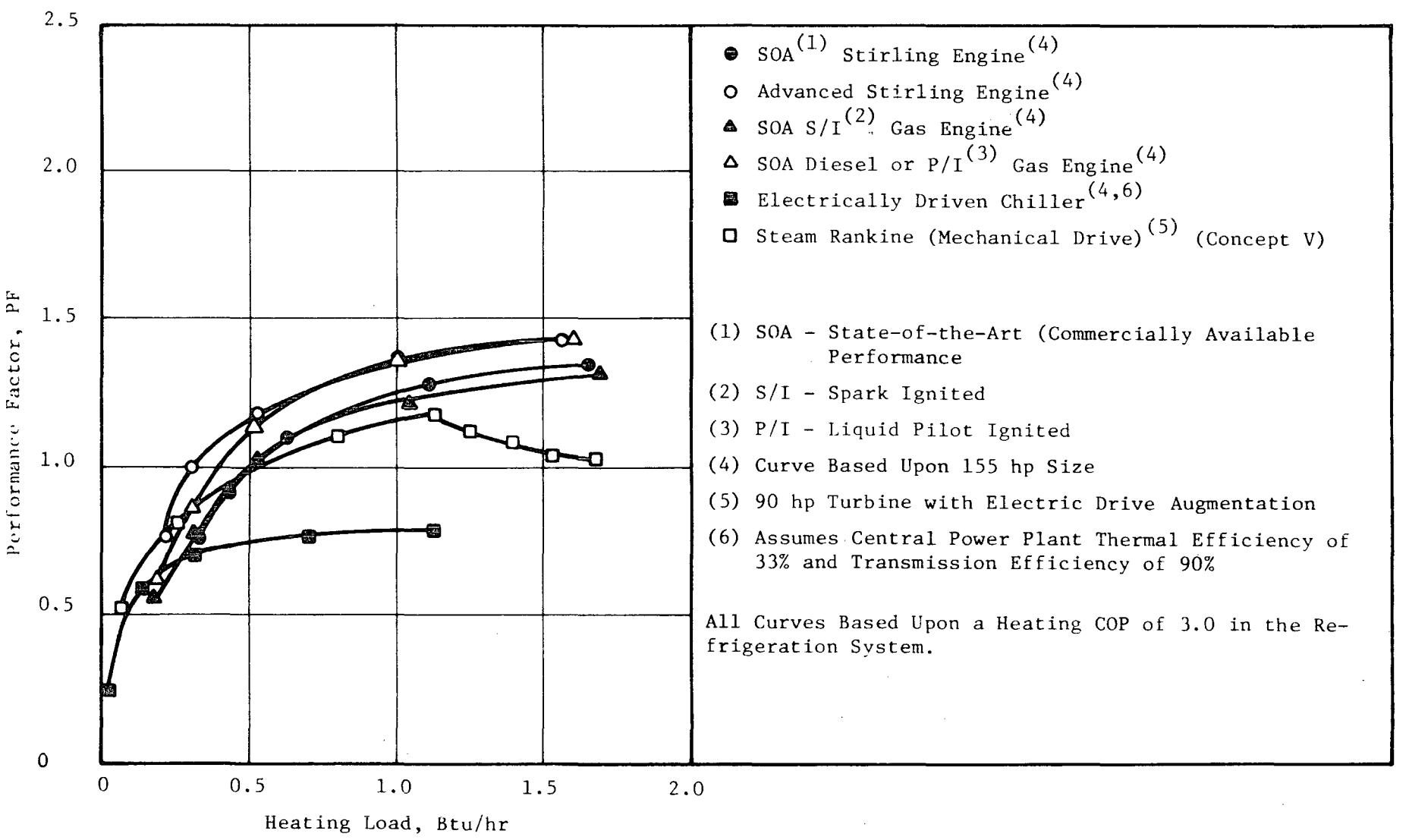

Fig. 2.3-18 Primary Equipment Performance Factors of Heat Pump Systems Showing Effects of Various Types of Drivers. All Drivers are Modulated in Power Output so that the Total Rejected Heat from the System Equals the Building Heating Load. The Primary Equipment Only Includes the Driver and Refrigeration System, i.e., No Distribution System Losses

MECHANICAL TECHNOLOGY INCORPORATED

793062

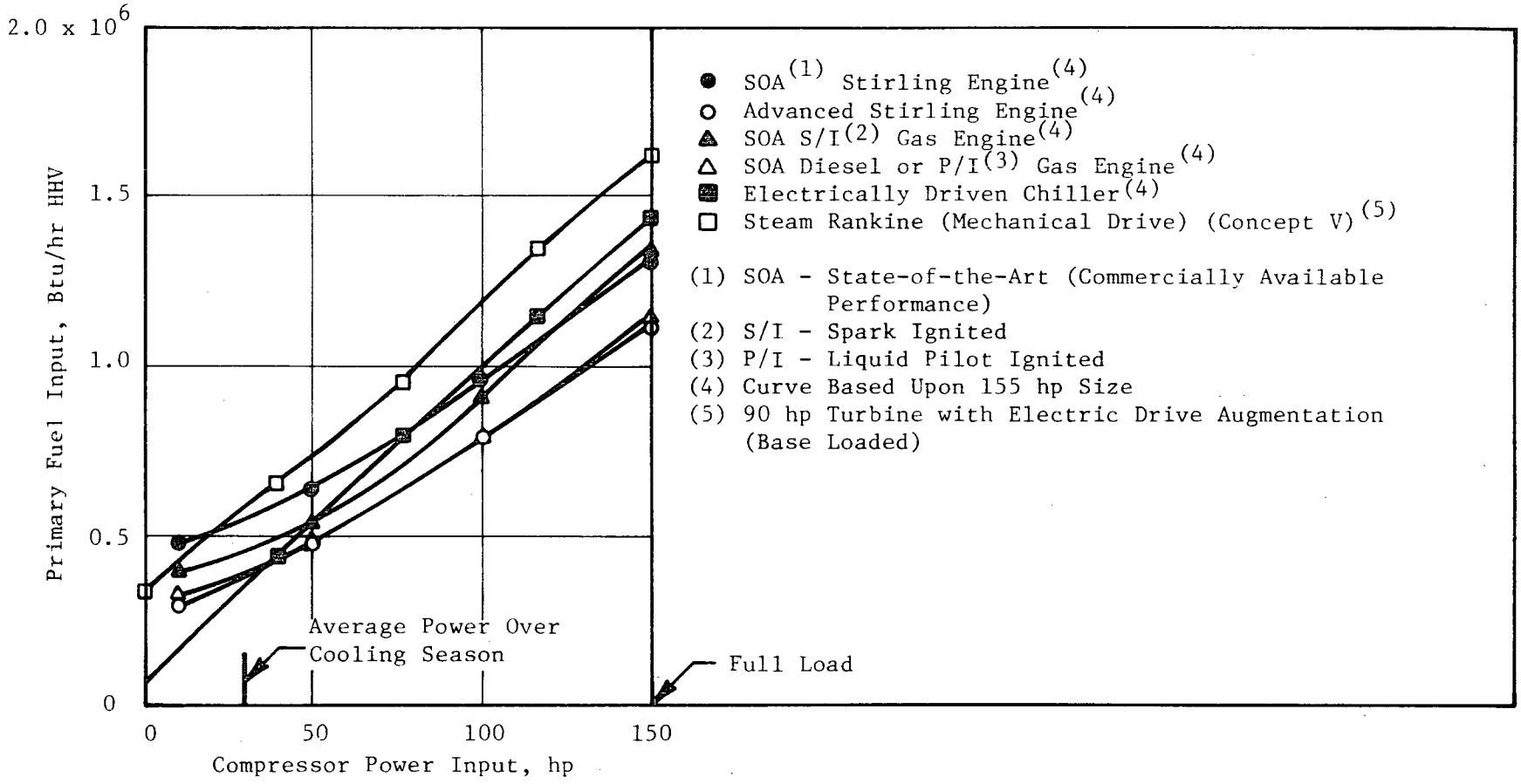

Fig. 2.3-19 Relative Primary Fuel Requirements for a 125 Ton Chiller Using Various Types of Drivers

MECHANICAL TECHNOLOGY INCORPORATED

All the drivers were 155 hp with the exception of the steam-Rankine driver which was 90 hp. A quick appraisal of the differences in performance would have suggested that the most efficient alternate drivers would show considerable advantage over the steam-Rankine cycle and other less efficient engines. Although this advantage was applicable for the cooling mode it had little impact on the overall annual energy cost and consumption, since the annual cooling load represented less than 110,000 hp-hr of chiller compressor energy input. Neglecting driver and drive train losses, the entire energy cost for the chiller compressor was less than $3300/yr at $.04/kW-hr - less than 15% of the total annual energy cost. Thus, the impact of the differences in driver efficiencies (in the cooling mode) was not observed in the overall energy costs.

Therefore, the results shown in Table 2.3-4 were predictable, in that relatively little difference existed in energy cost or usage for all the drivers within a given mode of load control and configuration. The major differences occurred between the various modes of load control and configuration. The exception was the base case electric motor driven chiller, which was about 30% higher in energy cost and consumption.

The significance of two-stage versus single-stage heat pumping was examined subsequent to the modeling activity. As explained in Section 2.3.6.2, the results which appear in Tables 2.3-4 and 2.3-5 were calculated on the basis of two-stage rather than single-stage heat pumping. Figure 2.3-20 presents the overall COP_H of the two-stage process as well as the performance of each stage at full-load conditions. At part-load, a correction factor similar to the one shown in Figure 2.1-9 had to be applied. Figure 2.3-21 presents a comparison of the single-stage and overall two-stage performances, showing that the single-stage performance was slightly better than the two-stage performance at ambients >5°F. An analysis of the pumped heat (in the case of the base-loaded, steam-Rankine system) showed: 1) that 22°F was the mean ambient temperature for the pumped heat, 2) that the entire pumped heat load consisted of 943 x 10^6 Btu, and 3) that about 140,000 hp-hr of compressor shaft power were required (overall COP_H = 2.65) for the heat pumping function.

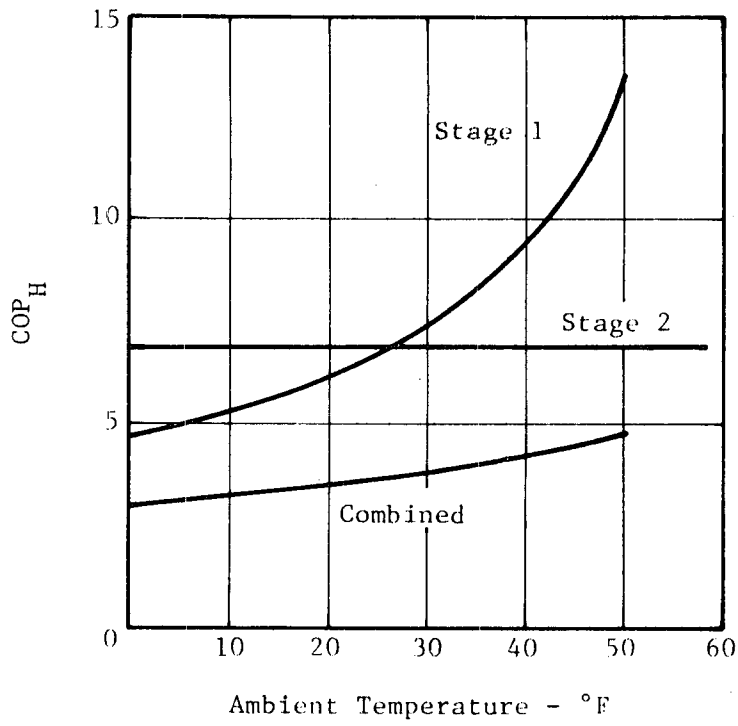

Fig. 2.3-20 External Source Heat Pumping via Two Stages, Showing Stage COP and Overall COP. Assuming Both Stages Operate at Full Capacity

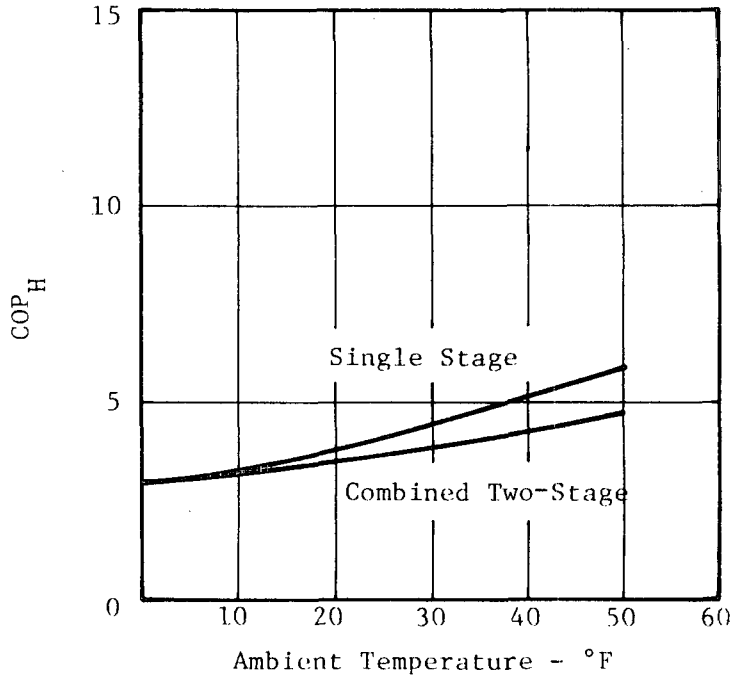

Fig. 2.3-21 External Source Heat Pumping Comparing Overall Performance of Two-Stage Heat Pumping with Single-Stage Heat Pumping

Figure 2.3-21 shows that less than 10% difference existed in the single-stage/two-stage performance at 22°F ambient. Assuming a corresponding savings in compression energy existed, the single-stage heat pumping could have reduced the annual energy costs by $390 per year. This amount was insignificant in relation to the overall energy cost and would not have made the heat pumping case appear more attractive than the cases without heat pumping shown in Table 2.3-4.

2.3.7 System Optimization Results for Economy Motel Application

Process loads were included in the heating loads of the economy motel (delivered at the same temperature as the space heating load, 110°F) to determine their effect on system performance. Using the base-loaded, without heat-pumping, steam-Rankine case (Table 2.3-4) as a point of reference, an annual process load of 4.6×10^8 Btu raised the annual operating cost by $1,518 and the energy consumption by 8.1×10^8 Btu, if the heat was derived from the steam condenser. If instead, the entire process load was supplied by the auxiliary steam generator, the annual cost of using gas to meet this load would have been $1,220 with an increased energy consumption of 5.5×10^8 Btu. Therefore, from an economic standpoint, it was more favorable to use the auxiliary steam generator (rather than the steam condenser) to supply the process loads. However, the opposite trend would have existed if either of the internal combustion gas engines were substituted for the steam-Rankine cycle. The external combustion Stirling engine was also sensitive to the temperature level into which the engine rejected heat, but to a lesser extent than the steam-Rankine cycle.

The reason for the deterioration of performance from the steam-Rankine cycle when supplying the process load stemmed from the fact that there were ordinarily no heating loads during the summer months. This lack of heating loads normally resulted in a relatively low (≈70-80°F) steam condensing temperature which was controlled by the cooling tower exit temperature. This resulted in a high thermal efficiency of the steam-Rankine system. However, when the heating load became non-zero because of the small process load, the condenser temperature had to exceed the heating system hot water delivery temperature of 110°F. Then, the thermal efficiency of the steam-Rankine

system deteriorated significantly, resulting in reduced power output from the turbine and an increase in purchased electrical power for the building. Therefore, the reoptimization of the system was done on the basis of using heating loads which did not include process loads.

The optimization procedure and method have been extensively explained in Section 2.3.4. The ranges on the independent variables (four heat exchanger areas and heating system water flow rate) were identical to those previously used for the office building application. The starting point for the system reoptimization study was identical to the optimum heat exchanger sizes determined in Section 2.3.4 for the office building application. Table 2.3-6 presents the results of the reoptimization study for the economy motel. It was evident that the large changes in heating and cooling loads had an insignificant effect on either the heat exchanger capital cost or the energy operating costs. This result was desirable, inferring that an optimum design for one application would operate at near-optimum performance in a different application.

TABLE 2.3-6

ECONOMY MOTEL APPLICATION(*)
STEAM RANKINE SYSTEM OPTIMIZATION

Design Parameter	Initial	Final	
		Concept VIII	Concept V (Modified)**
Steam Condenser Areas, ft^2:			
Heating System Bundle	153	157	140
Cooling Tower Bundle	99	105	118
Refrigerant Condenser Areas, ft^2:			
Cooling Tower Bundle	813	700	700
Refrigerant Evaporator Area, ft^2:	577	569	525
Heating Loop Water Flow, GPM	229	243	233
COST TRADEOFFS			
Heat Exchanger Capital Cost	$26,688	$26,518	$25,898
System Energy Cost/yr	Concept VIII: $21,445	$21,490	$19,248
	Concept V (Modified) : $19,849		

* Does not include process load.

**Total parasitic losses same as Concept VIII

MECHANICAL TECHNOLOGY INCORPORATED

3.0 COMPONENT DESIGN EFFORT - TASK VI-3

3.1 Introduction

The components of the large size model (LSM) system are presented schematically in Drawings 2 and 3. Each individual component's specification and/or design was completed to the extent necessary to develop a manufacturing cost estimate for the system. In many cases cost and performance compromises were required to arrive at a cost-effective design. The engineering layout for the mechanical drive machinery package is shown in Drawing 4.

3.2 Refrigerant Compressor

3.2.1 Alternatives Considered

Two types of compressors were considered - centrifugal and positive displacement screw. The results of the system modeling analysis (Section 2.2) showed that, if the system pumped heat, a positive displacement screw compressor would be required for the application. The requirement for a positive displacement compressor was caused by the broad flow and heat requirements. However, the system design analysis showed that heat pumping was not effective for the base-loaded LSM concept. Therefore, without a need to pump heat, the centrifugal compressor offered potential cost advantages. This compressor offered the potential of an oil-free system, thus eliminating the oil separation equipment along with the separate lube oil systems - both necessary for the screw compressor. The centrifugal compressor also offered the potential advantage of operating at the same speed as the high-speed turbine expander, thus eliminating the gear reductions. On this basis, the centrifugal compressor was selected.

3.2.2 Refrigerant Selection

The choice of working fluid was made on the basis of cost effectiveness, component size, system reliability as well as overall system performance. A parametric study was conducted using four refrigerants having a wide range of densities. With each refrigerant, different sizes of equipment components were shown operating at different pressures and speeds. A summary of this study is presented in Table 3.2-1.

Freon-12 was chosen for the system since it allowed modest system dimensions and speed without exceedingly high condenser and evaporator pressures; hence, it

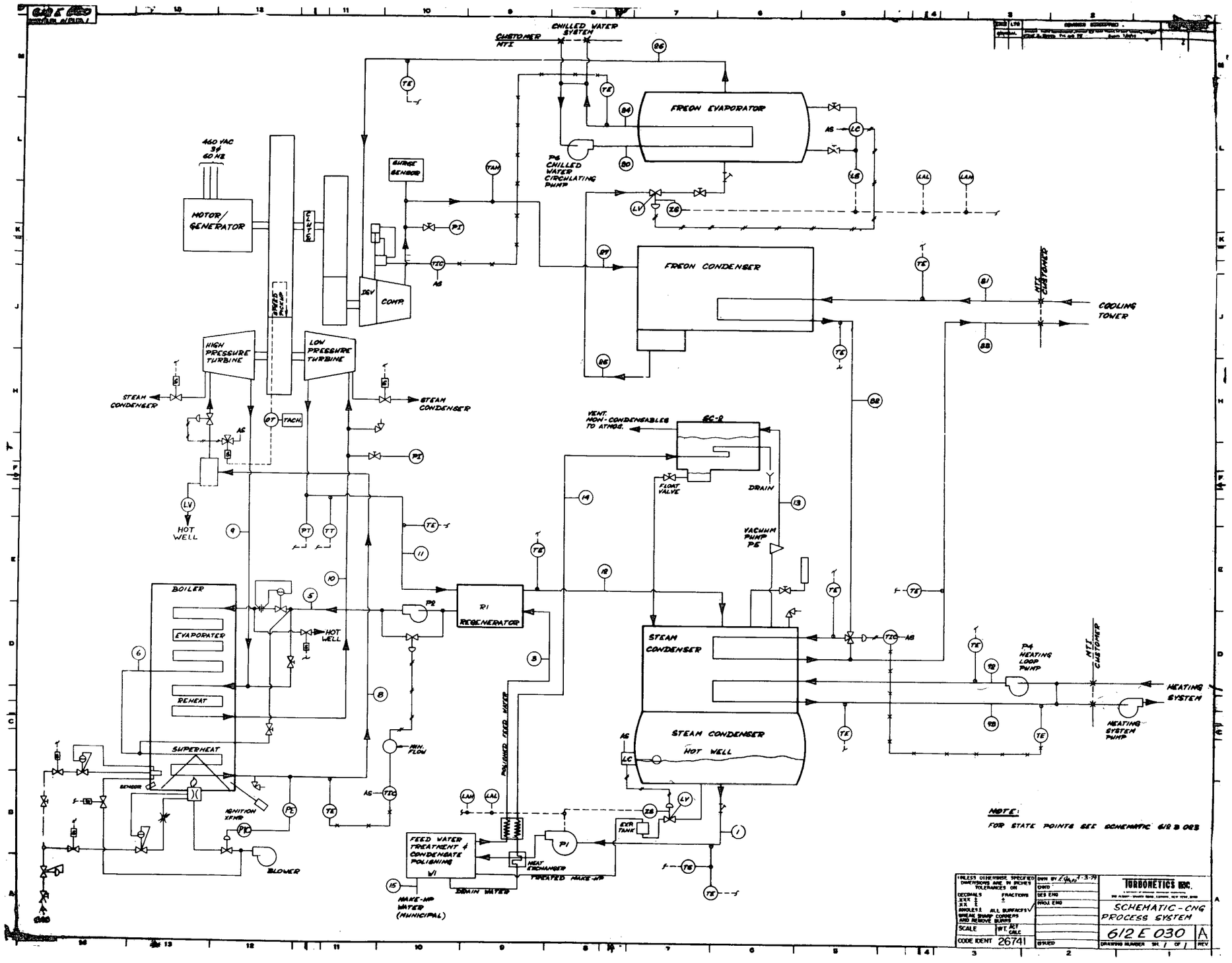
CHILLED WATER SYSTEM
CUSTOMER MTI
FREON EVAPORATOR
P6 CHILLED WATER CIRCULATING PUMP
460 VAC 3φ 60 HZ
MOTOR/ GENERATOR
CLUTCH
SURGE SENSOR
IGV
COMP.
FREON CONDENSER
COOLING TOWER
MTI CUSTOMER
HIGH PRESSURE TURBINE
LOW PRESSURE TURBINE
STEAM CONDENSER
STEAM CONDENSER
TACH.
VENT. NON-CONDENSABLES TO ATMOS.
EC-2
FLOAT VALVE
DRAIN
VACUUM PUMP P5
HOT WELL
BOILER
EVAPORATOR
REHEAT
SUPERHEAT
HOT WELL
R1 REGENERATOR
P2
MIN. FLOW
POLISHED FEED WATER
STEAM CONDENSER
STEAM CONDENSER HOT WELL
P4 HEATING LOOP PUMP
HEATING SYSTEM
HEATING SYSTEM PUMP
IGNITION XFMR
BLOWER
FEED WATER TREATMENT & CONDENSATE POLISHING W1
HEAT EXCHANGER
TREATED MAKE-UP
DRAIN WATER
MAKE-UP WATER (MUNICIPAL)
EXP TANK
P1
NOTE:
FOR STATE POINTS SEE SCHEMATIC 612 B 023
UNLESS OTHERWISE SPECIFIED DIMENSIONS ARE IN INCHES TOLERANCES ON
DECIMALS .XXX ± .XX ± .X ± FRACTIONS ±
ANGLES ± ALL SURFACES
BREAK SHARP CORNERS AND REMOVE BURRS
SCALE
WT. ACT CALC
CODE IDENT 26741
DWN BY
CHKD
DES ENG
PROJ ENG
ISSUED
TURBONETICS INC.
SCHEMATIC-CNG PROCESS SYSTEM
612 E 030
A
DRAWING NUMBER
SH. 1 OF 1
REV

Drawing 2

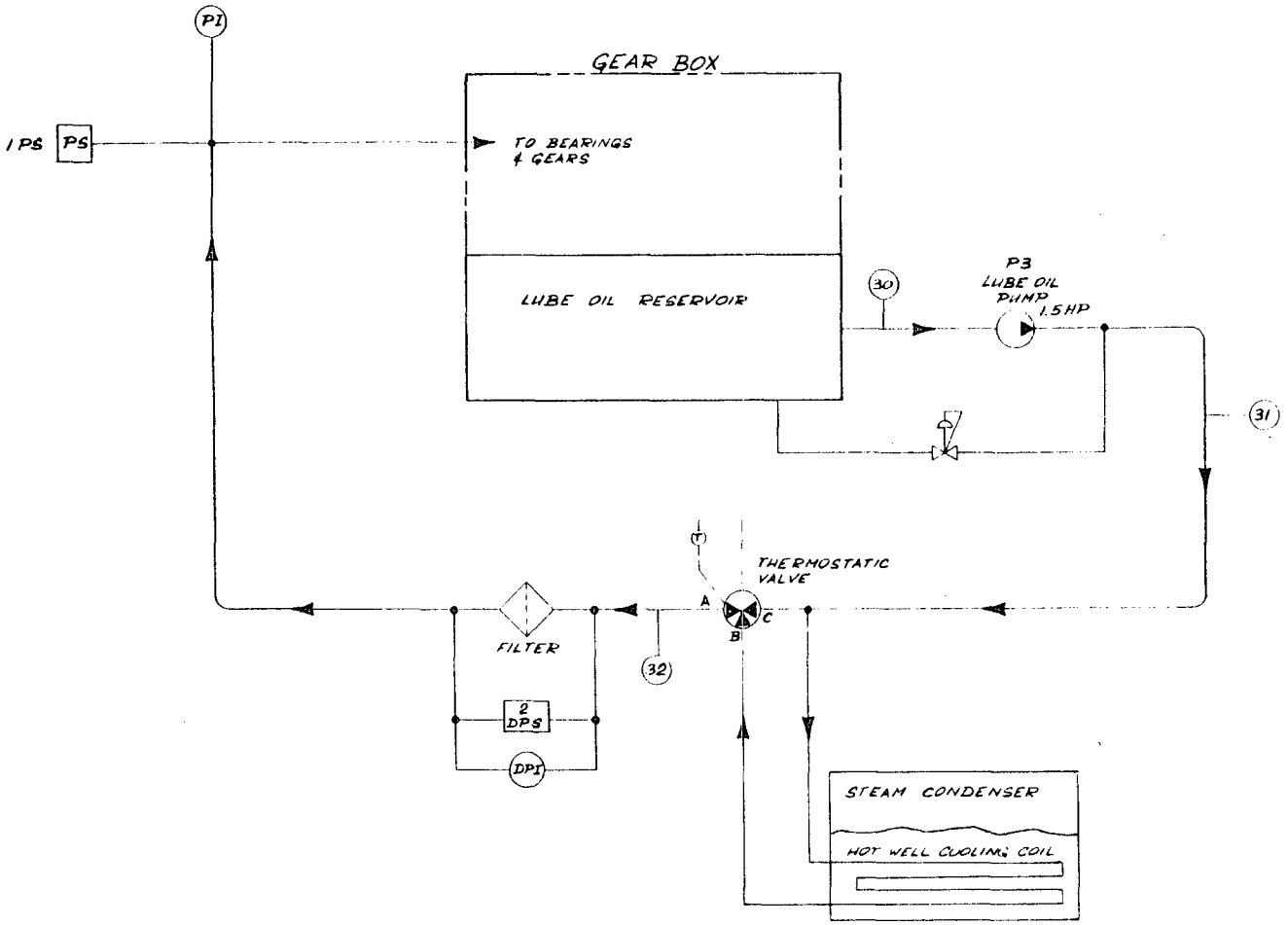

NOTE: REFERENCE DRAWING 612B023 FOR PROCESS STATE POINTS

UNLESS OTHERWISE SPECIFIED DIMENSIONS ARE IN INCHES TOLERANCES ON DECIMALS .XXX ± .XX ± FRACTIONS ± ANGLES ± ALL SURFACES ✓ BREAK SHARP CORNERS AND REMOVE BURRS	DWN BY 3-14-79 CHKD DES ENG PROJ. ENG	TURBONETICS INC. SCHEMATIC LUBE OIL CNG
SCALE / WT. ACT CALC		612 D 031
CODE IDENT 26741	ISSUED	DRAWING NUMBER SH OF REV

Drawing 3

MECHANICAL TECHNOLOGY INCORPORATED

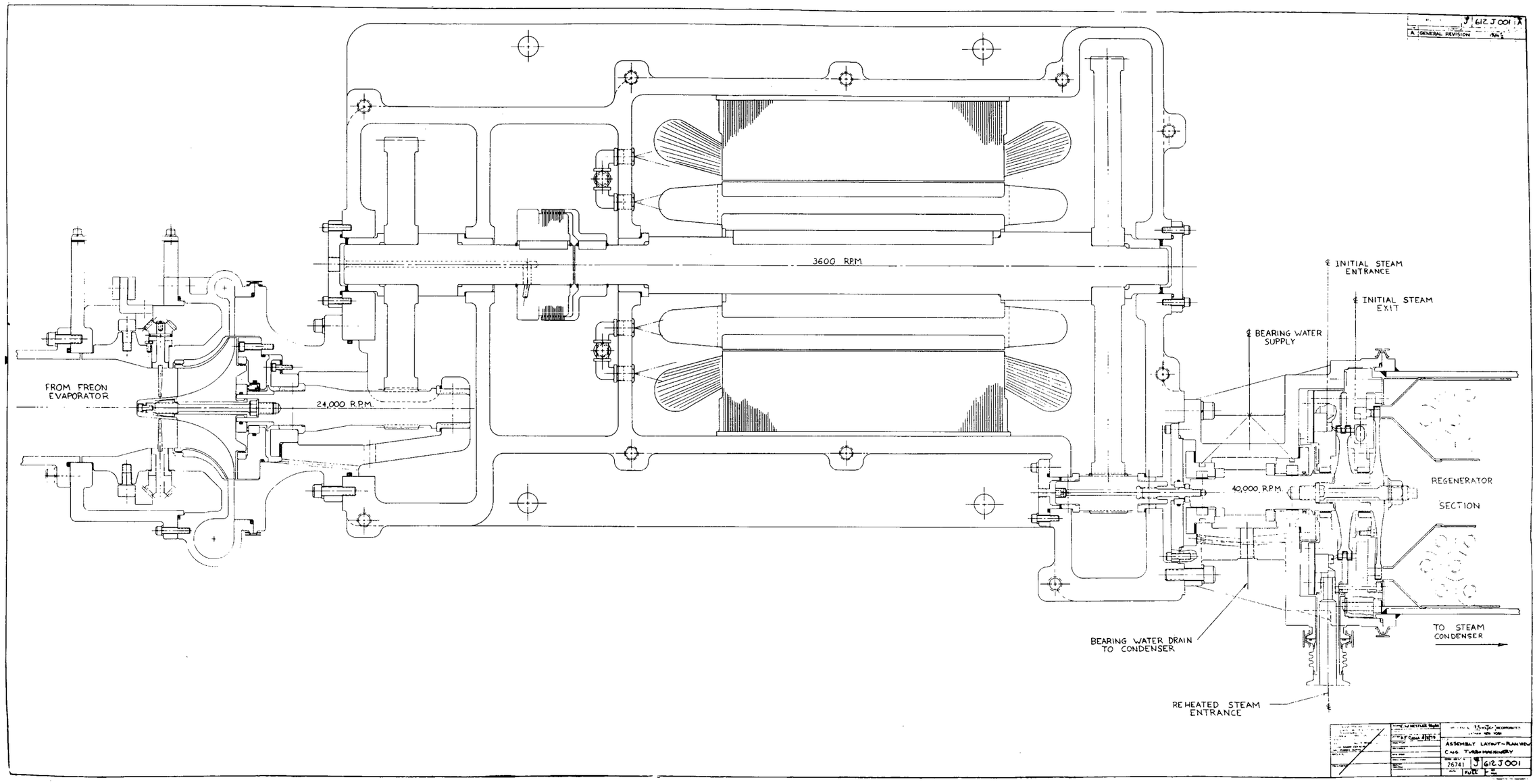
J 612 J 001 A
A GENERAL REVISION
3600 RPM
℄ INITIAL STEAM ENTRANCE
℄ INITIAL STEAM EXIT
℄ BEARING WATER SUPPLY
FROM FREON EVAPORATOR
24,000 R.P.M.
40,000 R.P.M.
REGENERATOR SECTION
TO STEAM CONDENSER
BEARING WATER DRAIN TO CONDENSER
REHEATED STEAM ENTRANCE
ASSEMBLY LAYOUT - PLAN VIEW
C.A.G. TURBOMACHINERY
26741
J 612 J 001
FULL

Drawing 4

TABLE 3.2-1

CENTRIFUGAL COMPRESSOR SIZING INFORMATION FOR THE 125 TON LSM CHILLER SHOWING THE SIGNIFICANT MECHANICAL AND PROCESS PARAMETERS

REF	FLOW LB/SEC	IMPELLER DIAMETER INCHES	SPEED RPM	HP AT DESIGN	PRESSURE EVAPORATOR PSIA	PRESSURE CONDENSER PSIA
R113	7.94	22.3	7,000	149.8	2	11.6
R11	6.33	13.6	12,200	133.7	5	25.6
R12	8.66	6.2	24,100	148.6	43	141.3
R22	6.28	4.5	39,500	150.4	70	225.5

MECHANICAL TECHNOLOGY INCORPORATED

offered the potential for a low-cost system. Freon-22 offered the best match of turbine expander speed and was the smallest system. This size advantage, as reflected in cost, was partially offset by the high internal pressures. Its pressure/shaft speed combination offered the most difficult sealing condition. The Freon-11 and Freon-113 candidates were both considerably larger systems, more costly, and operated at subatmospheric pressures. Consequently, they were not self-purging as Freon-12 and Freon-22 were.

3.2.3 Compressor Performance

The predicted performance map, presented in Figure 3.2-1, shows a constant speed, variable inlet angle performance for the Freon-12 compressor. A hypothetical operating line is also indicated, showing resulting decrease and increase in flow, pressure ratio, and efficiency as the inlet guide vanes were progressively closed to an 80 degree angle and opened to a 40 degree angle. Figure 3.2-2 presents the part-load performance of the chiller system while operating with a constant cooling water inlet temperature.

3.2.4 Aerodynamic Design

The design for the compressor is given in Figures 3.2-3 through 3.2-11 and in Table 3.2-2. The compressor was designed with backward-inclined blades, a vaneless diffuser and a scroll-type exit housing. The compressor was equipped with inlet guide vanes to achieve the broad operating range requirement.

The compressor was designed in accordance with the parameters presented in Table 3.2-3. Figure 3.2-3 shows the compressor design point in the N_s - D_s diagram in relation to the maximum obtainable performance. The design point was considered to be as close to the optimum as was practical without compromixing the compressor's geometry.

Figure 3.2-4 shows the compressor flow path giving the overall dimensions, while Figures 3.2-5 through 3.2-10 present the impeller blade design details. The exit scroll area schedule is shown in Figure 3.2-11.

The compressor was designed as a plug-in module consisting of the impeller, diffuser, scroll, inlet guide vanes, shaft seal, bearing and pinion gear. This

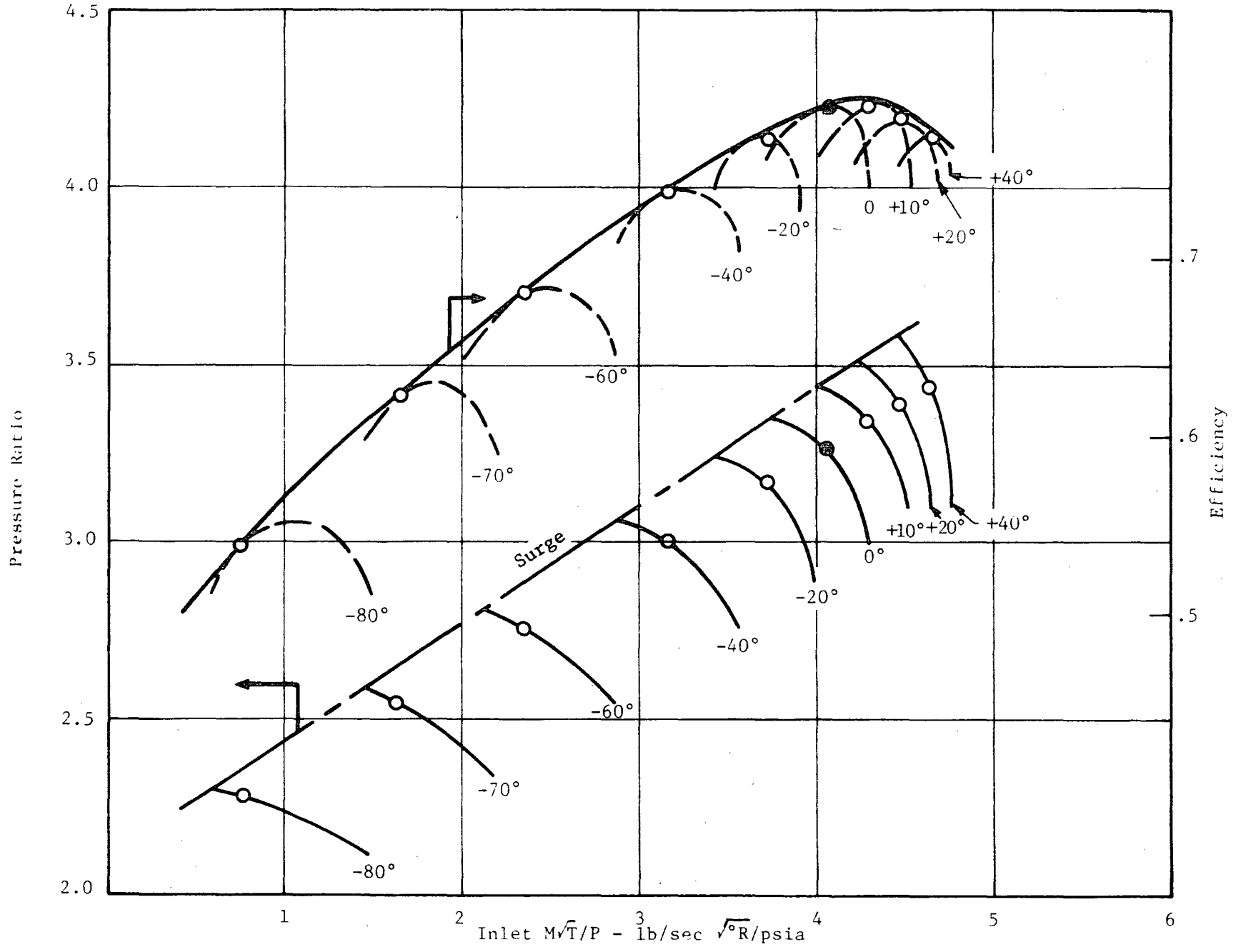

Fig. 3.2-1 CNG Compressor Performance R-12 Refrigerant

MECHANICAL TECHNOLOGY INCORPORATED

792300

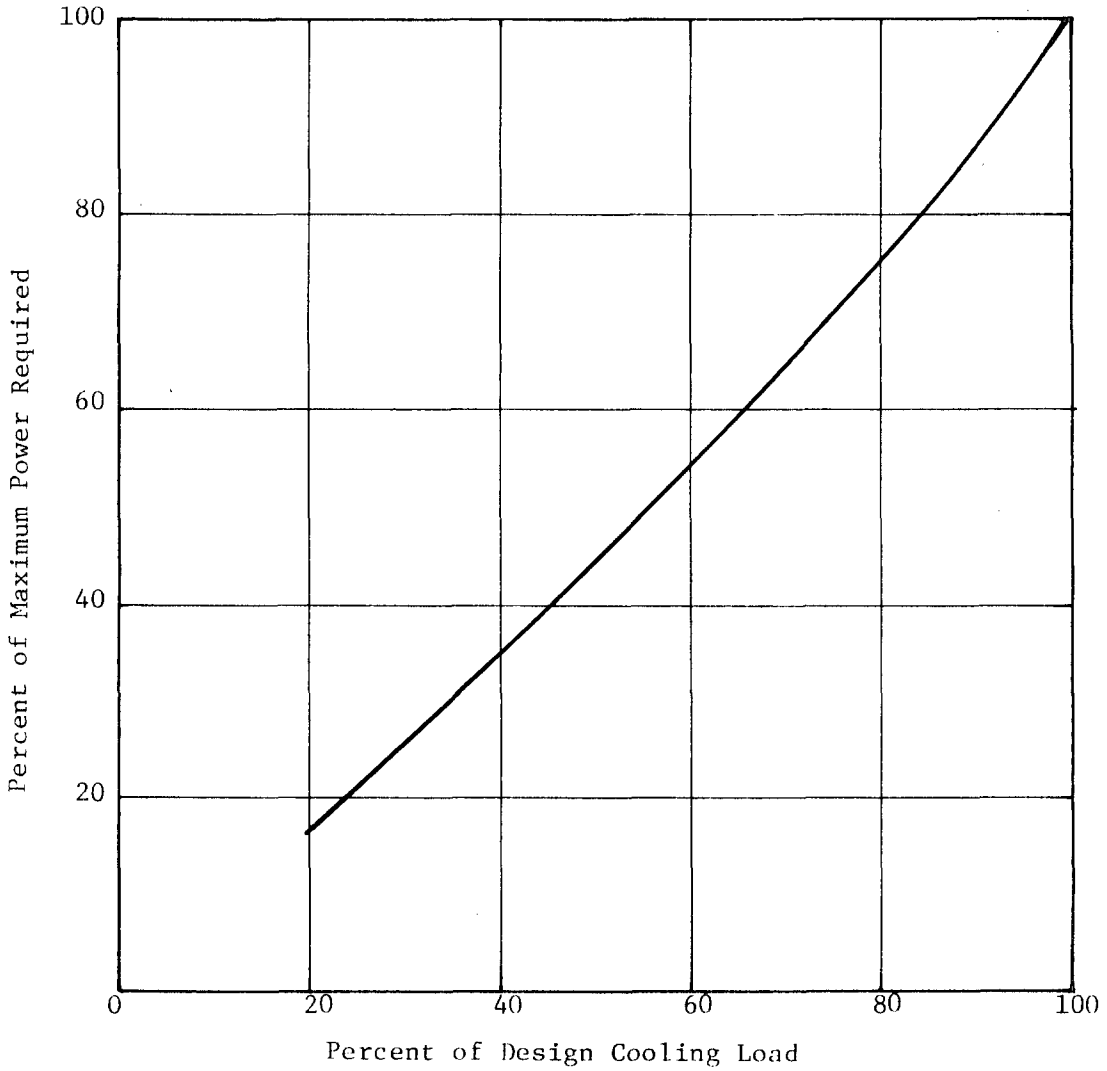

Fig. 3.2-2 Part-Load Chiller Performance Showing How the Compressor Responds to Part-Load Conditions of the System

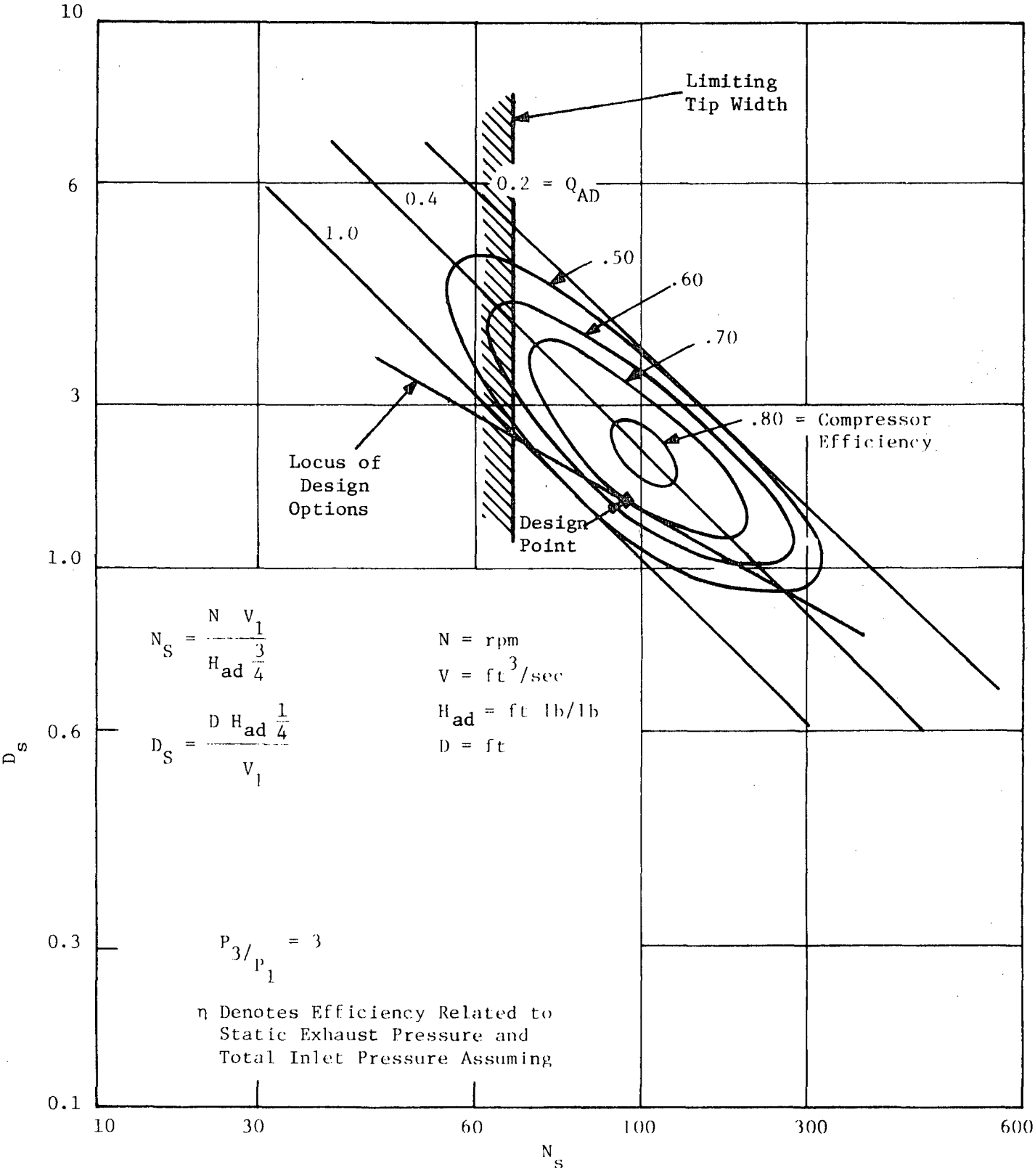

Fig. 3.2-3 Specific Speed (N_s), Specific Diameter (D_S) Relationship for Centrifugal Compressor

792028

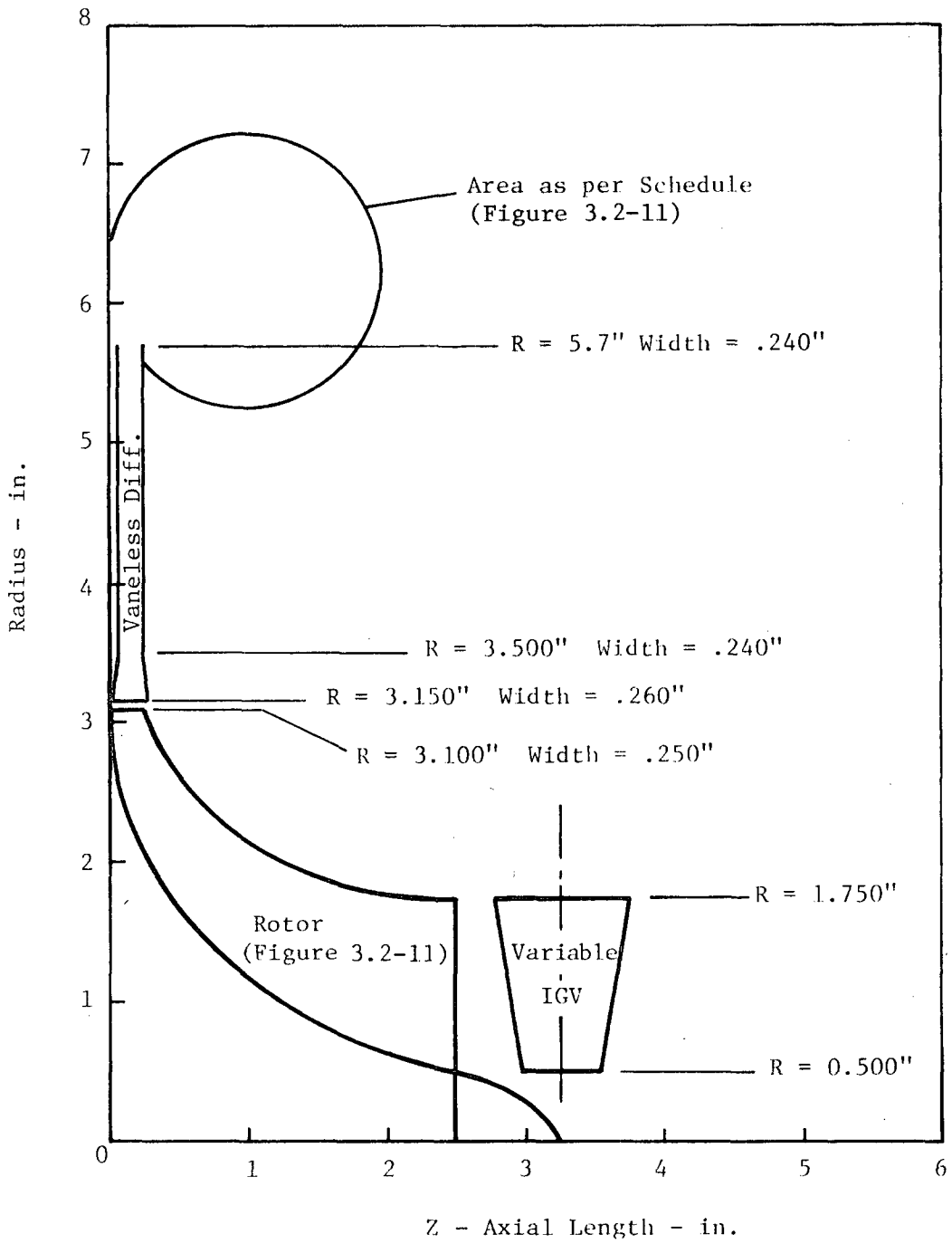

Fig. 3.2-4 CNG Compressor Flow Path R-12; N = 24,049 rpm

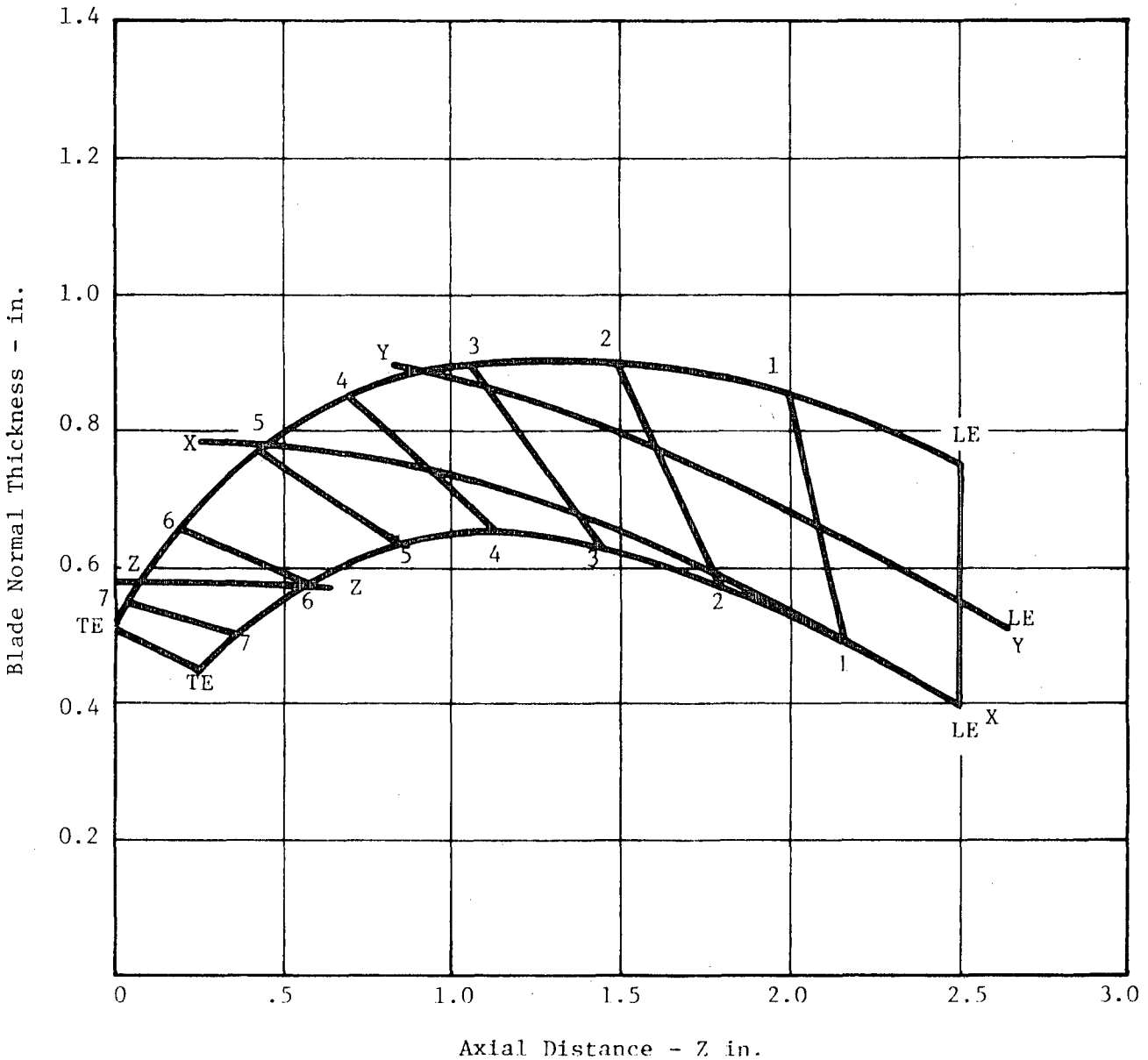

Fig. 3.2-5 CNG Compressor Blade Thickness

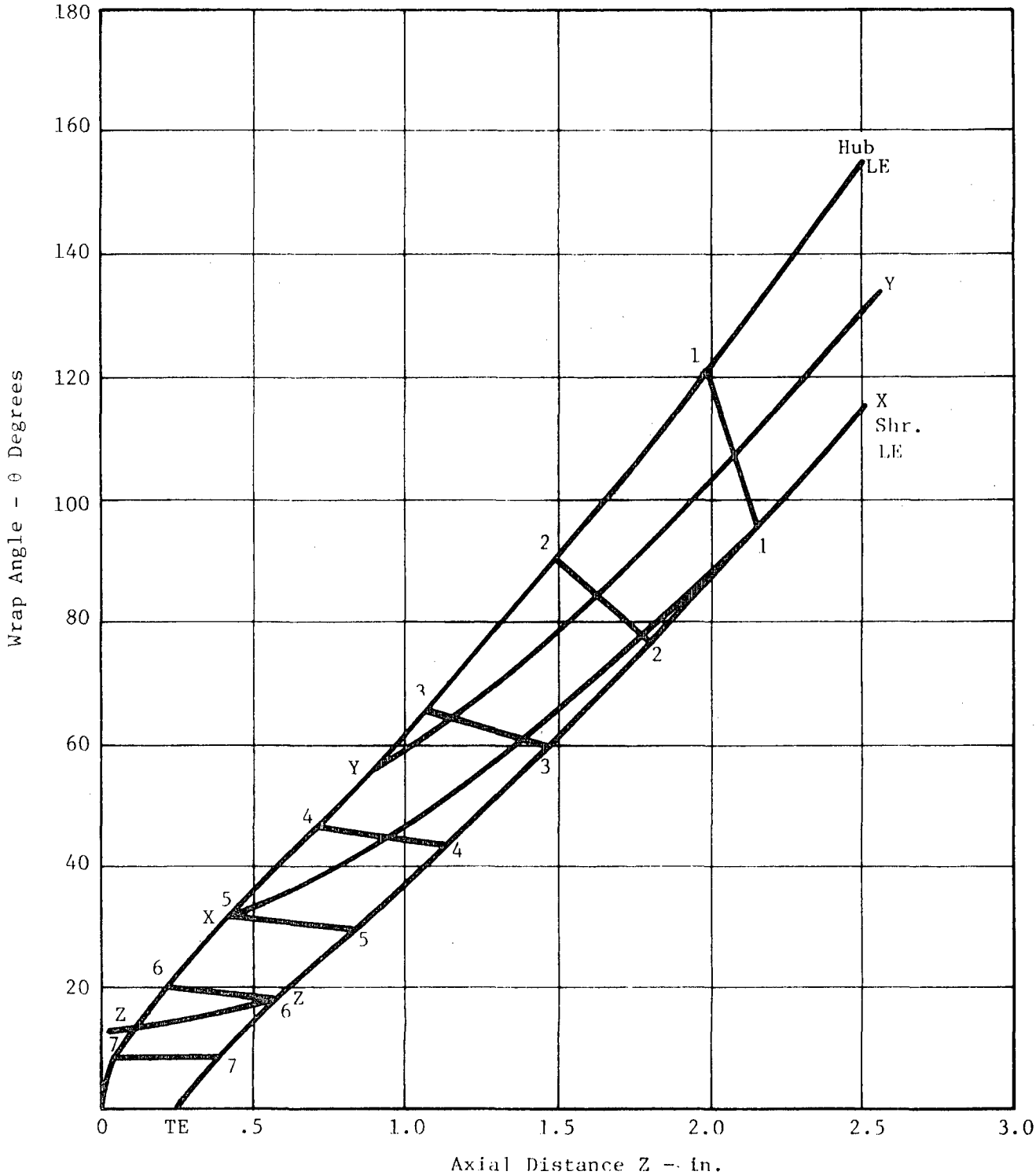

Fig. 3.2-6 Blade Wrap Angle - θ

MECHANICAL TECHNOLOGY INCORPORATED

792290

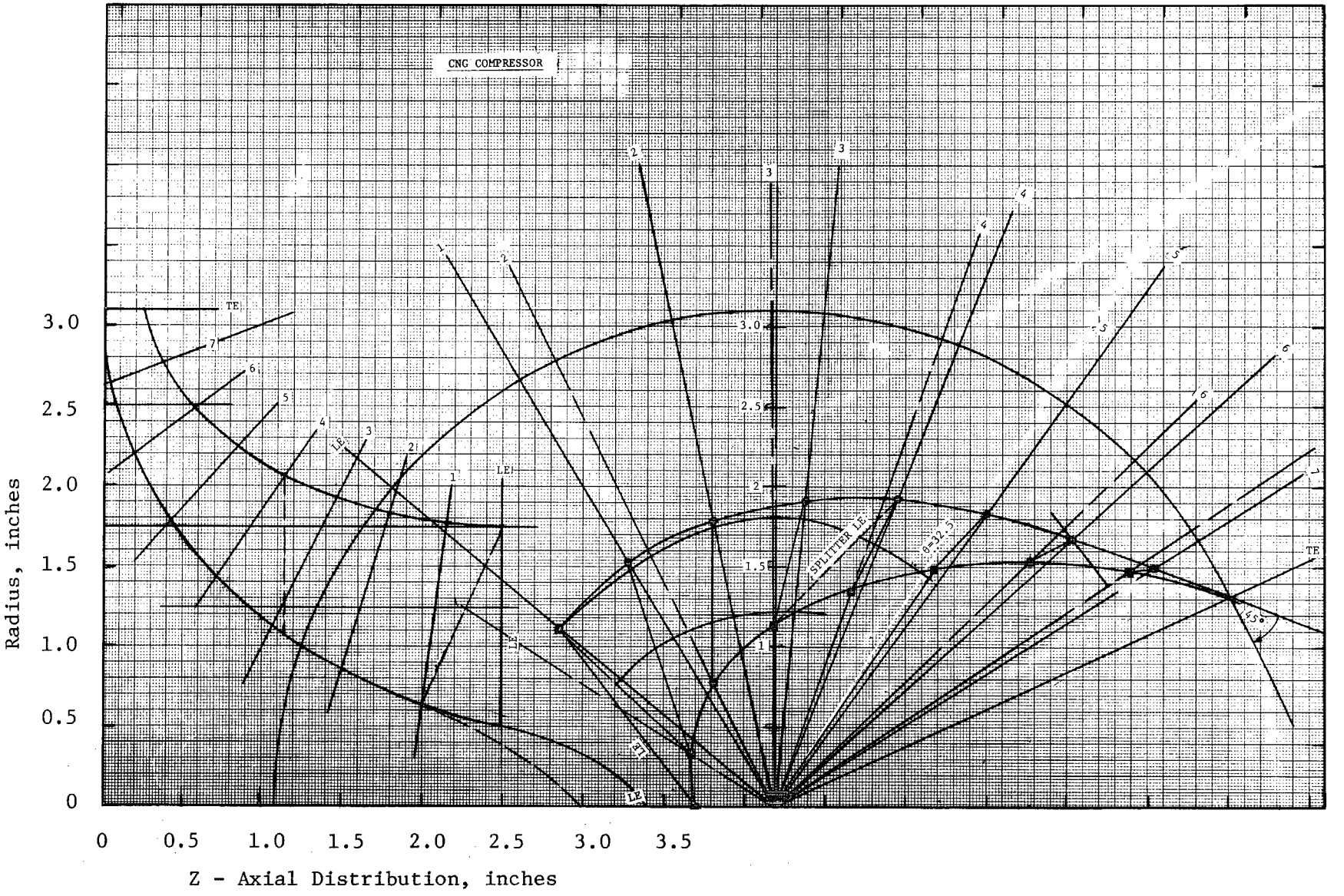

Fig. 3.2-7 CNG Compressor Rotor Design

MECHANICAL TECHNOLOGY INCORPORATED

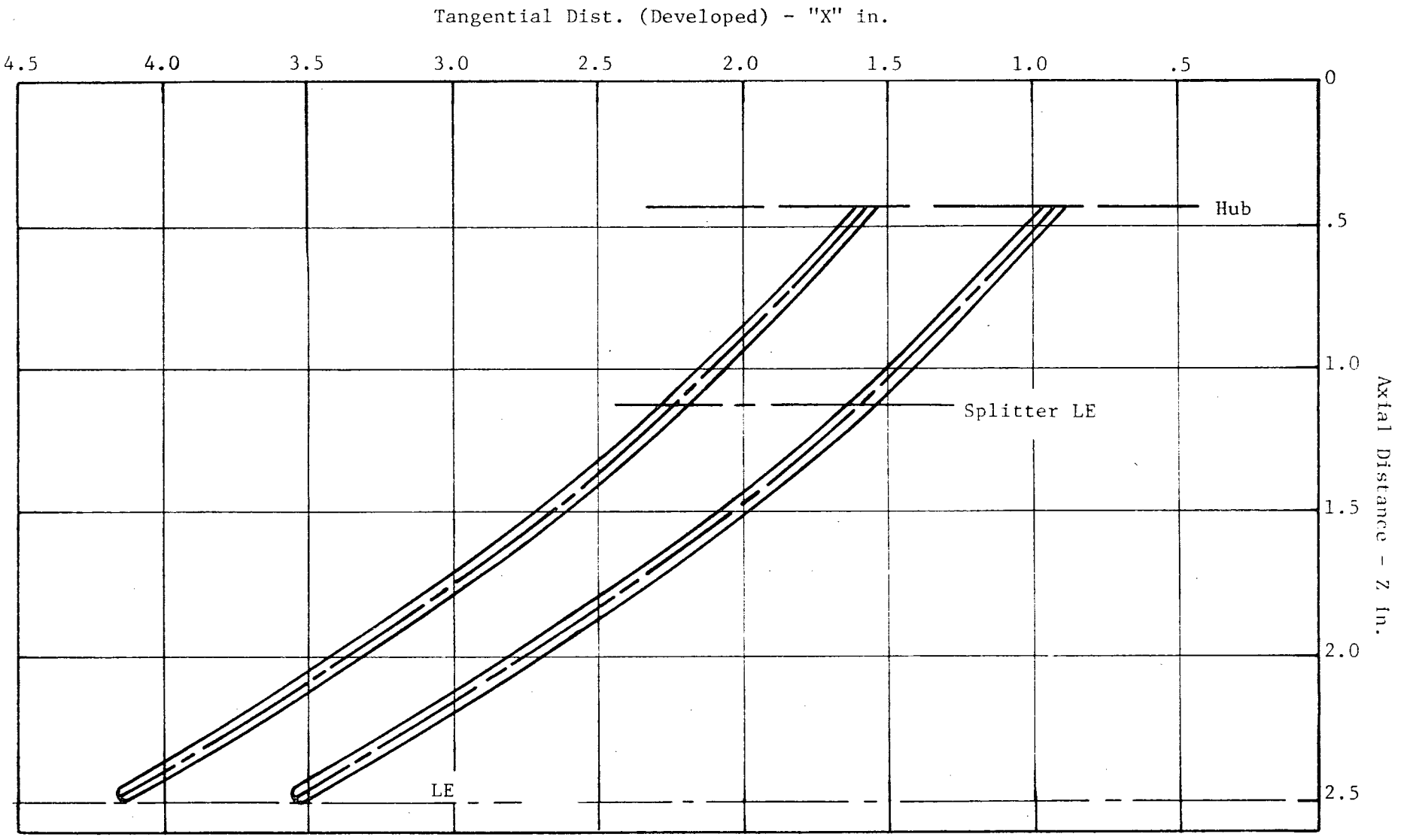

Fig. 3.2-8 CNG Compressor Rotor Blade Section X-X

MECHANICAL TECHNOLOGY INCORPORATED

792326

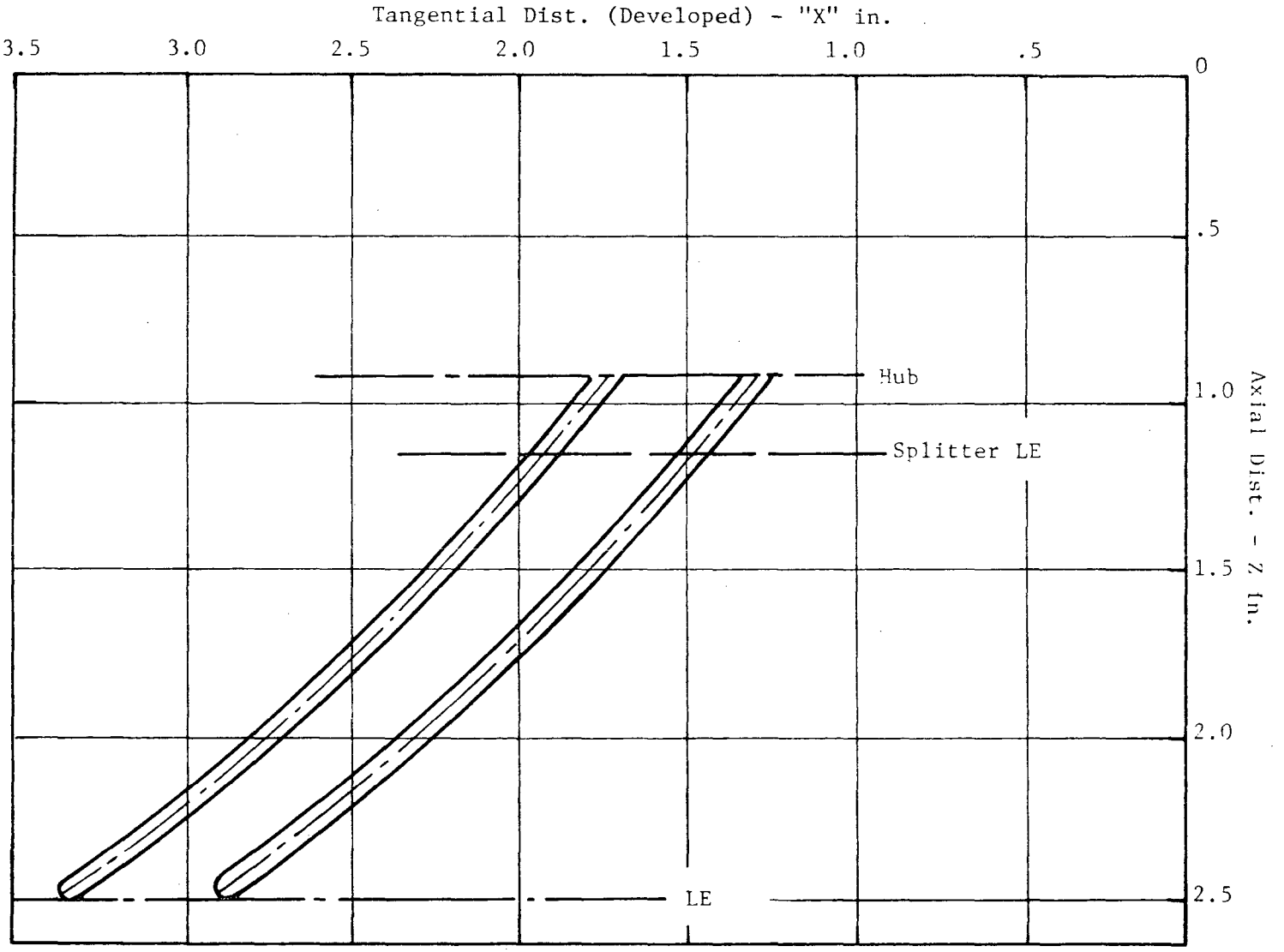

Fig. 3.2-9 CNG Compressor Rotor Blade Section Y-Y

792256-1

MECHANICAL TECHNOLOGY INCORPORATED

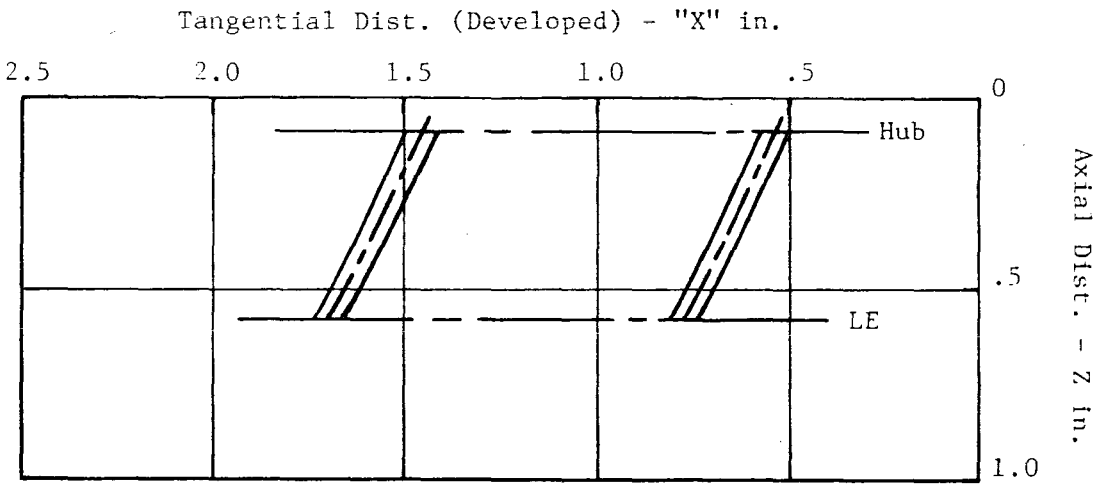

Fig. 3.2-10 CNG Compressor Rotor Blade Section Z-Z

792298-1

MECHANICAL TECHNOLOGY INCORPORATED

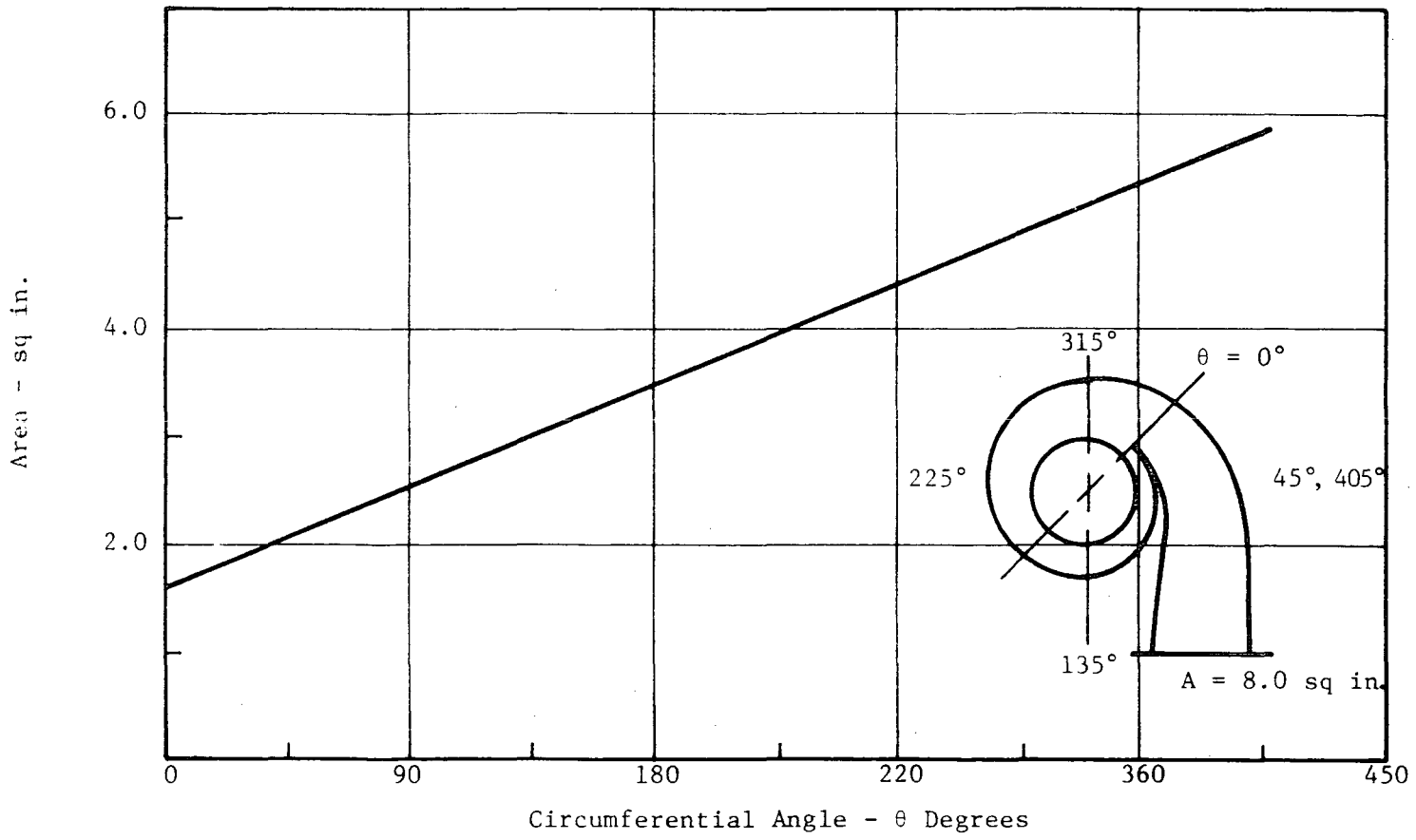

Fig. 3.2-11 CNG Compressor R-12 Exit Scroll Area Schedule

MECHANICAL TECHNOLOGY INCORPORATED

792295

TABLE 3.2-2

COMPRESSOR IMPELLER FLOW PATH GEOMETRY

Shroud Profile

STA	R	Z	ψ	θ	t_m	β
LE	1.750	2.500	0.0	115.1	.040	60.0
1	1.773	2.160	7.5	95.8	.049	59.0
2	1.835	1.800	16.5	76.3	.057	57.8
3	1.932	1.470	27.0	59.2	.063	55.6
4	2.075	1.140	34.0	43.2	.065	54.5
5	2.252	.850	42.0	29.7	.064	52.8
6	2.490	.580	53.5	17.7	.058	50.0
7	2.780	.370	69.0	7.9	.050	47.5
TE	3.100	.250	90.0	0.0	.045	45.0

Hub Profile

STA	R	Z	ψ	θ	t_m	β
LE	.500	2.500	0.0	154.8	.075	30.0
1	.626	2.000	7.5	121.7	.086	34.0
2	.839	1.500	16.5	90.1	.090	39.0
3	1.110	1.070	27.0	65.3	.089	42.0
4	1.430	.710	34.0	46.1	.085	43.9
5	1.776	.430	42.0	31.5	.077	44.7
6	2.215	.190	53.5	19.0	.066	45.0
7	2.709	.040	69.0	8.7	.055	45.0
TE	3.100	.000	90.0	0.0	.050	45.0

TABLE 3.2-3

COMPRESSOR DESIGN PARAMETERS

Working Fluid	R-12
Cooling Capacity	125 tons
Evaporator Temperature (saturation)	30°F
Condenser Temperature (saturation)	105°F
Mass Flow	8.66 lb/sec
Power Required	148.6 hp
Rotor Speed	24,049 rpm
Specific Speed	87.9
Specific Diameter	1.7
Estimated Compressor Efficiency	.785
Inlet $M\sqrt{T}/P$	4.4428
Pressure Ratio R	3.2736
$N/\sqrt{T}$	1086.4
Rotor Tip Diameter	6.2 in.
Inducer Tip Diameter	3.5 in.
Inducer Hub Diameter	1.0 in.
Rotor Tip Width	.250 in.
Diffuser Inlet Diameter	7.0 in.
Diffuser Exit Diameter	11.4 in.
Diffuser Width	.240 in.
Scroll Area at Exit	8.0 sq in.

concept facilitated manufacturing, shop testing prior to system assembly, and field maintenance. The layout of the compressor module is shown in Drawing 5 while Drawing 4 shows how the compressor related to the other rotating machinery.

3.2.5 Compressor Control

The compressor capacity was controlled by inlet guide vanes as presented in Figure 3.2-1, with the mechanical details including the actuator, in Drawing 5. The inlet guide vanes were controlled from the chilled water temperature leaving the evaporator. The water temperature rose when the cooling load increased. This temperature increase was sensed and the inlet guide vanes were moved, thus increasing the compressor flow (cooling effect) and causing the water temperature to return to the 44°F control point. The control loop is shown in Drawing 2.

Unstable operating conditions, commonly called surge, could have occurred with centrifugal compressors when operated under extreme conditions. These operating conditions had to be avoided to ensure long trouble-free operation. Low flow combined with a high pressure ratio were the operating conditions which resulted in surge (see Figure 3.2-1); these conditions could have caused potential mechanical damage.

Antisurge control had been included in the design for reliability consideration. Two commonly used methods of control were considered: recycle control and shutdown (on-off) control. The first method was commonly used in process applications where continuous flow was required. It was by far the most expensive control method, requiring complex pressure ratio and flow sensors plus a bypass loop with its own flow control valve and heat exchanger. The simpler, more economical, shutdown control was selected for this application. It consisted of a bleed orifice, a small volume chamber, a differential pressure switch and a timing relay. It worked on the principle of sensing rapid changes in compressor discharge pressure, which occurred during surge, and shut down the compressor by disengaging its drive clutch. After a predetermined amount of time elapsed, (measured by a timing relay), the compressor drive clutch reengaged, restarting the compressor. During the shutdown, the building's cooling load increased, and when the compressor returned to operation, it again operated

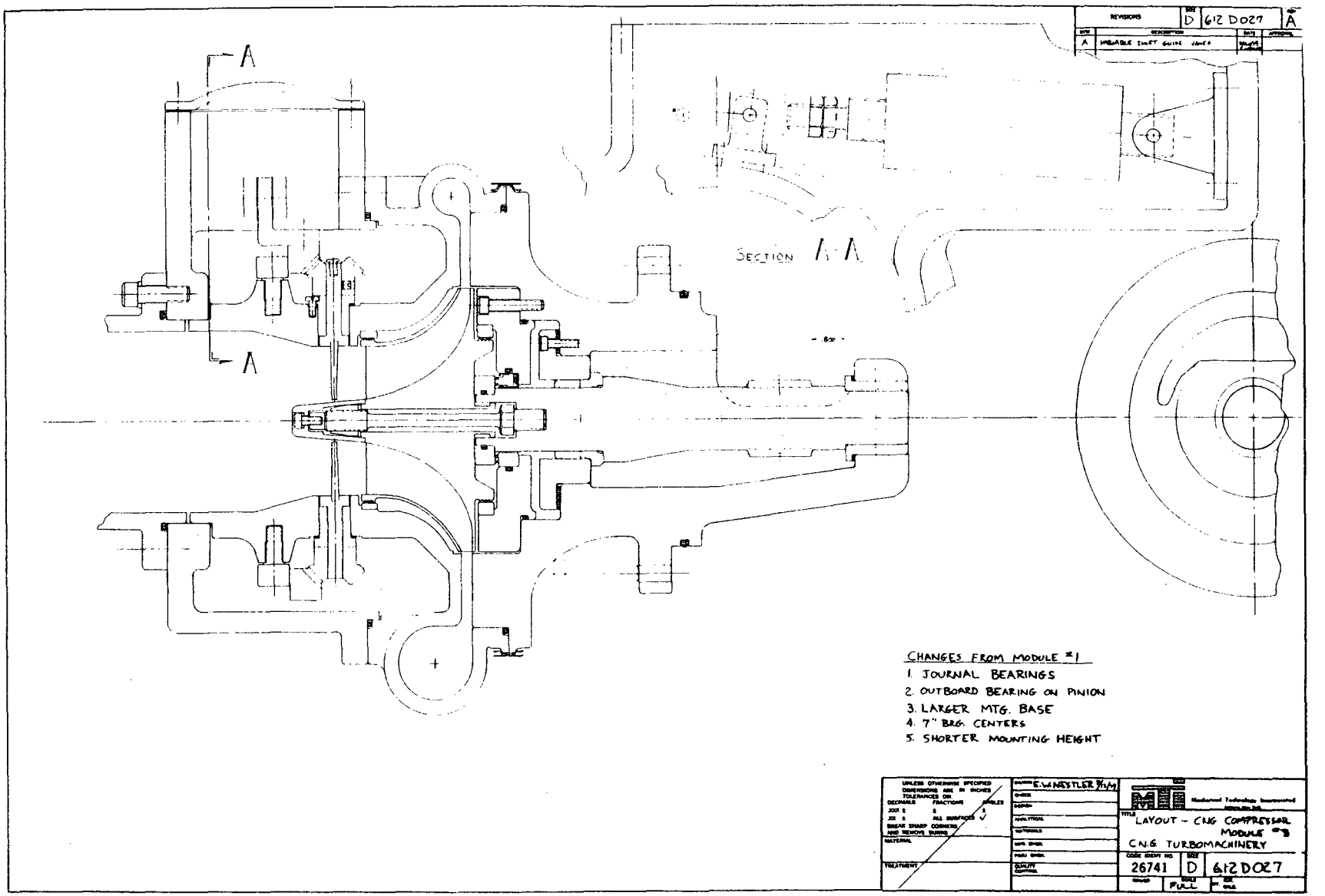

80074

Drawing 5

in the stable region. The compressor start/stop cycling, under extreme operating conditions only, was easily accomodated by its drivers, motor and turbine, as they continued to operate in the base-loaded control mode even when the compressor was shut down. The start/stop mode had a far greater impact on the conventional electric-motor-driven chiller where the number of starts per hour had a significant impact on motor life.

3.2.6 Bearings and Seals

Alternative bearings and seals were considered as well as their arrangements, cost and parasitic losses, to arrive at a near optimum configuration as presented on Drawings 4 and 5. The sealing conditions 24,000 rpm (195 ft/sec) and 126 psid fell well within the state-of-the-art of low-priced shaft seals. The seal which was selected cost $400 and was capable of meeting the sealing requirements. Other sealing alternatives were considered such as for the 3600 rpm drive gear shaft, an even easier sealing task. However, that design required two separate lube oil systems - one for the compressor with refrigerant in it and the other for the motor/generator drive train. As a result, this design was ruled out by cost and system reliability considerations. The layout shown in Drawing 5 isolates the Freon-12 from the lube oil system.

The bearings shown on Drawing 5 are pressure dam sleeve bearings with a thrust collar. These bearings offered the best combination of load carrying capability, cost, stability and parasitic losses. The impeller thrust was partially balanced by differential pressures across the impeller balance pistons and the helical gear loads. The net unbalanced thrust was carried by the thrust collar on the bearing adjacent to the impeller.

3.2.7 Drive Train

The compressor was driven through a set of helical gears and a clutch located on the 3600 rpm shaft as presented on Drawing 4. Many alternative clutching and gearing arrangements were considered before this arrangement was selected. The clutch was required in this concept to reduce the parasitic losses while the system was in the heating mode and the compressor was not required. The most desirable arrangement was a high-speed clutch (40,000 rpm) directly connecting the turbine and compressor - eliminating one gear set. However, this

was far beyond the state-of-the-art of friction clutches and presented other problems such as the refrigerant shaft seal.

Planetary gearing and band clutches offered some reduction in overall size for the machinery package. Unfortunately the increased number of parts (gears and bearings), the associated cost and long-term reliability considerations eliminated them from contention.

The drive arrangement shown on Drawing 4 was considered to be the most cost-effective and the most reliable of the mechanical drive arrangements. However, large number of bearings, their potential losses and associated costs provided much of the impetus for a parallel path activity focusing on other turbine/generator/compressor coupling methods which were potentially more cost and performance effective. The results of this study are described in Section 2.3.5.

3.3 Refrigerant Heat Exchangers

The refrigerant condensor and evaporator were subjected to a reiterative design approach which started by finding representative areas and overall heat transfer coefficients using estimated heat loads, water flow rates and temperatures. Later the heat transfer areas were optimized as described in Section 2.3.4. The optimized surface areas were used as the basis for estimating their costs.

3.4 Motor/Generator

3.4.1 Multiple Function

The electric induction motor in the mechanical drive configuration served four functions. It assisted the turbine in driving the centrifugal compressor when the compressor was loaded over about 75 hp. In addition, it converted part of the turbine's mechanical power output into electrical power when the compressor load was less than 75 hp. While accomplishing the above functions the motor/generator controlled the turbine speed to within about ±1-1/2 percent, thus eliminating the governor/throttle valve control system. In addition, the usual frequency synchronizing controls (required at start-up for

engine/generator sets) were eliminated when the motor functioned as the starter for the turbine, see Section 3.5.3.2 for details.

3.4.2 Design

The layout of the 75-hp, 2-pole, 60-Hz, 3-phase induction motor/generator is presented in Drawing 4 along with its relationship to the turbine and compressor. The rotor which was shrunk on and keyed to the drive shaft was supported on reliable, yet inexpensive bronze journal bearings. The rotor and stator were oil-spray-cooled to reduce their cost and size. By spray cooling, the motor frame size was reduced two sizes below that required for a conventional air-cooled motor. A common lube oil supply was used for bearings and the motor cooling, thus eliminating a separate cooling oil system.

3.4.3 Drive Train

The motor/generator coupled to two gear trains. The turbine power output was delivered to the compressor through a 11.11:1 ratio gear set (AGMA Class 12), the motor/generator rotor shaft, mechanical clutch, and a 6.67:1 ratio gear set (AGMA Class 9). The 11.11:1 and 6.67:1 gear sets were helical gears designed for 90 hp and 150 hp, respectively. All the 3600 rpm bearings were the bronze sleeve journal bearings for cost and reliability. The bearings which support both high-speed pinion gears were pocketed journal bearings, for rotor stability considerations. Tilting pad bearings were considered, but rejected because of their higher cost and higher friction losses.

3.5 Steam Expander

3.5.1 Design Alternatives and Optimization

A preliminary evaluation based on generalized axial low-impulse turbine characteristics indicated that the system's optimum steam pressure occurred between 400 and 600 psig while using the maximum practical steam temperature. Subsequent studies were made using 950°F initial and 950°F reheat temperatures. Reheat and regeneration were included to enhance the cycle efficiency.

Initial attempts to consistently estimate the complete steam Rankine system cost showed that the projected maximum system cost would occur in the 400 to

600 psig pressure range, with the steam generator being the major variable. Subsequent discussions with steam generator designers raised questions regarding the accuracy of these initial cost projections. It was indicated in these discussions that the cost could even decrease at higher pressures rather than increase. Consequently, steam generator costs were reevaluated over a broad range of pressures (200 to 800 psig) and temperatures (750 to 1050°F). The results of this study, along with the results of the turbine (steam cycle) performance anlaysis (both discussed in Section 3.6.1.1) indicated that 1050°/1050°F/800 psig steam conditions produced the best cycle performance/equipment cost combination.

3.5.1.1 Multistage Turboexpander. In general, there was an optimum speed for a given turbine size (inlet volumetric flow) and an optimum number of stages for a given adiabatic enthalphy drop, as defined by steam conditions. For example, earlier in the LSM program a preliminary design was developed for a larger 200-hp, 8-stage unit that was divided into a high-pressure and low-pressure section having optimum speeds of 54,000 and 60,000 rpm, respectively. As would be expected, a similar but smaller, 90-hp, 8-stage unit would have optimum speeds of 64,000 rpm for the high-pressure section and 70,000 rpm for the low-pressure section; these speeds were higher than those of the 200-hp turbine. Figure 3.5-1 presents the section efficiency as a function of operating function of operating speed for the 90-hp, 8-stage unit. It must be recognized that the efficiencies shown in Figure 3.5-1 were established purely from a calculated basis including certain assumptions as to rotation losses, bucket widths, packing leakages, shaft diameters and packing lengths. These assumptions would have had to be checked against a final layout that satisfied rotor dynamic requirements and bucket stress criteria. In addition, actual machines would have had a "test correction" to the calculated values, which may have been either plus or minus, depending upon design details and quality of construction.

The 8-stage (8-wheel) turbine represented the most efficient and expensive design approach. Considering that each wheel and nozzle pair would have cost between $700 to $1000, the number of wheels used should have been minimized. A single-wheel two-stage reentry turbine represented the simplest design.

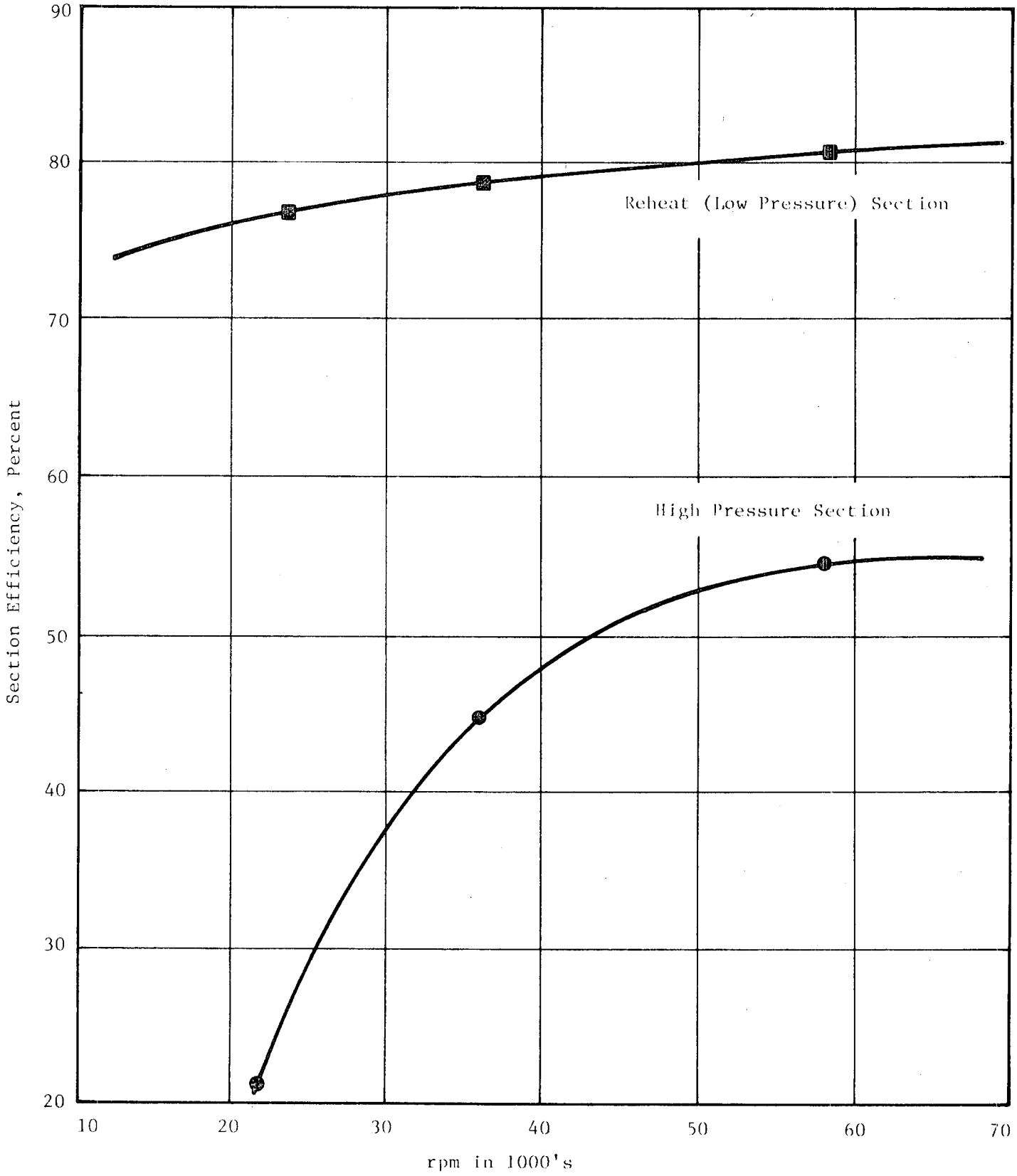

Fig. 3.5-1 Adiabatic Section Efficiencies for an 8-Stage, 90-hp Turbine with Four Single Stages in the High-Pressure Section with the First Stage Being the Governing Stage and Four Single Stages in the Low-Pressure Section Using Reheat

However, this type of turbine would have had relatively poor efficiency. A more efficient concept consisted of a two-wheel (three-stage) turbine in which the high-pressure expansion occurred across a partial arc of the first wheel. After the reheat, the remainder of the wheel was used for the low-pressure expansion. The balance of the low-pressure expansion occurred across the second wheel's entire arc.

The two-wheel (three-stage) concept was optimized using a parametric analysis with an MTI computer program based upon Lindhart and Silverman[1]*. A broad range of process and geometric factors were evaluated as shown in Table 3.5-1. The 40,000 rpm speed was selected as a possible match for the Freon-12 compressor and the 58,000 rpm speed offered the potential of decreasing the size of the turbine while maintaining higher efficiencies.

The results of this screening process indicated that optimum efficiencies at 40,000 rpm would be obtained with a 6-inch first wheel and a 7-inch second wheel at 400 psig; while at 58,000 rpm, a 4-inch first wheel and a 5-inch second wheel appeared best. Tables 3.5-2 through 3.5-5 summarize the results of these studies. The corresponding calculated efficiencies were then used to calculate the overall Rankine cycle performance, for comparison with the 8-stage, 600 psig calculated performance.

Such comparisons must be used with caution. Both sets of efficiencies were made on an analytical basis, but by completely different approaches. In addition, the 2-wheel performance was based on certain clearances which (it is assumed) could be held in practice. Changes in these clearances could significantly affect the efficiency achieved. Valid test corrections were not available for either design.

While the two-wheel turbine with reentry configuration on the first wheel was expected to be a low-cost unit, the efficiency was unacceptable because of the relatively low wheel speed with only two rows of buckets. This judgement was made in terms of the overall thermal efficiency of the cycle. Consideration

---

*Numbers in brackets indicate references at the end of this section.

TABLE 3.5-1

PROCESS AND GEOMETRIC PARAMETERS EVALUATED IN TURBINE OPTIMIZATION STUDY

Inlet Pressure, psig	- 200, 400, 600, 800
Inlet/Reheat Temperature, °F	- 950/950, 1050/1050, 1150/1150
Back (exhaust) Pressure, psia	- 1.17, 1.82, 2.40, 3.57
Wheel Pitch Diameter, in. (wheel #1/wheel #2)	- 3/4, 4/5, 5/6, 6/7, 7/8, 5/5
Turbine Speed, rpm	- 40,000, 58,000

TABLE 3.5-2

RESULTS OF PARAMETRIC STUDY SHOWING KEY TURBINE PERFORMANCE AND SIZING FACTORS FOR STEAM CONDITIONS OF 950°F (INITIAL AND REHEAT)/600 AND 800 PSIG/2.4 PSIA AND AT SPEEDS OF 40,000 AND 58,000 RPM

D_1	D_2	P_1		U/C_o			η_{AD}			Blade Height, in.		
in.	in.	psig	rpm*	St. 1	St. 2	St. 3	St. 1	St. 2	St. 3	St. 1	St. 2	St. 3
3	4	800	40	.14	.15	.25	.314	.385	.580	.12	.23	.55
			58	.20	.22	.36	.416	.509	.699	.12	.23	.55
		600	40	.15	.15	.25	.326	.384	.582	.13	.24	.58
			58	.21	.22	.36	.430	.508	.700	.13	.24	.58
4	5	800	40	.19	.20	.31	.391	.480	.660	.09	.17	.44
			58	.27	.30	.45	.491	.608	.734	.09	.17	.44
		600	40	.19	.20	.31	.405	.480	.662	.10	.18	.47
			58	.28	.30	.45	.504	.608	.733	.10	.18	.47
5	6	800	40	.23	.25	.37	.446	.558	.712	.07	.14	.37
			58	.34	.37	.54	.510	.667	.706	.07	.14	.37
		600	40	.24	.25	.38	.460	.557	.713	.08	.14	.39
			58	.35	.37	.55	.519	.667	.703	.08	.14	.39
6	7	800	40	.28	.31	.44	.470	.616	.734	.06	.12	.32
			58	.41	.44	.63	.446	.681	.611	.06	.12	.32
		600	40	.29	.31	.44	.483	.615	.735	.06	.12	.33
			58	.42	.44	.64	.448	.682	.606	.06	.12	.33
7	8	800	40	.33	.36	.50	.451	.651	.723	.05	.10	.28
			58	.47	.52	.72	.259	.642	.417	.05	.10	.28
		600	40	.34	.36	.50	.461	.652	.725	.06	.10	.29
			58	.49	.52	.73	.250	.645	.436	.06	.10	.29

*Multiply by 1000

TABLE 3.5-3

RESULTS OF PARAMETRIC STUDY SHOWING KEY TURBINE PERFORMANCE AND SIZING FACTORS FOR 40,000 RPM, 800 PSIG/2.4 PSIA AND AT TEMPERATURES OF 950, 1050 AND 1150°F AND WITH 5, 6, 7 AND 8 INCH DIAMETER WHEELS

T_1, T_{REH} °F	D_1 in.	D_2 in.	P_1 psig	rpm*	U/C_o St. 1	U/C_o St. 2	U/C_o St. 3	η_{AD} St. 1	η_{AD} St. 2	η_{AD} St. 3	Blade Height, in. St. 1	Blade Height, in. St. 2	Blade Height, in. St. 3
1050	5	6	800	40	.23	.25	.36	.445	.544	.703	.07	.14	.36
↓	6	7	↓	↓	.28	.29	42	.468	.604	.731	.05	.11	.31
↓	7	8	↓	↓	.33	.34	.48	.445	.643	.731	.05	.10	.27
1150	5	6	↓	↓	.23	.24	.34	.444	.530	.691	.06	.13	.35
↓	6	7	↓	↓	.28	.28	.40	.464	.591	.725	.05	.11	.30
↓	7	8	↓	↓	.33	.33	.46	.437	.633	.733	.04	.10	.26
950	5	6	↓	↓	.23	.25	.37	.446	.558	.712	.07	.14	.37
↓	6	7	↓	↓	.28	.31	.44	.470	.616	.734	.06	.12	.32
↓	7	8	↓	↓	.33	.36	.50	.451	.651	.723	.05	.10	.28

*Multiply by 1000

TABLE 3.5-4

RESULTS OF PARAMETRIC STUDY SHOWING KEY TURBINE PERFORMANCE AND SIZING FACTORS FOR STEAM CONDITIONS OF 950°F (INITIAL AND REHEAT)/PRESSURES OF 200 AND 400 PSIG/2.4 PSIA AND AT SPEEDS OF 40,000 AND 58,000 RPM

D_1	D_2	P_1		U/C_o			η_{AD}			Blade Height, in.		
in.	in.	psig	rpm*	St. 1	St. 2	St. 3	St. 1	St. 2	St. 3	St. 1	St. 2	St. 3
5	6	200	40	.3	.26	.38	.517	.565	.714	.14	.16	.42
			58	.43	.38	.55	.541	.672	.702	.14	.16	.42
		400	40	.26	.25	.39	.477	.553	.719	.08	.14	.39
			58	.38	.37	.56	.522	.664	.690	.08	.14	.39
4	5	200	40	.24	.21	.31	.463	.487	.663	.17	.20	.50
			58	.34	.30	.46	.549	.615	.732	.17	.20	.50
		400	40	.21	.20	.32	.424	.476	.671	.10	.17	.47
			58	.30	.29	.47	.579	.604	.732	.10	.17	.47
3	4	200	40	.18	.16	.25	.378	.391	.583	.23	.26	.63
			58	.26	.23	.36	.484	.516	.700	.23	.26	.63
		400	40	.16	.15	.26	.344	.380	.593	.14	.23	.58
			58	.23	.22	.37	.449	.504	.707	.14	.23	.58
6	7	200	40	.35	.31	.44	.531	.622	.735	.12	.12	.36
			58	.51	.45	.64	.433	.683	.604	.12	.13	.36
		400	40	.31	.30	.45	.444	.612	.735	.07	.11	.33
			58	.45	.44	.66	.427	.680	.577	.07	.11	.33
5	5	200	40	.30	.26	.31	.517	.565	.663	.14	.16	.50
			58	.43	.38	.46	.541	.672	.732	.14	.16	.50
		400	40	.26	.25	.32	.477	.553	.671	.08	.14	.47
			58	.38	.37	.47	.522	.664	.732	.08	.14	.47

*Multiply by 1000

TABLE 3.5-5

RESULTS OF PARAMETRIC STUDY SHOWING KEY TURBINE PERFORMANCE, SIZING FACTORS AND STEAM FLOW RATES FOR SIX- AND SEVEN-INCH DIAMETER WHEELS, WITH 950, 1050 AND 1150°F/800 PSIG STEAM AND WITH VARIOUS BACK PRESSURES

T_1 °F	T_{REH}	D_1 in.	D_2 in.	P_1 psig	P_2 psia	U/C_o St. 1	U/C_o St. 2	U/C_o St. 3	η_{AD} St. 1	η_{AD} St. 2	η_{AD} St. 3	Blade Height, in. St. 1	Blade Height, in. St. 2	Blade Height, in. St. 3	Flow Rate lb/sec
1050		6	7	800	1.173	.28	.29	.36	.462	.603	.703	.05	.10	.45	.136
					1.818	.28	.24	.39	.465	.603	.722	.05	.11	.36	.143
					2.4	.28	.29	.42	.468	.604	.731	.05	.11	.31	.149
					3.57	.28	.29	.49	.472	.604	.728	.06	.12	.29	.162
1150		6	7	800	1.173	.28	.28	.34	.458	.590	.690	.05	.10	.43	.127
					1.818	.28	.28	.38	.462	.591	.715	.05	.11	.35	.136
					2.4	.28	.28	.40	.469	.591	.725	.05	.11	.30	.141
					3.57	.28	.28	.45	.468	.591	.734	.06	.12	.26	.151
950		6	7	800	1.173	.28	.31	.37	.465	.615	.712	.05	.11	.46	.143
					1.818	.28	.31	.41	.469	.615	.730	.06	.11	.37	.152
					2.4	.28	.31	.44	.470	.616	.734	.06	.12	.32	.157
					3.57	.28	.31	.51	.474	.616	.721	.06	.13	.29	.170

was therefore given to making the first wheel a 2-row, or "Curtis" stage, still retaining the reentry arrangement for the first two expansions.

The addition of a second row of moving buckets and the stationary intermediates to the first wheel, in a velocity compounded arrangement, effected a substantial increase in the efficiency of the two expansions. The efficiency was attained without undue complication or increase in cost of the design. The second wheel, which because of somewhat lower energy and a higher volume flow already had an acceptable level of efficiency, was kept as a single-row stage.

An investigation was made of the probable efficiencies that could be realized from a 2-row wheel, at the speed and flow required (40,000 rpm - 475 lb/hr). While there were no direct test data available on a wheel this size, calculations based on velocity diagrams and reasonable assumptions as to the bucket loss coefficients, indicated that very good efficiencies might have been realized with a 5.5-inch diameter wheel at the steam pressures, temperatures and flow considered.

A report [2] was available on a series of Russian tests of a 2-row wheel of similar geometry but slightly larger size, i.e. 10.433-inch diameter. These tests showed that an efficiency of about 61% should be attainable. An adiabatic efficiency of 61% was used on the first two expansions using the 2-row first wheel, and the calculated efficiency of 73.1% was used for the third expansion, on the second wheel. These parameters gave a calculated cycle thermal efficiency, without mechanical losses, of 31.3% at steam conditions of 800 psig-1050°F-2 inch Hg with a regenerator to recover the exhaust superheat in the feed water.

3.5.1.2 Other Types of Expanders. Two other expander types were considered for this application. They included: a rotary positive displacement expander and a radial inflow-turbine. Both types offered less performance potential than the three-stage axial flow turbine which was selected. A cursory analysis of the radial inflow turbine revealed that it was unsuitable for this application because of the high-pressure ration requirements which resulted in low arc of admission and poor performance.

The rotary positive displacement expander was studied in a two-stage configuration. A cross section of its basic geometry is presented in Figure 3.5-2. The results of this study showed that losses from porting, carry-over and leakage were the major deterrents to achieving good expander efficiency. Assuming a zero running clearance to eliminate any leakage losses, the porting and carry-over losses alone resulted in an expander efficiency of 68% for the high-pressure expander. However, the predicted efficiencies rapidly deteriorated as the running clearances increased from the theoretical zero leakage condition. For example, at 0.001 inch the efficiency decreased to 61%; at 0.002 inch 39%; and at 0.004 inch 21%. This concept was abandoned in favor of the three-stage impulse turbine because of its high sensitivity to leakage clearances and the associated critical manufacturing requirements.

3.5.2 Turbine Design

Based on the favorable result from the optimization studies, further design efforts were concentrated on the mechanical layout of the two-row wheel single-stage combination. The first wheel pitch had a diameter of 5.5 inches and the second wheel had a diameter of 7 inches at 40,000 rpm. Further consideration of the 58,000 rpm option was discontinued due to the extremely high bearing losses associated with that speed. The aerodynamic and mechanical designs were developed as described in the following two sections, 3.5.2.1 and 3.5.2.2.

3.5.2.1 Aerodynamics. The turbine stage design points were derived from the optimization studies described in Section 3.5.1.1. The final selection of steam conditions and turbine wheel sizes is summarized in Table 3.5-6 and presented in Figure 3.5-3 in the form of specific speed (N_s) and specific diameter (D_s).

The turbine was a three-stage, two-disc impulse type, the first disc being a partial admission two-rows velocity-compounded (Curtis) wheel with reheat and subsequent reentry after first expansion. The stage data is presented in Table 3.5-7. The details of the Curtis wheel buckets are presented in Figures 3.5-4 through 3.5-6. The design details of the conical reamed nozzles for the first and second stages are given in Table 3.5-7. The second row of the Curtis stages was designed with a small amount of reaction in order to im-

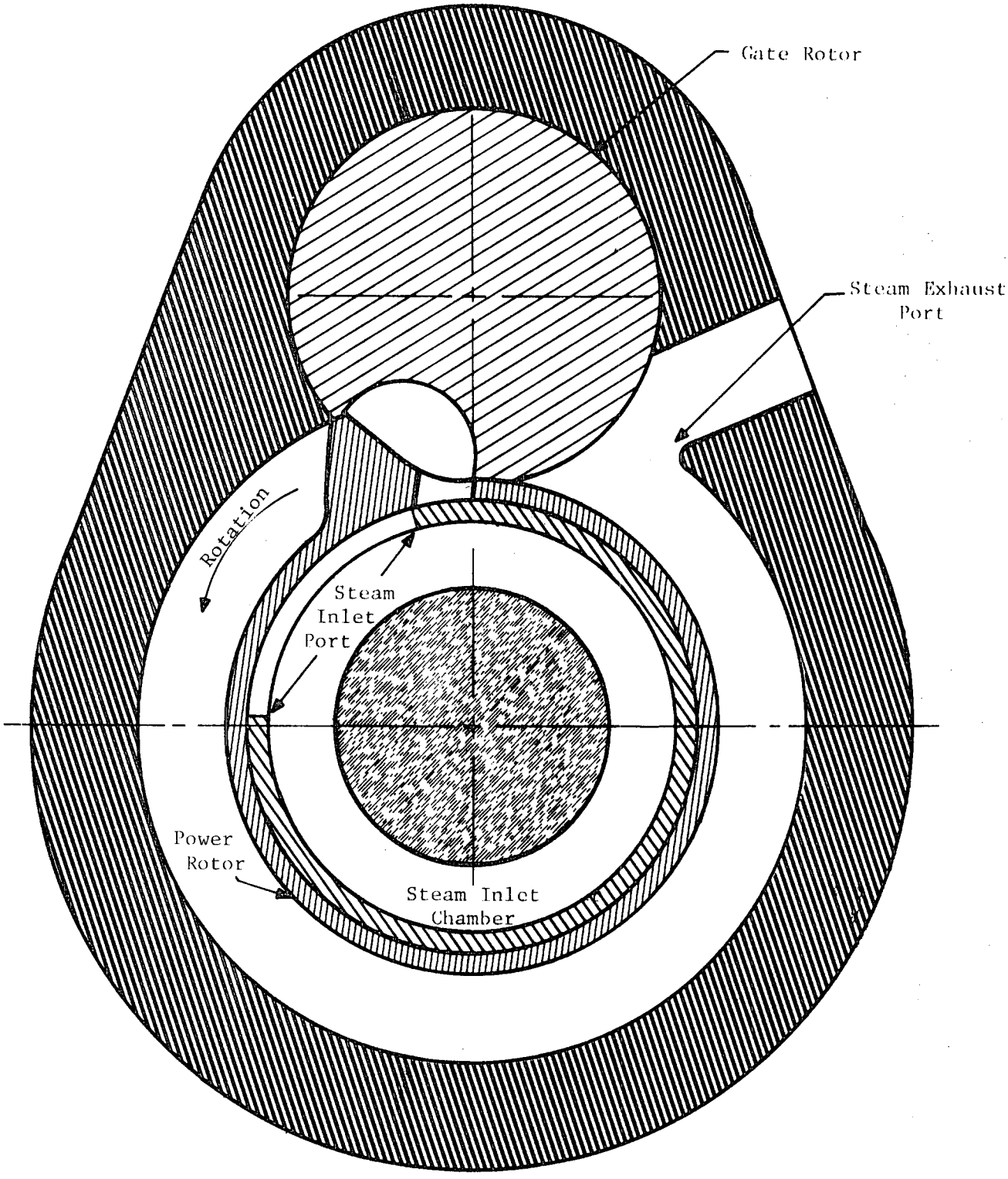

Fig. 3.5-2 Cross Section of Rotary Positive Displacement Steam Expander

TABLE 3.5-6

FINAL SELECTION OF STEAM STATE POINTS AND TURBINE DESIGN PARAMETERS

Working Fluid	Steam
Number of Stages	3
Power Output	90 hp
Inlet Pressure	800 psig
Inlet Temperature	1050°F
Reheat Pressure (after 1st stage)	64 psia
Reheat Temperature	950°F
Turbine Exit Pressure	2.4 psia
Mass Flow	.157 lb/sec
Turbine Speed	40,000 rpm

	Stage 1 (2 Row)	Stage 2 (2 Row)	Stage 3 (1 Row)
Specific Speed	4.7	14.5	35.3
Specific Diameter (in.)	9.2	3.2	1.9
Velocity Ratio U/C_o	.28	.31	.44
Turbine Efficiency	.508	.688	.734
Admission Percent	8.3	52.1	100.0

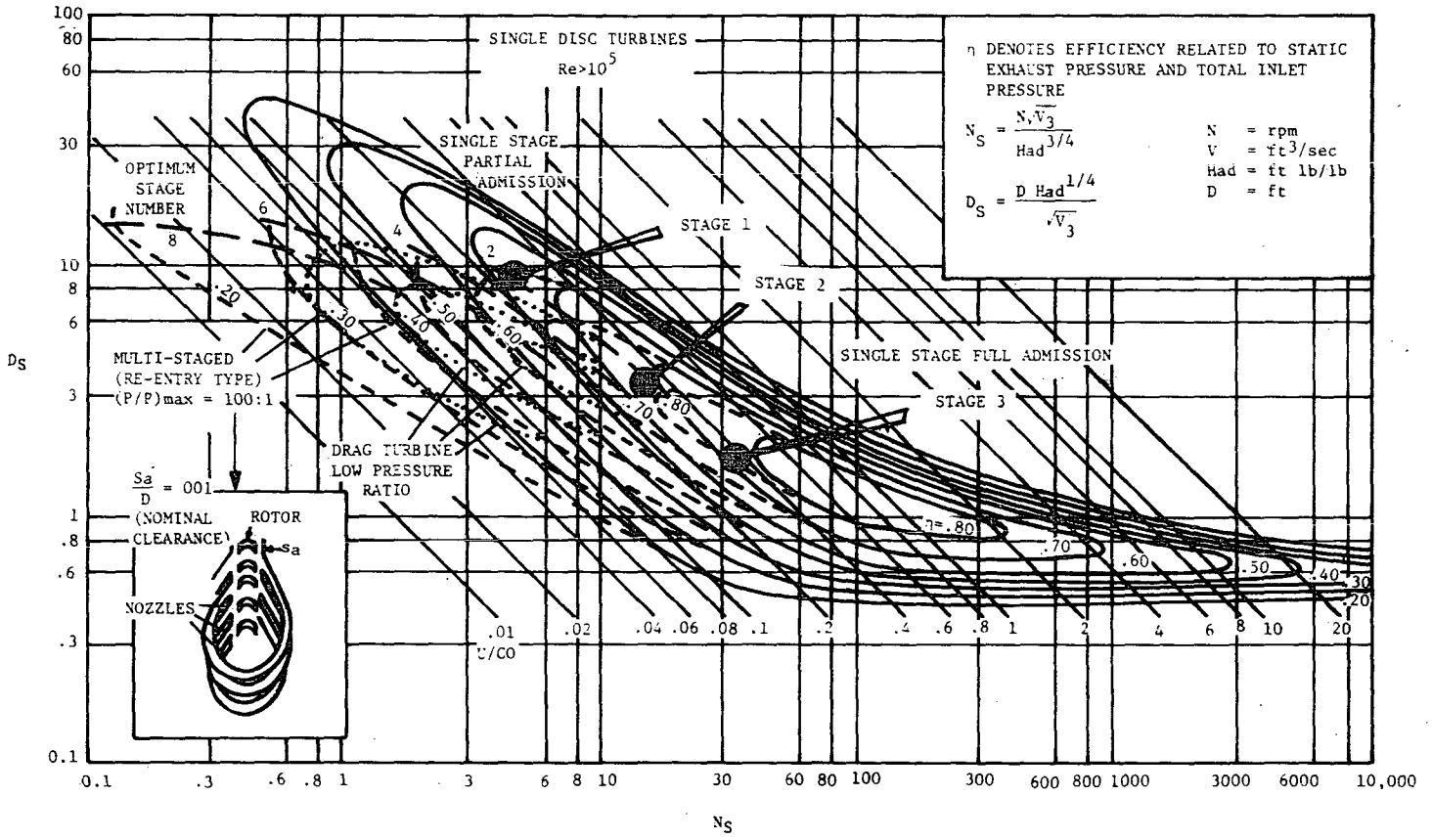

Fig. 3.5-3 Specific Speed (N_S), Specific Diameter (D_S) Relationship for Axial Impulse Turbines (3)

MECHANICAL TECHNOLOGY INCORPORATED

792252

TABLE 3.5-7

TURBINE STAGE DATA

	Wheel #1 (Curtis)				Wheel #2
	Stage 1 (2-Row)		Stage 2 (2-Row)		Stage 3 (1-Row)
Nozzle Type	Conical (Con-01)		Conical (Con-01)		NGV
Admission (%)	8.3		52.1		100.0
No. of Nozzles	4		21		17
Throat Dia. (in.)	.0725		.1024		.2844
Exit Dia. (in.)	.0924		.110		-
Nozzle Angle	15°		15°		15°
	Row-1	Int.		Row-2	
Rotor Blade Height (in.)	.112	.112		.126	.340
Rotor Blade Width (in.)	.250	.250		.250	.250
Blade Angles (inlet/exit)	20°/20°	35°/25°		60°/35°	26°/26°
Rotor Blade Number	122	122		133	176
Blade Pitch Dia. (in.)	5.50	5.50		5.514	7.00

MECHANICAL TECHNOLOGY INCORPORATED

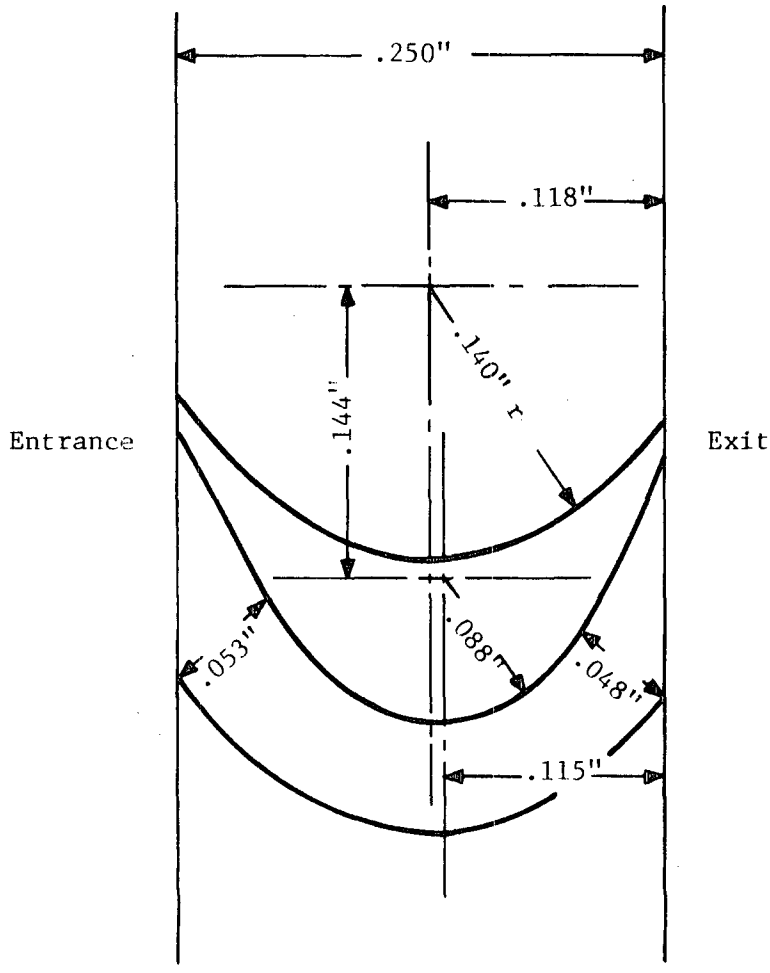

Pitch Diameter = 5.5
No. of Buckets = 122
Bucket Height = .112"
Nominal Angles = 20/20

Fig. 3.5-4 Turbine Bucket Geometry for Curtis Wheel - Row #1

792381

MECHANICAL TECHNOLOGY INCORPORATED

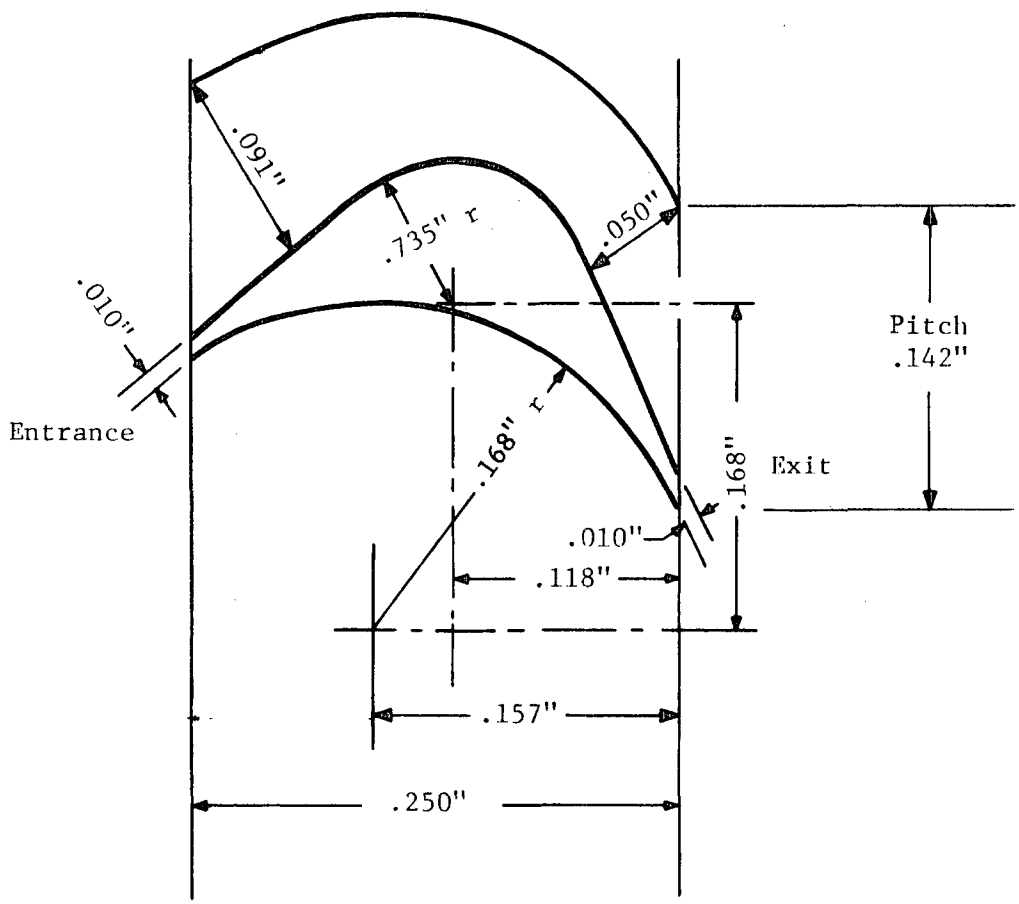

Pitch Diameter = 5.5"
No. of Buckets = 122
Bucket Height = .135"
Nominal Angles = 40/25

Fig. 3.5-5 Turbine Bucket Geometry for Curtis Wheel - Intermediate Row (Stationary)

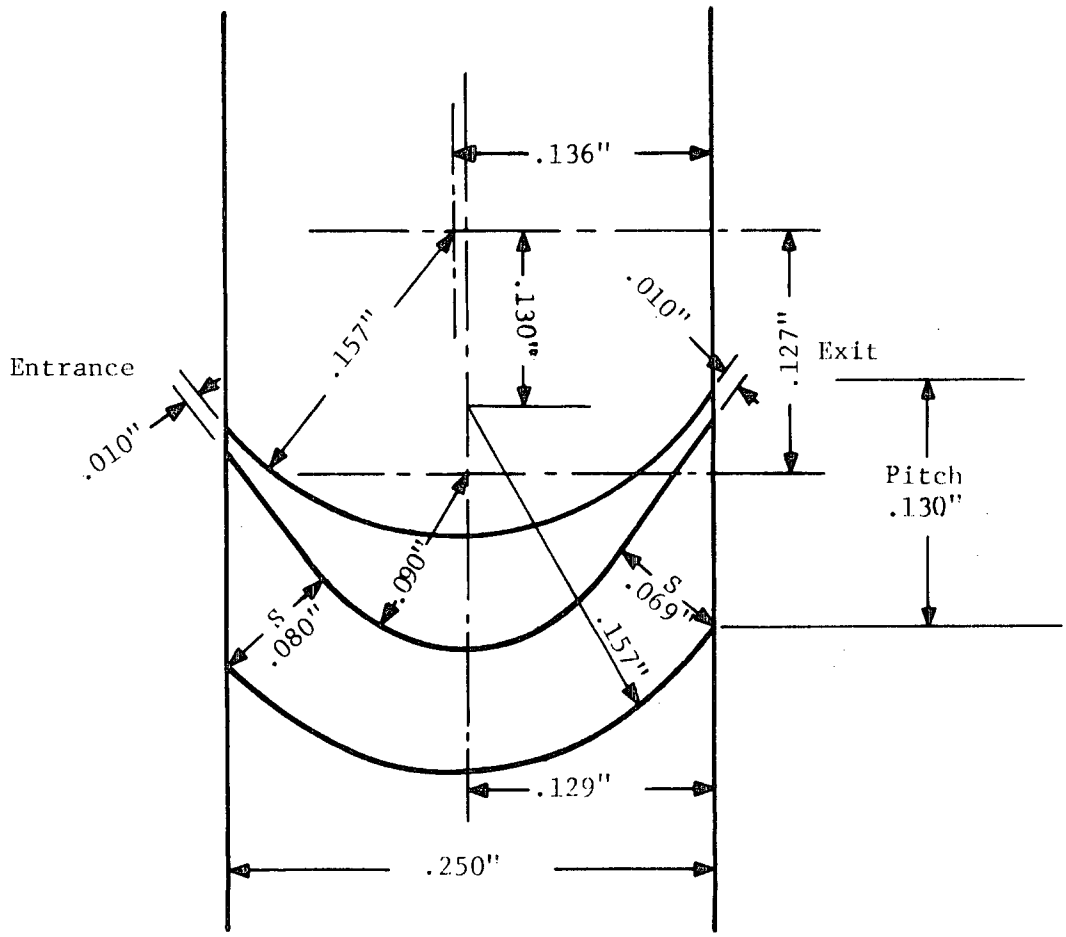

Pitch Diameter = 5.55"
No. of Buckets = 133
Bucket Height = .164"
Nominal Angles = 42/36

Fig. 3.5-6 Turbine Bucket Geometry for Curtis Wheel - Row #2

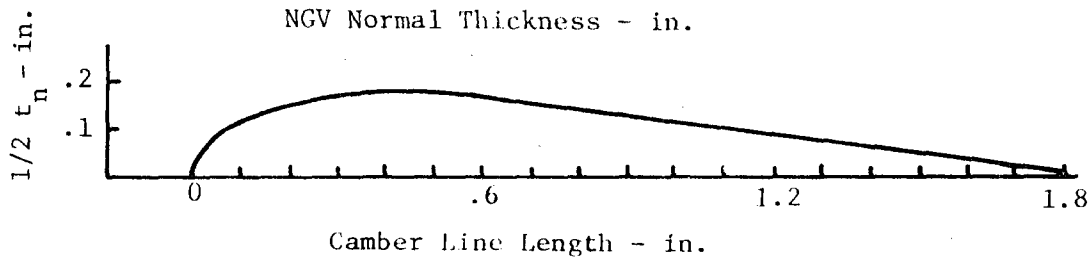

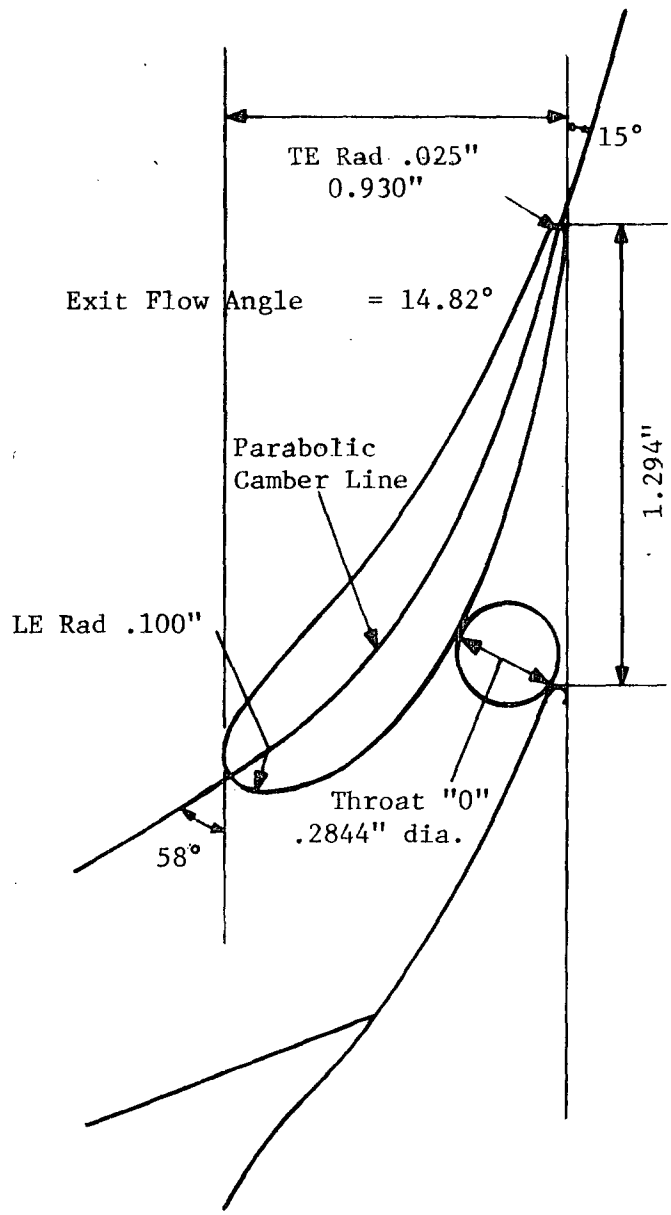

Pitch Diameter = 7"
No. Nozzles = 17
Nozzle Height = 0.340"

Fig. 3.5-7 Turbine Nozzle Geometry for Wheel #2

792302-1

prove efficiency. The nozzle geometry for the second wheel (third-stage expansion) is presented in Figure 3.5-7 followed by the bucket geometry (Figure 3.5-8).

The methods for manufacturing the turbine wheels were considered. Investment costing techniques were considered to be the most cost-effective production method. The final bucket designs described above reflected compromises in shape and performance which were required to achieve a castable design.

3.5.2.2 Mechanical. The cross section of the turbine wheels, seals and casing are presented in Figure 3.5-9. Individual wheels were used for ease of manufacture and were attached to the turbine shaft with a through bolt. The rotating assembly was supported on water-lubricated tilting-pad bearings as shown on Drawing 4. The lubricating water was obtained from the steam condenser hot well.

The assembly was designed as a plug-in module which included a quill shaft and shaft seal assembly. The shaft seal kept the lube oil and water from contaminating each other. The quill shaft design concept permitted the use of a small, inexpensive ($20), shaft seal for this critical application.

The entire turbine subassembly was sandwiched between the gearbox housing and the regenerator. The subassembly could be removed from the system by removing a thin spool piece (not shown) from between the regenerator and the steam condenser. Three steam lines on the turbine and two water connections on the regenerator also had to be removed. The entire subassembly including the quill shaft and seal could then be slid out of the high-speed gearbox. This assembly concept allowed for a limited inspection of the turbine without disturbing any of the critical running clearances.

3.5.3 Control and Operating Considerations

3.5.3.1 Over Speed Protection/Shutdown. The turbine was protected from a destructive over speed condition which could have occurred for several reasons. Some of these reasons were loss of power to the motor/generator, or failure of the quill shaft. Speed was sensed from the turbine shaft. When

A dangerous over speed condition occurred, the main steam trip valve was closed. The balance of the system was also shut down.

The volume of steam trapped between the main trip valve and the third-stage nozzle was minimized as an attempt to eliminate the need for a second trip valve in the reheat return line. The system dynamics were evaluated, verifying that the second valve in the reheat return line was not essential. The steam reservoir between the main steam trip valve and third-stage wheel nozzle was not large enough to over speed the wheel after the main trip valve closed. This concept had a significant impact on reducing system cost by eliminating the second trip valve.

3.5.3.2 Start-Up Procedure. The start-up procedure for the steam Rankine system was also optimized to minimize system control costs. In a conventional system the steam generator and turbine/generator were slowly brought up to operating conditions. This was done by throttling the steam flow to the turbine and dumping a portion of the steam's output directly into the steam condenser, if necessary. After the turbine was warmed up and at operating speed, the generator was synchronized and connected to the grid. Then the output of the steam generator was increased to load the turbine and produce power. This start-up sequence required the following controls: 1) speed governing on the turbine, 2) phase sensing controls for the generator which interfaced with the turbine's speed control, 3) broad turndown capability in the steam generator's gas and air handling system, and 4) a steam bypass piping and a valve to dump excess output directly into the condenser.

The above controls were expensive and had been eliminated from the system by using a modified start-up sequence. The turbine, being small in size, was preheated by means of resistance heating elements, not shown in Drawing 4 or Figure 3.5-9. After the turbine reached a preset temperature, that had to be determined, the steam generator was started at full firing rate. Thirty seconds later the lube-oil and condensate pump started, providing lube oil to the motor/generator/gearbox bearings and water (lubricant) to the turbine shaft bearings respectively. The motor/generator and the feed water pump started simultaneously. The turbine driven by the motor/generator, immediately came up to speed, and the feed water pump delivered water to the steam generator.

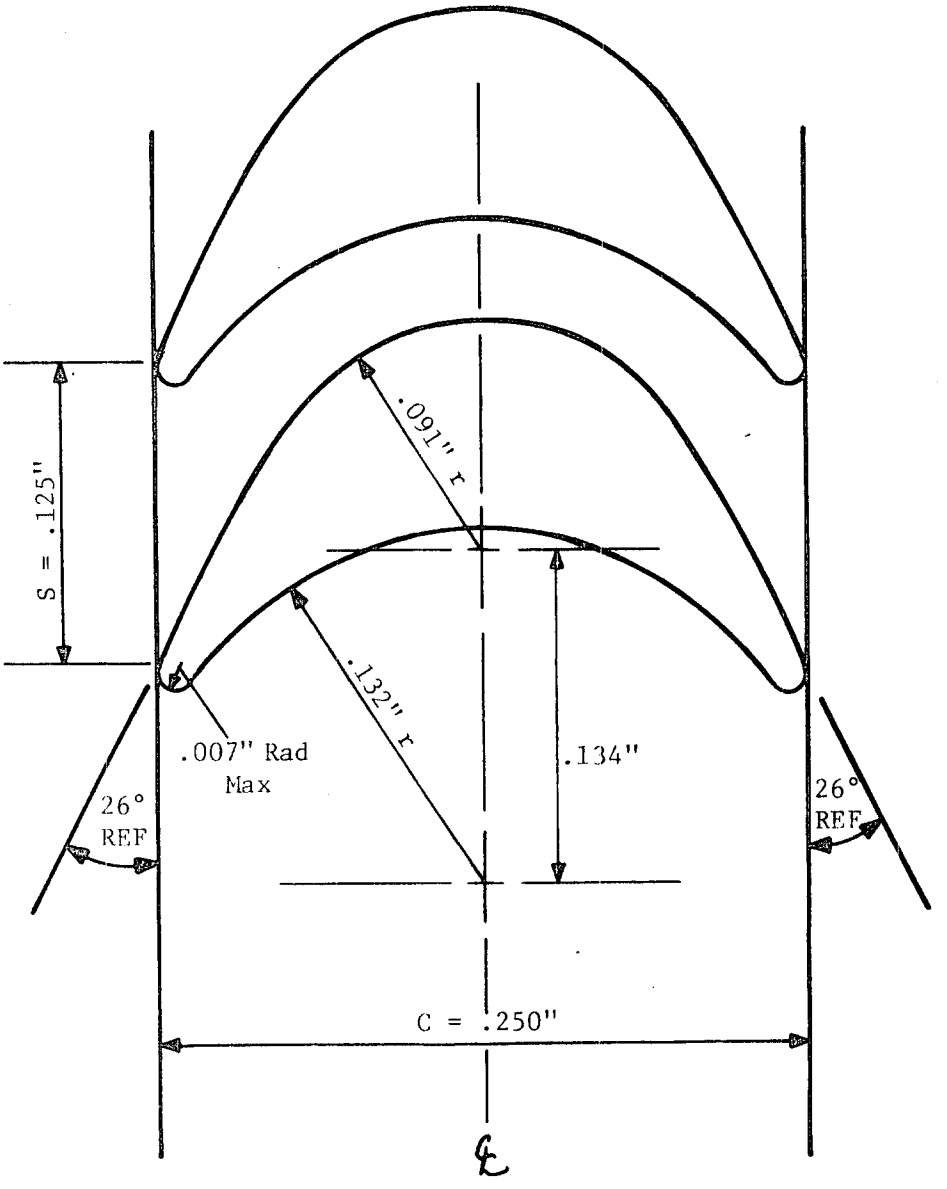

Pitch Diameter = 7"
Blade Height = .340
No. of Blades = 176

Fig. 3.5-8 Turbine Bucket Geometry for Wheel #2

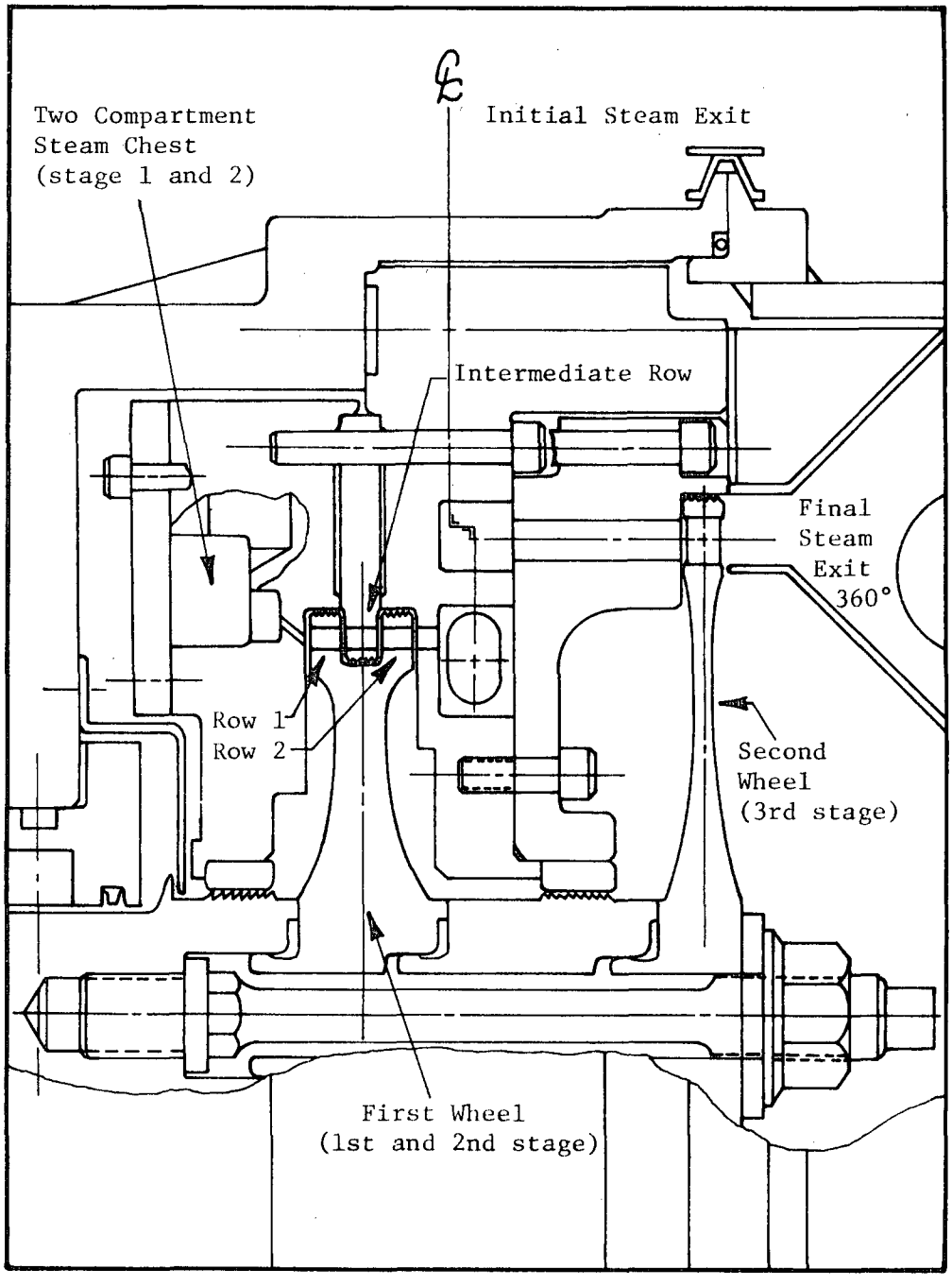

Fig. 3.5-9 Cross Section of Three Stage Turbine

792294

MECHANICAL
TECHNOLOGY
INCORPORATED

The preheated mono-tube steam generator produced steam immediately. The flow restriction of the first-stage turbine nozzles caused the steam pressure to increase to the normal operating level. The resistance-heating heaters in the turbine casing were deenergized and the system operated at full power. The entire start-up procedures, after the turbine preheating was achieved, should have taken less than 45 seconds and should not have required an attending operator.

3.5.4 Performance

The overall turbine performance is given in Figure 3.5-10, which shows basic cycle efficiency plotted against horsepower output, with condenser temperature varying from 100 to 140°F and the turbine supply pressure changing. This performance was derived by assuming a constant Stage-1 and Stage-2 turbine efficiency and varying Stage-3 efficiency as shown in Figure 3.5-11. The changing condensing temperature (pressure ratio) did not affect the first two stages.

3.6 Steam Generator

The steam generator was designed by Advanced Mechanical Technology Incorporated, Newton, Massachusetts in accordance with the process design specifications provided by MTI. Various alternatives were evaluated in order to develop a cost-effective design.

3.6.1 Alternatives Considered

3.6.1.1 Steam State Points. A parametric study was made to establish the most cost effective steam conditions for the system. This study was done by developing a map of steam requirements for a 90-hp steam-turbine driver. The results are presented in Figures 3.6-1 through 3.6-5 and were used to evaluate the tubing cost of the steam generator.

Table 3.6-1 shows the results of the preliminary engineering analysis which covered a matrix of four temperature and pressure levels. At a constant pressure, the tube and fin material costs increased slightly with increasing temperature. At a constant temperature, the costs decreased with increasing steam pressure. The cost of the heat transfer materials was only $87 higher

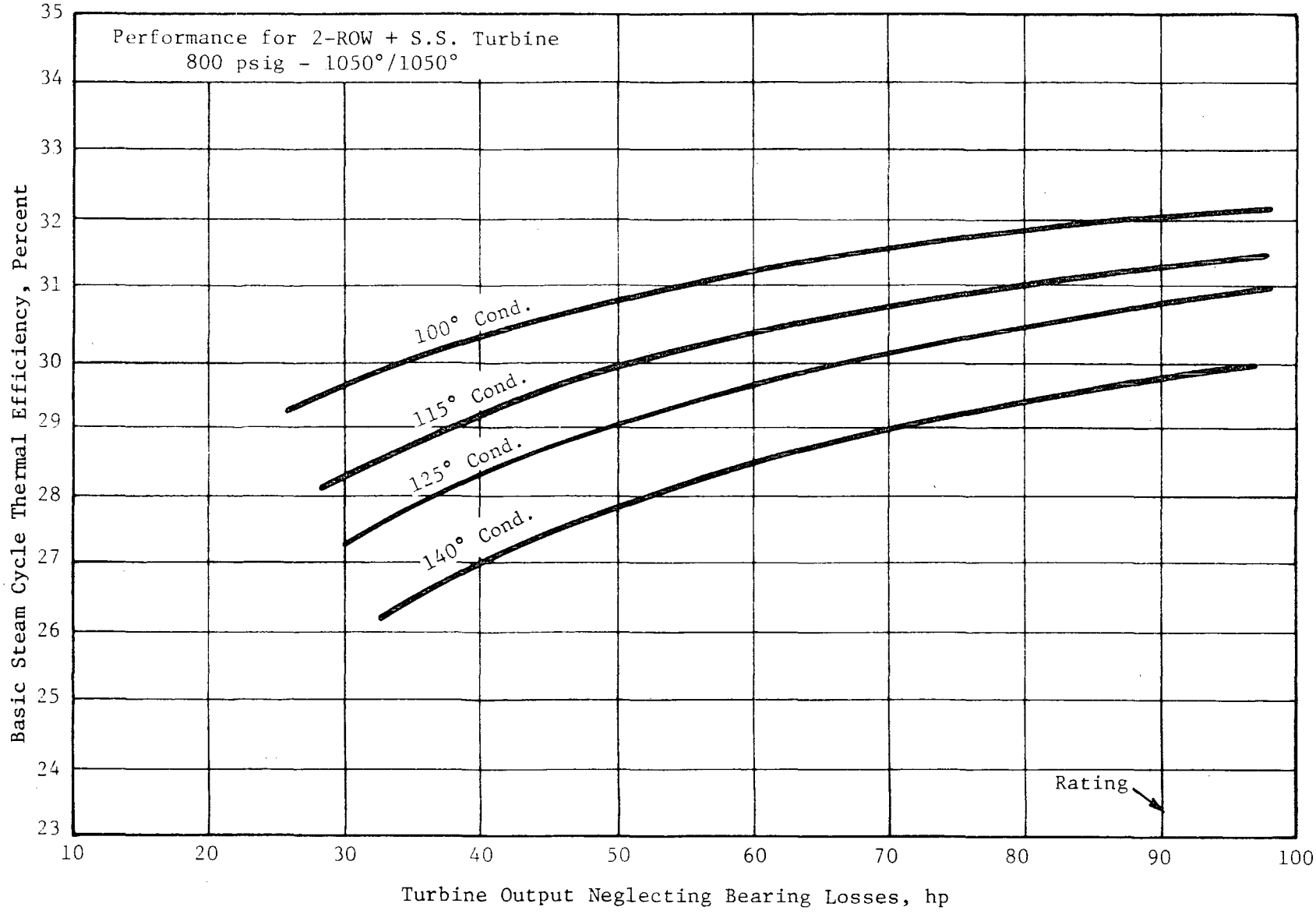

Fig. 3.5-10 Basic Steam Rankine Cycle Thermal Efficiency at Part Load and at Various Steam Condenser Temperatures

792289-1

MECHANICAL TECHNOLOGY INCORPORATED

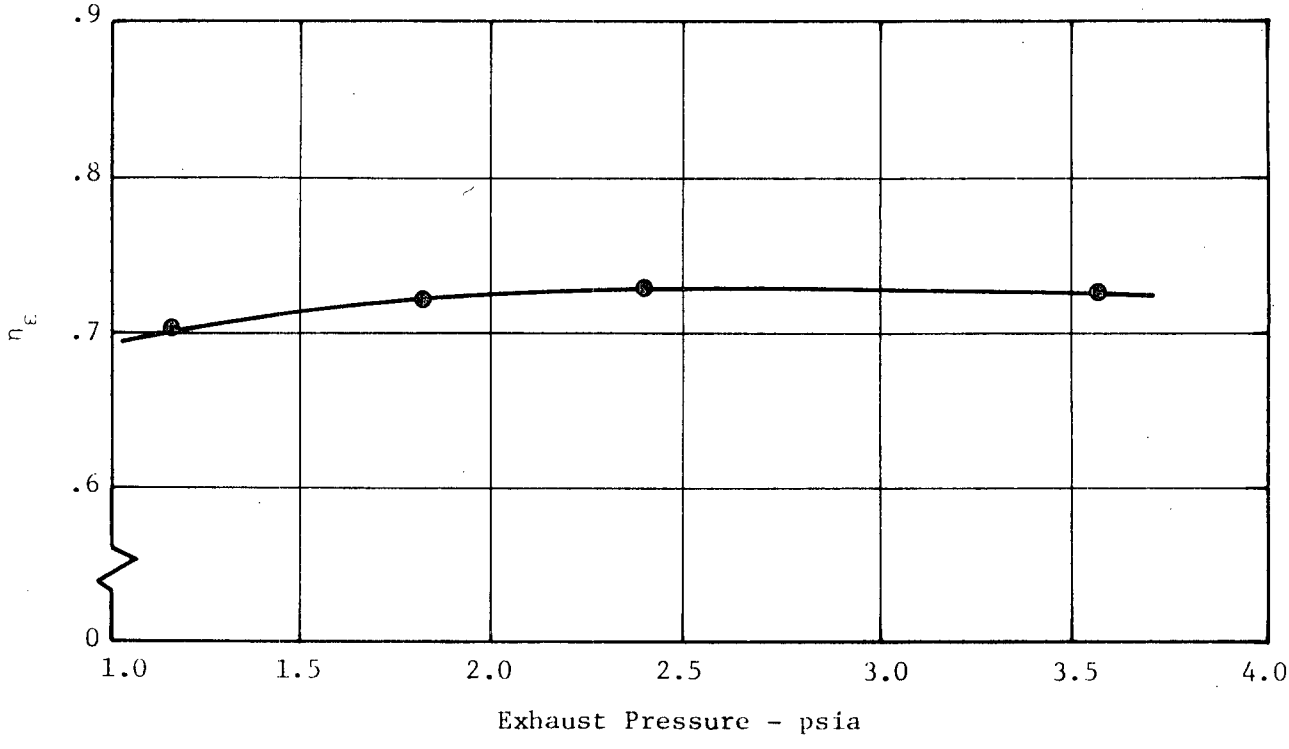

Fig. 3.5-11 Effect of Exhaust Pressure Variation on Stage 3 Efficiency

MECHANICAL TECHNOLOGY INCORPORATED

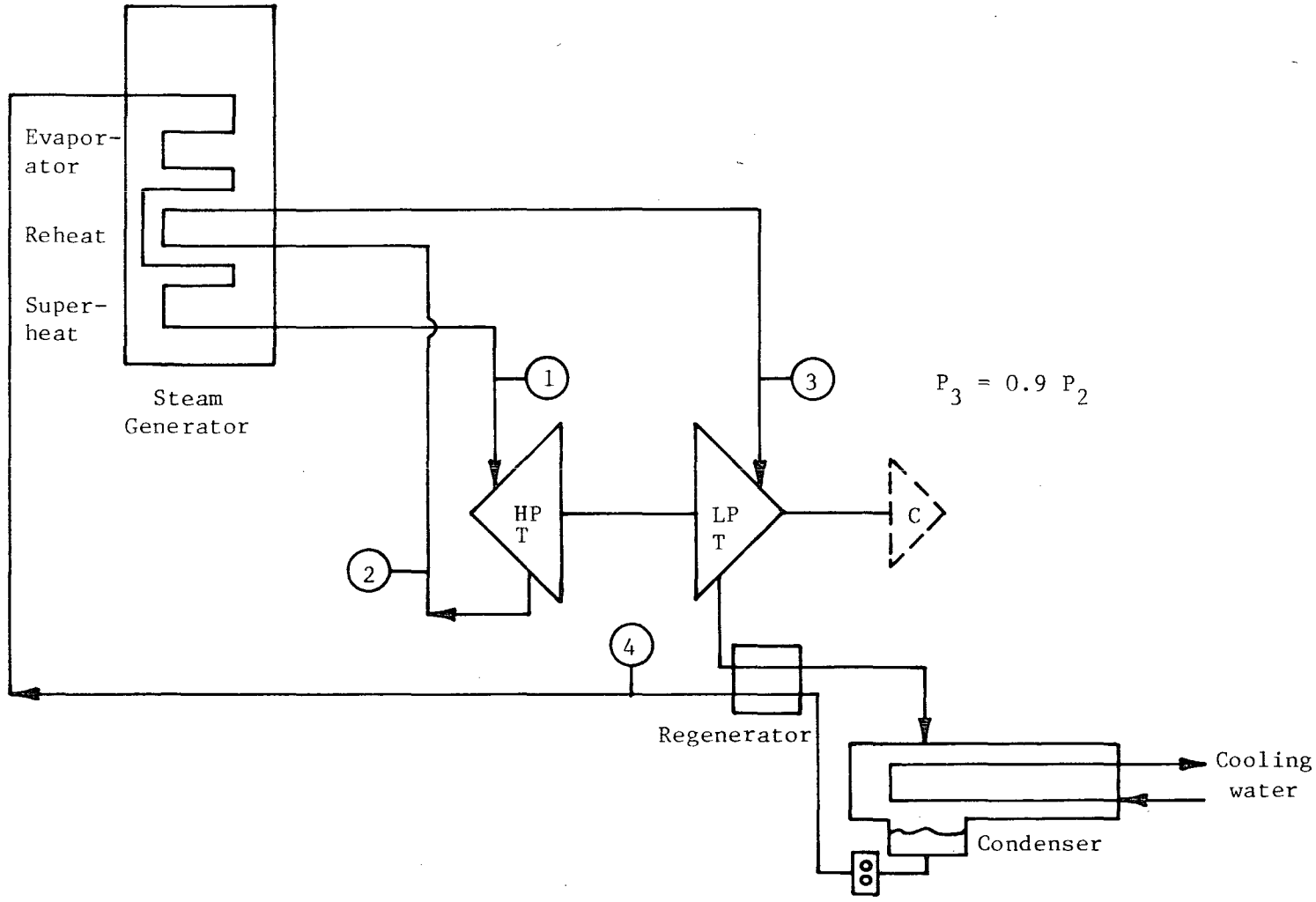

Fig. 3.6-1 Steam System Schematic

792599

Note: See Figure 3.6-1 for statepoint locations.

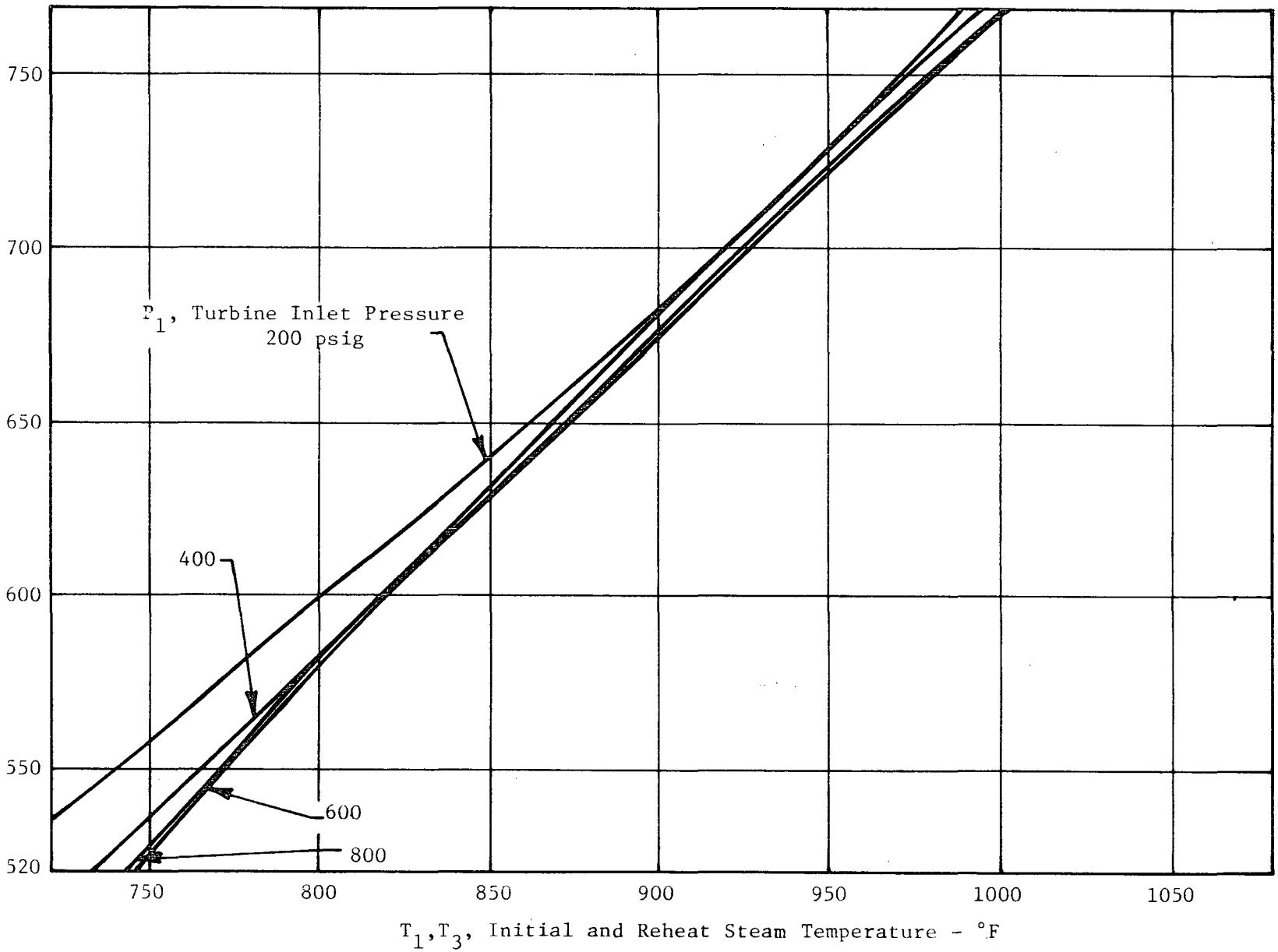

Fig. 3.6-2 Return Temperature (T_2) as a Function of Turbine Inlet Conditions

792243

MECHANICAL TECHNOLOGY INCORPORATED

Note: See Figure 3.6-1 for statepoint locations

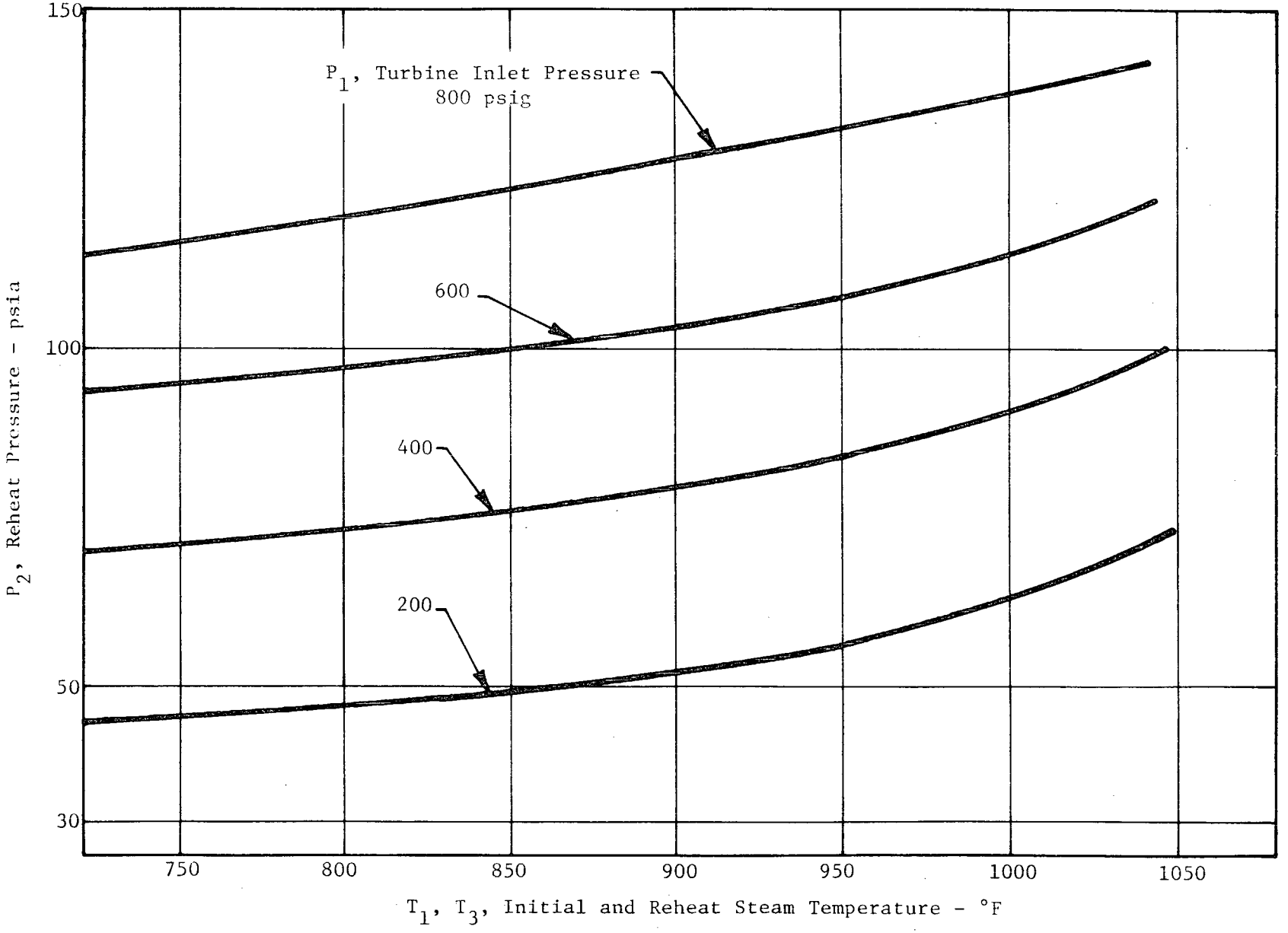

Fig. 3.6-3 Reheat Pressure as a Function of Turbine Inlet Conditions

792242

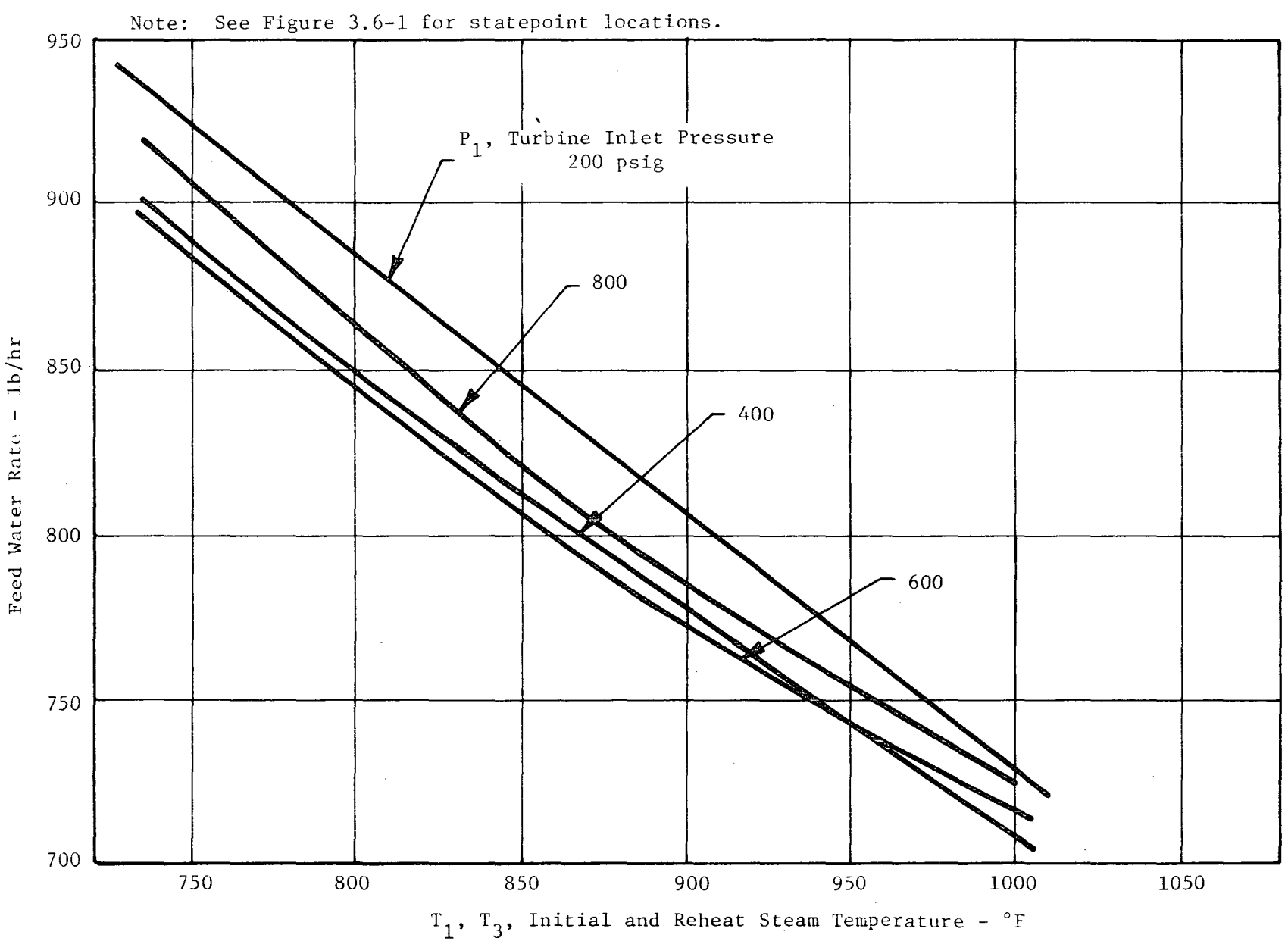

Fig. 3.6-4 Feed-Water Rate as a Function of Turbine Inlet Conditions

792241

Note: See Figure 3.6-1 for statepoint locations

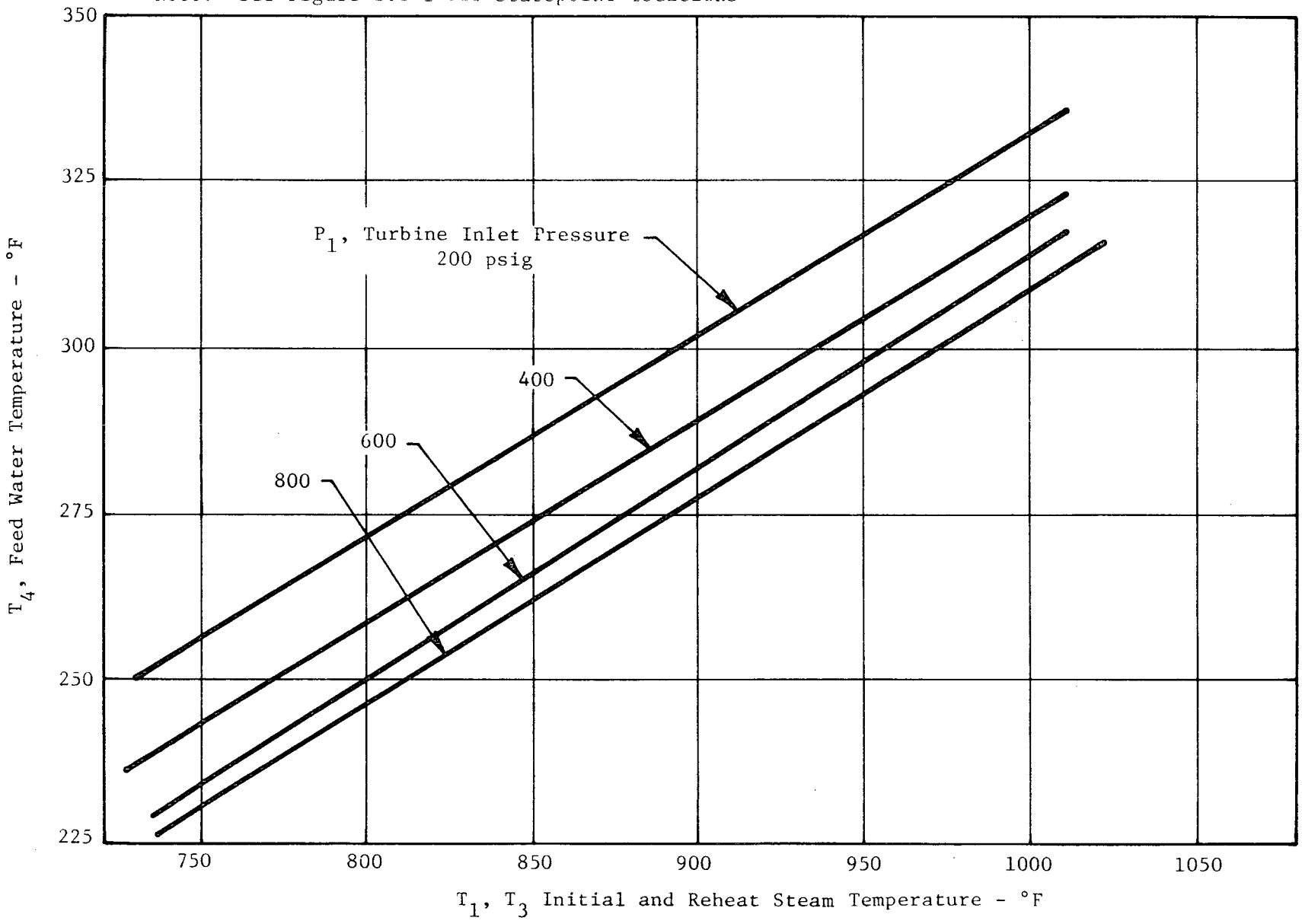

Fig. 3.6-5 Feed Water Temperature as a Function of Turbine Inlet Conditions

TABLE 3.6-1

EFFECTS OF STEAM OUTLET CONDITIONS ON STEAM GENERATOR COIL COSTS
(all cases are 6 pass designs)

Constant Pressure, 600 psig				
Steam Generator Outlet[1] Temperature, °F	900	950	1000	1050
Tubing Cost, $	471	492	504	557
Steam Generator Efficiency η (LHV)	.878	.875	.871	.868
Constant Temperature, 900°F				
Steam Generator Outlet[2] Pressure, psig	200	400	600	800
Tubing Cost, $	536	524	471	472
Steam Generator Efficiency η (LHV)	0.879	.879	.878	.875

(1) For both initial and reheat flows. All cases at 600 psig steam generator outlet pressures.

(2) Initial and reheat at 900°F.

for the 1050°F design than for the 900°F design. However, the annual fuel requirement for the 900°F turbine design was $750 ($2.2/10^6 Btu HHV) higher than the cost of the fuel requirement for the 1050°F design. Thus, the 1050°F design temperature was selected for its economic advantages.

3.6.1.2 Economizer versus Air Preheater. The efficiency target for the steam generator was 92% based on lower heating value (LHV) (83% HHV) which was slightly higher than the values shown in Table 3.6-2. Two design alternatives, (1) adding extra tubing passes in an economizer and (2) adding combustion-air preheater, were explored to achieve the targeted performance. By increasing the number of passes from six to nine the 83% HHV efficiency was achieved. This resulted in a tubing cost of $580, compared with $380 for the air preheater design.

The economizer design was selected in favor of the air preheater on the basis of engineering judgment on relative size, anticipated reliability and economics. The combustion-air preheater plus the ducting to the fan and burner was estimated to add 60% more volume to the steam generator. During warm-up, the density of the combustion air for the preheated concept changed by 40 to 50% causing special start-up air/fuel ratio control considerations. The costs incurred by these differences in controls and unit size were anticipated to exceed $200. This amount, along with the anticipated added control requirements and associated lower reliability precipitated the decision in favor of the economizer design.

3.6.1.3 Design Integration. Two design concepts were developed in relation to the burner fan's integration into the design. Drawings 6 and 7 present the two concepts. The integrated design offered the potential of a cleaner looking, more compact design. However, the design required the extra development of a special blower wheel, mixing tube, and blower shaft seal. Gas and air were mixed upstream of the blower. The impact of the integrated design on product cost could not have been determined without considerable increase in design/development costs for the specialized components. Consequently, a management decision was made to continue the design on the basis of the separate, commercially available, blower-design concept. A decision

TABLE 3.6-2

INITIAL STEAM GENERATOR PARAMETRIC STUDY - SUMMARY OF RESULTS

Case[1]	Eff'y LHV	Exhaust Temp.,°F	Steam ΔP, psig	Steam Flow, pph			Heat Transfer Surface								Total
							Pass Number								
							1	2	3	4	5	6	7	8	
#1 600 psig 900°F S.H. 900°F R.H. (6 pass)	.878	518	154	775	Size	Tubing[3]	1/2x.049	1x.049	1/2x.049	1/2x.049	3/8x.049	3/8x.049			
						Fins[2]	-	-	1x6	1x10	3/4x10	3/4x10			
					Max. Temp.,°F	Tubing	989	1028	616	708	497	366			
						Fins	-	-	786	777	538	391			
					Mate-rials	Tubing	304SS	T22	CS	CS	CS	CS			
						Fins	-	-	CS	CS	CS	CS			
						Length, ft	27.9	19.2	28.8	25.1	28.1	22.6			151.7
						Cost, $	23.72	29.18	61.63	118.97	132.07	106.22			471.79
#2 600 psig 900°F S.H. 900°F R.H. (7 pass)	.897	451	149	775	Size	Tubing	1/2x.049	1x.049	1/2x.049	1/2x.049	3/8x.049	3/8x.049	3/8x.049		
						Fins	-	-	1x6	1x10	3/4x10	3/4x10	3/4x10		
					Max. Temp.,°F	Tubing	989	1028	616	708	497	366	331		
						Fins	-	-	786	777	538	391	350		
					Mate-rials	Tubing	304SS	T22	CS	CS	CS	CS	CS		
						Fins	-	-	CS	CS	CS	CS	CS		
						Length, ft	27.9	19.2	28.8	25.1	28.1	22.6	16.3		168.0
						Cost, $	23.72	29.18	61.63	118.97	132.07	106.22	76.61		548.40
#3 600 psig 900°F S.H. 900°F R.H. (8 pass)	.909	411	152	775	Size	Tubing	1/2x.049	1x.049	1/2x.049	1/2x.049	3/8x.049	3/8x.049	3/8x.049	3/8x.049	
						Fins	-	-	1x6	1x10	3/4x10	3/4x10	3/4x10	3/4x10	
					Max. Temp.,°F	Tubing	989	1028	616	708	497	366	331	310	
						Fins			786	777	538	391	350	327	
					Mate-rials	Tubing	304SS	T22	CS	CS	CS	CS	CS	CS	
						Fins	-	-	CS	CS	CS	CS	CS	CS	
						Length, ft	27.9	19.2	28.8	25.1	28.1	22.6	16.3	9.23	177.2
						Cost, $	23.72	29.18	61.63	118.97	132.07	106.22	76.61	43.38	591.78

(1) All cases based upon 25 percent excess combustion air

(2) Fin OD" x pitch (fins/inch)

(3) Tubing OD" x wall thickness"

MECHANICAL TECHNOLOGY INCORPORATED

TABLE 3.6-2

INITIAL STEAM GENERATOR PARAMETRIC STUDY - SUMMARY OF RESULTS (cont'd)

Case[1]	Eff'y LHV	Exhaust Temp.,°F	Steam ΔP, psig	Steam Flow, pph	Heat Transfer Surface		Pass Number 1	2	3	4	5	6	7	8	Total
#4 600 psig 950°F S.H. 950°F R.H. (6 pass)	.875	525	149	744	Size	Tubing[3]	1/2x.049	1x.049	1/2x.049	1/2x.049	3/8x.049	3/8x.049			
						Fins[2]	-	-	1x6	1x10	3/4x10	3/4x10			
					Max. Temp.,°F	Tubing	1037	1074	772	747	511	381			
						Fins	-	-	927	812	553	405			
					Materials	Tubing	304	T22	CS	CS	CS	CS			
						Fins	-	-	409	CS	CS	CS			
						Length, ft	27.9	19.2	28.8	25.1	28.1	22.6			151.7
						Cost, $	23.72	29.18	61.63	118.97	132.07	106.22			471.79
#5 600 psig 1000°F S.H. 1000°F R.H. (6 pass)	.871	542	143	718	Size	Tubing	1/2x.049	1x.049	1/2x.049	1/2x.049	3/8x.049	3/8x.049			
						Fins	-	-	1x6	1x10	3/4x10	3/4x10			
					Max. Temp°F	Tubing	1085	1122	777	799	514	399			
						Fins	-	-	933	864	559	423			
					Materials	Tubing	304	304	CS	CS	CS	CS			
						Fins	-	-	409	CS	CS	CS			
						Length, ft	27.9	19.2	28.8	25.1	28.1	22.6			151.7
						Cost, $	23.72	41.47	81.79	118.97	132.07	106.22			504.24
#6 600 psig 1050°F S.H. 1050°F R.H. (6 pass)	.868	552	139	693	Size	Tubing	1/2x.049	1x.049	1/2x.049	1/2x.049	3/8x.049	3/8x.049			
						Fins	-	-	1x6	1x10	3/4x10	3/4x10			
					Max. Temp,°F	Tubing	1133	1169	782	839	515	415			
						Fins	-	-	937	899	562	437			
					Materials	Tubing	304	304	CS	304	CS	CS			
						Fins	-	-	409	409	CS	CS			
						Length, ft	27.9	19.2	28.8	25.1	28.1	22.6			151.7
						Cost, $	23.72	41.47	81.79	171.94	132.07	106.62			557.21

(1) All cases based upon 25 percent excess combustion air

(2) Fin OD" x pitch (fins/inch)

(3) Tubing OD" x wall thickness"

TABLE 3.6-2

INITIAL STEAM GENERATOR PARAMETRIC STUDY - SUMMARY OF RESULTS (cont'd)

Case[1]	Eff'y LHV	Exhaust Temp.,°F	Steam ΔP, psig	Steam Flow, pph	Heat Transfer Surface										Total
							Pass Number								
							1	2	3	4	5	6	7	8	
#7 800 psig 900°F S.H. 900°F R.H. (6 pass)	.875	527	125	787	Size	Tubing[3]	1/2x.049	1x.049	1/2x.049	1/2x.049	3/8x.049	3/8x.049			
						Fins[2]	-	-	1x6	1x10	3/4x10	3/4x10			
					Max. Temp,°F	Tubing	989	1028	646	731	504	366			
						Fins	-	-	816	800	547	393			
					Materials	Tubing	304	T22	CS	CS	CS	CS			
						Fins	-	-	CS	CS	CS	CS			
						Length, ft	27.9	19.2	28.8	25.1	28.1	22.6			151.7
						Cost, $	23.72	29.18	61.63	118.97	132.07	106.32			471.74
#8 400 psig 900°F S.H. 900°F R.H. (6 pass)	.879	514	129	778	Size	Tubing	5/8x.049	1x.049	1/2x.049	1/2x.049	3/8x.049	3/8x.049			
						Fins	-	-	1x6	1x10	3/4x10	3/4x10			
					Max. Temp,°F	Tubing	1012	1031	804	661	470	372			
						Fins	-	-	949	740	512	395			
					Materials	Tubing	304	T22	304	CS	CS	CS			
						Fins	-	-	409	CS	CS	CS			
						Length, ft	22.3	19.2	30.2	26.1	28.9	23.6			150.3
						Cost, $	21.41	29.18	103.89	123.71	135.83	110.92			524.94
#9 200 psig 900°F S.H. 900°F R.H. (6 pass)	.879	514	98	804	Size	Tubing	5/8x.049	1x.049	5/8x.049	5/8x.049	1/2x.049	3/8x.049			
						Fins	-	-	1-1/4x10	1x10	1x10	3/4x10			
					Max. Temp,°F	Tubing	1011	1109	883	706	425	374			
						Fins	-	-	1029	787	473	398			
					Materials	Tubing	304	T22	304	CS	CS	CS			
						Fins	-	-	409	CS	CS	CS			
						Length, ft	22.3	19.2	24.2	20.9	21.1	21.6			129.3
						Cost, $	21.41	29.18	129.86	154.61	100.01	101.52			536.59

(1) All cases based upon 25 percent excess combustion air

(2) Fin OD" x pitch (fins/inch)

(3) Tubing OD" x wall thickness"

MECHANICAL TECHNOLOGY INCORPORATED

was also made to develop the integrated design at a later date, when product volume warranted the development.

3.6.2 Pass Arrangement/Temperature Distribution

Drawing 6 presents the layout of the 9-pass heat transfer surface. Figure 3.6-6 shows the water/steam flow path and temperature distribution through the nine passes. This figure also shows the manner by which the combustion temperature changed as it flowed past the tubing.

3.6.3 Control Concept

The steam generator was designed to operate continuously at the design load, simplifying the controls and reducing their cost. The reheat temperature control was preset during shop testing and required only periodic adjustments in the field. The superheater discharge temperature was controlled from the feed water rate, by maintaining a preset value using a flow control valve and a feed water pump bypass. The basic control concept involved using the firing rate to control discharge pressure at 800 psig and using the feed water rate to control the discharge temperature at 1050°F.

A conventional gas/air train was used in the burner system. This system which met UL 795 specifications, also included the burner supervisory control and the pre-purge and past purge controls. The control scheme is shown on Drawing 8.

3.6.4 Start-up Procedure

The steam generator was preheated before water was introduced into the coils. This was a practice which had been effectively demonstrated with other small mono-tube steam generators. This method produced steam immediately after the water was introduced into the preheated tubes. In this design a small seperator had been added at the turbine inlet as a precautionary measure.

Under normal operating conditions, the total heat contained in the steam generator's heat transfer materials was equivalent to 30 seconds of the heat output from the burner. Thus, the steam generator preheat time was also 30 seconds. The system start-up sequence is outlined in Section 3.5.3.2. This

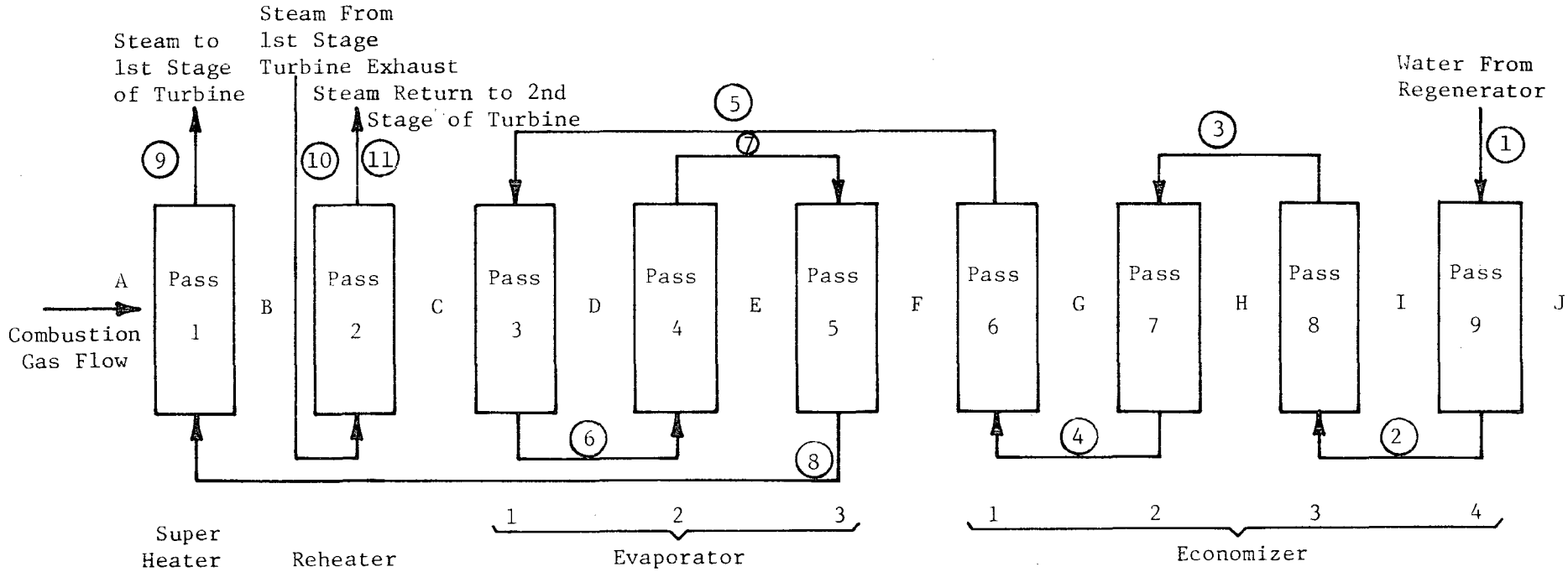

TEMPERATURE PROFILES

Water/Steam

Station	1	2	3	4	5	6	7	8	9	10	11
Temp., °F	273	292	322	368	446	520	520	607	1050	570	1050

Combustion Gas

Station	A	B	C	D	E	F	G	H	I	J
Temp., °F	3149	2658	2310	1408	909	727	559	458	391	350

Fig. 3.6-6 Schematic Flow/Temperature Conditions in Monotube Steam Generator

792598

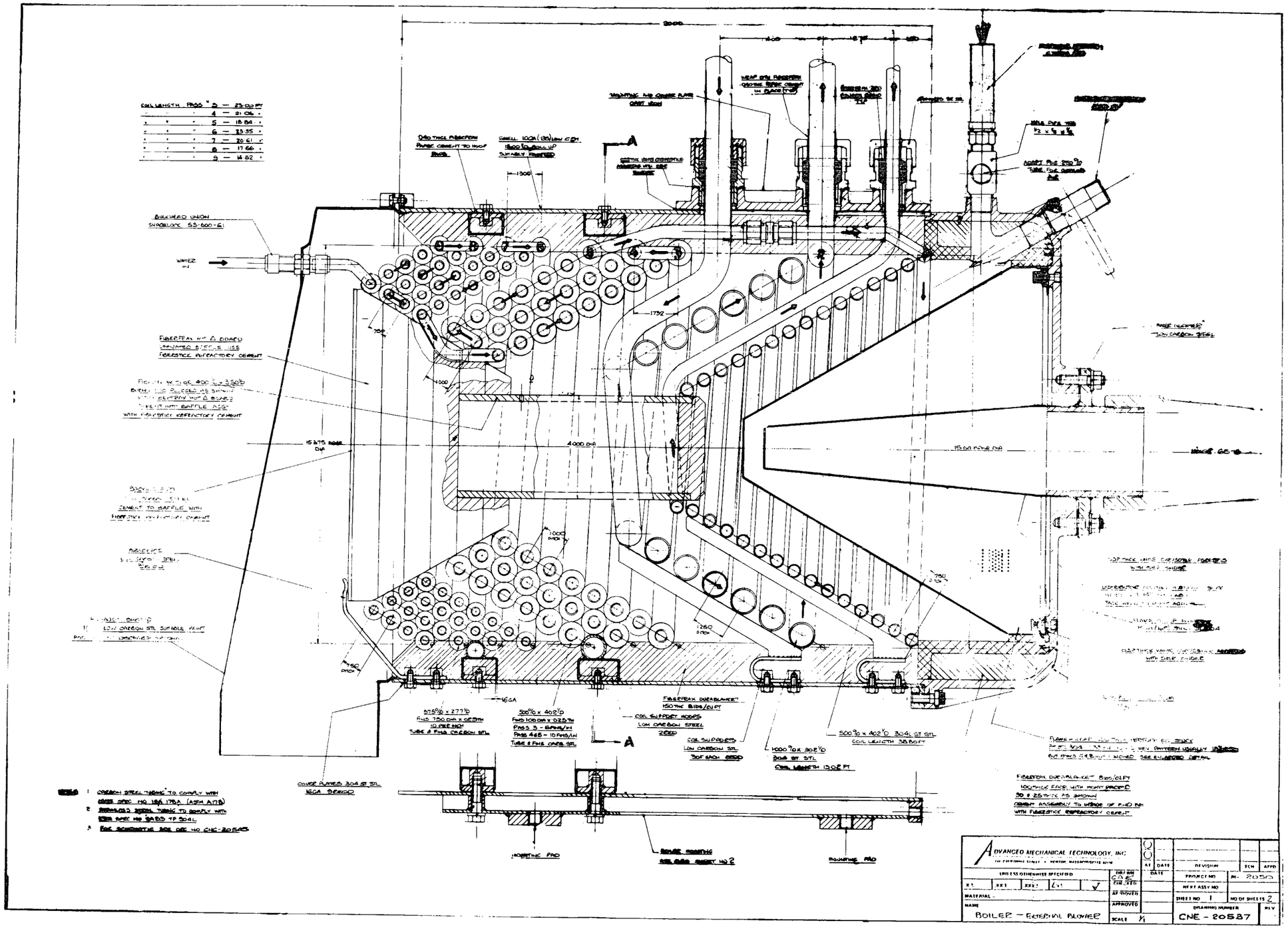

Sheet 1 of 2

MECHANICAL TECHNOLOGY INCORPORATED

Drawing 6

MTI-19789

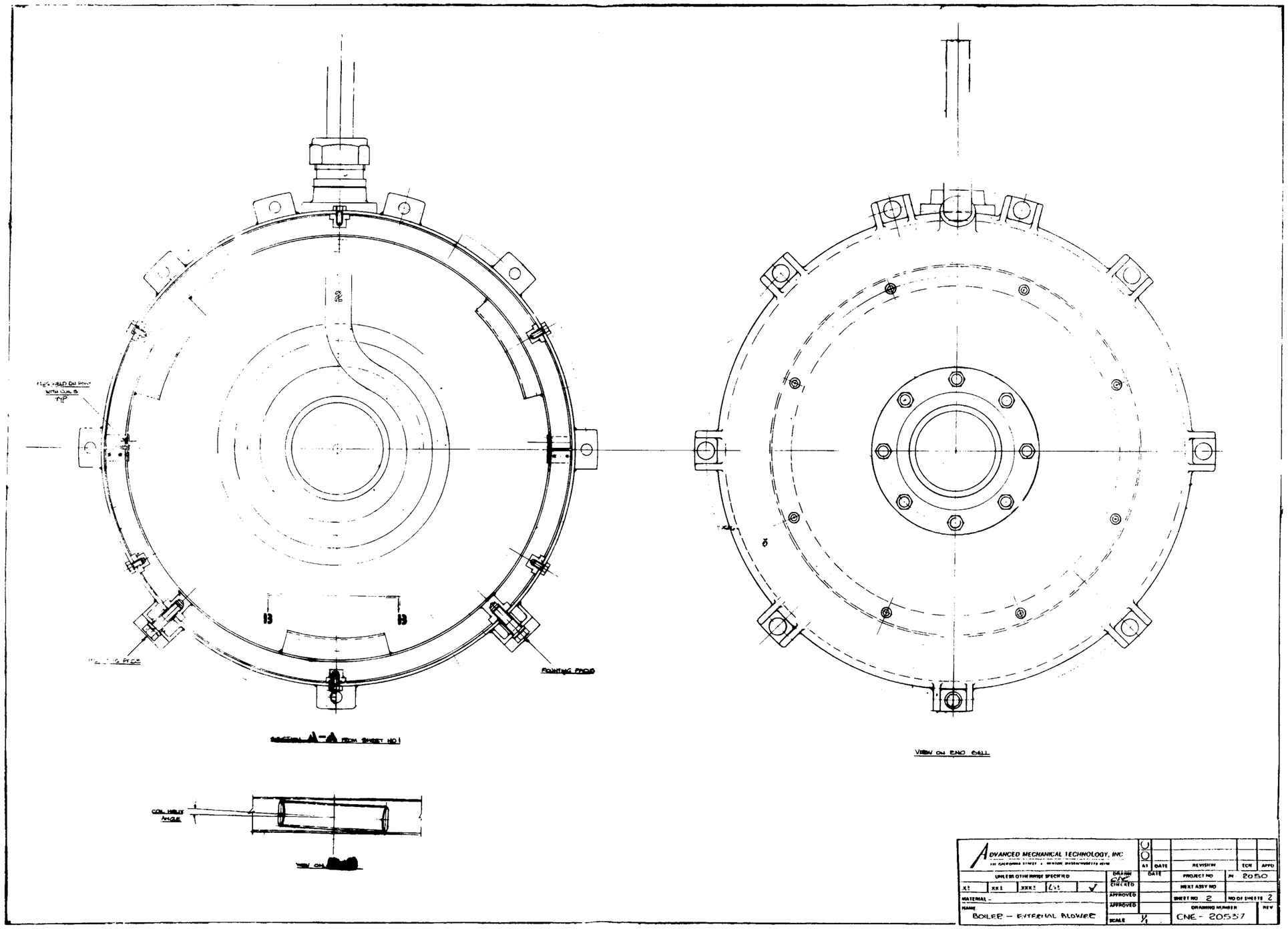

Sheet 2 of 2

Drawing 6

MECHANICAL TECHNOLOGY INCORPORATED

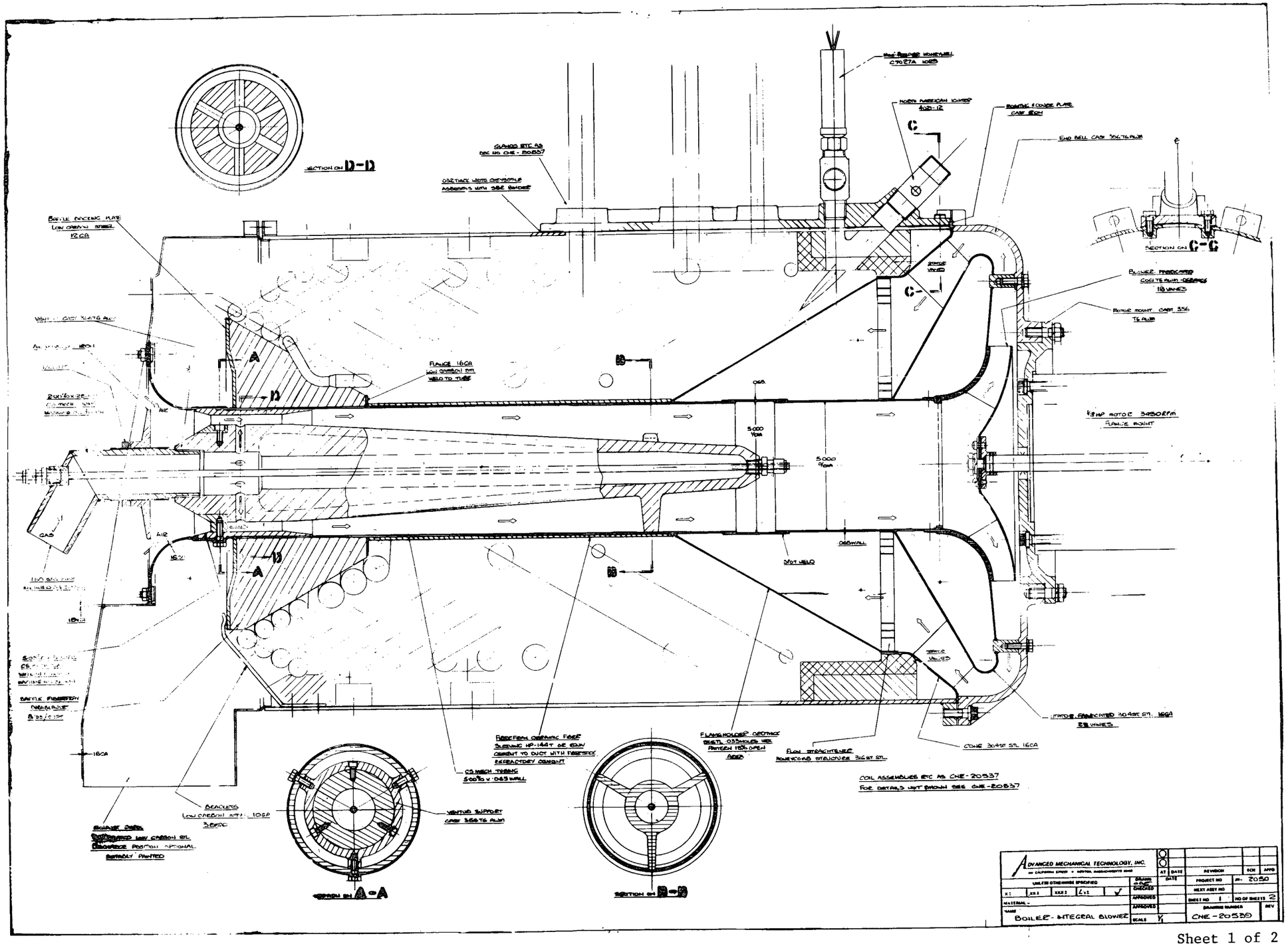

Sheet 1 of 2

Drawing 7

MECHANICAL TECHNOLOGY INCORPORATED

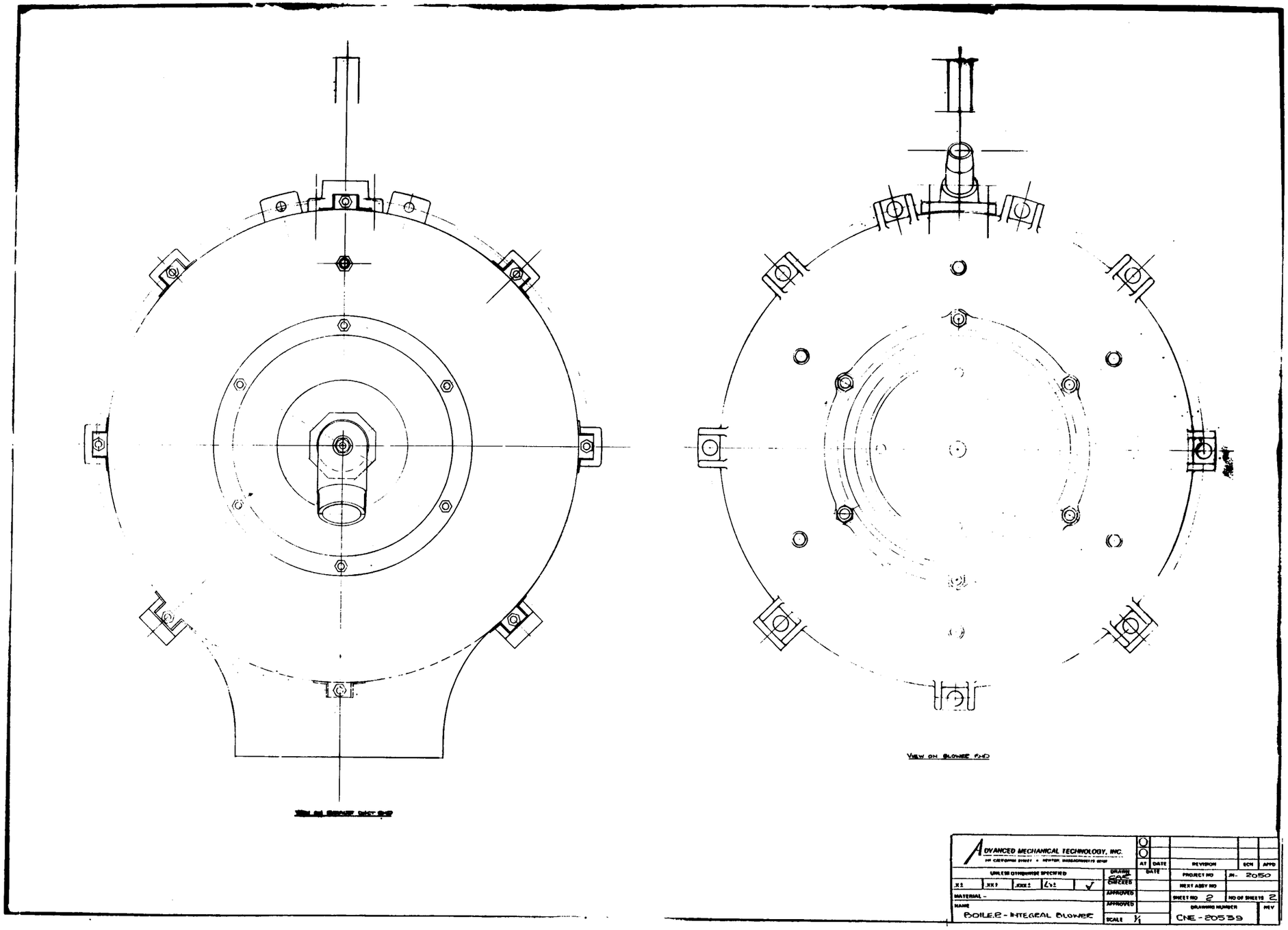

Sheet 2 of 2

Drawing 7

MECHANICAL TECHNOLOGY INCORPORATED

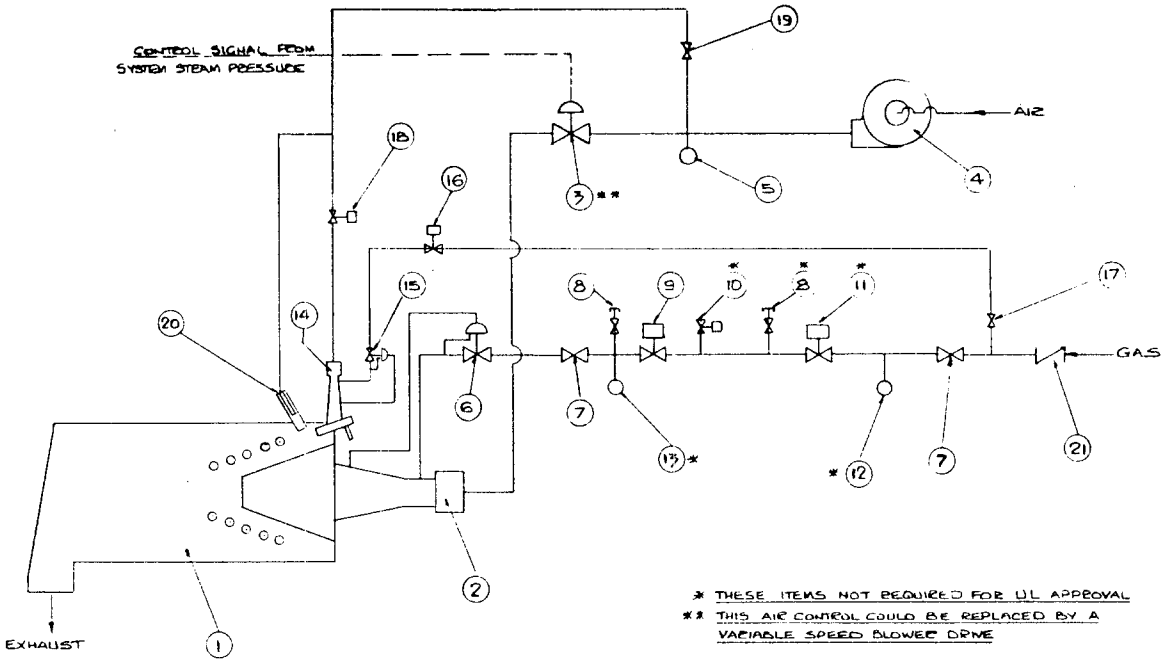

* THESE ITEMS NOT REQUIRED FOR UL APPROVAL

** THIS AIR CONTROL COULD BE REPLACED BY A VARIABLE SPEED BLOWER DRIVE

FOR PARTS LIST SEE PL 20537

ADVANCED MECHANICAL TECHNOLOGY, INC. 141 CALIFORNIA STREET • NEWTON, MASSACHUSETTS 02160		AT	DATE	REVISION	ECN	APPD
UNLESS OTHERWISE SPECIFIED	DRAWN GVC	DATE		PROJECT NO	JN- 2050	
.X ± .XX ± .XXX ± ∠ ±	CHECKED			NEXT ASSY NO		
MATERIAL -	APPROVED			SHEET NO 1	NO OF SHEETS 1	
NAME BOILER SCHEMATIC EXTERNAL BLOWER	APPROVED			DRAWING NUMBER CNC-20544		REV
	SCALE					

801625

Drawing 8

section also describes the relationship of the steam generator to other components within the system.

3.6.5 Shutdown Procedure

At both scheduled and emergency shutdowns, the steam generator was blown down through a dump valve at the economizer inlet. The intent of this procedure was to use the high-pressure steam in the system to back flush all the residual water in the monotube coils at the instant of shutdown. The residual water then passed out through the economizer inlet and into the condenser hot well. Any residual water which remained in the monotube coils should have been evaporated by the residual heat stored in the metal, thus leaving the coils dry during shutdown.

3.6.6 Mechanical Construction

AMT's engineering layout, Drawing 7, shows the mechanical construction of the steam generator. The finned coils which were tightly nested promoted uniform gas velocity and avoided channeling of the combustion products. They could all have been formed on the same 60°-taper mandrel by starting the wrap at the appropriate diameter for each coil. This technique was developed for earlier steam generators of this configuration.

All the finned heat transfer coils (passes 3 through 9) were constructed of carbon steel tubing and fins with a maximum temperature of 716 and 781°F, respectively. The superheater and reheat passes were unfinned 304SS tubing with maximum temperatures of 1131 and 1222°F, respectively. The superheater was the most highly stressed at the 800 psig operating pressure but was still 130°F below ASME's 100,000 hr creep rupture tube metal temperature limit. The design was only analyzed for full-load operating conditions.

3.6.7 Safety Considerations and Product Certification

The LSM steam generator was patterned after the compact mono-tube automotive steam generator developed by the Scientific Energy System Corporation in the early 1970s. Through the use of small diameter, thin wall, finned, stainless steel tubing, this design (including burner and blower) achieved a specific weight of about 50 lb per million Btu per hour and a specific volume of about

1 ft^3 per million Btu per hour. In spite of the highly economical use of material, the LSM steam generator was designed in accordance with the ASME power boiler code, with particular attention to the stress and temperature limits as recommended by ASME. The mono-tube design was extremely safe, containing only about a liter of water and actually having less stored energy than many residentially sized pressure boilers. The steam generator for any product such as a heat pump would become the focus of attention of local code enforcement. The foregoing points are especially significant for the development of a certification standard for any product containing a steam generator in a high-performance steam-Rankine prime mover.

For any generic type of gas heat pump system, a special national certification standard may be expected to be developed under the aegis of the American Gas Association/American National Standards Institute (AGA/ANSI). Accordingly, any standards for steam-Rankine gas heat pumps would be developed incorporating the steam generator features cited above. These standards would adhere to ASME boiler code specifications, American Society for Testing and Materials (ASTM) materials code specifications, Underwriters Laboratories (UL) electrical and controls specifications, and previously developed gas burner and burner control specifications.

3.7 Regenerator

The purpose of the regenerator was to enhance the steam Rankine cycle efficiency by recovering most of the superheat remaining in the turbine's third-stage exhaust. The process design conditions for the regenerator are shown in Table 3.7-1.

For economic reasons, the regenerator coil was designed to fit in the turbine exhaust duct. The coil accepted the steam as it left the second turbine wheel, removed the superheat through a finned spiral-wrapped coil (with feed water flowing through it) and then discharged the cooled steam into the condenser. The steam and water flow rates included a 5% margin on flow for safety factor.

TABLE 3.7-1

REGENERATOR PROCESS DESIGN SPECIFICATION

Steam Side

Steam Flow	= 490 lb/hr
Steam Inlet Temperature	= 483°F
Steam Inlet Pressure	= 2.4 psia
Steam Outlet Temperature	= 150°F
Steam Outlet Pressure	= 2.0 psia

Water Side

Water Flow	= 490 lb/hr
Water Inlet Temperature	= 125°F

3.8 Steam Condenser

In this design, the steam condenser served multiple functions. The steam condenser housed the lube oil cooling coil in the hot well, deaerated (degased) the condensate in the hot well and performed its normal condensing function. The objective of the integrated design concept was to minimize equipment cost.

The steam condenser manufacturer's standard material were used as the basis for the interim costing effort. After reviewing the manufacturer's standard material (carbon steel shell, tube sheets, end covers and AS214 tubing), it became certain that the material quality had to be increased. For this application the use of stainless steel may have been required, in order to have achieved a reasonable component life.

3.8.1 Sizing Double-Bundle Condenser

The heat transfer surface area for each bundle was determined in the system optimization phase, as detailed in Section 2.3.4. An overall heat transfer coefficient of 300 Btu/hr-ft^2-°F was used for both tube bundles.

3.8.2 Hot Well Deaeration (Degasing)

As the steam condensed into liquid, it contained small quantities of non-condensable gases. The steam normally reached the hot well at a temperature which was several degrees below the saturation temperature (97 to 117°F). A large portion of these dissolved gases were removed from the condensate by bringing the condensate to the saturation temperature before it left the hot well. The low heating system supply temperature of 110°F made it possible to use the rejected heat from the lube oil system as the heat source for this function. The lube oil entered the deareator at about 155°F and was returned to the bearings at 135°F, thus returning some of the bearing loss (heat) back into the steam cycle. The complete details of this deaeration scheme were not fully developed at the time the design activity was terminated.

3.8.3 Removal of Noncondensables

The noncondensables which were removed from the condensate were in turn removed from the steam condenser (preventing blanketing of the heat transfer surface) via a small vacuum pump. A small amount of steam normally accompanied

these noncondensables. Thus, a small secondary condenser was used to partially recover the accompanying steam and return it to the main steam condenser hot well. The objective of the secondary condenser was to minimize the feed water makeup requirements.

3.9 Feed Water Treatment

One goal for this design was to achieve a completely closed (hermetic) steam power cycle. Technically, this goal was not achievable because noncondensable gases developed in the system and had to be removed from the steam condenser to maintain its effectiveness. Small amounts of water vapor accompanied the noncondensable gases and eventually this water had to be replaced via a makeup system. One source of these noncondensables was the dissociation of the water into hydrogen and oxygen - which was a time/temperature phenomenon. Another source of the noncondensable gases was the decomposition of the pH- and O_2-controlling additives. In addition to the feed water makeup system, a condensate polishing system was also required to control the quality of the feed water.

Before the basic requirements of the steam feed water treatment system are presented, the fundamental techno-economic design objectives for this subsystem can be restated as follows:

- The cost to meet the water quality criteria had to be minimal.
- Low maintenance requirements had to be consistent with conventional HVAC equipment service requirements.
- Water treatment was not to be site dependent.
- The prototype subsystem had to have monitoring, alarm/trip and recording capabilities which were assumed not to be required on commercial units.
- The requirement for parasitic power had to be low.

3.9.1 Water Quality Requirements

There is an absence of industrial or commercial experience which relates to the water quality requirements for a small self-contained steam power plant such

as the one in this application. Therefore, time proven practices were adopted from electric utility experience.

The above equipment characteristics would be fairly straightforward if a drum type steam generator with moderate steam conditions was being addressed. The fact that a mono-tube generator with elevated steam temperatures and pressures was used intensified the criticalness of water quality. This system, combined with small steam system sizes (valves, blading, tubing, etc.), made feed water purity a key element in providing continuous 8760 hr/yr) operation. The basic goal of water treatment for conventional power plants has been the purifying of water to meet operational requirements in terms of equipment life, operational performance and maintenance at minimum cost. The gas-fired heat pump Rankine system was no different.

This application was very similar to a base load electric utility power plant in that it had to run continuously at high percentage load except for schedule maintenance on a yearly basis. Maintenance was to be conducted preferably in the fall or spring when heating/cooling load requirements were at a minimum.

The nature of the mono-tube generator demanded that the feed water be polished to a high degree of purity since the mono-tube generator did not have the advantage of the distillation process that takes place in a drum type unit where carryover is reduced by 90%. Table 3.9-1 gives the nominal feed water quality requirements for nine U.S. mono-tube (once through) utility generating stations with average steam conditions of 900/600.

The continuing effort to increase cycle efficiencies by increasing steam conditions has brought steam cycle water purity requirements to the point where they are comparable with water used in the manufacture of pharmaceuticals. The utility once-through generator requirements given in Table 3.9-1 could be met with a combination of water treatment equipment elements. However, the most economic approach appeared to be a combination of reverse osmosis (RO) and replacement cartridge deionization. A schematic of the steam system showing the makeup water treatment, condensate polishing and pH/O_2 control functions is presented in Figure 3.9-1. Table 3.9-2 shows the water quality specifications adopted for the 800/1050/1050 steam conditions used in this system.

TABLE 3.9-1

NOMINAL FEED WATER QUALITY STANDARDS

Total dissolved solids	<50 ppb*
Total suspended solids	<10 ppb
Silica	<20 ppb
Sodium	< 5 ppb
Iron	10 ppb
Copper	5 ppb
Chlorine	<20 ppb
Dissolved oxygen	< 7 ppb
Dissolved carbon dioxide	0 ppb
pH, alkalinity	9.3

*ppb - parts per billion

TABLE 3.9-2

FEED WATER QUALITY REQUIREMENTS FOR LSM SYSTEM

Water Quality Specifications	Once-Through
Total Solids	30 ppb*
Silica	10 ppb
Iron	5 ppb
Chloride	1 ppb
Sodium	1 ppb
Calcium Magnesium	0 ppb
Potassium	1 ppb
$CO_3/HCO_3/SO_4/NH_3$	0 ppb
pH	9.4

*ppb - parts per billion

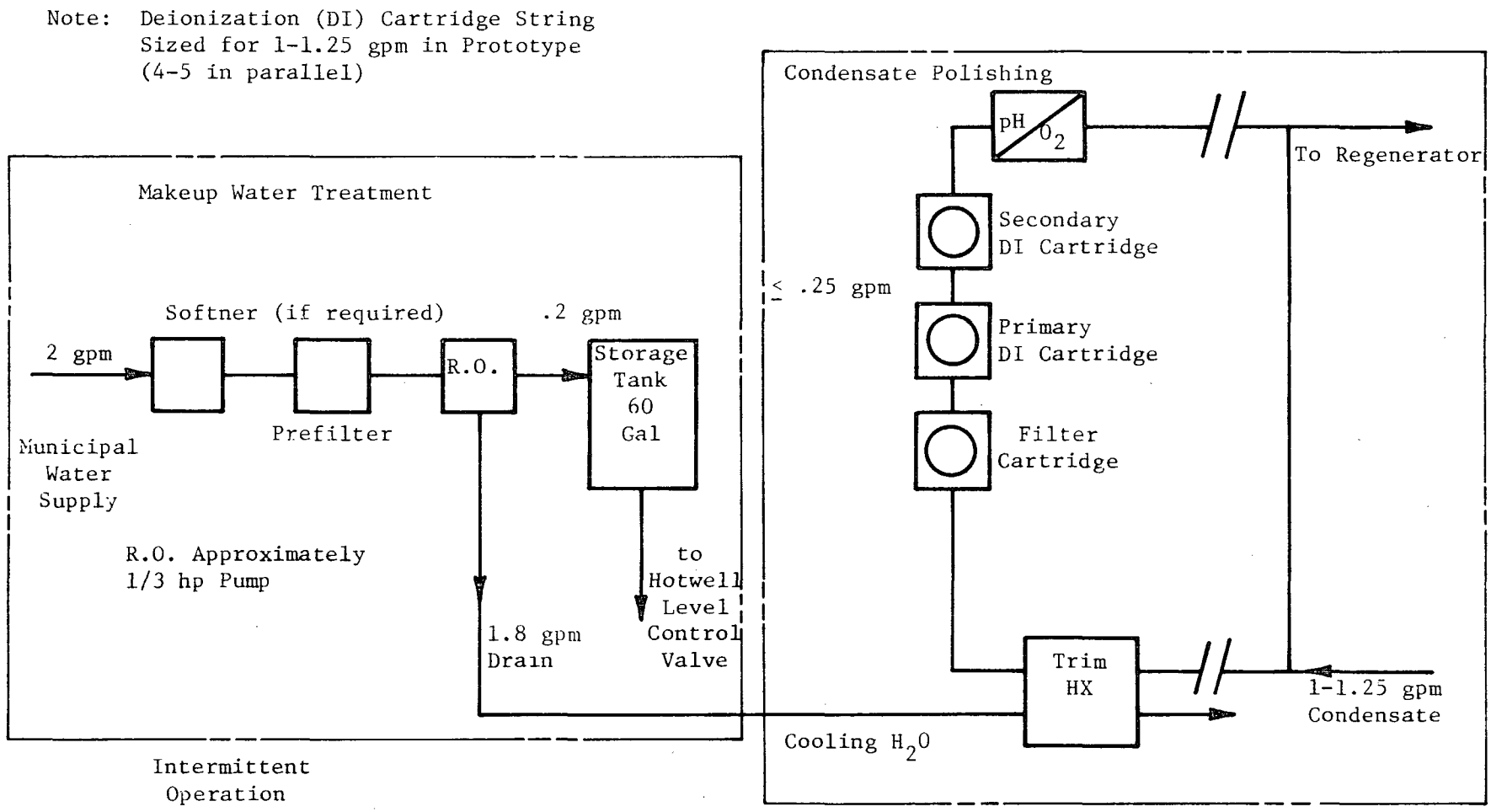

Fig. 3.9-1 Steam System - Feed Water Treatment

792726

MECHANICAL TECHNOLOGY INCORPORATED

Turbine scaling would occur even if the high water quality standards (Table 3.9-2) were maintained. With the help of References 4 and 5 the performance deterioration of the turbine can be somewhat quantified. Cowgill and Robbins (Reference 4) presented an excellent qualitative assessment of the problems resulting from contaminated steam in large turbine/generators. The specific point to be made here is the projected level of performance deterioration to be expected during service, and how that may impact design capabilities of the steam system. Reference 5 indicated high pressure turbine section deposits of 1 to 2 mils/year. These deposits were composed of cuprous oxide, magnetic iron oxide with traces of nickel, zinc and silica. The observed iron, copper and silica in the feed water were in the 2 to 5 parts per billion (ppb) range during normal operation. This 1 to 2 mils/year was equated to a percentage point loss in turbine efficiency. General Electric, in Reference 4, cited a 3 to 4% loss in efficiency combined with a 1% flow reduction for a deposition of 3 mils. These losses resulted in a .3 to .7% reduction in steam turbine output per mil of deposition for large (>130 MW) turbines.

In order to have estimated the reduction in output for the small size (<100 kW) turbine in this system, the following rationale may have been used. A 130 MW turbine had a steam flow of approximately 1×10^6 lb/hr at 1000/1000 steam conditions and the small unit had a flow of 500 lb/hr. These numbers represented a 2000 to 1 ratio of steam flows. Therefore, the relationship in flow area was the same, since steam conditions were about equal. Nozzle and bucket configuration would play a part in assessing the effect of deposition; however, if a mil deposited represented a given percentage of the area between nozzle or bucket segments, this could be equated to a percentage power loss over the deposition period. A circular hole 100 mils in diameter with a buildup of 1 mil would experience a 4% area reduction. If nozzle diaphragms were on this order of magnitude, a 4% turbine power loss would probably result. The high pressure section in this design had four 72.5 mil nozzles (Section 3.5.2). Based on meeting steam generator feed water contaminant levels for the CNG steam conditions, the expander could expect a 5% year capacity reduction due to small, 1 or 2 mil, deposits.

3.9.2 Temperature Limitations on Condensate Polishing

Replaceable cartridges were selected for the deionization, pH and O_2 control functions. This selection was made on the basis of first cost, simplicity of operation and ease of maintenance. Due to the resins used in the deionization (D/I) cartridges, the water temperature in the condensate polishing stream was not to exceed 100°F. A small heat exchanger was included between the hot well and these D/I cartridges.

3.10 Lube Oil System

The compressor shaft seal was located between the compressor wheel and the bearing so a single lube oil system could be used on this application. As shown in Drawing 3, the gearbox (base) serves as the lube oil system reservoir to cut lube oil system costs. The heat rejected by the motor/generator, bearings and gears was captured by the oil and released through a deaerating (removing noncondensables from feed water) coil located in the condenser hot well. In this way the heat rejected from the lube oil system could be introduced into the heating water loop while serving an important secondary function.

REFERENCES

1. Linhardt, H. D. and Silvern, D. H., "Analysis of Partial Admission Axial Impulse Turbines", ARS semi-annual meeting, Los Angeles, 1960.

2. Sapozhnikov, V. N., Shchekoldin, A. V., and Usanovich, L., "(KTZ) Investigation of the Operation of a Supersonic Velocity Stage", 17(5), Toploenergika, 1970, pp. 29-32.

3. Balje, O. E., "A Study on Design Criteria and Matching of Turbomachines", Part A - Similarity Relations and Design Criteria of Turbines, ASME Journal of Engineering for Power, January 1962.

4. Cowgill, T. and Robbins, K., "Understanding the Observed Effects of Erosion and Corrosion in Steam Turbines", General Electric Co., Power Magazine 9/76.

5. Andres, R. F., "Water-Steam Cycle Experience with Subcritical Pressure Once-Through C.E. - Sulzer Monotube Boilers", The Dayton Power and Light Company, Dayton, Ohio.

6. Guthrie, K. M., Process Plant Estimating, Evaluation and Control, Craftsman Book Company of America, Los Angeles, California, 1974.

ATTACHMENT A

FLOW CHARTS FOR SYSTEM MODEL

Chart		Page
1	Overall System Model Flow Chart	A-2
2	Heat Exchanger Model Flow Chart	A-4
3	COP Calculation Efficiency Flow Chart . .	A-5
4	Compressor Efficiency Flow Chart.	A-6
5	Prime-Mover Models Flow Chart	A-7
6	Part-Load Turbine Operation	A-8

Chart 1

Overall System Model Flow Chart

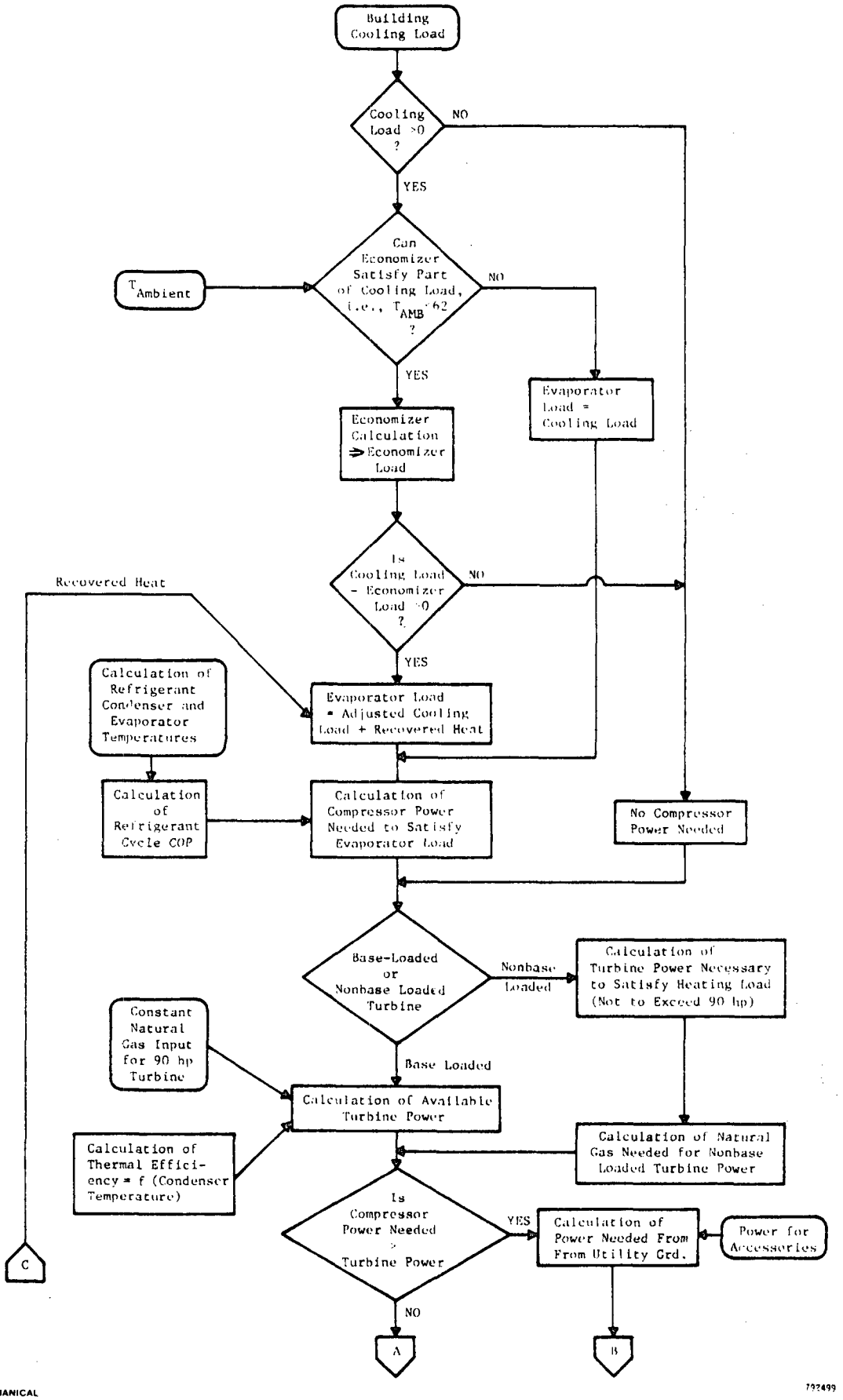

MECHANICAL TECHNOLOGY INCORPORATED

792499

Chart 1 - Cont'd

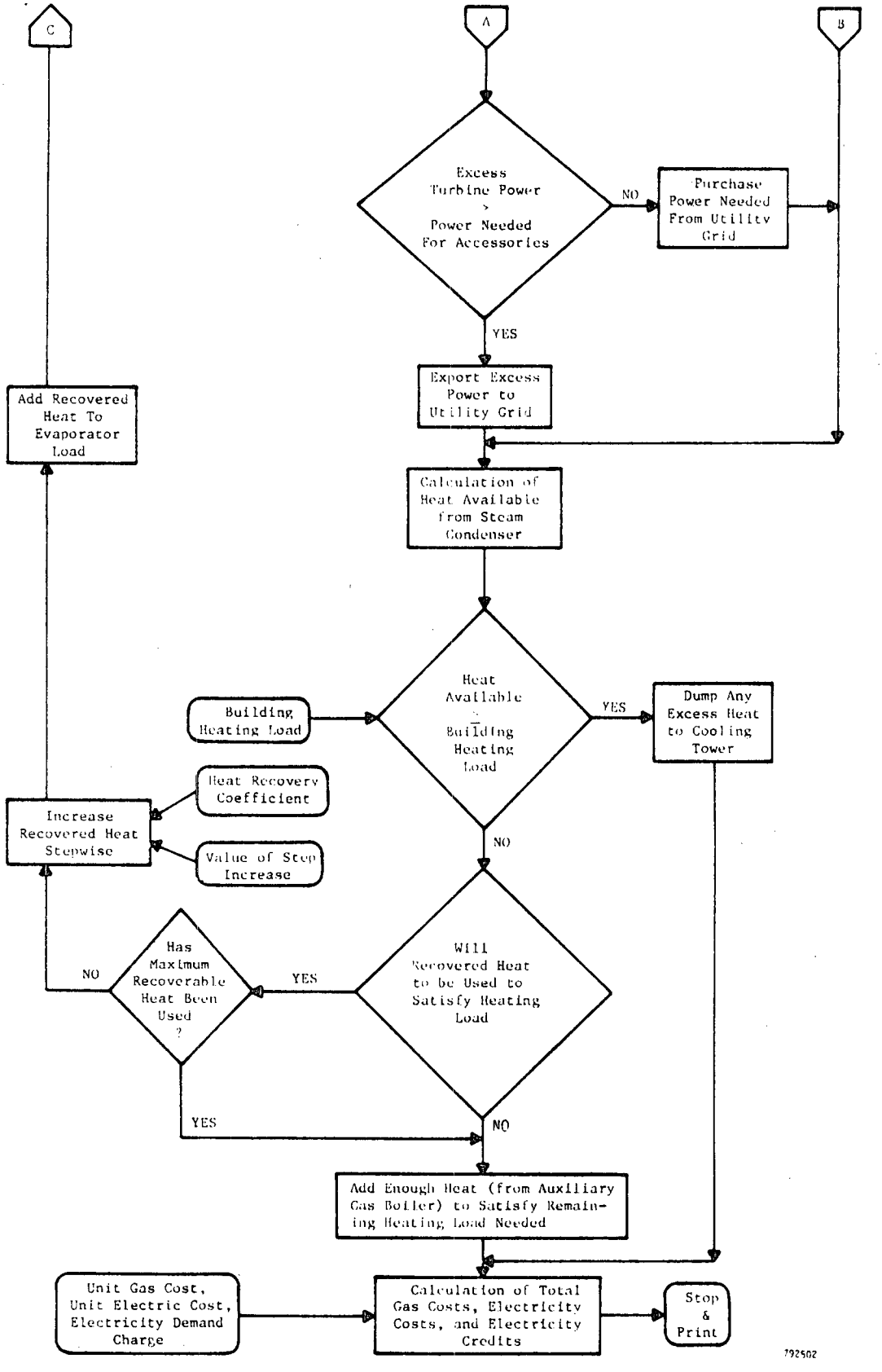

Chart 2

Heat Exchanger Model Flow Chart

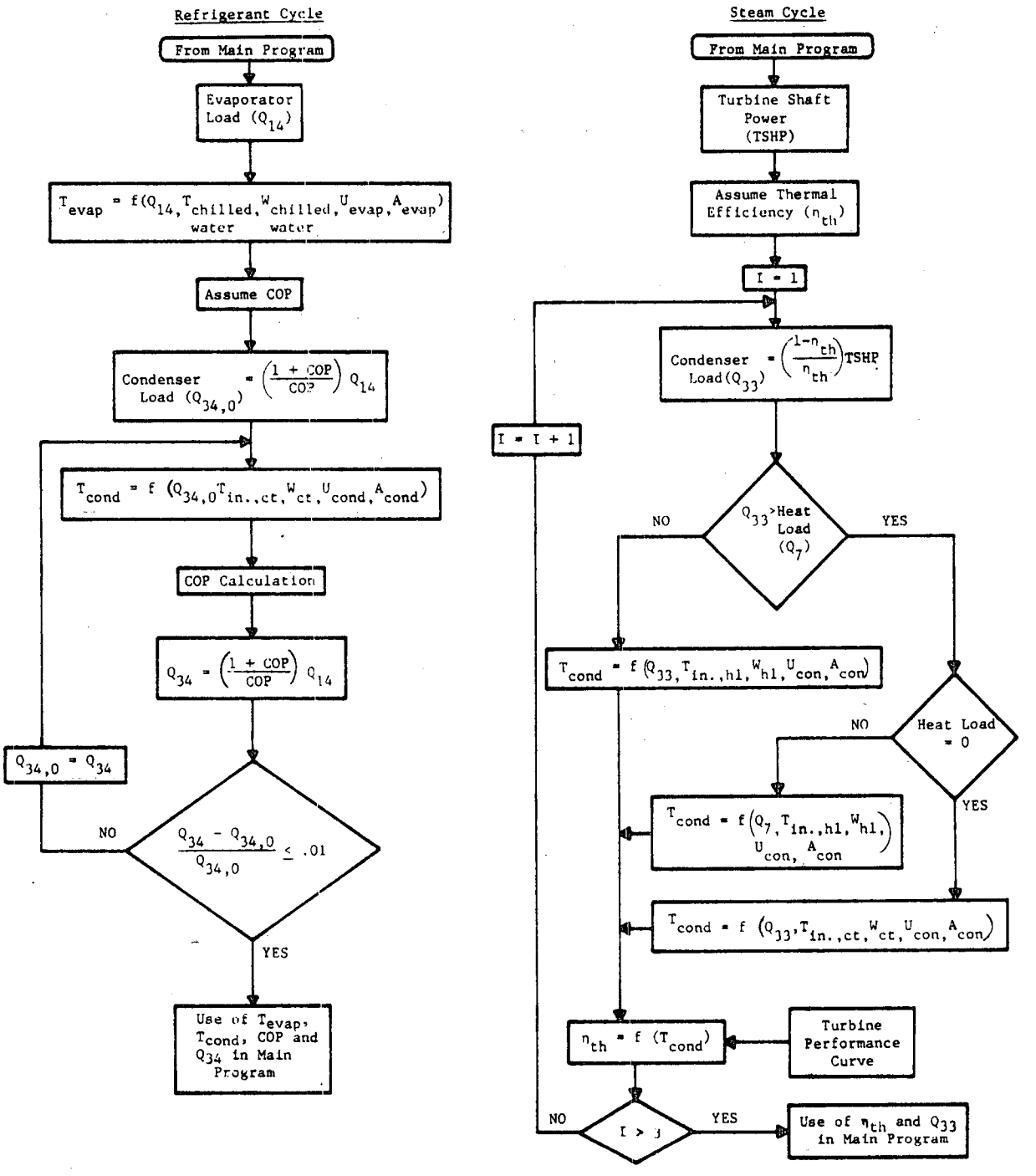

Chart 3

COP Calculation Efficiency Flow Chart

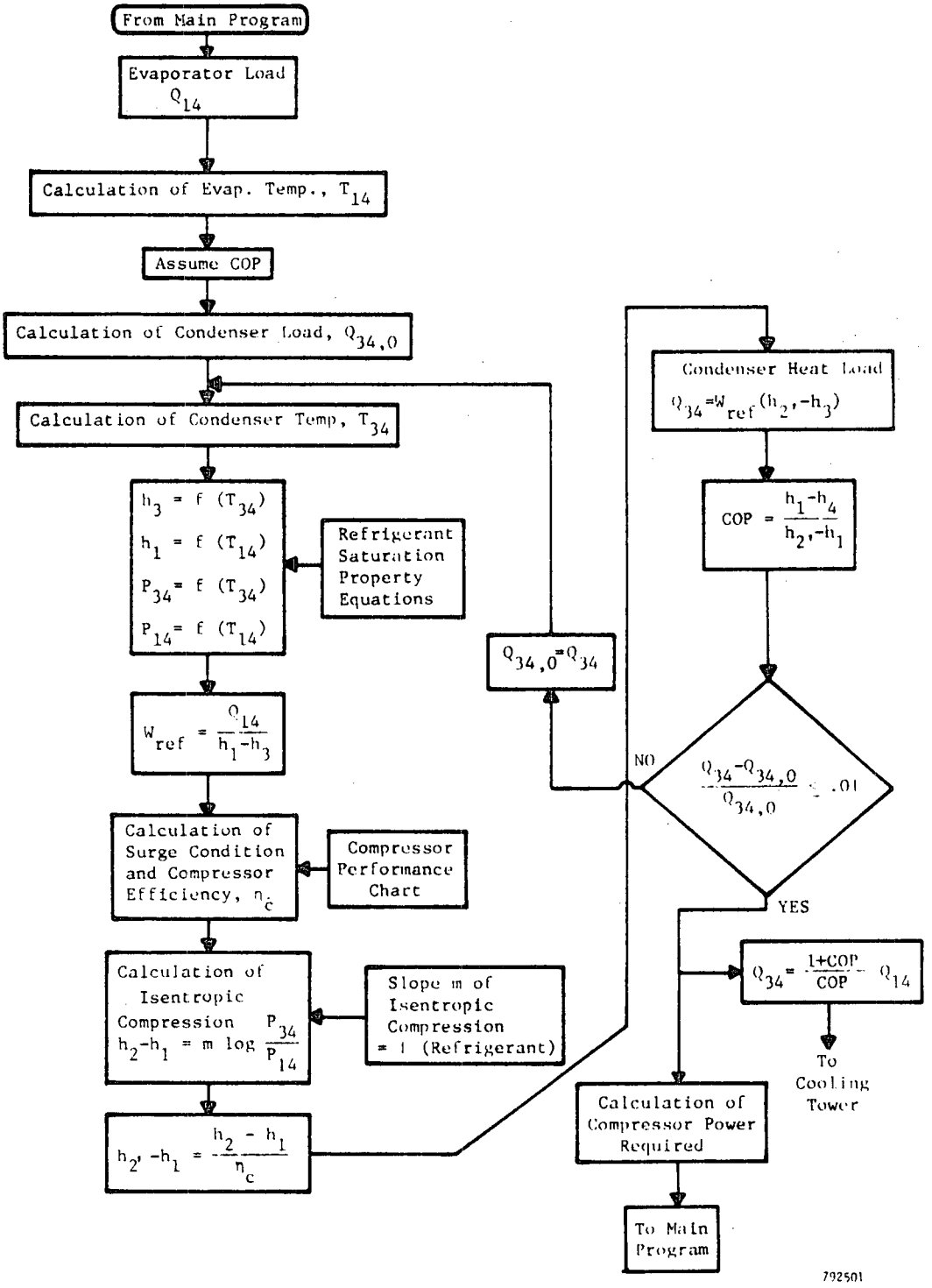

MECHANICAL TECHNOLOGY INCORPORATED

Chart 4

Compressor Efficiency Flow Chart

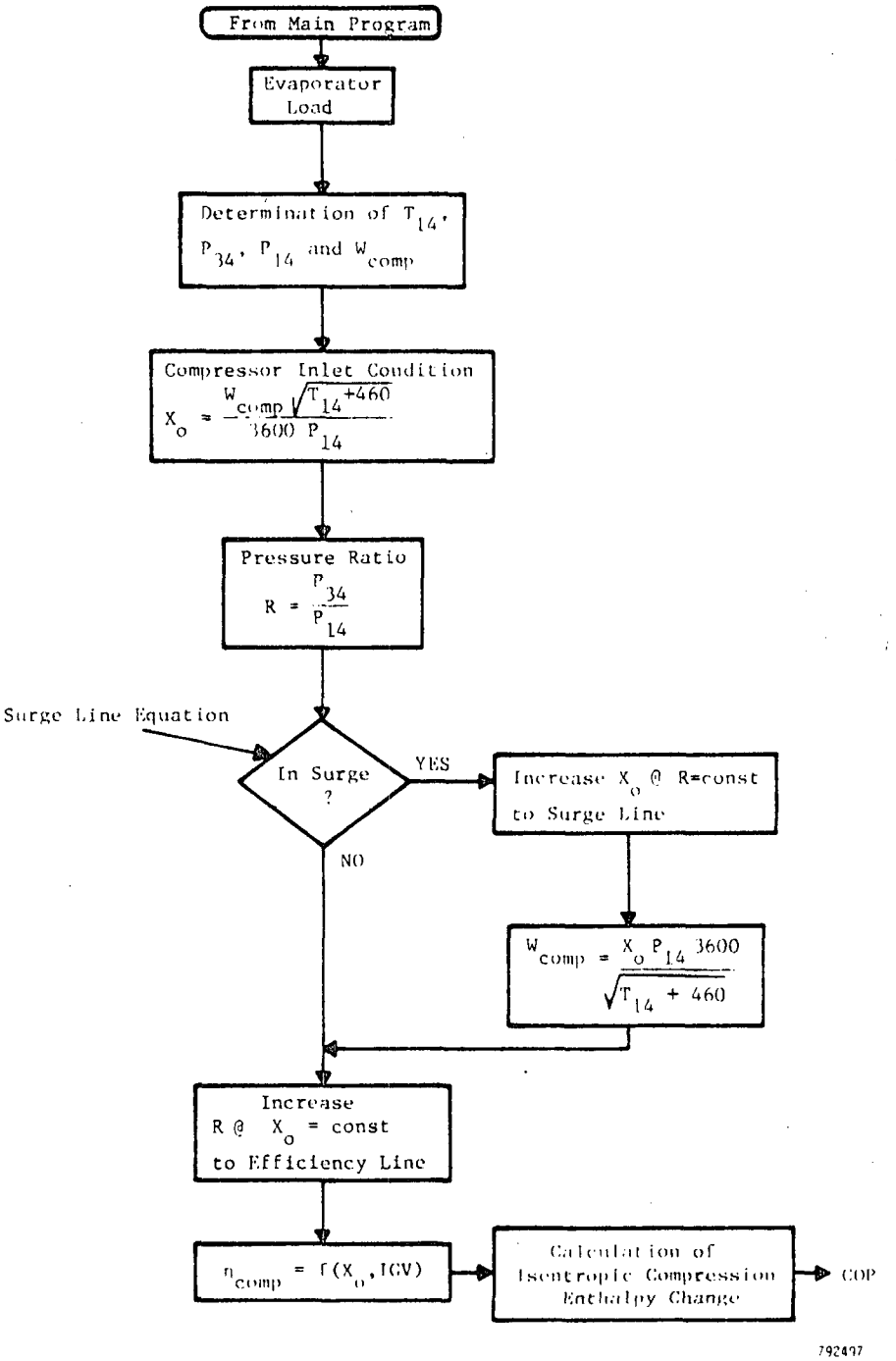

Chart 5

Prime-Mover Models Flow Chart

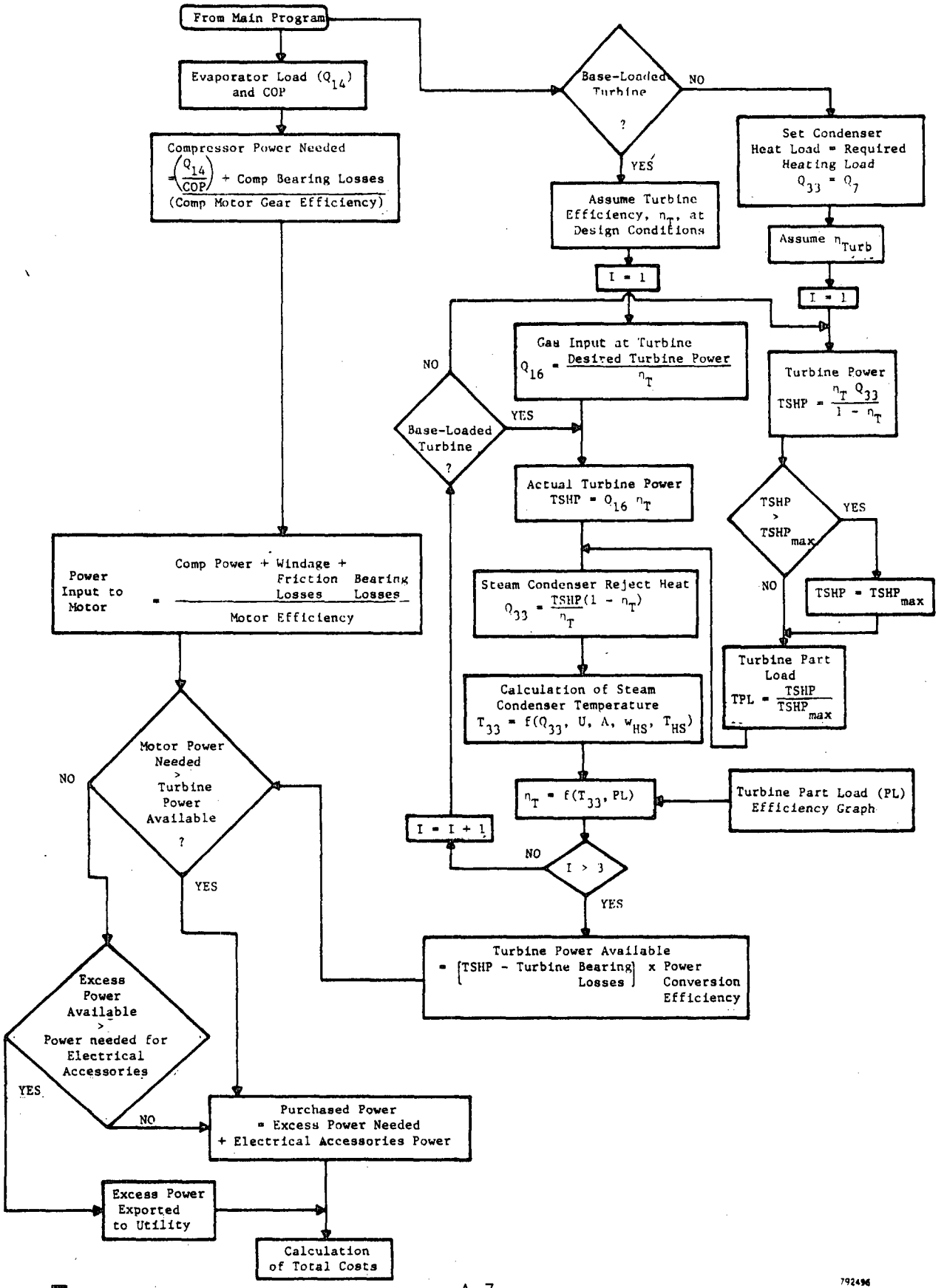

MECHANICAL TECHNOLOGY INCORPORATED

792496

Chart 6

Part-Load Turbine Operation

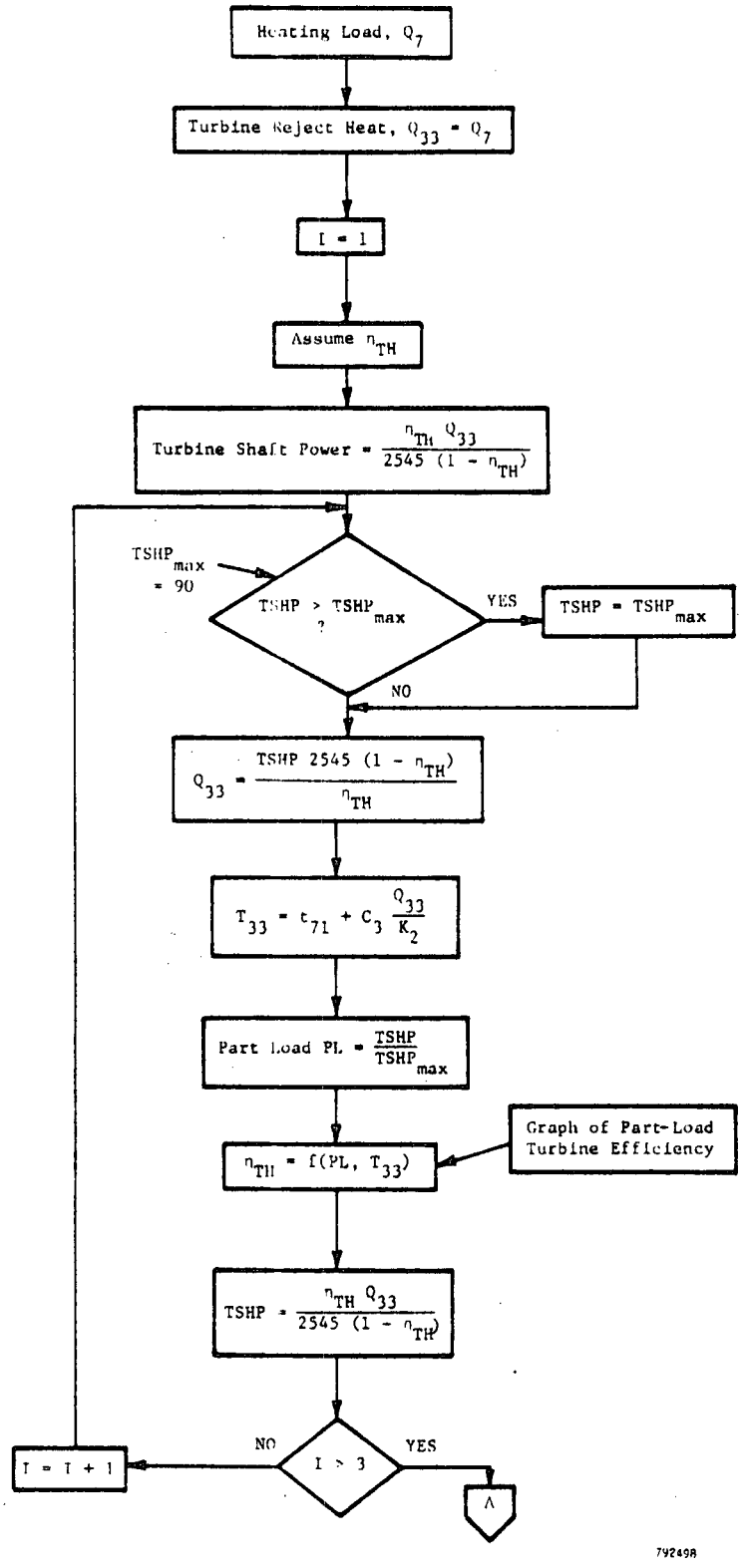

Chart 6 - Cont'd

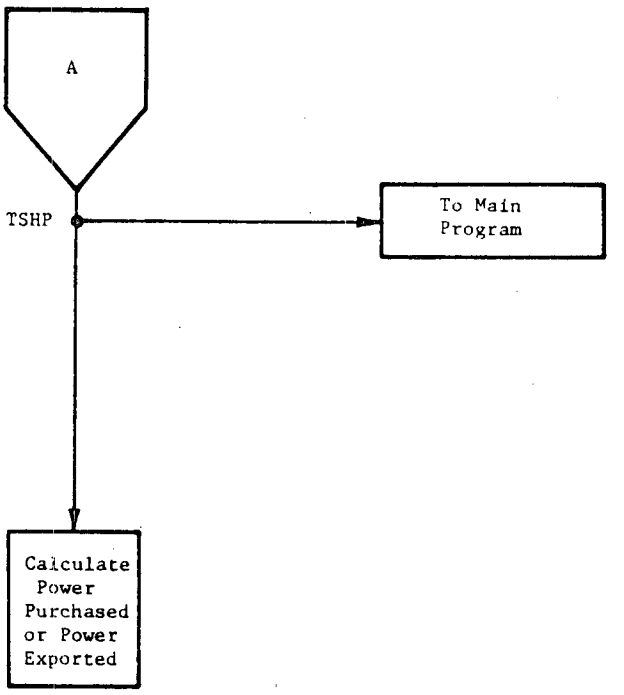

792475

ATTACHMENT B

DESCRIPTION OF BOX'S OPTIMIZATION ALGORITHM

Algorithm 454

The Complex Method for Constrained Optimization [E4]

Joel A. Richardson and J.L. Kuester* [Rec'd. Dec. 22, 1970 and May 5, 1971]
Arizona State University, Tempe, AZ 85281

Key Words and Phrases: optimization, constrained optimization, Box's algorithm
CR Categories: 5.41
Language: Fortran

Description

Purpose. This program finds the maximum of a multivariable, nonlinear function subject to constraints:

Maximize $F(X_1, X_2, \ldots, X_N)$
Subject to $G_k \leq X_k \leq H_k, \quad k = 1, 2, \ldots, M.$

The implicit variables $X_{N+1}, \ldots, X_M$ are dependent functions of the explicit independent variables $X_1, X_2, \ldots, X_N$. The upper and lower constraints H_k and G_k are either constants or functions of the independent variables.

Method. The program is based on the "complex" method of M.J. Box [2]. This method is a sequential search technique, which has proven effective in solving problems with nonlinear objective functions subject to nonlinear inequality constraints. No derivatives are required. The procedure should tend to find the global maximum because the initial set of points is randomly scattered throughout the feasible region. If linear constraints are present or equality constraints are involved, other methods should prove to be more efficient [1]. The algorithm proceeds as follows:

(1) An original "complex" of $K \geq N + 1$ points is generated consisting of a feasible starting point and $K - 1$ additional points generated from random numbers and constraints for each of the independent variables: $X_{i,j} = G_i + r_{i,j}(H_i - G_i)$, $i = 1, 2, \ldots, N$, and $j = 1, 2, \ldots, K - 1$, where $r_{i,j}$ are random numbers between 0 and 1.

(2) The selected points must satisfy both the explicit and implicit constraints. If at any time the explicit constraints are violated, the point is moved a small distance δ inside the violated limit. If an implicit constraint is violated, the point is moved one half of the distance to the centroid of the remaining points: $X_{i,j}(\text{new}) = (X_{i,j}(\text{old}) + \bar{X}_{i,c})/2$, $i = 1, 2, \ldots, N$, where the coordinates of the centroid of the remaining points, $\bar{X}_{i,c}$, are defined by

$$\bar{X}_{i,c} = \frac{1}{K-1}\left[\sum_{j=1}^{K} X_{i,j} - X_{i,j}(\text{old})\right], \quad i = 1, 2, \ldots, N.$$

This process is repeated as necessary until all the implicit constraints are satisfied.

(3) The objective-function is evaluated at each point. The point having the lowest function value is replaced by a point which is located at a distance α times as far from the centroid of the remaining points as the distance of the rejected point on the line joining the rejected point and the centroid:

$$X_{i,j}(\text{new}) = \alpha(\bar{X}_{i,c} - X_{i,j}(\text{old})) + \bar{X}_{i,c}, \quad i = 2, \ldots, N.$$

Box [2] recommends a value of $\alpha = 1.3$.

(4) If a point repeats in giving the lowest function value on consecutive trials, it is moved one half the distance to the centroid of the remaining points.

(5) The new point is checked against the constraints and is adjusted as before if the constraints are violated.

(6) Convergence is assumed when the objective function values at each point are within β units for γ consecutive iterations.

Program. The program consists of three general subroutines (*JCONSX, JCEK1, JCENT*) and two user supplied subroutines (*JFUNC, JCNST1*). The use of the program and the meaning of the parameters are described in the comments at the beginning of subroutine *JCONSX*. All communication between the main program and subroutines is achieved in the subroutine argument lists. An iteration is defined as the calculations required to select a new point which satisfies the constraints and does not repeat in yielding the lowest function value.

Test results. Several functions were chosen to test the program. The calculations were performed on a CDC 6400 computer. Some examples:

1. Box Problem [2]
   Function: $F = (9 - (X_1 - 3)^2)X_2^3/27\sqrt{3}$
   Constraints: $0 \leq X_1 \leq 100$
   $0 \leq X_2 \leq X_1/\sqrt{3}$
   $0 \leq (X_3 = X_1 + \sqrt{3}X_2) \leq 6$
   Starting point: $X_1 = 1.0$, $X_2 = 0.5$
   Parameters: $K = 4$, $\alpha = 1.3$, $\beta = .001$, $\gamma = 5$, $\delta = .0001$

Computed results	Correct results:
$F = 1.0000$	$F = 1.0000$
$X_1 = 3.0000$	$X_1 = 3.0000$
$X_2 = 1.7320$	$X_2 = 1.7321$

   Number of iterations: 68
   Central processor time: 6 sec.

2. Post Office Problem [3]
   Function: $F = X_1X_2X_3$
   Constraints: $0 \leq X_i \leq 42, \quad i = 1, 2, 3$
   $0 \leq (X_4 = X_1 + 2X_2 + 2X_3) \leq 72$
   Starting point: $X_1 = 1.0$, $X_2 = 1.0$, $X_3 = 1.0$
   Parameters: $K = 6$, $\alpha = 1.3$, $\beta = .01$, $\gamma = 5$, $\delta = .0001$

Computed results:	Correct results:
$F = 3456$	$F = 3456$
$X_1 = 24.01$	$X_1 = 24.00$
$X_2 = 12.00$	$X_2 = 12.00$
$X_3 = 12.00$	$X_3 = 12.00$

   Number of iterations. 72
   Central processor time: 6 sec.

* The authors acknowledge financial support from a National Science Foundation summer fellowship and Arizona State University Grants Committee fellowship. Computer facilities were provided by the Arizona State University Computer Center and AiResearch Manufacturing Company.

Beveridge and Schechter Problem [1]:

Function: $F = -(X_1 - 0.5)^2 - (X_2 - 1.0)^2$

Constraints: $-2 \le X_1 \le 2$

$-\sqrt{2} \le X_2 \le \sqrt{2}$

$-4 \le (X_2 - X_1^2 + 2X_2^2 - 4) \le 0$

Starting point: $X_1 = 0.$, $X_2 = 0.$

Parameters: $K = 4$, $\alpha = 1.3$, $\beta = .00001$, $\gamma = 5$, $\delta = .0001$

Computed results:	Correct results:
$F = .0000$	$F = .0000$
$X_1 = .5035$	$X_1 = .5000$
$X_2 = .9990$	$X_2 = 1.0000$

Number of iterations: 40

Central processor time = 5 sec.

References

1. Beveridge, G.S., and Schechter, R.S. *Optimization: Theory and Practice*. McGraw-Hill, New York, 1970.
2. Box, M.J. A new method of constrained optimization and a comparison with other methods. *Comp. J. 8* (1965), 42–52.
3. Rosenbrock, H.H. An automatic method for finding the greatest or least value of a function. *Comp. J. 3* (1960), 175–184.

Algorithm

```
      SUBROUTINE JCONSX(N, M, K, ITMAX, ALPHA, BETA, GAMMA,
     * DELTA, X, R, F, IT, IEV2, KO, G, H, XC, L)
C PURPOSE
C   TO FIND THE CONSTRAINED MAXIMUM OF A FUNCTION OF
C   SEVERAL VARIABLES BY THE COMPLEX METHOD OF M. J. BOX.
C   THIS IS THE PRIMARY SUBROUTINE AND COORDINATES THE
C   SPECIAL PURPOSE SUBROUTINES (JCEK1, JCENT, JFUNC,
C   JCNST1).  INITIAL GUESSES OF THE INDEPENDENT VARIABLES,
C   RANDOM NUMBERS, SOLUTION PARAMETERS, DIMENSION LIMITS
C   AND PRINTER CODE DESIGNATION ARE OBTAINED FROM THE MAIN
C   PROGRAM.  FINAL FUNCTION AND INDEPENDENT VARIABLE
C   VALUES ARE TRANSFERRED TO THE MAIN PROGRAM FOR
C   PRINTOUT.  INTERMEDIATE PRINTOUTS ARE PROVIDED IN THIS
C   SUBROUTINE. THE USER MUST PROVIDE THE MAIN PROGRAM AND
C   THE SUBROUTINES THAT SPECIFY THE FUNCTION (JFUNC) AND
C   CONSTRAINTS (JCNST1). FORMAT CHANGES MAY BE REQUIRED
C   WITHIN THIS SUBROUTINE DEPENDING ON THE PARTICULAR
C   PROBLEM UNDER CONSIDERATION.
C USAGE
C   CALL JCONSX(N,M,K,ITMAX,ALPHA,BETA,GAMMA,DELTA,X,R,F,
C   IT,IEV2,KO,G,H,XC,L)
C SUBROUTINES REQUIRED
C   JCEK1(N,M,K,X,G,H,I,KODE,XC,DELTA,L,K1)
C     CHECKS ALL POINTS AGAINST EXPLICIT AND IMPLICIT
C     CONSTRAINTS AND APPLYS CORRECTION IF VIOLATIONS ARE
C     FOUND
C   JCENT(N,M,K,IEV1,I,XC,X,L,K1)
C     CALCULATES THE CENTROID OF POINTS
C   JFUNC(N,M,K,X,F,I,L)
C     SPECIFIES OBJECTIVE FUNCTION (USER SUPPLIED)
C   JCNST1(N,M,K,X,G,H,I,L)
C     SPECIFIES EXPLICIT AND IMPLICIT CONSTRAINT LIMITS
C     (USER SUPPLIED).  ORDER EXPLICIT CONSTRAINTS FIRST
C DESCRIPTION OF PARAMETERS
C   N      NUMBER OF EXPLICIT INDEPENDENT VARIABLES - DEFINE
C          IN MAIN PROGRAM
C   M      NUMBER OF SETS OF CONSTRAINTS - DEFINE IN MAIN
C          PROGRAM
C   K      NUMBER OF POINTS IN THE COMPLEX - DEFINE IN MAIN
C          PROGRAM
C   ITMAX  MAXIMUM NUMBER OF ITERATIONS - DEFINE IN MAIN
C          PROGRAM
C   ALPHA  REFLECTION FACTOR - DEFINE IN MAIN PROGRAM
C   BETA   CONVERGENCE PARAMETER -  DEFINE IN MAIN PROGRAM
C   GAMMA  CONVERGENCE PARAMETER - DEFINE IN MAIN PROGRAM
C   DELTA  EXPLICIT CONSTRAINT VIOLATION CORRECTION - DEFINE
C          IN MAIN PROGRAM
C   X      INDEPENDENT VARIABLES - DEFINE INITIAL VALUES IN
C          MAIN PROGRAM
C   R      RANDOM NUMBERS BETWEEN 0 AND 1 - DEFINE IN MAIN
C          PROGRAM
C   F      OBJECTIVE FUNCTION - DEFINE IN SUBROUTINE JFUNC
C   IT     ITERATION INDEX - DEFINED IN SUBROUTINE JCONSX
C   IEV2   INDEX OF POINT WITH MAXIMUM FUNCTION VALUE -
C          DEFINED IN SUBROUTINE JCONSX
C   IEV1   INDEX OF POINT WITH MINIMUM FUNCTION VALUE -
C          DEFINED IN SUBROUTINE JCONSX AND JCEK1
C   KO     PRINTER UNIT NUMBER - DEFINE IN MAIN PROGRAM
C   G      LOWER CONSTRAINT - DEFINE IN SUBROUTINE JCNST1
C   H      UPPER CONSTRAINT - DEFINE IN SUBROUTINE JCNST1
C   XC     CENTROID - DEFINED IN SUBROUTINE JCENT
C   L      TOTAL NUMBER OF INDEPENDENT VARIABLES (EXPLICIT +
C          IMPLICIT) - DEFINE IN MAIN PROGRAM
C   I      POINT INDEX - DEFINED IN SUBROUTINE JCONSX
C   KODE   KEY USED TO DETERMINE IF IMPLICIT CONSTRAINTS ARE
C          PROVIDED - DEFINED IN SUBROUTINE JCONSX AND JCEK1
C          DO LOOP LIMIT - DEFINED IN SUBROUTINE JCONSX
      DIMENSION X(K,L), R(K,M), F(K), G(M), H(M), XC(N)
      INTEGER GAMMA
      IT = 1
      WRITE (KO,99995) IT
      KODE = 0
      IF (M-N) 20, 20, 10
   10 KODE = 1
   20 CONTINUE
      DO 40 II=2,K
        DO 30 J=1,N
          X(II,J) = 0.
   30   CONTINUE
   40 CONTINUE
C CALCULATE COMPLEX POINTS AND CHECK AGAINST CONSTRAINTS
      DO 60 II=2,K
        DO 50 J=1,N
          I = II
          CALL JCNST1(N, M, K, X, G, H, I, L)
          X(II,J) = G(J) + R(II,J)*(H(J)-G(J))
   50   CONTINUE
        K1 = II
        CALL JCEK1(N, M, K, X, G, H, I, KODE, XC, DELTA, L, K1)
        WRITE (KO,99999) II, (X(II,J),J=1,N)
   60 CONTINUE
      K1 = K
      DO 70 I=1,K
        CALL JFUNC(N, M, K, X, F, I, L)
   70 CONTINUE
      KOUNT = 1
      IA = 0
C FIND POINT WITH LOWEST FUNCTION VALUE
      WRITE (KO,99998) (F(I),I=1,K)
   80 IEV1 = 1
      DO 100 ICM=2,K
        IF (F(IEV1)-F(ICM)) 100, 100, 90
   90   IEV1 = ICM
  100 CONTINUE
C FIND POINT WITH HIGHEST FUNCTION VALUE
      IEV2 = 1
      DO 120 ICM=2,K
        IF (F(IEV2)-F(ICM)) 110, 110, 120
  110   IEV2 = ICM
  120 CONTINUE
C CHECK CONVERGENCE CRITERIA
      IF (F(IEV2)-(F(IEV1)+BETA)) 140, 130, 130
  130 KOUNT = 1
      GO TO 150
  140 KOUNT = KOUNT + 1
      IF (KOUNT-GAMMA) 150, 240, 240
C REPLACE POINT WITH LOWEST FUNCTION VALUE
  150 CALL JCENT(N, M, K, IEV1, I, XC, X, L, K1)
      DO 160 J=1,N
        X(IEV1,J) = (1.+ALPHA)*(XC(J)) - ALPHA*(X(IEV1,J))
  160 CONTINUE
      I = IEV1
      CALL JCEK1(N, M, K, X, G, H, I, KODE, XC, DELTA, L, K1)
      CALL JFUNC(N, M, K, X, F, I, L)
C REPLACE NEW POINT IF IT REPEATS AS LOWEST FUNCTION VALUE
  170 IEV2 = 1
      DO 190 ICM=2,K
        IF (F(IEV2)-F(ICM)) 190, 190, 180
  180   IEV2 = ICM
  190 CONTINUE
      IF (IEV2-IEV1) 220, 200, 220
  200 DO 210 JJ=1,N
        X(IEV1,JJ) = (X(IEV1,JJ)+XC(JJ))/2.
  210 CONTINUE
      I = IEV1
      CALL JCEK1(N, M, K, X, G, H, I, KODE, XC, DELTA, L, K1)
      CALL JFUNC(N, M, K, X, F, I, L)
      GO TO 170
  220 CONTINUE
      WRITE (KO,99997) (X(IEV1,JB),JB=1,N)
      WRITE (KO,99998) (F(I),I=1,K)
      WRITE (KO,99996) (XC(J),J=1,N)
      IT = IT + 1
      IF (IT-ITMAX) 230, 230, 240
  230 CONTINUE
      WRITE (KO,99995) IT
      GO TO 80
  240 RETURN
99999 FORMAT(1H , 15X, 21H COORDINATES AT POINT, I4/8(F8.4, 2X))
99998 FORMAT(1H , 20X, 16H FUNCTION VALUES, /8(F10.4, 2X))
99997 FORMAT(1H , 20X, 16H CORRECTED POINT, /8(F8.4, 2X))
99996 FORMAT(1H , 21H CENTROID COORDINATES, 2X, 8(F8.4, 2X))
99995 FORMAT(1H , //10H ITERATION, 4X, I5)
      END

      SUBROUTINE JCEK1(N, M, K, X, G, H, I, KODE, XC, DELTA, L,
     * K1)
C PURPOSE
C   TO CHECK ALL POINTS AGAINST THE EXPLICIT AND IMPLICIT
C   CONSTRAINTS AND TO APPLY CORRECTIONS IF VIOLATIONS ARE
C   FOUND
C USAGE
C   CALL JCEK1(N,M,K,X,G,H,I,KODE,XC,DELTA,L,K1)
C SUBROUTINES REQUIRED
C   JCENT(N,M,K,IEV1,I,XC,X,L,K1)
C   JCNST1(N,M,K,X,G,H,I,L)
C DESCRIPTION OF PARAMETERS
C   PREVIOUSLY DEFINED IN SUBROUTINE JCONSX
      DIMENSION X(K,L), G(M), H(M), XC(N)
   10 KT = 0
      CALL JCNST1(N, M, K, X, G, H, I, L)
C CHECK AGAINST EXPLICIT CONSTRAINTS
      DO 50 J=1,N
        IF (X(I,J)-G(J)) 20, 20, 30
   20   X(I,J) = G(J) + DELTA
        GO TO 50
   30   IF (H(J)-X(I,J)) 40, 40, 50
   40   X(I,J) = H(J) - DELTA
   50 CONTINUE
      IF (KODE) 110, 110, 60
C CHECK AGAINST THE IMPLICIT CONSTRAINTS
   60 CONTINUE
      NN = N + 1
      DO 100 J=NN,M
        CALL JCNST1(N, M, K, X, G, H, I, L)
        IF (X(I,J)-G(J)) 80, 70, 70
```

```
   70   IF (M(J)-X(I,J)) 80, 100, 100
   80   IEVI = I
        KT = 1
        CALL JCENT(N, M, K, IEVI, I, XC, X, L, K1)
        DO 90 JJ=1,N
          X(I,JJ) = (X(I,JJ)+XC(JJ))/2.
   90   CONTINUE
  100 CONTINUE
      IF (KT) 110, 110, 10
  110 RETURN
      END

      SUBROUTINE JCENT(N, M, K, IEVI, I, XC, X, L, K1)
C PURPOSE
C   TO CALCULATE THE CENTROID OF POINTS
C USAGE
C   CALL JCENT(N,M,K,IEVI,I,XC,X,L,K1)
C SUBROUTINES REQUIRED
C   NONE
C DESCRIPTION OF PARAMETERS
C   PREVIOUSLY DEFINED IN SUBROUTINE JCONSX
      DIMENSION X(K,L), XC(N)
      DO 20 J=1,N
        XC(J) = 0.
        DO 10 IL=1,K1
          XC(J) = XC(J) + X(IL,J)
   10   CONTINUE
        RK = K1
        XC(J) = (XC(J)-X(IEVI,J))/(RK-1.)
   20 CONTINUE
      RETURN
      END
```

Remark on Algorithm 454 [E4]
The Complex Method for Constrained Optimization [Joel A. Richardson and J.L. Kuester, *Comm. ACM 16* (Aug. 1973), 487–489]

Kenneth D. Shere [Recd. 8 Oct. 1973]
Mathematical Analysis Division, Naval Ordnance Laboratory, Silver Spring, MD 20910

This algorithm can result in an infinite loop. This happens whenever the "corrected point," the centroid of the remaining "complex" points, and every point on the line segment joining these two points all have functional values lower than the functional values at each of the remaining complex points. Two examples for which this algorithm fails are [1] and [2]:

1. maximize $f(x) = -100(x_2 - x_1^2)^2 - (1 - x_1)^2$
   $-10 \leq x_1, x_2 \leq 10$, initial value $(x_1, x_2) = (-2.5, 5.0)$

and

2. maximize
   $f(\theta, \phi) = 0.2\,(\sin(\theta_0)\cos(\phi_0)\sin(\theta)\cos(\phi) + \sin(\theta_0)\sin(\phi_0)\sin(\theta)\sin(\phi) + \cos(\theta_0)\cos(\theta)) - 1.0\,(\sin^2(\theta)\cos^2(\theta) + \cos^2(\phi)\sin^2(\phi)\sin^4(\theta))$
   $0 \leq \theta, \phi \leq \pi/2$, $(\theta_0, \phi_0) = (.8726, .0873)$,
   initial $(\theta, \phi) = (\pi/4, \pi/4)$

Also, there is no difference in usage between *M* and *L*.

A similar method is the "simplex method" [3]. A modification to the "complex method" which uses the ideas of [3] has been programmed. The modified *JCONSX* solves each of the above problems in under 5 CP sec on a CDC 6400. The modified routine is available to interested parties upon request.

It is also worth noting that the variable *IA*, which appears in the second statement after 70 *CONTINUE* is not used elsewhere.

References

1. Rosenbrock, H.H. An automatic method for finding the greatest or least value of a function. *Comput. J. 3* (1960), 175–184.
2. Ferguson, R.E. An electromagnetism problem. (Private communication.)
3. Parkinson, J.M., and Hutchinson, D. An investigation into the efficiency of variants on the simplex method. In *Numerical Methods for Nonlinear Optimization*, F.A. Lootsma, Ed., Academic Press, New York, 1972.

ATTACHMENT C

MECHANICAL DRIVE CONCEPT MODEL - PROGRAM LISTING

```
      PROGRAM PERCNG(INPUT,OUTPUT,B,TAPE5=INPUT,TAPE6=OUTPUT,TAPE7=B)
      COMMON/TGCM/ETACON,ETAMM,ETAGG,FLMC,FLTS,Q16,FLWF,ETA1,ETAG,T14
C     ***********************************************************
C     *                                                         *
C     *   THIS IS CONCEPT A2-B (V)                              *
C     *   MECHANICAL COUPLING WITH CLUTCH                       *
C     *   FOR USE WITH FREON R-12                               *
C     *   FEBRUARY 25, 1979      BILL LOSS - MTI                *
C     *                                                         *
C     ***********************************************************
      COMMON/TVAL/COPC1(10),VT1C1(10),CF1(10),PWR1(10),
     +            COPC2(10),VT1C2(10),CF2(10),PWR2(10),
     +            VETH(10),VT1ETH(10),CFE(10),PWRE(10)
      COMMON/CONTR/NSTART,NCASES,NCOPC1,ICOPC1,TITLE(50),
     +             NCOPC2,ICOPC2,NETH,IETH,NEXT,NCF1,
     +             NCF2,NCFE
      COMMON/SVALGL/XNP,ETAGEN,ETAM,ETAB,TV,MDIAG,PCT,
     +              DTAIR,SCFMOL,SCFMVL,E7,IE(7),SV(10),
     +              S08(10),SCFMV,EPSV
      COMMON/ELEC/SEVEN,LOADEDT,XMSHP,TPKW,XNMGLD,EXPKW,
     +            GENLD,XMPKW,PURNEW,GENNEW
      COMMON/CALC/K,Q14,Q1,Q12,Q13,Q15,Q34,X,TSHP,Q33,Q9,
     +            Q5,Q11,Q8,C1,C2,ETH,Q7,ACCPWR,AINPWR,
     +            PCPWR,T1,SCFMEC,ECMAX,Q24,Q8T,Q8TM,Q12M,
     +            Q14M,Q5M,NSPM
      COMMON/SU/E1CON1,E2CON1,NP,E2CON2,E2CON3,E3CON1,E3CON3,
     +          E4CON1,E5CON1,E5CON2,E6CON1,SCFMOUT,E(7)
      COMMON/CORFAC/C1FAC,C2FAC,CFFAC,DAYNO,HOURNO,FLAG
      COMMON/IODEV/IN,OUT
      COMMON/XNLOAD/XNPC1,XNPC2,XNPT,AC1,AC2,AETH,NDUAL,
     +              NREV,XNPBS,XNPBL,XNPBH,XKOA,XNPB,
     +              XNPNB,PLOAD,XNBLD,GCF,ECF,DRATE
      COMMON/SCALC/T33,T34,T0,U73,U74,U83,U84,A73,A74,A83,A84,
     +             G7,G8,TWB,DT,T71,T73,TA1,T72,TA2,TA3,DTA2TB1
      COMMON/S2CALC/KFLAG,X3OLD,X3,DOTOLD,DOTM,R,NR,ETAD
      COMMON/S3CALC/G1,A14,U14,T12,H34AD
      DIMENSION TR(11),WB(11)
      INTEGER DAYNO,HOURNO,OUT
      DATA ACCPWR,E1CON1,E2CON1,E2CON2/2545.0,0.0000054,0.4,3.0/
      DATA E2CON3,E3CON1,E3CON3/.66,.0325,0.00000097/
      DATA E4CON1,E5CON1,E5CON2,E6CON1/0.00007,0.000181,74.0,0.00016/
      DATA Q13CON1,Q13CON2,Q12CON1/1.08,50.,1.08/
      DATA TR/5.,15.,25.,35.,45.,55.,65.,75.,85.,95.,105./
      DATA WB/4.8,14.3,23.7,32.,41.2,50.5,58.5,64.6,69.3,73.,75./
      NTWB=11
      IN=5
      OUT=6
C   READ IN GLOBAL VARIABLES
5     CALL GLOBIN
C
C---SET VALUES TO RUN (NON) PERF MODEL
      Q12M=Q12CON1*SCFMOL*DTAIR
      Q5M=Q8TM
      IF(NSPM.EQ.0) NDUAL=NREV=NCOPT=LOADEDT=0
      IF(NSPM.EQ.0) XNPC1=XNPC2=XNPT=.01
      IF(NSPM.EQ.0) Q12M=Q14M=.01
C   WRITE OUT GLOBAL PARAMETERS
      CALL GLBOUT
C
C---INITIALIZE TOTALS AND MAXS
      GCF=GCF/1000000.
      COG=COEP=CREP=AUDC=TAOPC=0.0
      BTUS=TOTQ14=Q14MAX=TPMAX=SCOST=TOTQ9=0.0
```

```
      Q933MAX=0.0                                                       PERCNG    65
      Q34MAX=Q33MAX=Q11MAX=Q8TMAX=Q5MAX=0.0                             PERCNG    66
      Q1MAX=Q7MAX=0.                                                    PERCNG    67
      Q15MAX=Q13MAX=Q12MAX=Q9MAX=0.0                                    PERCNG    68
      TMAX=C1MAX=C2MAX=0.0                                              PERCNG    69
      TC1=TC2=THR=C1HR=C2HR=0.0                                         PERCNG    70
      TOTBTUE=TOTKW=0.0                                                 PERCNG    71
      TOTQ8T=TOTQ12=TOTQ13=0.0                                          PERCNG    72
      GENMAX=XMSMAX=TOTQ1=TOTQ7=0.0                                     PERCNG    73
      TOTQ24=TOTQ15=TOTKWU=TOTKWM=TOTKWF=0.0                            PERCNG    74
      SAVEVL=SCFMVL                                                     PERCNG    75
C   GO THROUGH THE NUMBER OF CASES                                      PERCNG    76
      DO 11 N=1,NCASES                                                  PERCNG    77
      WRITE(OUT,33)                                                     PERCNG    78
C   READ IN VALUES FOR T1,Q1,Q7                                         PERCNG    79
      READ(IN,25) DAYNO,HOURNO,T1,Q1,Q7                                 PERCNG    80
      IF(Q1.EQ.(0.).AND.Q7.EQ.(0.)) GO TO 11                            PERCNG    81
      OUT=7                                                             PERCNG    82
      IF(DAYNO.NE.0) OUT=6                                              PERCNG    83
C                                                                       PERCNG    84
C---LOAD SCALING FACTOR                                                 PERCNG    85
      Q1=Q1*(.714)                                                      PERCNG    86
      Q7=Q7*(.714)                                                      PERCNG    87
C                                                                       PERCNG    88
C---RESET VARIABLES FOR EACH CASE                                       PERCNG    89
      XMSHP=XMPKW=TPKW=XNMGLD=EXPKW=GENLD=0.0                           PERCNG    90
      PURNEW=GENNEW=0.0                                                 PERCNG    91
      Q9=Q12=Q13=Q15=0.0                                                PERCNG    92
      Q8T=1.                                                            PERCNG    93
      SCFMEC=0.0                                                        PERCNG    94
      SCFMOUT=SCFMV=0.0                                                 PERCNG    95
      T72=T81=T82=T83=0.0                                               PERCNG    96
      T71=CT33=DT82T81=0.0                                              PERCNG    97
      XKOA=1.0                                                          PERCNG    98
      XNP8L=XNP8=XNPC1                                                  PERCNG    99
      XNP8H=XNPN8=XNPC2                                                 PERCNG   100
C                                                                       PERCNG   101
C---COPC1,COPC2,ETATH                                                   PERCNG   102
      CALL TLU(T1,AC1,VT1C1,COPC1,NCOPC1)                               PERCNG   103
      CALL TLU(T1,AETH,VT1ETH,VETH,NETH)                                PERCNG   104
      C1=AC1                                                            PERCNG   105
      ETH=AETH                                                          PERCNG   106
C                                                                       PERCNG   107
      CALL TLU(T1,TWB,TR,WB,NTWB)                                       PERCNG   108
C---IS IT POSSIBLE TO ECONOMIZE COOLING                                 PERCNG   109
      IF(T1.GT.(62.).OR.Q1.EQ.(0.)) GO TO 150                           PERCNG   110
C                                                                       PERCNG   111
C---Q15 PATH-ECONOMIZE COOLING                                          PERCNG   112
      IF(T1.LT.(50.))GO TO 125                                          PERCNG   113
      Q15MAX=Q1*(TV-T1)/(TV-(50.))                                      PERCNG   114
      SCFMEC=(Q15MAX/1.08)/(TV-T1)                                      PERCNG   115
      IF(SCFMEC.GT.ECMAX) SCFMEC=ECMAX                                  PERCNG   116
      Q15=(1.08)*(SCFMEC)*(TV-T1)                                       PERCNG   117
      GO TO 150                                                         PERCNG   118
  125 SCFMEC=(Q1/1.08)/(TV-T1)                                          PERCNG   119
      IF(SCFMEC.GT.ECMAX) SCFMEC=ECMAX                                  PERCNG   120
      Q15=(1.08)*(SCFMEC)*(TV-T1)                                       PERCNG   121
  150 Q24=Q1-Q15                                                        PERCNG   122
      SCFMVL=SAVEVL+SCFMEC                                              PERCNG   123
      K=0                                                               PERCNG   124
      CALL CALCU                                                        PERCNG   125
  155 PQ8=Q8                                                            PERCNG   126
      CALL CALCU                                                        PERCNG   127
```

```
      IF((ABS(PQ8-Q8)).GT.PCT) GO TO 155
      IF(Q8.LT.0) GO TO 200
  170 PQ8=Q8
C
C---Q8T PATH-COOLING LOAD TOWER
      Q8T=Q8
      CALL CALCU
      CALL CALCU
      CALL CALCU
      IF((ABS(PQ8-Q8)).GT.PCT) GO TO 170
      FLAG=5
      GO TO 99
C
C---Q13 PATH-ADD VENTILATING AIR FLOW
  200 X1=SCFMV
      Y1=Q8
      SCFMV=SCFMVL
      K=0
      Q13=Q13CON1*SCFMV*EPSV*(TV-Q13CON2)
      Q8T=0.0
      CALL CALCU
  201 PQ8=Q8
      CALL CALCU
      IF((ABS(PQ8-Q8)).GT.PCT) GO TO 201
      IF(Q8.LT.0) GO TO 300
      X2=SCFMV
      Y2=Q8
      SCFMV=1.
      Q13=Q13CON1*SCFMV*EPSV*(TV-Q13CON2)
  211 PQ8=Q8
      CALL CALCU
      IF((ABS(PQ8-Q8)).GT.PCT) GO TO 211
      IF(Q8.GT.0) GO TO 206
  202 S=(Y2-Y1)/(X2-X1)
      B=Y1-X1*S
      SCFMV=X2-(X2*S+B)/S
      Q13=Q13CON1*SCFMV*EPSV*(TV-Q13CON2)
      XNPB=XNPBL
      XNPNB=XNPBH
  203 PQ8=Q8
      CALL CALCU
      IF((ABS(PQ8-Q8)).GT.PCT) GO TO 203
      IF(ABS(Q8).LT.(10.)) GO TO 204
      X2=X1
      Y2=Y1
      X1=SCFMV
      Y1=Q8
      GO TO 202
  204 XNPB=XNPBL
      XNPNB=XNPBH
  205 PQ8=Q8
      CALL CALCU
      IF((ABS(PQ8-Q8)).GT.PCT) GO TO 205
      FLAG=2
      IF(SCFMV.LT.(0.)) GO TO 206
      GO TO 99
  206 SCFMV=0.0
      Q13=Q13CON1*SCFMV*EPSV*(TV-Q13CON2)
  207 PQ8=Q8
      CALL CALCU
      IF((ABS(PQ8-Q8)).GT.PCT) GO TO 207
      GO TO 400
C
```

```
C---Q12 PATH-ADD OUTSIDE AIR FLOW                                    PERCNG   191
  300 X1=SCFMOUT                                                     PERCNG   192
      Y1=Q8                                                          PERCNG   193
      SCFMOUT=SCFMOL                                                 PERCNG   194
      K=0                                                            PERCNG   195
      Q12=Q12CON1*SCFMOUT*DTAIR                                      PERCNG   196
      CALL CALCU                                                     PERCNG   197
  301 PQ8=Q8                                                         PERCNG   198
      CALL CALCU                                                     PERCNG   199
      IF((ABS(PQ8-Q8)).GT.PCT) GO TO 301                             PERCNG   200
      IF(Q8.LT.0) GO TO 400                                          PERCNG   201
      SCFMOUT=SCFMOUT/40.                                            PERCNG   202
      CALL CALCU                                                     PERCNG   203
  309 PQ8=Q8                                                         PERCNG   204
      CALL CALCU                                                     PERCNG   205
      IF((ABS(PQ8-Q8)).GT.PCT) GO TO 309                             PERCNG   206
      X2=SCFMOUT                                                     PERCNG   207
      Y2=Q8                                                          PERCNG   208
  302 S=(Y2-Y1)/(X2-X1)                                              PERCNG   209
      B=Y1-X1*S                                                      PERCNG   210
      SCFMOUT=X2-(X2*S+P)/S                                          PERCNG   211
      Q12=Q12CON1*SCFMOUT*DTAIR                                      PERCNG   212
  303 PQ8=Q8                                                         PERCNG   213
      CALL CALCU                                                     PERCNG   214
      IF((ABS(PQ8-Q8)).GT.PCT) GO TO 303                             PERCNG   215
      IF(ABS(Q8).LT.(10.)) GO TO 304                                 PERCNG   216
      X2=X1                                                          PERCNG   217
      Y2=Y1                                                          PERCNG   218
      X1=SCFMOUT                                                     PERCNG   219
      Y1=Q8                                                          PERCNG   220
      GO TO 302                                                      PERCNG   221
  304 FLAG=3                                                         PERCNG   222
      IF(SCFMOUT.LT.(0.)) GO TO 305                                  PERCNG   223
      GO TO 99                                                       PERCNG   224
  305 SCFMOUT=0.0                                                    PERCNG   225
      Q12=Q12CON1*SCFMOUT*DTAIR                                      PERCNG   226
  306 PQ8=Q8                                                         PERCNG   227
      CALL CALCU                                                     PERCNG   228
      IF((ABS(PQ8-Q8)).GT.PCT) GO TO 306                             PERCNG   229
      GO TO 400                                                      PERCNG   230
C                                                                    PERCNG   231
C---Q9 PATH-ADD DIRECT STEAM                                         PERCNG   232
  400 K=0                                                            PERCNG   233
  401 PQ9=Q9                                                         PERCNG   234
      BQ8=Q8                                                         PERCNG   235
      Q9=Q9+ABS(Q8)                                                  PERCNG   236
  402 PQ8=Q8                                                         PERCNG   237
      CALL CALCU                                                     PERCNG   238
      IF((ABS(PQ8-Q8)).GT.PCT) GO TO 402                             PERCNG   239
      IF(Q8.LT.0) GO TO 401                                          PERCNG   240
      FQ9=(-Q8/((BQ8-Q8)/(PQ9-Q9)))+Q9                               PERCNG   241
      Q9=FQ9                                                         PERCNG   242
      CALL CALCU                                                     PERCNG   243
  403 PQ8=Q8                                                         PERCNG   244
      CALL CALCU                                                     PERCNG   245
      IF((ABS(PQ8-Q8)).GT.PCT) GO TO 403                             PERCNG   246
      FLAG=4                                                         PERCNG   247
C                                                                    PERCNG   248
   99 CONTINUE                                                       PERCNG   249
C---OUTPUT                                                           PERCNG   250
C                                                                    PERCNG   251
      CALL CASOUT                                                    PERCNG   252
C                                                                    PERCNG   253
```

```
C---SAVE TOTALS AND MAXS
      CMP1=Q12/(C1*2545.)
      CMP2=Q14/(C2*2545.)
      IF(TSHP.GT.TMAX) TMAX=TSHP
      IF(GENLD.GT.GENMAX) GENMAX=GENLD
      IF(XMSHP.GT.XMSMAX) XMSMAX=XMSHP
      IF(TPKW.GT.TPMAX) TPMAX=TPKW
      IF(CMP1.GT.C1MAX) C1MAX=CMP1
      IF(Q1.GT.Q1MAX) Q1MAX=Q1
      IF(Q7.GT.Q7MAX) Q7MAX=Q7
      IF(CMP2.GT.C2MAX) C2MAX=CMP2
      IF(Q34.GT.Q34MAX) Q34MAX=Q34
      IF(Q33.GT.Q33MAX) Q33MAX=Q33
      IF((Q33+Q9).GT.Q933MAX) Q933MAX=Q33+Q9
      IF(Q11.GT.Q11MAX) Q11MAX=Q11
      IF(Q8T.GT.Q8TMAX) Q8TMAX=Q8T
      IF(Q5.GT.Q5MAX) Q5MAX=Q5
      IF(Q15.GT.Q15MAX) Q15MAX=Q15
      IF(Q14.GT.Q14MAX) Q14MAX=Q14
      IF(Q13.GT.Q13MAX) Q13MAX=Q13
      IF(Q12.GT.Q12MAX) Q12MAX=Q12
      IF(Q9.GT.Q9MAX) Q9MAX=Q9
      TC1=TC1+(CMP1*HOURNO)
      TC2=TC2+(CMP2*HOURNO)
      IF(CMP1.GT.(.1)) C1HR=C1HR+HOURNO
      IF(CMP2.GT.(.1)) C2HR=C2HR+HOURNO
      THR=THR+HOURNO
      TIMEKW=SUME(1)*HOURNO
      TIMEBTU=3413.*((GENNEW+EXPKW)*HOURNO)/(ETAGEN*ETAM*ETAB*ETH)
      TOTKW=TOTKW+TIMEKW
      TOTBTUE=TOTBTUE+TIMEBTU
      BTUS=BTUS+(Q11*HOURNO)
      TOTQ8T=TOTQ8T+(Q8T*HOURNO)
      TOTQ12=TOTQ12+(Q12*HOURNO)
      TOTQ13=TOTQ13+(Q13*HOURNO)
      TOTQ14=TOTQ14+(Q14*HOURNO)
      TOTQ1=TOTQ1+(Q1*HOURNO)
      TOTQ7=TOTQ7+(Q7*HOURNO)
      TOTQ24=TOTQ24+(Q24*HOURNO)
      TOTQ9=TOTQ9+(Q9*HOURNO)
      TOTQ15=TOTQ15+(Q15*HOURNO)
      TOTKWU=TOTKWU+(PURNEW*HOURNO)
      TOTKWM=TOTKWM+(TPKW*HOURNO)
      TOTKWE=TOTKWE+(EXPKW*HOURNO)
C
C---END LOOP - NEXT CASE
   11 CONTINUE
C
C---DROP OUT - WRITE TOTALS AND MAXS
      OUT=6
      WRITE(OUT,56) TOTQ1,TOTQ7,TOTQ24,BTUS,TOTQ15,TOTKW,
     +  TOTKWU,TOTKWM,TOTKWE,TOTBTUE,TOTQ8T,TOTQ12,TOTQ13,TOTQ9
      WRITE(OUT,624) TC1,TC2,C1HR,C2HR,THR
      WRITE(OUT,324) TMAX,XMSMAX,GENMAX,C1MAX,C2MAX,TPMAX,
     +               Q34MAX,Q33MAX,Q11MAX,Q8TMAX,Q5MAX,
     +               Q15MAX,Q14MAX,Q13MAX,Q12MAX,Q933MAX,Q9MAX
C
      WRITE(OUT,700) Q1MAX,Q7MAX
C---OPERATING COST
      COG=GCF*BTUS
      COEP=ECF*TOTKWM
      CPEP=ECF*TOTKWE
      AUDC=TPMAX*DRATE*12.
```

```
      TAOPC=(COG+COLP+AUDC)-CREP                                        PERCNG    317
      WRITE(OUT,524) COG,COEP,CREP,AUDC,TAOPC                           PERCNG    318
C                                                                       PERCNG    319
C  SEE IF THERE IS MORE INPUT                                           PERCNG    320
      IF(NEXT.EQ.1)GO TO 5                                              PERCNG    321
C                                                                       PERCNG    322
C   FORMATS                                                             PERCNG    323
   56 FORMAT(1H1,///,"   TOTAL =",F20.1," BTU Q1 * TIME",/,             PERCNG    324
     +    "   TOTAL =",F20.1," BTU Q7 * TIME",/,                        PERCNG    325
     +    "   TOTAL =",F20.1," BTU Q24 * TIME",/,                       PERCNG    326
     +    "   TOTAL =",F20.1," BTU Q11 * TIME",/,                       PERCNG    327
     +    "   TOTAL =",F20.1," BTU Q15 * TIME",/,                       PERCNG    328
     +    "   TOTAL =",F20.1," KW HR REQUIRED BY PARASITICS",/,         PERCNG    329
     +    "   TOTAL =",F20.1," KW HR PURCHASED FOR PARASITICS",/,       PERCNG    330
     +    "   TOTAL =",F20.1," KW HR PURCHASED (MOTOR + PARA) TOTAL",/, PERCNG    331
     +    "   TOTAL =",F20.1," KW HR EXPORTED TO UTILITY",/,            PERCNG    332
     1    "   TOTAL =",F20.1," BTU TO GENERATE ELECTRICAL POWER",/,     PERCNG    333
     +    "   TOTAL =",F20.1," BTU Q8T * TIME",/,                       PERCNG    334
     +    "   TOTAL =",F20.1," BTU Q12 * TIME",/,                       PERCNG    335
     +    "   TOTAL =",F20.1," BTU Q13 * TIME",/,                       PERCNG    336
     +    "   TOTAL =",F20.1," BTU Q9  * TIME",/)                       PERCNG    337
  524 FORMAT(1H0,8X,"COST OF GAS.................",F20.2,/,           PERCNG    338
     +            9X,"COST OF PUR ELECTRIC.........",F20.2,/,           PERCNG    339
     +            9X,"CREDIT FOR EXP POWER.........",F20.2,/,           PERCNG    340
     +            9X,"ANNUAL UTIL DEMAND CHARGES...",F20.2,/,           PERCNG    341
     +            9X,"TOTAL ANNUAL OPERATING COST..",F20.2,/)           PERCNG    342
  324 FORMAT(10X,"MAX TSHP =",F20.1," HP",/,                            PERCNG    343
     +     10X,"MAX MSHP =",F20.1," HP",/,                              PERCNG    344
     +     10X,"MAX GEN  =",F20.1," KW",/,                              PERCNG    345
     +     10X,"MAX CMP1 =",F20.1," HP",/,                              PERCNG    346
     +     10X,"MAX CMP2 =",F20.1," HP",/,                              PERCNG    347
     +     10X,"MAX TPPW =",F20.1," KW",/,                              PERCNG    348
     +     10X,"MAX  Q34 =",F20.1," BTU",/,                             PERCNG    349
     +     10X,"MAX  Q33 =",F20.1," BTU",/,                             PERCNG    350
     +     10X,"MAX  Q11 =",F20.1," BTU",/,                             PERCNG    351
     +     10X,"MAX  Q8T =",F20.1," BTU",/,                             PERCNG    352
     +     10X,"MAX   Q5 =",F20.1," BTU",/,                             PERCNG    353
     +     10X,"MAX  Q15 =",F20.1," BTU",/,                             PERCNG    354
     +     10X,"MAX  Q14 =",F20.1," BTU",/,                             PERCNG    355
     +     10X,"MAX  Q13 =",F20.1," BTU",/,                             PERCNG    356
     +     10X,"MAX  Q12 =",F20.1," BTU",/,                             PERCNG    357
     +     10X,"MAX Q933 =",F20.1," BTU",/,                             PERCNG    358
     +     10X,"MAX   Q9 =",F20.1," BTU",/,)                            PERCNG    359
700   FORMAT(1H+,9X"MAX Q1 =",F20.1," BTU",/,                           PERCNG    360
     +        10X,"MAX Q7 =",F20.1," BTU",/)                            PERCNG    361
   15 FORMAT(3E10.3,2I5)                                                PERCNG    362
   25 FORMAT(2I5,3F10.0)                                                PERCNG    363
   33 FORMAT(1H1)                                                       PERCNG    364
  624 FORMAT(3X,"TOTAL =",F20.1," C1 * TIME",/,                         PERCNG    365
     +            "   TOTAL =",F20.1," C2 * TIME",/,                   PERCNG    366
     +            "   TOTAL =",F20.1," C1 HOURS ",/,                   PERCNG    367
     +            "   TOTAL =",F20.1," C2 HOURS ",/,                   PERCNG    368
     +            "   TOTAL =",F20.1," HOURS    ",/)                   PERCNG    369
C                                                                       PERCNG    370
      STOP                                                              PERCNG    371
      END                                                               PERCNG    372
      SUBROUTINE CALCU                                                  CALCU       2
      COMMON/TGCM/ETACON,ETAMM,ETAGG,FLHC,FLTS,Q16,FLWF,ETA1,ETAG,T14   CALCU       3
C---REPEATED CALCULATIONS FOR MAIN PERCNG                               CALCU       4
      COMMON/TVAL/COPC1(10),VT1C1(10),CE1(10),PWR1(10),                 CALCU       5
     +            COPC2(10),VT1C2(10),CE2(10),PWR2(10),                 CALCU       6
     +            VETH(10),VT1ETH(10),CEE(10),PWRE(10)                  CALCU       7
      COMMON/CONTR/NSTART,NCASES,NCOPC1,ICOPC1,TITLE(50),               CALCU       8
```

```
     +                NCOPC2,ICOPC2,NETH,IFTH,NEXT,NCF1,                CALCU
     +                NCF2,NCFF                                         CALCU     10
      COMMON/SVALGL/XNP,ETAGEN,ETAM,ETAR,TV,MDIAG,PCT,                  CALCU     11
     +                DTAIR,SCFMOL,SCFMVL,E7,IE(7),SV(10),              CALCU     12
     +                S08(10),SCFMV,EPSV                                CALCU     13
      COMMON/ELEC/SEVEN,LOADEDT,XMSHP,TPKW,XNMGLD,EXPKW,                CALCU     14
     +              GENLD,XMPKW,PURNEW,GENNEW                           CALCU     15
      COMMON/CALC/K,Q14,Q1,Q12,Q13,Q15,Q34,X,TSHP,Q33,Q9,               CALCU     16
     +              Q5,Q11,Q8,C1,C2,ETH,Q7,ACCPWR,AINPWR,               CALCU     17
     +              PCPWR,T1,SCFMEC,ECMAX,Q24,Q8T,Q8TM,Q12M,            CALCU     18
     +              Q14M,Q5M,NSPM                                       CALCU     19
      COMMON/SU/E1CON1,E2CON1,NP,E2CON2,E2CON3,E3CON1,E3CON3,           CALCU     20
     +            E4CON1,E5CON1,E5CON2,E6CON1,SCFMOUT,E(7)              CALCU     21
      COMMON/CORFAC/C1FAC,C2FAC,CFFAC,DAYNO,HOURNO,FLAG                 CALCU     22
      COMMON/IODEV/IN,OUT                                               CALCU     23
      COMMON/XNLOAD/XNPC1,XNPC2,XNPT,AC1,AC2,AETH,NDUAL,                CALCU     24
     +                NREV,XNPBS,XNPBL,XNPBH,XKOA,XNPB,                 CALCU     25
     +                XNPNB,BLOAD,XNBLD,GCF,ECF,DRATE                   CALCU     26
      COMMON/SCALC/T33,T34,T0,U73,U74,U83,U84,A73,A74,A83,A84,          CALCU     27
     +              G7,G8,TWB,DT,T71,T73,T81,T72,T82,T83,DTB2T81        CALCU     28
      COMMON/S2CALC/KFLAG,X30LD,X3,DOTOLD,DOTM,R,NR,ETAD                CALCU     29
      COMMON/S3CALC/G1,A14,U14,T12,H34AD                                CALCU     30
      INTEGER DAYNO,HOURNO,OUT                                          CALCU     31
C---Q14=SECOND EVAPORATOR LOAD                                          CALCU     32
C---X=SUM OF THE LOADS                                                  CALCU     33
C---Q34=REFRIGERANT CONDENSER HEAT LOAD                                 CALCU     34
C---TSHP=TURBINE SHAFT HORSEPOWER                                       CALCU     35
C---Q33=RANKINE CONDENSER HEAT LOAD                                     CALCU     36
C---Q5=TOTAL HEAT AVAIL                                                 CALCU     37
C---Q11=TOTAL GAS INPUT ENERGY                                          CALCU     38
C---Q8=Q5-Q7                                                            CALCU     39
      K=K+1                                                             CALCU     40
      IF(K.GT.200) GO TO 10                                             CALCU     41
C                                                                       CALCU     42
      IF(Q12M.EQ.(0.)) C1FAC=C1=1.                                      CALCU     43
      IF(Q12M.EQ.(0.)) GO TO 5                                          CALCU     44
      C1LOAD=(100.*Q12)/Q12M                                            CALCU     45
      CALL TLU(C1LOAD,C1FAC,PWR1,CF1,NCF1)                              CALCU     46
      C1=AC1*C1FAC                                                      CALCU     47
C                                                                       CALCU     48
    5 CONTINUE                                                          CALCU     49
      Q14=(Q12*((1+C1)/C1))+Q13+Q24                                     CALCU     50
      IF(Q14.LT.(1.)) C2FAC=C2=2.                                       CALCU     51
      IF(Q14.LT.(1.)) GO TO 600                                         CALCU     52
      CALL CORSUB                                                       CALCU     53
C                                                                       CALCU     54
      C2LOAD=(100.*Q14)/Q14M                                            CALCU     55
      CALL TLU(C2LOAD,C2FAC,PWR2,CF2,NCF2)                              CALCU     56
      C2=AC2*C2FAC                                                      CALCU     57
C                                                                       CALCU     58
600   CONTINUE                                                          CALCU     59
      IF(T34.EQ.0.) C2=2.                                               CALCU     60
      Q34=Q14*((1+C2)/C2)                                               CALCU     61
      TSHP=Q16*ETH/2545.                                                CALCU     62
      XQ14=(Q14/(2545.*C2)+FLMC)*(.746/ETAGG)+FLWF                      CALCU     63
      IF(Q14.LT.(1.)) XQ14=0.                                           CALCU     64
      X=XQ14+AINPWR*.746-(TSHP-FLTS)*.746*.985                          CALCU     65
      IF(X.GT.0.) GO TO 333                                             CALCU     66
      SEVEN=X*ETAMM*ETA1+SUMF(1.)                                       CALCU     67
      IF(SEVEN.LT.0.) GO TO 222                                         CALCU     68
      XMSHP=XMPKW=EXPKW=GENLD=0.0                                       CALCU     69
      GENNEW=ABS(X*ETAMM)                                               CALCU     70
      PURNEW=SEVEN+SUMF(2.)                                             CALCU     71
```

```
      TPKW=PURNEW+XMPKW                                                 CALCU    72
      GO TO 444                                                         CALCU    73
222   EXPKW=ABS(SEVEN)                                                  CALCU    74
      GENLD=EXPKW+SUME(1.)                                              CALCU    75
      PURNEW=SUME(2.)                                                   CALCU    76
      GENNEW=SUME(1.)                                                   CALCU    77
      TPKW=SUME(2.)                                                     CALCU    78
      XMSHP=XMPKW=0.0                                                   CALCU    79
      GO TO 444                                                         CALCU    80
333   XMSHP=X/(.746*ETAMM*ETA1)                                         CALCU    81
      XMPKW=XMSHP*.746                                                  CALCU    82
      PURNEW=SUME(2.)+SUME(1.)                                          CALCU    83
      GENNEW=GENLD=EXPKW=0.0                                            CALCU    84
      TPKW=XMPKW+PURNEW                                                 CALCU    85
444   CONTINUE                                                          CALCU    86
C     $$$ THIS IS MODEL A FOR CONFIGS 1 + 2 $$$                         CALCU    87
      Q8T=0.                                                            CALCU    88
C                                                                       CALCU    89
      DO 44 I=1,4                                                       CALCU    90
      ETHLOAD=TSHP*(100./XNPT)                                          CALCU    91
      CALL TLU(ETHLOAD,CFEAC,PWRE,CFE,NCFE)                             CALCU    92
      Q33=TSHP*ACCPWR*((1-ETH)/ETH)                                     CALCU    93
      Q5=Q9+Q33+Q34                                                     CALCU    94
      Q11=(TSHP*2545./(ETAB*ETH))+(Q9/ETAB)                             CALCU    95
      Q8=Q5-Q7                                                          CALCU    96
      IF(Q8.GT.0.) Q8T=Q8                                               CALCU    97
      CALL ETHSUB                                                       CALCU    98
      CALL TLU(T33,AETH,VT1ETH,VETH,NETH)                               CALCU    99
   44 ETH=AETH*CFEAC                                                    CALCU   100
C                                                                       CALCU   101
      IF(MDIAG.EQ.50) WRITE(OUT,50)TSHP,SUME(1),C1,C2,ETH,Q11,Q9        CALCU   102
      IF(MDIAG.EQ.50) WRITE(OUT,51) Q12,Q13,Q14,Q15,Q33,Q34,Q8,Q5       CALCU   103
      RETURN                                                            CALCU   104
   10 WRITE(OUT,15) K                                                   CALCU   105
   50 FORMAT(1X,5HTSHP=,E10.3,5HSUME=,E10.3,3HC1=,E10.3,3HC2=,E10.3,    CALCU   106
     1   4HETH=,E10.3,4HQ11=,E10.3,4H Q9=,E10.3)                        CALCU   107
   51 FORMAT(1X,4HQ12=,E10.3,4HQ13=,E10.3,4HQ14=,E10.3,4HQ15=,E10.3     CALCU   108
     1   ,4HQ33=,E10.3,4HQ34=,E10.3,5H Q8= ,E10.3,4H Q5=,E10.3)         CALCU   109
15    FORMAT(1X,"LIMIT REACHED",2X,I3)                                  CALCU   110
      STOP                                                              CALCU   111
      END                                                               CALCU   112
      SUBROUTINE ETHSUB                                                 ETHSUB    2
      COMMON/TGCM/ETACON,ETAMM,ETAGG,FLMC,FLTS,Q16,FLWF,ETA1,ETAG,T14   ETHSUB    3
      COMMON/TVAL/COPC1(10),VT1C1(10),CF1(10),PWR1(10),                 ETHSUB    4
     +            COPC2(10),VT1C2(10),CF2(10),PWR2(10),                 ETHSUB    5
     +            VETH(10),VT1ETH(10),CFE(10),PWRE(10)                  ETHSUB    6
      COMMON/CONTR/NSTART,NCASES,NCOPC1,ICOPC1,TITLE(50),               ETHSUB    7
     +             NCOPC2,ICOPC2,NETH,IETH,NEXT,NCF1,                   ETHSUB    8
     +             NCF2,NCFE                                            ETHSUB    9
      COMMON/SVALGL/XNP,ETAGEN,ETAM,ETAB,TV,MDIAG,PCT,                  ETHSUB   10
     +              DTAIR,SCFMOL,SCFMVL,E7,IE(7),SV(10),                ETHSUB   11
     +              SQB(10),SCFMV,EPSV                                  ETHSUB   12
      COMMON/ELEC/SEVEN,LOADEDT,XMSHP,TPKW,XNMGLD,EXPKW,                ETHSUB   13
     +            GENLD,XMPKW,PURNEW,GENNEW                             ETHSUB   14
      COMMON/CALC/K,Q14,Q1,Q12,Q13,Q15,Q34,X,TSHP,Q33,Q9,               ETHSUB   15
     +            Q5,Q11,Q8,C1,C2,ETH,Q7,ACCPWR,AINPWR,                 ETHSUB   16
     +            PCPWR,T1,SCFMEC,ECMAX,Q24,Q8T,Q8TM,Q12M,              ETHSUB   17
     +            Q14M,Q5M,NSPM                                         ETHSUB   18
      COMMON/SU/F1CON1,F2CON1,NP,F2CON2,F2CON3,F3CON1,F3CON3,           ETHSUB   19
     +          F4CON1,F5CON1,F5CON2,F6CON1,SCFMOUT,E(7)                ETHSUB   20
      COMMON/COREAC/C1EAC,C2EAC,CFEAC,DAYNO,HOURNO,FLAG                 ETHSUB   21
      COMMON/IODEV/IN,OUT                                               ETHSUB   22
      COMMON/XNLOAD/XNPC1,XNPC2,XNPT,AC1,AC2,AETH,NDUAL,                ETHSUB   23
```

```
     +                NREV,XNPBS,XNPBL ,XNPBH,XKOA,XNPB,                ETHSUB    24
     +                XNPNB,BLOAD,XNBLD,GCF,ECF,DRATE                   ETHSUB    25
      COMMON/SCALC/T33,T34,T0,U73,U74,U83,U84,A73,A74,A83,A84,         ETHSUB    26
     +            G7,G8,TWB,DT,T71,T73,T81,T72,T82,T83,DT82T81          ETHSUB    27
      COMMON/S2CALC/KFLAG,X30LD,X3,DOTOLD,DOTM,R,NR,ETAD               ETHSUB    28
      COMMON/S3CALC/G1,A14,U14,T12,H34AD                               ETHSUB    29
      INTEGER DAYNO,HOURNO,OUT                                         ETHSUB    30
      REAL K1,K2                                                       ETHSUB    31
      K1=60.*8.33*G8                                                   ETHSUB    32
      K2=60.*8.33*G7                                                   ETHSUB    33
      IF(Q7.GT.0) T71=T0-(Q7/K2)                                       ETHSUB    34
      IF(Q7.GT.(Q33+Q34)) T73=T71+(Q33+Q34)/K2                         ETHSUB    35
      IF(Q7.LT.(Q33+Q34)) T73=T0                                       ETHSUB    36
      CI=1/(1-EXP(-(U74*A74)/K2))                                      ETHSUB    37
      CZ=1/(1-EXP(-(U84*A84)/K1))                                      ETHSUB    38
      C3=1/(1-EXP(-(U73*A73)/K2))                                      ETHSUB    39
      C4=1/(1-EXP(-(U83*A83)/K1))                                      ETHSUB    40
      IF(Q7.GT.(0.).AND.Q8T.GT.(0.).AND.Q34.LT.(1.)) GO TO 50          ETHSUB    41
      IF(Q7.GT.(0.).AND.Q8T.GT.(0.).AND.Q34.GT.(0.)) GO TO 100         ETHSUB    42
      IF(Q8T.EQ.(0.).AND.Q7.GT.(0.).AND.Q34.GE.(0.)) GO TO 200         ETHSUB    43
      IF(Q7.EQ.(0.).AND.Q34.GE.(0.).AND.Q8T.GT.(0.)) GO TO 300         ETHSUB    44
50    T72=T34=T71                                                      ETHSUB    45
      T33=T72+C3*(Q7/K2)                                               ETHSUB    46
      T82=T33-C4*(Q8T/K2)                                              ETHSUB    47
      T83=(T33-T82)/C4+T82                                             ETHSUB    48
      T81=T82                                                          ETHSUB    49
      GO TO 400                                                        ETHSUB    50
100   CONTINUE                                                         ETHSUB    51
      H=(CI-1)*T71                                                     ETHSUB    52
      B=(C4/K1)*Q8T-C3*T73                                             ETHSUB    53
      C=Q33-Q8T-K2*T73                                                 ETHSUB    54
      T72=((H*C4*K1)-(B*C7*K1)+C*(C4-1)*(CZ-1)-                        ETHSUB    55
     +H*K1*(C4-1)+(C7-1)*B*K1-C7*C4*C)/                                ETHSUB    56
     +((CI*C4*K1)-(C7-1)*(C4-1)*K2+K1*C7*(C3-1)-                       ETHSUB    57
     +CI*K1*(C4-1)-(C7-1)*(C3-1)*K1+C7*C4*K2)                          ETHSUB    58
      T34=T71+CI*(T72-T71)                                             ETHSUB    59
      DT82T81=(Q34-K2*(T72-T71))/K1                                    ETHSUB    60
      T81=T34-CZ*DT82T81                                               ETHSUB    61
      T82=T81+DT82T81                                                  ETHSUB    62
      T83=(Q33-K2*(T73-T72))/K1+T82                                    ETHSUB    63
      T33=T82+C4*(T83-T82)                                             ETHSUB    64
      CT33=T72+C3*(T73-T72)                                            ETHSUB    65
      GO TO 400                                                        ETHSUB    66
  200 T34=T71+CI*(Q34/K2)                                              ETHSUB    67
      T33=T71+(Q34/K2)+C3*(Q33/K2)                                     ETHSUB    68
      T72=T71+(Q34/K2)                                                 ETHSUB    69
      GO TO 400                                                        ETHSUB    70
300   T81=AMAX1((TWB+DT),65.)                                          ETHSUB    71
      T34=T81+C7*(Q34/K1)                                              ETHSUB    72
      T33=T81+(Q34/K1)+C4*(Q33/K1)                                     ETHSUB    73
      T82=T81+(Q34/K1)                                                 ETHSUB    74
      T83=T81+(Q33+Q34)/K1                                             ETHSUB    75
  400 CONTINUE                                                         ETHSUB    76
      IF(MDIAG.NE.80) RETURN                                           ETHSUB    77
      WRITE(OUT,1000) Q7,Q8T,Q33,Q34                                   ETHSUB    78
      WRITE(OUT,1001) U74,A74,U84,A84                                  ETHSUB    79
      WRITE(OUT,1002) U73,A73,U83,A83                                  ETHSUB    80
      WRITE(OUT,1003) T0,TWB,DT,G7,G8                                  ETHSUB    81
      WRITE(OUT,1004) T71,T73,K1,K2                                    ETHSUB    82
      WRITE(OUT,1005) CI,CZ,C3,C4                                      ETHSUB    83
      WRITE(OUT,1006) H,B,C,T72                                        ETHSUB    84
      WRITE(OUT,1007) DT82T81,T81,T82,T83                              ETHSUB    85
      WRITE(OUT,1008) T33,T34,CT33                                     ETHSUB    86
```

```
      RETURN                                                            ETHSUB     87
1000  FORMAT("0Q7= ",F15.5,3X,"Q8T= ",F15.5,3X,"Q33= ",F15.5,3X,        ETHSUB     88
     +       "Q34= ",F15.5)                                             ETHSUB     89
1001  FORMAT("0U74= ",F15.5,3X,"A74= ",F15.5,3X,"U84= ",F15.5,          ETHSUB     90
     +       3X,"A84= ",F15.5)                                          ETHSUB     91
1002  FORMAT("0U73= ",F15.5,3X,"A73= ",F15.5,3X,"U83= ",F15.5,3X,       ETHSUB     92
     +       "A83= ",F15.5)                                             ETHSUB     93
1003  FORMAT("0T0= ",F15.5,3X,"TWB= ",F15.5,3X,"DT= ",F15.5,3X,         ETHSUB     94
     +       "G7= ",F15.5,3X,"G8= ",F15.5)                              ETHSUB     95
1004  FORMAT("0T71= ",F15.5,3X,"T73= ",F15.5,3X,"K1= ",F15.5,3X,        ETHSUB     96
     +       "K2= ",F15.5)                                              ETHSUB     97
1005  FORMAT("0C1= ",F15.5,3X,"C2= ",F15.5,3X,"C3= ",F15.5,3X,          ETHSUB     98
     +       "C4= ",F15.5)                                              ETHSUB     99
1006  FORMAT("0A= ",F15.5,3X,"B= ",F15.5,3X,"C= ",F15.5,3X,"T72=",F15.5) ETHSUB    100
1007  FORMAT("0DT82T81= ",F15.5,3X,"T81= ",F15.5,3X,"T82= ",F15.5,3X,   ETHSUB    101
     +       "T83= ",F15.5)                                             ETHSUB    102
1008  FORMAT("0T33= ",F15.5,3X,"T34= ",F15.5,3X,"CT33= ",F15.5)         ETHSUB    103
      END                                                               ETHSUB    104
      SUBROUTINE COPSUB                                                 COPSUB      2
      REAL K3                                                           COPSUB      3
      DIMENSION EFF11(6),EFF12(7),EFF22(7),X11(6),X12(7),X22(7)         COPSUB      4
      COMMON/TGCM/ETACON,ETAM4,ETAGG,FLMC,FLTS,Q16,FLWF,ETA1,ETAG,T14   COPSUB      5
      COMMON/TVAL/COPC1(10),VT1C1(10),CF1(10),PWR1(10),                 COPSUB      6
     +            COPC2(10),VT1C2(10),CF2(10),PWR2(10),                 COPSUB      7
     +            VETH(10),VT1ETH(10),CFE(10),PWRE(10)                  COPSUB      8
      COMMON/CONTR/NSTART,NCASES,NCOPC1,ICOPC1,TITLE(50),               COPSUB      9
     +             NCOPC2,ICOPC2,NETH,IETH,NEXT,NCF1,                   COPSUB     10
     +             NCF2,NCFE                                            COPSUB     11
      COMMON/SVALGL/XNP,ETAGEN,ETAM,ETAB,TV,MDIAG,PCT,                  COPSUB     12
     +              DTATR,SCFMOL,SCFMVL,E7,IE(7),SV(10),                COPSUB     13
     +              SQB(10),SCFMV,FPSV                                  COPSUB     14
      COMMON/ELEC/SEVEN,LOADEDT,XMSHP,TPKW,XNMGLD,EXPKW,                COPSUB     15
     +            GENLD,XMPKW,PURNEW,GENNEW                             COPSUB     16
      COMMON/CALC/K,Q14,Q1,Q12,Q13,Q15,Q34,X,TSHP,Q33,Q9,               COPSUB     17
     +            Q5,Q11,Q8,C1,C2,ETH,Q7,ACCPWR,AINPWR,                 COPSUB     18
     +            PCPWR,T1,SCFMFC,ECMAX,Q24,Q8T,Q8TM,Q12M,              COPSUB     19
     +            Q14M,Q5M,NSPM                                         COPSUB     20
      COMMON/SU/E1CON1,E2CON1,NP,E2CON2,E2CON3,E3CON1,E3CON3,           COPSUB     21
     +          E4CON1,E5CON1,E5CON2,E6CON1,SCFMOUT,E(7)                COPSUB     22
      COMMON/CORFAC/C1FAC,C2FAC,CEFAC,DAYNO,HOURNO,FLAG                 COPSUB     23
      COMMON/IODEV/IN,OUT                                               COPSUB     24
      COMMON/XNLOAD/XNPC1,XNPC2,XNPT,AC1,AC2,AETH,NDUAL,                COPSUB     25
     +              NREV,XNPBS,XNPBL,XNPBH,XKOA,XNPB,                   COPSUB     26
     +              XNPNB,BLOAD,XNBLD,GCF,ECF,DRATE                     COPSUB     27
      COMMON/SCALC/T33,T34,T0,U73,U74,U83,U84,A73,A74,A83,A84,          COPSUB     28
     +             G7,G8,TWB,DT,T71,T73,T81,T72,T82,T83,DT82T81         COPSUB     29
      COMMON/S2CALC/KFLAG,X3OLD,X3,DOTOLD,DOTM,R,NR,ETAD                COPSUB     30
      COMMON/S3CALC/G1,A14,U14,T12,H34AD                                COPSUB     31
      INTEGER DAYNO,HOURNO,OUT                                          COPSUB     32
      DATA EFF11/.578,.663,.722,.762,.754,.782/                         COPSUB     33
      DATA X11/11.0,14.9,21.5,23.8,25.7,26.9/                           COPSUB     34
      DATA EFF12/.508,.579,.66,.732,.76,.78,.793/                       COPSUB     35
      DATA X12/1.2,1.97,2.75,3.62,4.12,4.58,4.7/                        COPSUB     36
      DATA EFF22/.533,.580,.657,.739,.770,.778,.791/                    COPSUB     37
      DATA X22/.55,.87,1.15,1.67,1.87,2.01,2.12/                        COPSUB     38
      DATA N11,N12,N22/6,7,7/                                           COPSUB     39
      KFLAG=0                                                           COPSUB     40
      X3OLD=DOTOLD=0.                                                   COPSUB     41
      K3=500.*G1                                                        COPSUB     42
      C5=(1/(1-EXP(-U14*A14/K3)))                                       COPSUB     43
      T14=T12-(Q14*(C5-1))/K3                                           COPSUB     44
      P34SAT=PSATT(T34)                                                 COPSUB     45
      P14SAT=PSATT(T14)                                                 COPSUB     46
```

```
      HL34=HFT(T34)                                                     COPSUB    47
      HG14=HGT(T14)                                                     COPSUB    48
      Q34N=((C2+1)/C2)*Q14                                              COPSUB    49
100   Q340=Q34N                                                         COPSUB    50
      DOTM=Q14/(HG14-HL34)                                              COPSUB    51
      X3=DOTM*SQRT(T14+460.)/(P14SAT*3600.)                             COPSUB    52
      R=P34SAT/P14SAT                                                   COPSUB    53
      IF(NR.EQ.11) Z=(X3*7./75.)+2.256                                  COPSUB    54
      IF(NR.EQ.12) Z=(X3*.3/1.)+2.11                                    COPSUB    55
      IF(NR.EQ.22) Z=(X3*5./8.)+2.155                                   COPSUB    56
      IF(R.LT.Z) GO TO 200                                              COPSUB    57
      X3OLD=X3                                                          COPSUB    58
      DOTOLD=DOTM                                                       COPSUB    59
      IF(NR.EQ.11) X3=(R-2.256)/(7./75.)                                COPSUB    60
      IF(NR.EQ.12) X3=(R-2.11)/(.3/1.)                                  COPSUB    61
      IF(NR.EQ.22) X3=(R-2.155)/(5./8.)                                 COPSUB    62
      DOTM=X3*P14SAT*3600./SQRT(T14+460.)                               COPSUB    63
      KFLAG=1                                                           COPSUB    64
200   CONTINUE                                                          COPSUB    65
      IF(NR.EQ.11) CALL TLU(X3,ETAD,X11,EFF11,N11)                      COPSUB    66
      IF(NR.EQ.12) CALL TLU(X3,ETAD,X12,EFF12,N12)                      COPSUB    67
      IF(NR.EQ.22) CALL TLU(X3,ETAD,X22,EFF22,N22)                      COPSUB    68
      IF(NR.EQ.11) RM=16.86                                             COPSUB    69
      IF(NR.EQ.12) RM=17.48                                             COPSUB    70
      IF(NR.EQ.22) RM=24.6                                              COPSUB    71
      H34AD=HG14+RM*ALOG10(P34SAT/P14SAT)                               COPSUB    72
      H34ACT=HG14+(H34AD-HG14)/ETAD                                     COPSUB    73
      AC2=(HG14-HL34)/(H34ACT-HG14)                                     COPSUB    74
      Q34N=DOTM*(H34ACT-HL34)                                           COPSUB    75
      IF(ABS(Q34N-Q340)/Q340.GT..01) GO TO 100                          COPSUB    76
      Q14=DOTM*(HG14-HL34)                                              COPSUB    77
      C2LOAD=(100.*Q14)/Q14M                                            COPSUB    78
      CALL TLU(C2LOAD,C2FAC,PWR2,CF2,NCF2)                              COPSUB    79
      C2=AC2*C2FAC                                                      COPSUB    80
      IF(MDIAG.NE.30) RETURN                                            COPSUB    81
      WRITE(OUT,300) X3OLD,DOTOLD,K3,C5,T14,P34SAT,P14SAT,              COPSUB    82
     +       HL34,HG14,DOTM,X3,R,KFLAG,ETAD,RM,H34AD,H34ACT,C2          COPSUB    83
      RETURN                                                            COPSUB    84
300   FORMAT(1H1,"X3OLD=",F10.2,"DOTOLD=",F10.2,"K3=",F10.2,            COPSUB    85
     +     "C5=",F10.2,"T14=",F10.2,"P34SAT=",F10.2,/,                  COPSUB    86
     +      " P14SAT=",F10.2,"HL34=",F10.2,"HG14=",F10.2,               COPSUB    87
     +      "DOTM=",F10.2,"X3=",F10.2,"R=",F10.2,"KFLAG=",I10,          COPSUB    88
     +            /," ETAD=",F10.2,"RM=",F10.2,"H34AD=",                COPSUB    89
     +      F10.2,"H34ACT=",F10.2,"C2=",F10.2)                          COPSUB    90
      END                                                               COPSUB    91
      FUNCTION PSATT(TF)                                                PSATT      2
      REAL K                                                            PSATT      3
C                                                                       PSATT      4
      COMMON/FPL01/ AD,BD,CD,DD,ED,AVP,BVP,CVP,DVP,EVP,FVP,             PSATT      5
     1              P,B1,A2,B2,C2,A3,B3,C3,A4,B4,C4,                    PSATT      6
     2              A5,B5,C5,A6,B6,C6,K,ALPHA,CPR,                      PSATT      7
     3              ACV,BCV,CCV,DCV,ECV,XX,YY                           PSATT      8
C                                                                       PSATT      9
C                                                                       PSATT     10
      REAL LE10,J                                                       PSATT     11
C                                                                       PSATT     12
      COMMON /FPL02/ LE10,J,TREF,TOL,NR,PC,TC,VC,TFMIN,TFR              PSATT     13
C                                                                       PSATT     14
C                                                                       PSATT     15
C     SATURATION PRESSURE AS A FUNCTION OF TEMPERATURE IN DEG. F.       PSATT     16
C                                                                       PSATT     17
      T=TF+TFR                                                          PSATT     18
      IF (TF.LT.TFMIN.OR.T.GT.TC) GO TO 40                              PSATT     19
```


MECHANICAL TECHNOLOGY INCORPORATED

```
   20 PSATT=EXP ((AVP+BVP/T+CVP*ALOG10(T)+DVP*T)*LE10)                PSATT      20
      RETURN                                                          PSATT      21
   40 CALL FPLMSG(6HPSATT ,1,2,TF,0,0)                                PSATT      22
      RETURN                                                          PSATT      23
      END                                                             PSATT      24
      FUNCTION DPVDTT(TF)                                             DPVDTT      2
C                                                                     DPVDTT      3
C     ENTRY DPDTPT(P,TF)                                              DPVDTT      4
C                                                                     DPVDTT      5
C     COMPUTES TOTAL DERIVATIVE (DPV/DT) OF SATURATION PRESSURE AS A  DPVDTT      6
C     FUNCTION OF SATURATION TEMPERATURE (DEG.F).                     DPVDTT      7
C     OR DERIVATIVE AND SATURATION PRESSURE AS A FUNCTION OF SAT. TEMP. DPVDTT    8
C     (IF ENTRY POINT IS USED.)                                       DPVDTT      9
C                                                                     DPVDTT     10
      REAL K                                                          DPVDTT     11
C                                                                     DPVDTT     12
      COMMON/FPL01/ AD,BD,CD,DD,ED,AVP,BVP,CVP,DVP,EVP,FVP,           DPVDTT     13
     1              R,B1,A2,B2,C2,A3,B3,C3,A4,B4,C4,                  DPVDTT     14
     2              A5,B5,C5,A6,B6,C6,K,ALPHA,CPR,                    DPVDTT     15
     3              ACV,BCV,CCV,DCV,ECV,XX,YY                         DPVDTT     16
C                                                                     DPVDTT     17
C                                                                     DPVDTT     18
      REAL LE10,J                                                     DPVDTT     19
C                                                                     DPVDTT     20
      COMMON /FPL02/ LE10,J,TREF,TOL,NR,PC,TC,VC,TFMIN,TFR            DPVDTT     21
C                                                                     DPVDTT     22
      T=TF+TFR                                                        DPVDTT     23
      IF (TF.LT.TFMIN.OR.T.GT.TC) GO TO 90                            DPVDTT     24
      P=PSATT(TF)                                                     DPVDTT     25
   70 DPVDTT=P*((-BVP/T*LE10+CVP)/T+DVP*LE10)                         DPVDTT     26
      RETURN                                                          DPVDTT     27
   90 CALL FPLMSG(6HDPVDTT,1,2,TF,0,0)                                DPVDTT     28
      RETURN                                                          DPVDTT     29
      END                                                             DPVDTT     30
      FUNCTION HFT(TSAT)                                              HFT         2
C                                                                     HFT         3
C     ENTRY HPVVHT(HG,PSAT,VF,VG,HFG,TSAT)                            HFT         4
C                                                                     HFT         5
C     ENTHALPY OF SATURATED LIQUID AS A FUNCTION OF TSAT.             HFT         6
C     OR HF, HG, PSAT, VF, VG, AND HFG AS A FUNCTION OF TSAT.         HFT         7
C                                                                     HFT         8
C                                                                     HFT         9
      REAL LE10,J                                                     HFT        10
C                                                                     HFT        11
      COMMON /FPL02/ LE10,J,TREF,TOL,NR,PC,TC,VC,TFMIN,TFR            HFT        12
C                                                                     HFT        13
      DPDT=DPVDTT(TSAT)                                               HFT        14
      PSAT=PSATT(TSAT)                                                HFT        15
      T=TSAT+TFR                                                      HFT        16
      VG=VPTD(PSAT,TSAT)                                              HFT        17
      VF=VFT(TSAT)                                                    HFT        18
      HFG=J*DPDT*T*(VG-VF)                                            HFT        19
      HG=HTVD(TSAT,VG)                                                HFT        20
      HFT=HG-HFG                                                      HFT        21
      RETURN                                                          HFT        22
      END                                                             HFT        23
      FUNCTION HGT(TSAT)                                              HGT         2
C                                                                     HGT         3
C     ENTRY HGPVGT(PSAT,VG,TSAT)                                      HGT         4
C                                                                     HGT         5
C     ENTHALPY OF SATURATED VAPOR AS A FUNCTION OF SATURATION TEMP. (F). HGT    6
C     OR HG, PSAT, AND VG AS A FUNCTION OF SATURATION TEMP.           HGT         7
C                                                                     HGT         8
```

```
      PSAT=PSATT(TSAT)                                                  HGT      9
      VG=VPTD(PSAT,TSAT)                                                HGT     10
      HGT=HTVD(TSAT,VG)                                                 HGT     11
      RETURN                                                            HGT     12
      END                                                               HGT     13
      FUNCTION VFT(TF)                                                  VFT      2
C                                                                       VFT      3
C     SPECIFIC VOLUME OF LIQUID AS A FUNCTION OF SATURATION TEMPERATURE VFT      4
C     IN DEGREES FAHRENHEIT.                                            VFT      5
C                                                                       VFT      6
      REAL K                                                            VFT      7
C                                                                       VFT      8
      COMMON/FPL01/ AD,BD,CD,DD,ED,AVP,BVP,CVP,DVP,EVP,FVP,             VFT      9
     1              R,B1,A2,B2,C2,A3,B3,C3,A4,B4,C4,                    VFT     10
     2              A5,B5,C5,A6,B6,C6,K,ALPHA,CPR,                      VFT     11
     3              ACV,BCV,CCV,DCV,ECV,XX,YY                           VFT     12
C                                                                       VFT     13
C                                                                       VFT     14
      REAL LE10,J                                                       VFT     15
C                                                                       VFT     16
      COMMON /FPL02/ LE10,J,IREF,TOL,NR,PC,TC,VC,TFMIN,TFR              VFT     17
C                                                                       VFT     18
      DATA EX /0.333333333333E+00 /                                     VFT     19
C                                                                       VFT     20
      T=TF+TFR                                                          VFT     21
      IF (TF.LT.TFMIN.OR.T.GT.TC) GO TO 40                              VFT     22
C                                                                       VFT     23
   20 X=TC-T                                                            VFT     24
      RHOF=AD+X*(BD+ED*X)+CD*SQRT(X)+DD*X**EX                           VFT     25
      VFT=1./RHOF                                                       VFT     26
      RETURN                                                            VFT     27
   40 CALL FPLMSG(6HVFT   ,1,2,TF,0,0)                                  VFT     28
      RETURN                                                            VFT     29
      END                                                               VFT     30
      FUNCTION PTVD(TF,V)                                               PTVD     2
C                                                                       PTVD     3
C     PRESSURE AS A FUNCTION OF TEMP. (DEG.F) AND SPEC. VOL (FT**3/LBM). PTVD    4
C                                                                       PTVD     5
      REAL K                                                            PTVD     6
C                                                                       PTVD     7
      COMMON/FPL01/ AD,BD,CD,DD,ED,AVP,BVP,CVP,DVP,EVP,FVP,             PTVD     8
     1              R,B1,A2,B2,C2,A3,B3,C3,A4,B4,C4,                    PTVD     9
     2              A5,B5,C5,A6,B6,C6,K,ALPHA,CPR,                      PTVD    10
     3              ACV,BCV,CCV,DCV,ECV,XX,YY                           PTVD    11
C                                                                       PTVD    12
C                                                                       PTVD    13
      REAL LE10,J                                                       PTVD    14
C                                                                       PTVD    15
      COMMON /FPL02/ LE10,J,IREF,TOL,NR,PC,TC,VC,TFMIN,TFR              PTVD    16
C                                                                       PTVD    17
      T=TF+TFR                                                          PTVD    18
      IF (TF.LT.TFMIN.OR.V.LT.VC/1.5) GO TO 10                          PTVD    19
      VB=1./(V-B1)                                                      PTVD    20
      X=ALPHA*V                                                         PTVD    21
      IF (X.GT.70.) X=70.                                               PTVD    22
      X=EXP(X)                                                          PTVD    23
      X1=EXP(-K*T/TC)                                                   PTVD    24
      PTVD=VB*(R*T+VB*(A2+B2*T+C2*X1+VB*(A3+B3*T+C3*X1+VB*(A4+B4*T+C4*X1 PTVD    25
     1     +VB*(A5+B5*T+C5*X1)))))+(A6+B6*T+C6*X1)/X/(1.+CPR*X)          PTVD    26
      RETURN                                                            PTVD    27
   10 CALL FPLMSG(6HPTVD  ,1,2,TF,3,V)                                  PTVD    28
      RETURN                                                            PTVD    29
      END                                                               PTVD    30
```

```
      FUNCTION DPDVTV(TF,V)                                             DPDVTV     2
C                                                                       DPDVTV     3
C     COMPUTES PARTIAL DERIVATIVE (DP/DV)T AS A FUNCTION OF TEMP (DEG.F) DPDVTV    4
C     AND SPECIFIC VOLUME (FT**3/LBM).                                  DPDVTV     5
      REAL K                                                            DPDVTV     6
C                                                                       DPDVTV     7
      COMMON/FPL01/ AD,BD,CD,DD,ED,AVP,BVP,CVP,DVP,EVP,FVP,             DPDVTV     8
     1              R,B1,A2,B2,C2,A3,B3,C3,A4,B4,C4,                    DPDVTV     9
     2              A5,B5,C5,A6,B6,C6,K,ALPHA,CPR,                      DPDVTV    10
     3              ACV,BCV,CCV,DCV,ECV,XX,YY                           DPDVTV    11
C                                                                       DPDVTV    12
C                                                                       DPDVTV    13
      REAL LE10,J                                                       DPDVTV    14
C                                                                       DPDVTV    15
      COMMON /FPL02/ LE10,J,TREF,TOL,NR,PC,TC,VC,TFMIN,TFR              DPDVTV    16
C                                                                       DPDVTV    17
      IF (TF.LT.TFMIN.OR.V.LT.VC/1.5) GO TO 10                          DPDVTV    18
      T=TF+TFR                                                          DPDVTV    19
      X=ALPHA*V                                                         DPDVTV    20
      IF (X.GT.70.) X=70.                                               DPDVTV    21
      X=EXP(X)                                                          DPDVTV    22
      Y=1.+CPR*X                                                        DPDVTV    23
      X1=EXP(-K*T/TC)                                                   DPDVTV    24
      VB=1./(V-B1)                                                      DPDVTV    25
      DPDVTV=-VB*VB*(R*T+VB*(2.*(A2+B2*T+C2*X1)+VB*(3.*(A3+B3*T+C3*X1)  DPDVTV    26
     1     +VB*(4.*(A4+B4*T+C4*X1)+VB*(5.*(A5+B5*T+C5*X1))))))         DPDVTV    27
     2     -(A6+B6*T+C6*X1)*ALPHA*(1.+2.*CPR*X)/Y/Y/X                   DPDVTV    28
      RETURN                                                            DPDVTV    29
   10 CALL FPLMSG(6HDPDVTV,1,2,TF,3,V)                                  DPDVTV    30
      RETURN                                                            DPDVTV    31
      END                                                               DPDVTV    32
      FUNCTION VPTD(P,TF)                                               VPTD       2
C                                                                       VPTD       3
C     SPECIFIC VOLUME OF VAPOR AS A FUNCTION OF PRESSURE (PSIA) AND TEMP VPTD      4
C     (DEG.F).                                                          VPTD       5
C                                                                       VPTD       6
C     THIS IS AN ITERATIVE (SECOND LEVEL). (LEVEL 2.0) ROUTINE.         VPTD       7
      REAL K                                                            VPTD       8
C                                                                       VPTD       9
      COMMON/FPL01/ AD,BD,CD,DD,ED,AVP,BVP,CVP,DVP,EVP,FVP,             VPTD      10
     1              R,B1,A2,B2,C2,A3,B3,C3,A4,B4,C4,                    VPTD      11
     2              A5,B5,C5,A6,B6,C6,K,ALPHA,CPR,                      VPTD      12
     3              ACV,BCV,CCV,DCV,ECV,XX,YY                           VPTD      13
C                                                                       VPTD      14
C                                                                       VPTD      15
      REAL LE10,J                                                       VPTD      16
C                                                                       VPTD      17
      COMMON /FPL02/ LE10,J,TREF,TOL,NR,PC,TC,VC,TFMIN,TFR              VPTD      18
C                                                                       VPTD      19
      IF (TF.LT.TFMIN) GO TO 60                                         VPTD      20
      T=TF+TFR                                                          VPTD      21
C                                                                       VPTD      22
C     ATTEMPTS TO                                                       VPTD      23
C     ESTIMATE V FROM THE FIRST TWO TERMS IN EQN. OF STATE.             VPTD      24
C     RESULT IN SQRT(NEGATIVE NO.) AT HIGH PRESSURES.                   VPTD      25
C  10 A=A2+B2*T+C2*EXP(-K*T/TC)                                         VPTD      26
C     B=R*T                                                             VPTD      27
C     X=(-B+SQRT(B*B+4.*A*P))/2./A                                      VPTD      28
C     VPTD=1./X+B1                                                      VPTD      29
C                                                                       VPTD      30
C     ESTIMATE V FROM THE FIRST TERM IN EQN. OF STATE.                  VPTD      31
   10 VPTD=R*T/P+B1                                                     VPTD      32
      RHO=1./VPTD                                                       VPTD      33
```

```
C                                                                       VPTD
C     ENTRY VPTDF(P,TF)                                                 VPTD
      ENTRY VPTDF                                                       VPTD
C                                                                       VPTD
C     THIS ENTRY POINT IS USED TO SHORTEN THE ITERATION WHEN A PREVIOUS VPTD
C     ITERATION HAS ALREADY ESTABLISHED A GOOD VALUE FOR VPTD.          VPTD
C                                                                       VPTD
      DO 20 ITER=1,20                                                   VPTD
C     CALCULATE THE VALUE OF P CORRESPONDING TO T AND V. USE THE NEWTON- VPTD
C     RAPHESON METHOD TO CORRECT THE DENSITY.                           VPTD
      F=PTVD(TF,VPTD)-P                                                 VPTD
      FPRIME=-DPDVTV(TF,VPTD)/(RHO*RHO)                                 VPTD
C     CORRECTION IS MADE TO DENSITY RATHER THAN TO SPECIFIC VOLUME      VPTD
C     BECAUSE, FOR A PERFECT GAS, P=RHO*R*T, AND CONVERGENCE SHOULD BE  VPTD
C     IMPROVED.                                                         VPTD
      RHO=RHO-F/FPRIME                                                  VPTD
      VPTD=1./RHO                                                       VPTD
C     THE FOLLOWING STATEMENT IS PLACED LAST IN THE DO LOOP SO THAT     VPTD
C     EVERY ENTRY TO VPTDF WILL RESULT IN AN IMPROVED ESTIMATE OF VPTD, VPTD
C     REGARDLESS OF THE VALUE OF TOL.                                   VPTD
   20 IF (ABS(F/P).LT.TOL) RETURN                                       VPTD
C     NON-CONVERGED SOLUTION.                                           VPTD
   40 CALL FPLMSG(6HVPTD  ,2,1,P,2,TF)                                  VPTD
      RETURN                                                            VPTD
   60 CALL FPLMSG(6HVPTD  ,1,1,P,2,TF)                                  VPTD
      RETURN                                                            VPTD
      END                                                               VPTD
      FUNCTION HTVD(TF,V)                                               HTVD
C                                                                       HTVD
C     ENTRY HPTVD(P,TF,V)                                               HTVD
C                                                                       HTVD
C     ENTHALPY OF SUPERHEATED VAPOR AS A FUNCTION OF TEMP (DEG.F) AND   HTVD
C     SPECIFIC VOLUME. (FT**3/LBM).                                     HTVD
C     OR H AND P AS A FUNCTION OF T AND V.                              HTVD
C                                                                       HTVD
      REAL K                                                            HTVD
C                                                                       HTVD
      COMMON/FPL01/ AD,BD,CD,DD,ED,AVP,BVP,CVP,DVP,EVP,FVP,             HTVD
     1              R,B1,A2,B2,C2,A3,B3,C3,A4,B4,C4,                    HTVD
     2              A5,B5,C5,A6,B6,C6,K,ALPHA,CPR,                      HTVD
     3              ACV,BCV,CCV,DCV,ECV,XX,YY                           HTVD
C                                                                       HTVD
C                                                                       HTVD
      REAL LE10,J                                                       HTVD
C                                                                       HTVD
      COMMON /FPL02/ LE10,J,IREF,TOL,NR,PC,TC,VC,TFMIN,TFR              HTVD
C                                                                       HTVD
      IF (TF.LT.TFMIN.OR.V.LT.VC/1.5) GO TO 10                          HTVD
      T=TF+TFR                                                          HTVD
      X1=K*T/TC                                                         HTVD
      X1=(1.+X1)*EXP(-X1)                                               HTVD
      VB=1./(V-B1)                                                      HTVD
      P=PTVD(TF,V)                                                      HTVD
      CF1=X1*C2+A2                                                      HTVD
      CF2=(X1*C3+A3)/2.                                                 HTVD
      CF3=(X1*C4+A4)/3.                                                 HTVD
      CF4=(X1*C5+A5)/4.                                                 HTVD
      IF (ALPHA.EQ.0.) GO TO 5                                          HTVD
      CF6=(X1*C6+A6)/ALPHA                                              HTVD
      X=ALPHA*V                                                         HTVD
      IF (X.GT.70.) X=70.                                               HTVD
      X=EXP(-X)                                                         HTVD
      Y=0.                                                              HTVD
```


MECHANICAL TECHNOLOGY INCORPORATED

```
      IF (CPR.NE.0.) Y=CPR*ALOG(1.+X/CPR)                               HTVD      38
      HTVD=T*(ACV+T*(BCV/2.+T*(CCV/3.+T*DCV/4.)))-FCV/T+J*(P*V+VB*(CF1  HTVD      39
     1     +VB*(CF2+VB*(CF3+VB*CF4)))+CF6*(X-Y))+XX                     HTVD      40
      RETURN                                                            HTVD      41
    5 HTVD=T*(ACV+T*(BCV/2.+T*(CCV/3.+T*DCV/4.)))-FCV/T+J*(P*V+VB*(CF1  HTVD      42
     1     +VB*(CF2+VB*(CF3+VB*CF4))))+XX                               HTVD      43
      RETURN                                                            HTVD      44
   10 CALL FPLMSG(6HHTVD  ,1,2,TF,3,V)                                  HTVD      45
      RETURN                                                            HTVD      46
      RETURN                                                            HTVD      47
      END                                                               HTVD      48
      SUBROUTINE FPLMSG(FNAME,IERR,P1,V1,P2,V2)                         FPLMSG     2
C                                                                       FPLMSG     3
C     ERROR MESSAGE ROUTINE FOR FREON PROPERTIES LIBRARY (FPL)          FPLMSG     4
C                                                                       FPLMSG     5
      INTEGER FNAME,P1,P2,PNAME                                         FPLMSG     6
C                                                                       FPLMSG     7
      REAL LE10,J                                                       FPLMSG     8
C                                                                       FPLMSG     9
      COMMON /FPL02/ LE10,J,TREF,TOL,NR,PC,TC,VC,TFMIN,TFR              FPLMSG    10
C                                                                       FPLMSG    11
C                                                                       FPLMSG    12
      COMMON /FPL05/ IO                                                 FPLMSG    13
C                                                                       FPLMSG    14
      DIMENSION PNAME(5)                                                FPLMSG    15
C                                                                       FPLMSG    16
      DATA PNAME/6HPRESS=,6HTEMP= ,6HSPVOL=,6HENTH= ,6HENTR= /          FPLMSG    17
C                                                                       FPLMSG    18
      DATA IO/6/                                                        FPLMSG    19
C                                                                       FPLMSG    20
C      P1,P2 ARE PARAMETER NUMBERS.  V1,V2 ARE VALUES OF THE PARAMETERS. FPLMSG  21
C        1 = PRESSURE  P                                                FPLMSG    22
C        2 = TEMPERATURE T                                              FPLMSG    23
C        3 = SPECIFIC VOLUME V                                          FPLMSG    24
C        4 = ENTHALPY H                                                 FPLMSG    25
C        5 = ENTROPY  S                                                 FPLMSG    26
C        0 = NOT APPLICABLE P2 ONLY)                                    FPLMSG    27
C                                                                       FPLMSG    28
      GOTO (10,20,30),IERR                                              FPLMSG    29
C                                                                       FPLMSG    30
C     OUT OF RANGE                                                      FPLMSG    31
C                                                                       FPLMSG    32
   10 IF (P2.GT.0) GOTO 12                                              FPLMSG    33
      WRITE(IO,1010) FNAME,NR,PNAME(P1),V1,IREF                         FPLMSG    34
 1010 FORMAT(/4X,16HOUT OF RANGE IN ,A6,11H FOR FREON ,I3,              FPLMSG    35
     *       /4X,A6,G15.4,1H,,3X,5HIREF=,I3)                            FPLMSG    36
      GOTO 9999                                                         FPLMSG    37
   12 WRITE (IO,1012) FNAME,NR,PNAME(P1),V1,PNAME(P2),V2,IREF           FPLMSG    38
 1012 FORMAT(/4X,16HOUT OF RANGE IN ,A6,11H FOR FREON ,I3,              FPLMSG    39
     *       /4X,A6,G15.4,1H,,3X,A6,G15.4,1H,,3X,5HIREF=,I3)            FPLMSG    40
      GOTO 9999                                                         FPLMSG    41
C                                                                       FPLMSG    42
C     NON-CONVERGENT ITERATION                                          FPLMSG    43
C                                                                       FPLMSG    44
   20 IF (P2.GT.0) GOTO 22                                              FPLMSG    45
      WRITE(IO,1020) FNAME,NR,PNAME(P1),V1,IREF                         FPLMSG    46
 1020 FORMAT(/4X,18HNON-CONVERGENT IN ,A6,11H FOR FREON ,I3,            FPLMSG    47
     *       /4X,A6,G15.4,1H,,3X,5HIREF=,I3)                            FPLMSG    48
      GOTO 9999                                                         FPLMSG    49
   22 WRITE(IO,1022) FNAME,NR,PNAME(P1),V1,PNAME(P2),V2,IREF            FPLMSG    50
 1022 FORMAT(/4X,18HNON-CONVERGENT IN ,A6,11H FOR FREON ,I3,            FPLMSG    51
     *       /4X,A6,G15.4,1H,,3X,A6,G15.4,1H,,3X,5HIREF=,I3)            FPLMSG    52
      GOTO 9999                                                         FPLMSG    53
```

```
C                                                                       FPLMSG    54
C     INVALID REFRIGERANT NUMBER                                        FPLMSG    55
C                                                                       FPLMSG    56
   30 WRITE (IO,1030) NR                                                FPLMSG    57
 1030 FORMAT(/4X,6HFREON ,I3,34H IS AN INVALID REFRIGERANT NUMBER.)     FPLMSG    58
      STOP                                                              FPLMSG    59
C                                                                       FPLMSG    60
C     PROVIDE ENTRY POINT TO ALLOW USER RETURN ON ERROR                 FPLMSG    61
C                                                                       FPLMSG    62
 9999 CONTINUE                                                          FPLMSG    63
      CALL STRACE                                                       FPLMSG    64
      STOP                                                              FPLMSG    65
      END                                                               FPLMSG    66
      BLOCK DATA                                                        FPLMSG    67
      REAL K                                                            FPLMSG    68
C                                                                       FPLMSG    69
      COMMON/FPL01/ AD,BD,CD,DD,ED,AVP,BVP,CVP,DVP,EVP,FVP,             FPLMSG    70
     1              R,B1,A2,B2,C2,A3,B3,C3,A4,B4,C4,                    FPLMSG    71
     2              A5,B5,C5,A6,B6,C6,K,ALPHA,CPR,                      FPLMSG    72
     3              ACV,BCV,CCV,DCV,ECV,XX,YY                           FPLMSG    73
C                                                                       FPLMSG    74
C                                                                       FPLMSG    75
      REAL LE10,J                                                       FPLMSG    76
C                                                                       FPLMSG    77
      COMMON /FPL02/ LE10,J,IREF,TOL,NR,PC,TC,VC,TFMIN,TFR              FPLMSG    78
C                                                                       FPLMSG    79
C                                                                       FPLMSG    80
      COMMON /FPL05/ IO                                                 FPLMSG    81
C                                                                       FPLMSG    82
      DATA AD,BD,CD,DD,ED,AVP,BVP,CVP,DVP,EVP,FVP,                      FPLMSG    83
     1    R,B1,A2,B2,C2,A3,B3,C3,A4,B4,C4,                              FPLMSG    84
     2    A5,B5,C5,A6,B6,C6,K,ALPHA,CPR,                                FPLMSG    85
     3    ACV,BCV,CCV,DCV,ECV,XX,YY                                     FPLMSG    86
     4  / 34.84, .02696, .834921, 6.02683, -6.55549E-6,                 FPLMSG    87
     5    39.88381727, -3436.632228, -12.47152228, .004730442442, 2*0.0, FPLMSG    88
     6    .088734, .0065093886, -3.409727134, .00159434848, -56.7627671, FPLMSG    89
     7    .06023944654, -1.879618431E-5, 1.311399084, -.000548737007,    FPLMSG    90
     8     3*0.0, 3.468834E-9, -2.5439067BE-5, 3*0.0, 5.475, 2*0.0,      FPLMSG    91
     9    .0080945, .000332662, -2.413896E-7, 6.72363E-11, 0.0,          FPLMSG    92
     +    39.55655122,-.0165379361 /                                    FPLMSG    93
      DATA LE10/2.302585092994/,J/.185053/,IREF/2/,TOL/1.E-4/,NR/12/    FPLMSG    94
      DATA PC/596.9/,TC/693.3/,VC/.0287/,TFMIN/-252./,TFR/459.70/       FPLMSG    95
      DATA IO/7/                                                        FPLMSG    96
      END                                                               FPLMSG    97
      SUBROUTINE GLOBIN                                                 GLOBIN     2
      COMMON/TGCM/ETACON,ETAMM,ETAGG,FLMC,FLTS,Q16,FLWF,ETA1,ETAG,T14   GLOBIN     3
      COMMON/TVAL/COPC1(10),VTIC1(10),CF1(10),PWR1(10),                 GLOBIN     4
     +            COPC2(10),VTIC2(10),CF2(10),PWR2(10),                 GLOBIN     5
     +            VETH(10),VTIETH(10),CFE(10),PWRE(10)                  GLOBIN     6
      COMMON/CONTR/NSTART,NCASES,NCOPC1,ICOPC1,TITLE(50),               GLOBIN     7
     +             NCOPC2,ICOPC2,NETH,IETH,NEXT,NCF1,                   GLOBIN     8
     +             NCF2,NCFE                                            GLOBIN     9
      COMMON/SVALGL/XNP,ETAGEN,ETAM,ETAB,TV,MDIAG,PCT,                  GLOBIN    10
     +              DTAIR,SCFMOL,SCFMVL,F7,IE(7),SV(10),                GLOBIN    11
     +              S08(10),SCFMV,EPSV                                  GLOBIN    12
      COMMON/ELEC/SEVEN,LOADFDT,XMSHP,IPKW,XNMGLD,EXPKW,                GLOBIN    13
     +            GENLD,XMPKW,PURNEW,GENNEW                             GLOBIN    14
      COMMON/CALC/K,Q14,Q1,Q12,Q13,Q15,Q34,X,TSHP,Q33,Q9,               GLOBIN    15
     +            Q5,Q11,Q8,C1,C2,ETH,Q7,ACCPWR,AINPWR,                 GLOBIN    16
     +            PCPWP,T1,SCFMEC,ECMAX,Q24,Q8T,Q8TM,Q12M,              GLOBIN    17
     +            Q14M,Q5M,NSPM                                         GLOBIN    18
      COMMON/SU/E1CON1,E2CON1,NP,E2CON2,E2CON3,E3CON1,E3CON3,           GLOBIN    19
     +          E4CON1,E5CON1,E5CON2,E6CON1,SCFMOUT,F(7)                GLOBIN    20
```

```
      COMMON/CORFAC/C1FAC,C2FAC,CFFAC,DAYNO,HOURNO,FLAG                 GLOBIN    21
      COMMON/IODEV/IN,OUT                                               GLOBIN    22
      COMMON/XNLOAD/XNPC1,XNPC2,XNPT,AC1,AC2,AETH,NDUAL,                GLOBIN    23
     +              NREV,XNPBS,XNPBL,XNPBH,XKOA,XNPB,                   GLOBIN    24
     +              XNPNB,BLOAD,XNBLD,GCF,ECF,DRATE                     GLOBIN    25
      COMMON/SCALC/T33,T34,T0,U73,U74,U83,U84,A73,A74,A83,A84,          GLOBIN    26
     +            G7,G8,TWB,DT,T71,T73,T81,T72,T82,T83,DT82T81          GLOBIN    27
      COMMON/S2CALC/KFLAG,X3OLD,X3,DOTOLD,DOTM,R,NR,ETAD                GLOBIN    28
      COMMON/S3CALC/G1,A14,U14,T12,H34AD                                GLOBIN    29
      INTEGER DAYNO,HOURNO,OUT                                          GLOBIN    30
C     READ IN HEADING                                                   GLOBIN    31
      READ(IN,10)(TITLE(I),I=1,50)                                      GLOBIN    32
C     READ IN CONTROL INFORMATION                                       GLOBIN    33
      READ(IN,20)NSTART,NCASES,NCOPC1,ICOPC1,NCOPC2,ICOPC2,NETH,        GLOBIN    34
     +        IETH,NEXT,NCF1,NCF2,NCFE,MDIAG,LOADEDT,NDUAL,NREV         GLOBIN    35
C     READ SINGLE VALUED GLOBAL PARAMETERS                              GLOBIN    36
      READ(IN,50) XNP,ETAGEN,ETAM,ETAB,TV,EPSV,DTAIR,SCFMOL             GLOBIN    37
      READ(IN,50) SCFMVL,E7,ECMAX,PCT,AINPWR,XNPC1,XNPC2,XNPT           GLOBIN    38
      READ(IN,50) XNPBS,QBTM,Q14M,DRATE,GCF,ECF,ETAG                    GLOBIN    39
      READ(IN,50)     ETACON,ETAMM,ETAGG,FLMC,FLTS,Q16,FLWF,ETA1        GLOBIN    40
      READ(IN,50) DT,T0,G7,G8,T12,U14,A14,G1                            GLOBIN    41
      READ(IN,50) U73,U83,U74,U84,A73,A83,A74,A84                       GLOBIN    42
      READ(IN,20) NSPM,NR                                               GLOBIN    43
C     READ PARASITIC ELECTRIC LOAD CONTROLS                             GLOBIN    44
      READ(IN,20)(IE(I),I=1,7)                                          GLOBIN    45
C     READ COPC1 CURVE                                                  GLOBIN    46
      READ(IN,50)(COPC1(I),VT1C1(I),I=1,NCOPC1)                         GLOBIN    47
C     READ COPC2 CURVE                                                  GLOBIN    48
      READ(IN,50)(COPC2(I),VT1C2(I),I=1,NCOPC2)                         GLOBIN    49
C     READ ETATH CURVE                                                  GLOBIN    50
      READ(IN,50)(VETH(I),VT1ETH(I),I=1,NETH)                           GLOBIN    51
C     READ CORRECTION FACTOR FOR COPC1                                  GLOBIN    52
      READ(IN,50)(CF1(I),PWR1(I),I=1,NCF1)                              GLOBIN    53
C     READ CORRECTION FACTOR FOR COPC2                                  GLOBIN    54
      READ(IN,50)(CF2(I),PWR2(I),I=1,NCF2)                              GLOBIN    55
C     READ CORRECTION FACTOR FOR ETATH                                  GLOBIN    56
      READ(IN,50)(CFE(I),PWRE(I),I=1,NCFE)                              GLOBIN    57
C                                                                       GLOBIN    58
C     FORMATS                                                           GLOBIN    59
10    FORMAT(80A1)                                                      GLOBIN    60
20    FORMAT(16I5)                                                      GLOBIN    61
50    FORMAT(8F10.3)                                                    GLOBIN    62
      RETURN                                                            GLOBIN    63
      END                                                               GLOBIN    64
      SUBROUTINE GLBOUT                                                 GLBOUT     2
      COMMON/TGCM/ETACON,ETAMM,ETAGG,FLMC,FLTS,Q16,FLWF,ETA1,ETAG,T14   GLBOUT     3
      COMMON/TVAL/COPC1(10),VT1C1(10),CF1(10),PWR1(10),                 GLBOUT     4
     +            COPC2(10),VT1C2(10),CF2(10),PWR2(10),                 GLBOUT     5
     +            VETH(10),VT1ETH(10),CFE(10),PWRE(10)                  GLBOUT     6
      COMMON/CONTR/NSTART,NCASES,NCOPC1,ICOPC1,TITLE(50),               GLBOUT     7
     +             NCOPC2,ICOPC2,NETH,IETH,NEXT,NCF1,                   GLBOUT     8
     +             NCF2,NCFE                                            GLBOUT     9
      COMMON/SVALGL/XNP,ETAGEN,ETAM,ETAB,TV,MDIAG,PCT,                  GLBOUT    10
     +              DTAIR,SCFMOL,SCFMVL,E7,IE(7),SV(10),                GLBOUT    11
     +              SQB(10),SCFMV,EPSV                                  GLBOUT    12
      COMMON/ELEC/SEVEN,LOADEDT,XMSHP,TPKW,XNMGLD,EXPKW,                GLBOUT    13
     +            GENLD,XMPKW,PURNEW,GENNEW                             GLBOUT    14
      COMMON/CALC/K,Q14,Q1,Q12,Q13,Q15,Q34,X,TSHP,Q33,Q9,               GLBOUT    15
     +            Q5,Q11,Q8,C1,C2,ETH,Q7,ACCPWR,AINPWR,                 GLBOUT    16
     +            PCPWR,T1,SCFMEC,ECMAX,Q24,QBT,QBTM,Q12M,              GLBOUT    17
     +            Q14M,Q5M,NSPM                                         GLBOUT    18
      COMMON/SU/F1CON1,F2CON1,NP,F2CON2,F2CON3,F3CON1,F3CON3,           GLBOUT    19
     +          F4CON1,F5CON1,F5CON2,F6CON1,SCFMOUT,F(7)                GLBOUT    20
```

```
      COMMON/COREAC/C1EAC,C2EAC,CEEAC,DAYNO,HOURNO,FLAG                 GLBOUT
      COMMON/IODEV/IN,OUT                                               GLBOUT     22
      COMMON/XNLOAD/XNPC1,XNPC2,XNPT,AC1,AC2,AETH,NDUAL,                GLBOUT     23
     +              NREV,XNPBS,XNPBL,XNPBH,XKOA,XNPB,                   GLBOUT     24
     +              XNPNB,BLOAD,XNBLD,GCF,ECF,DRATE                     GLBOUT     25
      COMMON/SCALC/T33,T34,T0,U73,U74,U83,U84,A73,A74,A83,A84,          GLBOUT     26
     +             G7,G8,TWB,DT,T71,T73,T81,T72,T82,T83,DT82T81         GLBOUT     27
      COMMON/S2CALC/KELAG,X3OLD,X3,DOTOLD,DOTM,R,NR,ETAD                GLBOUT     28
      COMMON/S3CALC/G1,A14,U14,T12,H34AD                                GLBOUT     29
      INTEGER DAYNO,HOURNO,OUT                                          GLBOUT     30
C     WRITE HEADING                                                     GLBOUT     31
      WRITE(OUT,100)(TITLE(I),I=1,50)                                   GLBOUT     32
C     WRITE OUT CONTROL INFORMATION                                     GLBOUT     33
      WRITE(OUT,110)NSTART,NCASES,NCOPC1,ICOPC1,NCOPC2,ICOPC2,NETH,     GLBOUT     34
     +              IETH,MDTAG,NEXT                                     GLBOUT     35
C     WRITE SINGLE VALUED GLOBAL PARAMETERS                             GLBOUT     36
      WRITE(OUT,120) XNP,XNPC1,XNPC2,XNPT,GCF,ECF,DRATE,                GLBOUT     37
     +               QBTM,Q14M,ETAGEN,ETAM,ETA1,ETAG                    GLBOUT     38
      WRITE(OUT,122) T12,G1,A14,U14,A74,U74,A84,U84,A73,U73,A83,U83,Q16 GLBOUT     39
     +        ,NR                                                       GLBOUT     40
      WRITE(OUT,400) ETACON,ETAMM,ETAGG,FLMC,FLWF,FLTS                  GLBOUT     41
      WRITE(OUT,125) ETAB,DT,T0,G7,G8,TV,FPSV,DTAIR,PCT,AINPWR          GLBOUT     42
C     WRITE LIMITING VALUES                                             GLBOUT     43
      WRITE(OUT,100) (TITLE(I),I=1,50)                                  GLBOUT     44
      WRITE(OUT,130)SCFMVL,SCFMOL,ECMAX                                 GLBOUT     45
C     WRITE PARASITIC ELECTRIC LOAD CONTROLS                            GLBOUT     46
      WRITE(OUT,230)                                                    GLBOUT     47
      DO 5 I=1,7                                                        GLBOUT     48
      IF(IE(I).EQ.0)GO TO 30                                            GLBOUT     49
      WRITE(OUT,235)I                                                   GLBOUT     50
      GO TO 5                                                           GLBOUT     51
30    CONTINUE                                                          GLBOUT     52
      WRITE(OUT,500)I                                                   GLBOUT     53
5     CONTINUE                                                          GLBOUT     54
C     WRITE COPC1 CURVE                                                 GLBOUT     55
      WRITE(OUT,140)ICOPC1                                              GLBOUT     56
      WRITE(OUT,150)(COPC1(I),I=1,NCOPC1)                               GLBOUT     57
      WRITE(OUT,160)(VT1C1(I),I=1,NCOPC1)                               GLBOUT     58
C     WRITE COPC2 CURVE                                                 GLBOUT     59
      WRITE(OUT,170)ICOPC2                                              GLBOUT     60
      WRITE(OUT,180)(COPC2(I),I=1,NCOPC2)                               GLBOUT     61
      WRITE(OUT,190)(VT1C2(I),I=1,NCOPC2)                               GLBOUT     62
C     WRITE ETATH CURVE                                                 GLBOUT     63
      WRITE(OUT,200)IETH                                                GLBOUT     64
      WRITE(OUT,210)(VETH(I),I=1,NETH)                                  GLBOUT     65
      WRITE(OUT,220)(VT1ETH(I),I=1,NETH)                                GLBOUT     66
C     WRITE CORRECTION FACTOR FOR COPC1                                 GLBOUT     67
      WRITE(OUT,240)ICOPC1                                              GLBOUT     68
      WRITE(OUT,250)(CF1(I),I=1,NCF1)                                   GLBOUT     69
      WRITE(OUT,260)(PWR1(I),I=1,NCF1)                                  GLBOUT     70
C     WRITE OUT CORRECTION FACTOR FOR COPC2                             GLBOUT     71
      WRITE(OUT,270)ICOPC2                                              GLBOUT     72
      WRITE(OUT,280)(CF2(I),I=1,NCF2)                                   GLBOUT     73
      WRITE(OUT,290)(PWR2(I),I=1,NCF2)                                  GLBOUT     74
C     WRITE CORRECTION FACTOR FOR ETATH                                 GLBOUT     75
      WRITE(OUT,300)IETH                                                GLBOUT     76
      WRITE(OUT,310)(CFE(I),I=1,NCFE)                                   GLBOUT     77
      WRITE(OUT,320)(PWRE(I),I=1,NCFE)                                  GLBOUT     78
C     FORMATS                                                           GLBOUT     79
100   FORMAT(1H1,20X,50A1,/,20X,50(1H-))                                GLBOUT     80
110   FORMAT(10X,"CONTROLS",/,10X,8(1H-),/,                             GLBOUT     81
     1       15X,"STARTING CASE NUMBER................",I5,/,          GLBOUT     82
     2       15X,"NUMBER OF VARIATIONS OF T1,Q1,Q7...",I5,/,            GLBOUT     83
```

```
     3        15X,"NUMBER OF VALUES FOR COPC1 CURVE...",I5,/,          GLBOUT    84
     4        15X,"COPC1 CURVE NUMBER.................",I5,/,          GLBOUT    85
     5        15X,"NUMBER OF VALUES FOR COPC2 CURVE...",I5,/,          GLBOUT    86
     6        15X,"COPC2 CURVE NUMBER.................",I5,/,          GLBOUT    87
     7        15X,"NUMBER OF VALUES FOR ETATH CURVE...",I5,/,          GLBOUT    88
     8        15X,"ETATH CURVE NUMBER.................",I5,/,          GLBOUT    89
     1        15X,"DIAGNOSTIC CONTROL.................",I5,/,          GLBOUT    90
     9        15X,"NEXT CASE INDICATOR................",I5/)           GLBOUT    91
120   FORMAT(10X,"GLOBAL PARAMETERS",/,10X,17(1H-),/,                  GLBOUT    92
     1        15X,"NAMEPLATE COOLING..............",F10.1,"TONS",/,   GLBOUT    93
     +        15X,"NAMEPLATE COMPRESSOR 1........",F10.1,"HP  ",/,     GLBOUT    94
     +        15X,"NAMEPLATE COMPRESSOR 2........",F10.1,"HP  ",/,     GLBOUT    95
     +        15X,"NAMEPLATE TURBINE..............",F10.1,"HP  ",/,    GLBOUT    96
     +        15X,"GAS COST FACTOR................",F10.2,"PER MBTU",/, GLBOUT    97
     +        15X,"ELECTRICITY COST FACTOR.......",F10.7,"PER KWHR",/, GLBOUT    98
     +        15X,"ELECTRIC DEMAND RATE..........",F10.7,"PER KWHR",/, GLBOUT    99
     +        15X,"COOLING TOWER DESIGN LOAD.....",F10.1,"BTU/HR",/,   GLBOUT   100
     +        15X,"CHILLER EVAP. DESIGN LOAD.....",F10.1,"BTU/HR",/,   GLBOUT   101
     +        15X,"ETACC..........................",F10.4,"FRACTION",/, GLBOUT   102
     +        15X,"ETART..........................",F10.4,"FRACTION",/, GLBOUT   103
     +        15X,"ETA1...........................",F10.4,"FRACTION",/, GLBOUT   104
     +        15X,"ETAG...........................",F10.4,"FRACTION")   GLBOUT   105
122   FORMAT(                                                          GLBOUT   106
     +        15X,"SUPPLY TEMP TO CHILLER SYSTEM.",F10.1,/,            GLBOUT   107
     +        15X,"WATER FLOW - CHILLER SYSTEM...",F10.1,/,            GLBOUT   108
     +        15X,"HX AREA - REF EVAPORATOR......",F10.1,/,            GLBOUT   109
     +        15X,"HX O/A U - REF EVAPORATOR.....",F10.1,/,            GLBOUT   110
     +        15X,"HX AREA - REF CON HEAT SYSTEM.",F10.1,/,            GLBOUT   111
     +        15X,"HX O/A U - REF CON HEAT SYS...",F10.1,/,            GLBOUT   112
     +        15X,"HX AREA - REF CON COOL TOWER..",F10.1,/,            GLBOUT   113
     +        15X,"HX O/A U - REF CON COOL TOWER.",F10.1,/,            GLBOUT   114
     +        15X,"HX AREA - RANK CON HEAT SYS...",F10.1,/,            GLBOUT   115
     +        15X,"HX O/A U - RANK CON HEAT SYS..",F10.1,/,            GLBOUT   116
     +        15X,"HX AREA - RANK CON COOL TOWER.",F10.1,/,            GLBOUT   117
     +        15X,"HX O/A U - RANK CON COOL TOWER",F10.1,/,            GLBOUT   118
     +        15X,"Q16............................",F10.1,/,            GLBOUT   119
     +        15X,"FREON REFRIGERANT..............",7X,"R",I2)         GLBOUT   120
400   FORMAT(15X,"ETACON.........................",F10.4,/,            GLBOUT   121
     +        15X,"ETAMM..........................",F10.4,/,            GLBOUT   122
     +        15X,"ETAGG..........................",F10.4,/,            GLBOUT   123
     +        15X,"FIX LOSSES MOTOR + COMP.......",F10.4,/,            GLBOUT   124
     +        15X,"FIX LOSSES WIND + FRICTION....",F10.4,/,            GLBOUT   125
     +        15X,"FIX LOSSES TURBINE SHAFT......",F10.4)              GLBOUT   126
125   FORMAT(                                                          GLBOUT   127
     +        15X,"ETAB...........................",F10.4,"FRACTION",/, GLBOUT   128
     +        15X,"COOLING TOWER APPROACH TEMP...",F10.4,/,            GLBOUT   129
     +        15X,"SUPPLY TEMP TO HEAT SYSTEM....",F10.4,/,            GLBOUT   130
     +        15X,"WATER FLOW - HEAT SYSTEM......",F10.4,/,            GLBOUT   131
     +        15X,"WATER FLOW - COOLING TOWER....",F10.4,/,            GLBOUT   132
     5        15X,"TV.............................", F10.4,/,          GLBOUT   133
     6        15X,"EPSV...........................",F10.4,/,            GLBOUT   134
     7        15X,"CHANGE IN AIR TEMP.............",F10.4,/,            GLBOUT   135
     8        15X,"Q8 TOLERANCE...................",F10.4,/,            GLBOUT   136
     +        15X,"INPUT ACCESSORY POWER.........",F10.4)               GLBOUT   137
130   FORMAT(10X,"LIMITING VALUES",/,10X,15(1H-),/,                    GLBOUT   138
     1        15X,"MAX SCFMVL.....................",F10.4,/,            GLBOUT   139
     2        15X,"MAX SCFMOL.....................",F10.4,/,            GLBOUT   140
     3    15X,"MAX ECONOMIZER................",F10.4,/)               GLBOUT   141
140   FORMAT(10X,"COPC1 CURVE NUMBER",I5,/,10X,21(1H-))                GLBOUT   142
150   FORMAT(12X,"COPC1",10F6.3,/)                                     GLBOUT   143
160   FORMAT(12X,"VT1C1",10F6.1,/)                                     GLBOUT   144
170   FORMAT(/,10X,"COPC2 CURVE NUMBER",I5,/,10X,23(1H-))              GLBOUT   145
180   FORMAT(12X,"COPC2",10F6.3,/)                                     GLBOUT   146
```

```
190   FORMAT(12X,"VT1C2",10F6.1)                                        GLBOUT   147
  200 FORMAT(/,10X,"ETATH CURVE NUMBER",I5,/,10X,23(1H-))               GLBOUT   148
210   FORMAT(12X,"ETATH",10F6.3)                                        GLBOUT   149
220   FORMAT(12X,"VT1ETH",10F6.1)                                       GLBOUT   150
230   FORMAT(10X,"LOAD CONTROLS",/,10X,13(1H-),/)                       GLBOUT   151
235   FORMAT(15X,"ELECTRIC LOAD SUPPLIED BY SYSTEM..","E(",I1,")",/)    GLBOUT   152
500   FORMAT(15X,"ELECTRIC LOAD PURCHASED...........","E(",I1,")",/)    GLBOUT   153
240   FORMAT(/,10X,"COPC1 CORRECTION FACTOR CURVE NUMBER",I5,/,10X,     GLBOUT   154
     1   41(1H-))                                                       GLBOUT   155
250   FORMAT(12X,"CF1",10F6.3)                                          GLBOUT   156
260   FORMAT(12X,"PWR1",10F6.0)                                         GLBOUT   157
270   FORMAT(/,10X,"COPC2 CORRECTION FACTOR CURVE NUMBER",I5,/,10X,     GLBOUT   158
     1    41(1H-))                                                      GLBOUT   159
280   FORMAT(12X,"CF2",10F6.3)                                          GLBOUT   160
290   FORMAT(12X,"PWR2",10F6.0)                                         GLBOUT   161
300   FORMAT(/,10X,"ETATH CORRECTION FACTOR CURVE NUMBER",I5,/,10X,     GLBOUT   162
     1    41(1H-))                                                      GLBOUT   163
310   FORMAT(12X,"CFE",10F6.3)                                          GLBOUT   164
320   FORMAT(12X,"PWRE",10F6.0)                                         GLBOUT   165
      RETURN                                                            GLBOUT   166
      END                                                               GLBOUT   167
      SUBROUTINE CASOUT                                                 CASOUT     2
      COMMON/TGCM/ETACON,ETAMM,ETAGG,FLMC,FLTS,Q16,FLWF,ETA1,ETAG,T14   CASOUT     3
      COMMON/TVAL/COPC1(10),VT1C1(10),CF1(10),PWR1(10),                 CASOUT     4
     +            COPC2(10),VT1C2(10),CF2(10),PWR2(10),                 CASOUT     5
     +            VETH(10),VT1ETH(10),CFE(10),PWRE(10)                  CASOUT     6
      COMMON/CONTR/NSTART,NCASES,NCOPC1,ICOPC1,TITLE(50),               CASOUT     7
     +             NCOPC2,ICOPC2,NETH,IETH,NEXT,NCF1,                   CASOUT     8
     +             NCF2,NCFE                                            CASOUT     9
      COMMON/SVALGL/XNP,ETAGEN,ETAM,ETAB,TV,MDIAG,PCT,                  CASOUT    10
     +              DTAIR,SCFMOL,SCFMVL,E7,IE(7),SV(10),                CASOUT    11
     +              S08(10),SCFMV,EPSV                                  CASOUT    12
      COMMON/ELEC/SEVEN,LOADEDT,XMSHP,TPKW,XNMGLD,EXPKW,                CASOUT    13
     +            GENLD,XMPKW,PURNEW,GENNEW                             CASOUT    14
      COMMON/CALC/K,Q14,Q1,Q12,Q13,Q15,Q34,X,TSHP,Q33,Q9,               CASOUT    15
     +            Q5,Q11,Q8,C1,C2,ETH,Q7,ACCPWR,AINPWR,                 CASOUT    16
     +            PCPWR,T1,SCFMEC,ECMAX,Q24,Q8T,Q8TM,Q12M,              CASOUT    17
     +            Q14M,Q5M,NSPM                                         CASOUT    18
      COMMON/SU/E1CON1,E2CON1,NP,E2CON2,E2CON3,E3CON1,E3CON3,           CASOUT    19
     +          E4CON1,E5CON1,E5CON2,E6CON1,SCFMOUT,E(7)                CASOUT    20
      COMMON/COREAC/C1FAC,C2FAC,CEFAC,DAYNO,HOURNO,FLAG                 CASOUT    21
      COMMON/IODEV/IN,OUT                                               CASOUT    22
      COMMON/XNLOAD/XNPC1,XNPC2,XNPT,AC1,AC2,AETH,NDUAL,                CASOUT    23
     +              NREV,XNPBS,XNPBL,XNPBH,XKOA,XNPB,                   CASOUT    24
     +              XNPNB,BLOAD,XNBLD,GCF,ECF,DRATE                     CASOUT    25
      COMMON/SCALC/T33,T34,T0,U73,U74,U83,U84,A73,A74,A83,A84,          CASOUT    26
     +             G7,G8,TWB,DT,T71,T73,T81,T72,T82,T83,DT82T81         CASOUT    27
      COMMON/S2CALC/KFLAG,X30LD,X3,DOTOLD,DOTM,R,NR,ETAD                CASOUT    28
      COMMON/S3CALC/G1,A14,U14,T12,H34AD                                CASOUT    29
      INTEGER DAYNO,HOURNO,OUT                                          CASOUT    30
      DIMENSION FP(7)                                                   CASOUT    31
C---CUR1=HEATING COPC1 CURVE                                            CASOUT    32
C---CURE=THERMAL EFFICIENCY CURVE                                       CASOUT    33
C---CUR2=COOLING COPC2 CURVE                                            CASOUT    34
C---Q9E=HEAT INPUT TO STEAM GENERATOR(DIRECT STEAM AUGMENTATION ONLY)   CASOUT    35
C---Q11=TOTAL GAS INPUT ENERGY                                          CASOUT    36
C---Q119=HEAT INPUT-RANKINE CYCLE                                       CASOUT    37
      WRITE(OUT,10)DAYNO,HOURNO                                         CASOUT    38
      IF(FLAG.EQ.2.)WRITE(OUT,90)NSTART                                 CASOUT    39
      IF(FLAG.EQ.3.)WRITE(OUT,80)NSTART                                 CASOUT    40
      IF(FLAG.EQ.4.)WRITE(OUT,70)NSTART                                 CASOUT    41
      IF(FLAG.EQ.5.)WRITE(OUT,50)NSTART                                 CASOUT    42
      Z=SUMF(2.)                                                        CASOUT    43
```

```
      DO 39 I=1,7                                                       CASOUT     44
      EP(I)=F(I)                                                        CASOUT     45
   39 CONTINUE                                                          CASOUT     46
      Z=SUMF(1.)                                                        CASOUT     47
      NFLAG=0                                                           CASOUT     48
      IF(NFLAG.EQ.1) GO TO 49                                           CASOUT     49
      CMP1=Q12/(C1*2545.)                                               CASOUT     50
      CMP2=Q14/(C2*2545.)                                               CASOUT     51
      GO TO 59                                                          CASOUT     52
   49 CALL TLU(BLOAD,B1,PWR1,CF1,NCF1)                                  CASOUT     53
      Q14B=Q14M*BLOAD*(XNPB/(XNPB+XNPNB))/100.                          CASOUT     54
      CMPB=Q14B/(B1*AC2*2545.)                                          CASOUT     55
      CALL TLU(XNBLD,B2,PWR1,CF1,NCF1)                                  CASOUT     56
      CMPN=(Q14-Q14B)/(B2*AC2*2545.)                                    CASOUT     57
   59 CONTINUE                                                          CASOUT     58
      COOL=Q1*ETH*ETAB*ETAM/(X-3413./ETAGEN)                            CASOUT     59
      CUR1=C1/C1FAC                                                     CASOUT     60
      CURE=ETH/CEFAC                                                    CASOUT     61
      CUR2=C2/C2FAC                                                     CASOUT     62
      Q9E=Q9/ETAB                                                       CASOUT     63
      Q119=Q11-(Q9/ETAB)                                                CASOUT     64
      Q711=Q7/Q11                                                       CASOUT     65
      WRITE(OUT,110)T1,Q1,Q7,Q15                                        CASOUT     66
      WRITE(OUT,120) Q8T,SCFMEC,SCFMV,Q13,SCFMOUT,Q12                   CASOUT     67
      WRITE(OUT,130) Q34,Q33,Q119,Q9                                    CASOUT     68
      WRITE(OUT,140)Q9E,Q11                                             CASOUT     69
      IF(NFLAG.EQ.0) WRITE(OUT,150) AINPWR,CMP1,CMP2,TSHP,XNP           CASOUT     70
      IF(NFLAG.EQ.1) WRITE(OUT,250) AINPWR,CMPB,CMPN,TSHP,XNP           CASOUT     71
      WRITE(OUT,215) XMSHP,XMPKW,TPKW,EXPKW,GENLD                       CASOUT     72
      WRITE(OUT,170) ETAB,ETAM                                          CASOUT     73
      WRITE(OUT,160)CURE,CEFAC,ETH                                      CASOUT     74
      IF(NFLAG.EQ.0) WRITE(OUT,180)CUR2,C2FAC,C2                        CASOUT     75
      IF(NFLAG.EQ.1) WRITE(OUT,230) AC2,XKOA,C2                         CASOUT     76
      IF(NFLAG.EQ.0) WRITE(OUT,200) CUR1,C1FAC,C1                       CASOUT     77
      IF(NFLAG.EQ.1) WRITE(OUT,240) XNPB,BLOAD,XNPNB,XNBLD              CASOUT     78
      WRITE(OUT,210) (T,F(I),EP(I),I=1,7)                               CASOUT     79
      WRITE(OUT,220) SUMF(1.),SUMF(2.)                                  CASOUT     80
      WRITE(OUT,260) GENNEW,PURNEW                                      CASOUT     81
      IF(MDIAG.NE.60) GO TO 500                                         CASOUT     82
      WRITE(OUT,270) T71,T72,T73,T81,T82,T83,TWB,T33,T34,T14            CASOUT     83
      WRITE(OUT,280) X30LD,DOTOLD,X3,DOTM,R,ETAD,H34AD,Q14              CASOUT     84
500   CONTINUE                                                          CASOUT     85
C                                                                       CASOUT     86
C   FORMATS                                                             CASOUT     87
C                                                                       CASOUT     88
10    FORMAT(49X,10HDAY NUMBER,3X,I5,/,49X,11HHOUR NUMBER,2X,I5,/)      CASOUT     89
50    FORMAT(12X,10HTOWER LOAD,27X,8HCASE NO.,5X,I5,//)                 CASOUT     90
70    FORMAT(12X,12HDIRECT STEAM,25X,8HCASE NO.,5X,I5,//)               CASOUT     91
80    FORMAT(12X,18HOUTSIDE EVAPORATOR,19X,8HCASE NO.,5X,I5,//)         CASOUT     92
90    FORMAT(12X,9HVENT LOAD,28X,8HCASE NO.,5X,I5,//)                   CASOUT     93
110   FORMAT(12X,34HAMBIENT TEMPERATURE................,F12.1,3X,5HDEG F, CASOUT     94
     * /,                                                                CASOUT     95
     1  12X,34HREQUIRED COOLING LOAD.............,F12.0,3X,6HBTU/HR,/,   CASOUT     96
     2   12X,34HREQUIRED HEATING LOAD.............,F12.0,3X,6HBTU/HR,/,  CASOUT     97
     +  12X,34HECONOMIZER COOLING LOAD............,F12.0,3X,6HBTU/HR)    CASOUT     98
120   FORMAT(12X,34HCOOLING TOWER LOAD.................,F12.0,3X,6HBTU/HR CASOUT     99
     * ,/,                                                               CASOUT    100
     +   12X,34HSCFMEC..........................,F12.0,3X,4HSCFM,/,      CASOUT    101
     1   12X,34HSCFMREC.........................,F12.0,3X,4HSCFM,/,      CASOUT    102
     2   12X,34HVENTILATION LOAD................,F12.0,3X,6HBTU/HR,/,   CASOUT    103
     3   12X,34HSCFMOUT.........................,F12.0,3X,4HSCFM,/,      CASOUT    104
     +   12X,34HOUTSIDE AIR LOAD................,F12.0,3X,6HBTU/HR)      CASOUT    105
130   FORMAT(12X,34HREFRIGERANT CONDENSER HEAT LOAD...,F12.0,3X,         CASOUT    106
```

```
     $    6HBTU/HR,/,                                                    CASOUT    107
     1 12X,34HRANKINE CONDENSER HEAT LOAD.......,F12.0,3X,6HBTU/HR,/,    CASOUT    108
     2 12X,34HHEAT INPUT TO STEAM GENERATOR      ,/,                     CASOUT    109
     3 12X,34H      (RANKINE CYCLE ONLY).........,F12.0,3X,6HBTU/HR,/,   CASOUT    110
     +   12X,34HDIRECT STEAM AUGMENTATION.........,F12.0,3X,6HBTU/HR)   CASOUT    111
140   FORMAT(12X,34HHEAT INPUT TO STEAM GENERATOR       , /,            CASOUT    112
     1 12X,34H  (DIRECT STEAM AUGMENTATION ONLY),F12.0,3X,6HBTU/HR,/,    CASOUT    113
     +   12X,34HTOTAL GAS INPUT ENERGY............,F12.0,3X,6HBTU/HR)   CASOUT    114
150   FORMAT(12X,34HPARASITIC SHAFT POWER.............,F12.2,3X,6HHP    CASOUT    115
     *,/,                                                               CASOUT    116
     1  12X,34HC1 SHAFT POWER.....................,F12.2,3X,6HHP    ,/, CASOUT    117
     1  12X,34HC2 SHAFT POWER.....................,F12.2,3X,6HHP    ,/, CASOUT    118
     1 12X,34HTURBINE SHAFT POWER...............,F12.2,3X,6HHP    ,/,   CASOUT    119
     +  12X34HNAMEPLATE COOLING.................,F12.0,3X,6HTONS  )    CASOUT    120
160   FORMAT(12X,34HTHERMAL EFFICIENCY                      ,/,         CASOUT    121
     1  12X,5HCURVE,F5.2,2X,17HCORRECTION FACTOR,F5.2,2X,6HACTUAL,F7.4   CASOUT    122
     +)                                                                 CASOUT    123
170   FORMAT(12X,34HSTEAM GENERATOR EFFICIENCY........,F12.2,/,         CASOUT    124
     +  12X,34HMECHANICAL EFFICIENCY.............,F12.2)                CASOUT    125
180   FORMAT(12X,34HCOOLING COPC2.....................,/,              CASOUT    126
     1 12X,5HCURVE,F5.2,2X,17HCORRECTION FACTOR,F5.2,2X,6HACTUAL,       CASOUT    127
     +  F7.3)                                                           CASOUT    128
200   FORMAT(12X,34HHEATING COPC1 EXCLUDING ELECTRIC  ,/,               CASOUT    129
     1 12X,5HCURVE,F5.2,2X,17HCORRECTION FACTOR,F5.2,2X,6HACTUAL,       CASOUT    130
     3  F7.3,/)                                                         CASOUT    131
210   FORMAT(12X,2HE(,I1,34H)=FAN COILS OR COOLING TOWER FAN..,F12.5,   CASOUT    132
     +   3X,2HKW,5X,F12.5,3X,2HKW,/,                                    CASOUT    133
     1 12X,2HE(,I1,34H)=VARIABLE AIR VOL SYS.............,F12.5,3X,2HKW, CASOUT    134
     +   5X,F12.5,3X,2HKW,/,                                            CASOUT    135
     2 12X,2HE(,I1,34H)=CONTROLS AND ACCES...............,F12.5,3X,2HKW, CASOUT    136
     +   5X,F12.5,3X,2HKW,/,                                            CASOUT    137
     3 12X,2HE(,I1,34H)=WATER CIRCULATORS................,F12.5,3X,2HKW, CASOUT    138
     +   5X,F12.5,3X,2HKW,/,                                            CASOUT    139
     + 12X,2HE(,I1,34H)=RETURN/EXHAUST FAN...............,F12.5,3X,2HKW CASOUT    140
     +   ,5X,F12.5,3X,2HKW,/,                                           CASOUT    141
     5 12X,2HE(,I1,34H)=OUTDOOR AIR COIL.................,F12.5,3X,2HKW CASOUT    142
     +    ,5X,F12.5,3X,2HKW,/,                                          CASOUT    143
     +12X,2HE(,I1,34H)=BOILER FEED + LUBE PUMP..........,F12.5,3X,2HKW  CASOUT    144
     +    ,5X,F12.5,3X,2HKW)                                            CASOUT    145
  215 FORMAT(12X,34HMOTOR SHAFT POWER................,F12.2,3X,2HHP,/, CASOUT    146
     +        12X,34HMOTOR PURCHASED POWER.............,F12.2,3X,2HKW,/, CASOUT    147
     +        12X,34HTOTAL PURCHASED POWER.............,F12.2,3X,2HKW,/, CASOUT    148
     +        12X,34HEXPORTED POWER....................,F12.2,3X,2HKW,/, CASOUT    149
     +        12X,34HGENERATOR LOAD....................,F12.2,3X,2HKW)  CASOUT    150
220   FORMAT(12X,34H                                    ,21H---------- CASOUT    151
     +-------,3X,18H-----------------,/,                                CASOUT    152
     +   12X,37HTOTAL ELECTRIC POWER GENERATED........,F12.5,3X,2HKW,   CASOUT    153
     +  5X,F12.5,3X,12HPURCHASED KW,/)                                  CASOUT    154
  230 FORMAT(12X,25HDUAL COMPRESSOR OPERATION,/,                        CASOUT    155
     +        12X,3HCOP,F5.2,2X,21HO/A CORRECTION FACTOR,F5.2,2X,       CASOUT    156
     +        6HACTUAL,F5.2)                                            CASOUT    157
  240 FORMAT(12X,24HBASE COMPRESSOR RATING...F5.1,1X,14HPERCENT LOAD...CASOUT    158
     +        F5.1,/,                                                   CASOUT    159
     +        12X,24HNON-BASE COMP.  RATING...F5.1,1X,14HPERCENT LOAD...CASOUT    160
     +        F5.1,/,)                                                  CASOUT    161
  250 FORMAT(12X,34HPARASITIC SHAFT POWER.............,                 CASOUT    162
     +        F12.2,3X,2HHP,/,                                          CASOUT    163
     +        12X,34HBASE COMPRESSOR SHAFT POWER........,F12.2,3X,2HHP,/, CASOUT    164
     +        12X,34HNON-BASE COMPRESSOR SHAFT POWER....,F12.2,3X,2HHP,/, CASOUT    165
     +        12X,34HTURBINE SHAFT POWER...............,F12.2,3X,2HHP,/, CASOUT    166
     +        12X,34HNAMEPLATE COOLING.................,F12.2,3X,4HTONS) CASOUT    167
  260 FORMAT(12X,37HREDISTRIBUTED ELECTRIC POWER..........,            CASOUT    168
     +        F12.5,3X,2HKW,5X,F12.5,3X,12HPURCHASED KW,/)              CASOUT    169
```

```
270   FORMAT(4H0    ,"T71",6X,"T72",6X,"T73",6X,"T81",6X,"T82",6X,        CASOUT   170
     +               "T83",6X,"TWB",6X,"T33",6X,"T34",6X,"T14",/,          CASOUT   171
     +              10(F7.2,2X))                                           CASOUT   172
280   FORMAT(4H0    ,"X30",7X,"DTO",7X,"X3 ",7X,"DOT",7X," R ",           CASOUT   173
     +                7X,"ETD",7X,"34D",/,7(F8.2,2X),"    Q14=",F12.2)     CASOUT   174
      RETURN                                                              CASOUT   175
      END                                                                 CASOUT   176
      FUNCTION SUME(A)                                                    SUME       2
      COMMON/TGCM/ETACON,ETAMM,ETAGG,FLMC,FLTS,Q16,FLWF,ETA1,ETAG,T14     SUME       3
C---SUMMATION OF ELECTRICAL LOADS                                         SUME       4
      COMMON/TVAL/COPC1(10),VTIC1(10),CF1(10),PWR1(10),                   SUME       5
     +            COPC2(10),VTIC2(10),CF2(10),PWR2(10),                   SUME       6
     +            VETH(10),VTIETH(10),CFE(10),PWRE(10)                    SUME       7
      COMMON/CONTR/NSTART,NCASES,NCOPC1,ICOPC1,TITLE(50),                 SUME       8
     +             NCOPC2,ICOPC2,NETH,IETH,NEXT,NCF1,                     SUME       9
     +             NCF2,NCFE                                              SUME      10
      COMMON/SVALGL/XNP,ETAGEN,ETAM,ETAB,TV,MDIAG,PCT,                    SUME      11
     +              DTATR,SCFMOL,SCFMVL,E7,IE(7),SV(10),                  SUME      12
     +              SQB(10),SCFMV,EPSV                                    SUME      13
      COMMON/ELEC/SEVEN,LOADEDT,XMSHP,TPKW,XNMGLD,EXPKW,                  SUME      14
     +            GENLD,XMPKW,PURNEW,GENNEW                               SUME      15
      COMMON/CALC/K,Q14,Q1,Q12,Q13,Q15,Q34,X,TSHP,Q33,Q9,                 SUME      16
     +            Q5,Q11,Q8,C1,C2,ETH,Q7,ACCPWR,ATNPWR,                   SUME      17
     +            PCPWR,T1,SCFMEC,ECMAX,Q24,Q8T,Q8TM,Q12M,                SUME      18
     +            Q14M,Q5M,NSPM                                           SUME      19
      COMMON/SU/E1CON1,E2CON1,NP,E2CON2,E2CON3,E3CON1,E3CON3,             SUME      20
     +          E4CON1,E5CON1,E5CON2,E6CON1,SCFMOUT,E(7)                  SUME      21
      COMMON/CORFAC/C1FAC,C2FAC,CFFAC,DAYNO,HOURNO,FLAG                   SUME      22
      COMMON/IODEV/IN,OUT                                                 SUME      23
      COMMON/XNLOAD/XNPC1,XNPC2,XNPT,AC1,AC2,AETH,NDUAL,                  SUME      24
     +              NREV,XNPBS,XNPBL,XNPBH,XKOA,XNPB,                     SUME      25
     +              XNPNB,BLOAD,XNBLD,GCF,ECF,DRATE                       SUME      26
      COMMON/SCALC/T33,T34,T0,U73,U74,U83,U84,A73,A74,A83,A84,            SUME      27
     +            G7,G8,TWB,DT,T71,T73,T81,T72,T82,T83,DTB2T81            SUME      28
      COMMON/S2CALC/KFLAG,X30LD,X3,DOTOLD,DOTM,R,NR,ETAD                  SUME      29
      COMMON/S3CALC/G1,A14,U14,T12,H34AD                                  SUME      30
C                                                                         SUME      31
C---A=1 - GENERATED                                                       SUME      32
C---A=2 - PURCHASED                                                       SUME      33
      IF(A.NE.(2.)) GO TO 8                                               SUME      34
      DO 5 I=1,7                                                          SUME      35
      IE(I)=IABS(IF(I)-1)                                                 SUME      36
    5 CONTINUE                                                            SUME      37
    8 CONTINUE                                                            SUME      38
      IF(NSPM.EQ.1) GO TO 10                                              SUME      39
C                                                                         SUME      40
C---NON-SYS PERF MODE CALC                                                SUME      41
      E(1)=E1CON1*(Q7+Q8T)*IE(1)                                          SUME      42
      E(2)=E2CON1*(XNP/E2CON2+(2./3.)*Q1/12000.)*IE(2)                    SUME      43
      E(3)=(E3CON1*XNP+E3CON3*Q11)*IE(3)                                  SUME      44
      E(4)=E4CON1*((Q14/10)+(Q5/25))*IE(4)                                SUME      45
      E(5)=E5CON1*(SCFMVL+ECMAX-SCFMEC)*IE(5)                             SUME      46
      E(6)=E6CON1*SCFMOUT*IE(6)                                           SUME      47
      E(7)=E7*IE(7)                                                       SUME      48
      GO TO 20                                                            SUME      49
   10 CONTINUE                                                            SUME      50
C                                                                         SUME      51
C---SYS PERF MODE CALC                                                    SUME      52
      E1A=E1CON1*Q7                                                       SUME      53
      E1B=E1CON1*(0.3+0.7*Q8T/Q8TM)*Q8TM                                  SUME      54
      IF(Q8T.EQ.(0.)) E1B=0.0                                             SUME      55
      E(1)=(E1A+E1B)*IE(1)                                                SUME      56
      E(2)=E2CON1*(XNP/E2CON2+(2./3.)*Q1/12000.)*IE(2)                    SUME      57
```

```
      E(3)=(E3CON1*XNP+E3CON3*Q11)*IE(3)                                SUME
      E4A=.000007*(0.4+0.6*Q14/Q14M)*Q14M                               SUME
      E4B=.0000028*(0.4+0.6*Q5/Q5M)*Q5M                                 SUME
      IF(Q14.LT.(.1)) E4A=0.0                                           SUME
      IF(Q5.EQ.(0.)) E4B=0.0                                            SUME
      E(4)=(E4A+E4B)*IF(4)                                              SUME
      E(5)=E5CON1*(SCFMVL+ECMAX-SCFMFC)*IF(5)                           SUME
      IF(Q12.EQ.(0.)) E(6)=0.0                                          SUME
      IF(Q12.GT.(0.))                                                   SUME
     +  E(6)=E6CON1*(0.3+0.7*SCFMOUT/SCFMOL)*SCFMOL*IE(6)               SUME
      E(7)=E7*IF(7)                                                     SUME
   20 CONTINUE                                                          SUME
      SUME=E(1)+E(2)+E(3)+E(4)+E(5)+E(6)+E(7)                           SUME
      IF(A.NE.(2.)) GO TO 99                                            SUME
      DO 6 I=1,7                                                        SUME
      IE(I)=IABS(IE(I)-1)                                               SUME
    6 CONTINUE                                                          SUME
   99 RETURN                                                            SUME
      END                                                               SUME
      SUBROUTINE TLU(A,B,C,D,N)                                         TLU
C           LINEAR INTERPOLATION ROUTINE                                TLU
C     A= INDEPENDENT VARIABLE                                           TLU
C     B= DEPENDENT VARIABLE  (ANSWER)                                   TLU
C     C= INDEPENDENT TABLE                                              TLU
C     D= DEPENDENT TABLE                                                TLU
C     N= NUMBER OF POINTS IN TABLE                                      TLU
C     INDEPENDENT TABLE MUST BE SORTED, EITHER ASCENDING OR DESCENDING  TLU
      DIMENSION C(1),D(1)                                               TLU
      IF(N-1)1,2,3                                                      TLU
    1 B=0.                                                              TLU
      GO TO 100                                                         TLU
    2 B=D(1)                                                            TLU
      GO TO 100                                                         TLU
    3 ML=1                                                              TLU
      MU=N                                                              TLU
    8 IF(MU-ML-1) 15,15,9                                               TLU
    9 M=(MU+ML)/2                                                       TLU
      IF(C(1)-C(2))11,2,10                                              TLU
   10 IF(C(M)-A)13,12,14                                                TLU
   11 IF(A-C(M))13,12,14                                                TLU
   12 B=D(M)                                                            TLU
      GO TO 100                                                         TLU
   13 MU=M                                                              TLU
      GO TO 8                                                           TLU
   14 ML=M                                                              TLU
      GO TO 8                                                           TLU
   15 B=D(ML)+(D(MU)-D(ML))*((A-C(ML))/(C(MU)-C(ML)))                   TLU
  100 RETURN                                                            TLU
      END                                                               TLU
```

ATTACHMENT D

ELECTRICAL DRIVE CONCEPT MODEL - PROGRAM LISTING

```
      PROGRAM PERCNG(INPUT,OUTPUT,B,TAPE5=INPUT,TAPE6=OUTPUT,TAPE7=B)
      COMMON/TGCM/ETACON,ETAMM,ETAGG,ELMC,ELTS,Q16,FLWF,ETA1,ETAG,T14
C     ***********************************************************
C     *                                                         *
C     *   THIS IS CONCEPT B-4 (VITT)                            *
C     *   ELECTRICAL COUPLING                                   *
C     *   FOR USE WITH FREON R-12                               *
C     *   FEBRUARY 25, 1979      BILL LOSS - MTI                *
C     *                                                         *
C     ***********************************************************
      COMMON/TVAL/COPC1(10),VT1C1(10),CF1(10),PWR1(10),
     +            COPC2(10),VT1C2(10),CF2(10),PWR2(10),
     +            VETH(10),VT1ETH(10),CFF(10),PWRF(10)
      COMMON/CONTR/NSTART,NCASES,NCOPC1,ICOPC1,TITLE(50),
     +             NCOPC2,ICOPC2,NETH,IETH,NEXT,NCF1,
     +             NCF2,NCFF
      COMMON/SVALGL/XNP,ETAGEN,ETAM,ETAB,TV,MDIAG,PCT,
     +              DTAIR,SCFMOL,SCFMVL,E7,IE(7),SV(10),
     +              SQB(10),SCFMV,EPSV
      COMMON/ELEC/SEVEN,LOADFDT,XMSHP,TPKW,XNMGLD,EXPKW,
     +            GENLD,XMPKW,PURNFW,GENNFW
      COMMON/CALC/K,Q14,Q1,Q12,Q13,Q15,Q34,X,TSHP,Q33,Q9,
     +            Q5,Q11,Q8,C1,C2,ETH,Q7,ACCPWR,AINPWR,
     +            PCPWR,T1,SCFMEC,ECMAX,Q24,Q8T,Q8TM,Q12M,
     +            Q14M,Q5M,NSPM
      COMMON/SU/E1CON1,E2CON1,NP,F2CON2,F2CON3,E3CON1,E3CON3,
     +          E4CON1,E5CON1,E5CON2,E6CON1,SCFMOUT,E(7)
      COMMON/CORFAC/C1FAC,C2FAC,CEFAC,DAYNO,HOURNO,FLAG
      COMMON/IODEV/IN,OUT
      COMMON/XNLOAD/XNPC1,XNPC2,XNPT,AC1,AC2,AETH,NDUAL,
     +              NREV,XNPBS,XNPBL,XNPBH,XKOA,XNPB,
     +              XNPNB,BLOAD,XNBLD,GCF,ECF,DRATE
      COMMON/SCALC/T33,T34,T0,U73,U74,U83,U84,A73,A74,A83,A84,
     +             G7,G8,TWB,DT,T71,T73,T81,T72,T82,T83,DT82T81
      COMMON/S2CALC/KFLAG,X3OLD,X3,DOTOLD,DOTM,R,NR,ETAD
      COMMON/S3CALC/G1,A14,U14,T12,H34AD
      DIMENSION TR(11),WB(11)
      INTEGER DAYNO,HOURNO,OUT
      DATA ACCPWR,E1CON1,F2CON1,E2CON2/2545.0,0.0000054,0.4,3.0/
      DATA E2CON3,E3CON1,E3CON3/.66,.0325,0.00000097/
      DATA E4CON1,E5CON1,E5CON2,E6CON1/0.00007,0.000181,74.0,0.00016/
      DATA Q13CON1,Q13CON2,Q12CON1/1.08,50.,1.08/
      DATA TR/5.,15.,25.,35.,45.,55.,65.,75.,85.,95.,105./
      DATA WB/4.8,14.3,23.7,32.,41.2,50.5,58.5,64.6,69.3,73.,75./
      NTWB=11
      IN=5
      OUT=6
C   READ IN GLOBAL VARIABLES
5     CALL GLOBIN
C
C---SET VALUES TO RUN (NON) PERF MODEL
      Q12M=Q12CON1*SCFMOL*DTAIR
      Q5M=Q8TM
      IF(NSPM.EQ.0) NDUAL=NREV=NCOPT=LOADFDT=0
      IF(NSPM.EQ.0) XNPC1=XNPC2=XNPT=.01
      IF(NSPM.EQ.0) Q12M=Q14M=.01
C   WRITE OUT GLOBAL PARAMETERS
      CALL GLBOUT
C
C---INITIALIZE TOTALS AND MAXS
      GCF=GCF/1000000.
      COG=COEP=CREP=AUDC=TAOPC=0.0
      BTUS=TOTQ14=Q14MAX=TPMAX=SCOST=TOTQ2=0.0
```

```
      Q9334MAX=0.0                                                      PERCNG    66
      Q34MAX=Q33MAX=Q11MAX=Q8TMAX=Q5MAX=0.0                             PERCNG    67
      Q1MAX=Q7MAX=0.                                                    PERCNG    68
      Q15MAX=Q13MAX=Q12MAX=Q9MAX=0.0                                    PERCNG    69
      TMAX=C1MAX=C2MAX=0.0                                              PERCNG    70
      TC1=TC2=THR=C1HR=C2HR=0.0                                         PERCNG    71
      TOTBTUE=TOTKW=0.0                                                 PERCNG    72
      TOTQBT=TOTQ12=TOTQ13=0.0                                          PERCNG    73
      GENMAX=XMSMAX=TOTQ1=TOTQ7=0.0                                     PERCNG    74
      TOTQ24=TOTQ15=TOTKWU=TOTKWM=TOTKWF=0.0                            PERCNG    75
      SAVEVL=SCFMVL                                                     PERCNG    76
C   GO THROUGH THE NUMBER OF CASES                                      PERCNG    77
      DO 11 N=1,NCASES                                                  PERCNG    78
      WRITE(OUT,33)                                                     PERCNG    79
C   READ IN VALUES FOR T1,Q1,Q7                                         PERCNG    80
      READ(IN,25) DAYNO,HOURNO,T1,Q1,Q7                                 PERCNG    81
      IF(Q1.EQ.(0.).AND.Q7.EQ.(0.)) GO TO 11                            PERCNG    82
      OUT=7                                                             PERCNG    83
      IF(DAYNO.NE.0) OUT=6                                              PERCNG    84
C                                                                       PERCNG    85
C---LOAD SCALING FACTOR                                                 PERCNG    86
      Q1=Q1*(.714)                                                      PERCNG    87
      Q7=Q7*(.714)                                                      PERCNG    88
C                                                                       PERCNG    89
C---RESET VARIABLES FOR EACH CASE                                       PERCNG    90
      XMSHP=XMPKW=TPKW=XNMGLD=EXPKW=GENLD=0.0                           PERCNG    91
      PURNEW=GENNEW=0.0                                                 PERCNG    92
      Q9=Q12=Q13=Q15=0.0                                                PERCNG    93
      Q8T=1.                                                            PERCNG    94
      SCFMEC=0.0                                                        PERCNG    95
      SCFMOUT=SCFMV=0.0                                                 PERCNG    96
      T72=T81=T82=T83=0.0                                               PERCNG    97
      T71=CT33=DT82T81=0.0                                              PERCNG    98
      XKOA=1.0                                                          PERCNG    99
      XNPBL=XNPR=XNPC1                                                  PERCNG   100
      XNPBH=XNPNR=XNPC2                                                 PERCNG   101
C                                                                       PERCNG   102
C---COPC1,COPC2,ETATH                                                   PERCNG   103
      CALL TLU(T1,AC1,VT1C1,COPC1,NCOPC1)                               PERCNG   104
      CALL TLU(T1,AETH,VT1ETH,VETH,NETH)                                PERCNG   105
      C1=AC1                                                            PERCNG   106
      ETH=AETH                                                          PERCNG   107
C                                                                       PERCNG   108
      CALL TLU(T1,TWB,TR,WB,NTWB)                                       PERCNG   109
C---IS IT POSSIBLE TO ECONOMIZE COOLING                                 PERCNG   110
      IF(T1.GT.(62.).OR.Q1.EQ.(0.)) GO TO 150                           PERCNG   111
C                                                                       PERCNG   112
C---Q15 PATH-ECONOMIZE COOLING                                          PERCNG   113
      IF(T1.LT.(50.))GO TO 125                                          PERCNG   114
      Q15MAX=Q1*(TV-T1)/(TV-(50.))                                      PERCNG   115
      SCFMEC=(Q15MAX/1.08)/(TV-T1)                                      PERCNG   116
      IF(SCFMEC.GT.ECMAX) SCFMEC=ECMAX                                  PERCNG   117
      Q15=(1.08)*(SCFMEC)*(TV-T1)                                       PERCNG   118
      GO TO 150                                                         PERCNG   119
  125 SCFMEC=(Q1/1.08)/(TV-T1)                                          PERCNG   120
      IF(SCFMEC.GT.ECMAX) SCFMEC=ECMAX                                  PERCNG   121
      Q15=(1.08)*(SCFMEC)*(TV-T1)                                       PERCNG   122
  150 Q24=Q1-Q15                                                        PERCNG   123
      SCFMVL=SAVEVL+SCFMEC                                              PERCNG   124
      K=0                                                               PERCNG   125
      CALL CALCU                                                        PERCNG   126
  155 PQ8=Q8                                                            PERCNG   127
      CALL CALCU
```

```
      IF((ABS(PQ8-Q8)).GT.PCT) GO TO 155                                PERCNG   128
      IF(Q8.LT.0) GO TO 200                                             PERCNG   129
  170 PQ8=Q8                                                            PERCNG   130
C                                                                       PERCNG   131
C---Q8T PATH-COOLING LOAD TOWER                                         PERCNG   132
      Q8T=Q8                                                            PERCNG   133
      CALL CALCU                                                        PERCNG   134
      CALL CALCU                                                        PERCNG   135
      CALL CALCU                                                        PERCNG   136
      IF((ABS(PQ8-Q8)).GT.PCT) GO TO 170                                PERCNG   137
      FLAG=5                                                            PERCNG   138
      GO TO 99                                                          PERCNG   139
C                                                                       PERCNG   140
C---Q13 PATH-ADD VENTILATING AIR FLOW                                   PERCNG   141
  200 X1=SCFMV                                                          PERCNG   142
      Y1=Q8                                                             PERCNG   143
      SCFMV=SCFMVL                                                      PERCNG   144
      K=0                                                               PERCNG   145
      Q13=Q13CON1*SCFMV*EPSV*(TV-Q13CON2)                               PERCNG   146
      Q8T=0.0                                                           PERCNG   147
      CALL CALCU                                                        PERCNG   148
  201 PQ8=Q8                                                            PERCNG   149
      CALL CALCU                                                        PERCNG   150
      IF((ABS(PQ8-Q8)).GT.PCT) GO TO 201                                PERCNG   151
      IF(Q8.LT.0) GO TO 300                                             PERCNG   152
      X2=SCFMV                                                          PERCNG   153
      Y2=Q8                                                             PERCNG   154
      SCFMV=1.                                                          PERCNG   155
      Q13=Q13CON1*SCFMV*EPSV*(TV-Q13CON2)                               PERCNG   156
  211 PQ8=Q8                                                            PERCNG   157
      CALL CALCU                                                        PERCNG   158
      IF((ABS(PQ8-Q8)).GT.PCT) GO TO 211                                PERCNG   159
      IF(Q8.GT.0) GO TO 206                                             PERCNG   160
  202 S=(Y2-Y1)/(X2-X1)                                                 PERCNG   161
      B=Y1-X1*S                                                         PERCNG   162
      SCFMV=X2-(X2*S+B)/S                                               PERCNG   163
      Q13=Q13CON1*SCFMV*EPSV*(TV-Q13CON2)                               PERCNG   164
      XNPB=XNPBL                                                        PERCNG   165
      XNPNB=XNPBH                                                       PERCNG   166
  203 PQ8=Q8                                                            PERCNG   167
      CALL CALCU                                                        PERCNG   168
      IF((ABS(PQ8-Q8)).GT.PCT) GO TO 203                                PERCNG   169
      IF(ABS(Q8).LT.(10.)) GO TO 204                                    PERCNG   170
      X2=X1                                                             PERCNG   171
      Y2=Y1                                                             PERCNG   172
      X1=SCFMV                                                          PERCNG   173
      Y1=Q8                                                             PERCNG   174
      GO TO 202                                                         PERCNG   175
  204 XNPB=XNPBL                                                        PERCNG   176
      XNPNB=XNPBH                                                       PERCNG   177
  205 PQ8=Q8                                                            PERCNG   178
      CALL CALCU                                                        PERCNG   179
      IF((ABS(PQ8-Q8)).GT.PCT) GO TO 205                                PERCNG   180
      FLAG=2                                                            PERCNG   181
      IF(SCFMV.LT.(0.)) GO TO 206                                       PERCNG   182
      GO TO 99                                                          PERCNG   183
  206 SCFMV=0.0                                                         PERCNG   184
      Q13=Q13CON1*SCFMV*EPSV*(TV-Q13CON2)                               PERCNG   185
  207 PQ8=Q8                                                            PERCNG   186
      CALL CALCU                                                        PERCNG   187
      IF((ABS(PQ8-Q8)).GT.PCT) GO TO 207                                PERCNG   188
      GO TO 400                                                         PERCNG   189
C                                                                       PERCNG   190
```

```
C---Q12 PATH-ADD OUTSIDE AIR FLOW                                      PERCNG    191
  300 X1=SCFMOUT                                                       PERCNG    192
      Y1=Q8                                                            PERCNG    193
      SCFMOUT=SCFMOL                                                   PERCNG    194
      K=0                                                              PERCNG    195
      Q12=Q12CON1*SCFMOUT*DTAIR                                        PERCNG    196
      CALL CALCU                                                       PERCNG    197
  301 PQ8=Q8                                                           PERCNG    198
      CALL CALCU                                                       PERCNG    199
      IF((ABS(PQ8-Q8)).GT.PCT) GO TO 301                               PERCNG    200
      IF(Q8.LT.0) GO TO 400                                            PERCNG    201
      SCFMOUT=SCFMOUT/40.                                              PERCNG    202
      CALL CALCU                                                       PERCNG    203
  309 PQ8=Q8                                                           PERCNG    204
      CALL CALCU                                                       PERCNG    205
      IF((ABS(PQ8-Q8)).GT.PCT) GO TO 309                               PERCNG    206
      X2=SCFMOUT                                                       PERCNG    207
      Y2=Q8                                                            PERCNG    208
  302 S=(Y2-Y1)/(X2-X1)                                                PERCNG    209
      B=Y1-X1*S                                                        PERCNG    210
      SCFMOUT=X2-(X2*S+B)/S                                            PERCNG    211
      Q12=Q12CON1*SCFMOUT*DTAIR                                        PERCNG    212
  303 PQ8=Q8                                                           PERCNG    213
      CALL CALCU                                                       PERCNG    214
      IF((ABS(PQ8-Q8)).GT.PCT) GO TO 303                               PERCNG    215
      IF(ABS(Q8).LT.(10.)) GO TO 304                                   PERCNG    216
      X2=X1                                                            PERCNG    217
      Y2=Y1                                                            PERCNG    218
      X1=SCFMOUT                                                       PERCNG    219
      Y1=Q8                                                            PERCNG    220
      GO TO 302                                                        PERCNG    221
  304 FLAG=3                                                           PERCNG    222
      IF(SCFMOUT.LT.(0.)) GO TO 305                                    PERCNG    223
      GO TO 99                                                         PERCNG    224
  305 SCFMOUT=0.0                                                      PERCNG    225
      Q12=Q12CON1*SCFMOUT*DTAIR                                        PERCNG    226
  306 PQ8=Q8                                                           PERCNG    227
      CALL CALCU                                                       PERCNG    228
      IF((ABS(PQ8-Q8)).GT.PCT) GO TO 306                               PERCNG    229
      GO TO 400                                                        PERCNG    230
C                                                                      PERCNG    231
C---Q9 PATH-ADD DIRECT STEAM                                           PERCNG    232
  400 K=0                                                              PERCNG    233
  401 PQ9=Q9                                                           PERCNG    234
      BQ8=Q8                                                           PERCNG    235
      Q9=Q9+ABS(Q8)                                                    PERCNG    236
  402 PQ8=Q8                                                           PERCNG    237
      CALL CALCU                                                       PERCNG    238
      IF((ABS(PQ8-Q8)).GT.PCT) GO TO 402                               PERCNG    239
      IF(Q8.LT.0) GO TO 401                                            PERCNG    240
      FQ9=(-Q8/((BQ8-Q8)/(PQ9-Q9)))+Q9                                 PERCNG    241
      Q9=FQ9                                                           PERCNG    242
      CALL CALCU                                                       PERCNG    243
  403 PQ8=Q8                                                           PERCNG    244
      CALL CALCU                                                       PERCNG    245
      IF((ABS(PQ8-Q8)).GT.PCT) GO TO 403                               PERCNG    246
      FLAG=4                                                           PERCNG    247
C                                                                      PERCNG    248
   99 CONTINUE                                                         PERCNG    249
C---OUTPUT                                                             PERCNG    250
C                                                                      PERCNG    251
      CALL CASOUT                                                      PERCNG    252
C                                                                      PERCNG    253
```

```
C---SAVE TOTALS AND MAXS
      CMP1=Q12/(C1*2545.)
      CMP2=Q14/(C2*2545.)
      IF(TSHP.GT.TMAX) TMAX=TSHP
      IF(GENLD.GT.GENMAX) GENMAX=GENLD
      IF(XMSHP.GT.XMSMAX) XMSMAX=XMSHP
      IF(TPKW.GT.TPMAX) TPMAX=TPKW
      IF(CMP1.GT.C1MAX) C1MAX=CMP1
      IF(Q1.GT.Q1MAX) Q1MAX=Q1
      IF(Q7.GT.Q7MAX) Q7MAX=Q7
      IF(CMP2.GT.C2MAX) C2MAX=CMP2
      IF(Q34.GT.Q34MAX) Q34MAX=Q34
      IF(Q33.GT.Q33MAX) Q33MAX=Q33
      IF((Q33+Q9).GT.Q933MAX) Q933MAX=Q33+Q9
      IF(Q11.GT.Q11MAX) Q11MAX=Q11
      IF(Q8T.GT.Q8TMAX) Q8TMAX=Q8T
      IF(Q5.GT.Q5MAX) Q5MAX=Q5
      IF(Q15.GT.Q15MAX) Q15MAX=Q15
      IF(Q14.GT.Q14MAX) Q14MAX=Q14
      IF(Q13.GT.Q13MAX) Q13MAX=Q13
      IF(Q12.GT.Q12MAX) Q12MAX=Q12
      IF(Q9.GT.Q9MAX) Q9MAX=Q9
      TC1=TC1+(CMP1*HOURNO)
      TC2=TC2+(CMP2*HOURNO)
      IF(CMP1.GT.(.1)) C1HR=C1HR+HOURNO
      IF(CMP2.GT.(.1)) C2HR=C2HR+HOURNO
      THR=THR+HOURNO
      TIMEKW=SUME(1)*HOURNO
      TIMEBTU=3413.*((GENNEW+EXPKW)*HOURNO)/(ETAGEN*ETAM*ETAB*ETH)
      TOTKW=TOTKW+TIMEKW
      TOTBTUE=TOTBTUE+TIMEBTU
      BTUS=BTUS+(Q11*HOURNO)
      TOTQ8T=TOTQ8T+(Q8T*HOURNO)
      TOTQ12=TOTQ12+(Q12*HOURNO)
      TOTQ13=TOTQ13+(Q13*HOURNO)
      TOTQ14=TOTQ14+(Q14*HOURNO)
      TOTQ1=TOTQ1+(Q1*HOURNO)
      TOTQ7=TOTQ7+(Q7*HOURNO)
      TOTQ24=TOTQ24+(Q24*HOURNO)
      TOTQ9=TOTQ9+(Q9*HOURNO)
      TOTQ15=TOTQ15+(Q15*HOURNO)
      TOTKWU=TOTKWU+(PURNEW*HOURNO)
      TOTKWM=TOTKWM+(TPKW*HOURNO)
      TOTKWE=TOTKWE+(EXPKW*HOURNO)
C
C---END LOOP - NEXT CASE
   11 CONTINUE
C
C---DROP OUT - WRITE TOTALS AND MAXS
      OUT=6
      WRITE(OUT,56) TOTQ1,TOTQ7,TOTQ24,BTUS,TOTQ15,TOTKW,
     +  TOTKWU,TOTKWM,TOTKWE,TOTBTUE,TOTQ8T,TOTQ12,TOTQ13,TOTQ9
      WRITE(OUT,624) TC1,TC2,C1HR,C2HR,THR
      WRITE(OUT,324) TMAX,XMSMAX,GENMAX,C1MAX,C2MAX,TPMAX,
     +               Q34MAX,Q33MAX,Q11MAX,Q8TMAX,Q5MAX,
     +               Q15MAX,Q14MAX,Q13MAX,Q12MAX,Q933MAX,Q9MAX
C
      WRITE(OUT,700) Q1MAX,Q7MAX
C---OPERATING COST
      COG=GCF*BTUS
      COEP=ECF*TOTKWM
      CREP=ECF*TOTKWE
      AUDC=TPMAX*DRATE*12.
```

```
      TAOPC=(COG+COFP+AUDC)-CREP                                        PERCNG    317
      WRITE(OUT,524) COG,COFP,CREP,AUDC,TAOPC                           PERCNG    318
C                                                                       PERCNG    319
C  SEE IF THERE IS MORE INPUT                                           PERCNG    320
      IF(NEXT.EQ.1)GO TO 5                                              PERCNG    321
C                                                                       PERCNG    322
C   FORMATS                                                             PERCNG    323
   56 FORMAT(1H1,///,"   TOTAL =",F20.1," BTU Q1 * TIME",/,             PERCNG    324
     +    "   TOTAL =",F20.1," BTU Q7 * TIME",/,                        PERCNG    325
     +    "   TOTAL =",F20.1," BTU Q24 * TIME",/,                       PERCNG    326
     +    "   TOTAL =",F20.1," BTU Q11 * TIME",/,                       PERCNG    327
     +    "   TOTAL =",F20.1," BTU Q15 * TIME",/,                       PERCNG    328
     +    "   TOTAL =",F20.1," KW HR REQUIRED BY PARASITICS",/,         PERCNG    329
     +    "   TOTAL =",F20.1," KW HR PURCHASED FOR PARASITICS",/,       PERCNG    330
     +    "   TOTAL =",F20.1," KW HR PURCHASED (MOTOR + PARA) TOTAL",/, PERCNG    331
     +    "   TOTAL =",F20.1," KW HR EXPORTED TO UTILITY",/,            PERCNG    332
     1    "   TOTAL =",F20.1," BTU TO GENERATE ELECTRICAL POWER",/,     PERCNG    333
     +    "   TOTAL =",F20.1," BTU Q8T * TIME",/,                       PERCNG    334
     +    "   TOTAL =",F20.1," BTU Q12 * TIME",/,                       PERCNG    335
     +    "   TOTAL =",F20.1," BTU Q13 * TIME",/,                       PERCNG    336
     +    "   TOTAL =",F20.1," BTU Q9  * TIME",/)                       PERCNG    337
  524 FORMAT(1H0,8X,"COST OF GAS.....................",F20.2,/,       PERCNG    338
     +            9X,"COST OF PUR ELECTRIC...........",F20.2,/,        PERCNG    339
     +            9X,"CREDIT FOR EXP POWER...........",F20.2,/,        PERCNG    340
     +            9X,"ANNUAL UTIL DEMAND CHARGES....",F20.2,/,          PERCNG    341
     +            9X,"TOTAL ANNUAL OPERATING COST...",F20.2,/)          PERCNG    342
  324 FORMAT(10X,"MAX TSHP =",F20.1," HP",/,                            PERCNG    343
     +     10X,"MAX MSHP =",F20.1," HP",/,                              PERCNG    344
     +     10X,"MAX GEN  =",F20.1," KW",/,                              PERCNG    345
     +     10X,"MAX CMP1 =",F20.1," HP",/,                              PERCNG    346
     +     10X,"MAX CMP2 =",F20.1," HP",/,                              PERCNG    347
     +     10X,"MAX TPPW =",F20.1," KW",/,                              PERCNG    348
     +     10X,"MAX  Q34 =",F20.1," BTU",/,                             PERCNG    349
     +     10X,"MAX  Q33 =",F20.1," BTU",/,                             PERCNG    350
     +     10X,"MAX  Q11 =",F20.1," BTU",/,                             PERCNG    351
     +     10X,"MAX  Q8T =",F20.1," BTU",/,                             PERCNG    352
     +     10X,"MAX   Q5 =",F20.1," BTU",/,                             PERCNG    353
     +     10X,"MAX  Q15 =",F20.1," BTU",/,                             PERCNG    354
     +     10X,"MAX  Q14 =",F20.1," BTU",/,                             PERCNG    355
     +     10X,"MAX  Q13 =",F20.1," BTU",/,                             PERCNG    356
     +     10X,"MAX  Q12 =",F20.1," BTU",/,                             PERCNG    357
     +     10X,"MAX Q933 =",F20.1," BTU",/,                             PERCNG    358
     +     10X,"MAX   Q9 =",F20.1," BTU",/,)                            PERCNG    359
700   FORMAT(1H+,9X"MAX Q1 =",F20.1," BTU",/,                           PERCNG    360
     +        10X,"MAX Q7 =",F20.1," BTU",/)                            PERCNG    361
   15 FORMAT(3F10.3,2I5)                                                PERCNG    362
   25 FORMAT(2I5,3F10.0)                                                PERCNG    363
   33 FORMAT(1H1)                                                       PERCNG    364
  624 FORMAT(3X,"TOTAL =",F20.1," C1 * TIME",/,                         PERCNG    365
     +          "   TOTAL =",F20.1," C2 * TIME",/,                     PERCNG    366
     +          "   TOTAL =",F20.1," C1 HOURS ",/,                     PERCNG    367
     +          "   TOTAL =",F20.1," C2 HOURS ",/,                     PERCNG    368
     +          "   TOTAL =",F20.1," HOURS    ",/)                     PERCNG    369
C                                                                       PERCNG    370
      STOP                                                              PERCNG    371
      END                                                               PERCNG    372
      SUBROUTINE CALCU                                                  CALCU       2
      COMMON/TGCM/ETACON,ETAMM,ETAGG,ELMC,ELTS,Q16,ELWF,ETA1,ETAG,T14   CALCU       3
C---REPEATED CALCULATIONS FOR MAIN PERCNG                               CALCU       4
      COMMON/TVAL/COPC1(10),VTIC1(10),CF1(10),PWR1(10),                 CALCU       5
     +            COPC2(10),VTIC2(10),CF2(10),PWR2(10),                 CALCU       6
     +            VFTH(10),VTIFTH(10),CFF(10),PWRF(10)                  CALCU       7
      COMMON/CONTR/NSTART,NCASES,NCOPC1,ICOPC1,TITLE(50),               CALCU       8
```

```
     +              NCOPC2,ICOPC2,NETH,IETH,NEXT,NCF1,                CALCU
     +              NCF2,NCFE                                         CALCU      10
      COMMON/SVALGL/XNP,ETAGEN,ETAM,ETAR,TV,MDIAG,PCT,                CALCU      11
     +               DTAIR,SCFMOL,SCFMVL,F7,IE(7),SV(10),             CALCU      12
     +               SOB(10),SCFMV,EPSV                               CALCU      13
      COMMON/ELEC/SEVEN,LOADEDT,XMSHP,TPKW,XNMGLD,EXPKW,              CALCU      14
     +             GENLD,XMPKW,PURNEW,GENNEW                          CALCU      15
      COMMON/CALC/K,Q14,Q1,Q12,Q13,Q15,Q34,X,TSHP,Q33,Q9,             CALCU      16
     +            Q5,Q11,Q8,C1,C2,ETH,Q7,ACCPWR,AINPWR,               CALCU      17
     +            PCPWR,T1,SCFMEC,ECMAX,Q24,Q8T,Q8TM,Q12M,            CALCU      18
     +            Q14M,Q5M,NSPM                                       CALCU      19
      COMMON/SU/E1CON1,E2CON1,NP,E2CON2,E2CON3,E3CON1,E3CON3,         CALCU      20
     +          E4CON1,E5CON1,E5CON2,E6CON1,SCFMOUT,E(7)              CALCU      21
      COMMON/CORFAC/C1FAC,C2FAC,CFFAC,DAYNO,HOURNO,FLAG               CALCU      22
      COMMON/IODEV/IN,OUT                                             CALCU      23
      COMMON/XNLOAD/XNPC1,XNPC2,XNPT,AC1,AC2,AETH,NDUAL,              CALCU      24
     +              NREV,XNPRS,XNPBL,XNPBH,XKOA,XNPB,                 CALCU      25
     +              XNPNB,BLOAD,XNBLD,GCF,ECF,DRATE                   CALCU      26
      COMMON/SCALC/T33,T34,T0,U73,U74,U83,U84,A73,A74,A83,A84,        CALCU      27
     +             G7,G8,TWB,DT,T71,T73,T81,T72,T82,T83,DT82T81       CALCU      28
      COMMON/S2CALC/KFLAG,X3OLD,X3,DOTOLD,DOTM,R,NR,ETAD              CALCU      29
      COMMON/S3CALC/G1,A14,U14,T12,H34AD                              CALCU      30
      INTEGER DAYNO,HOURNO,OUT                                        CALCU      31
C---Q14=SECOND EVAPORATOR LOAD                                        CALCU      32
C---X=SUM OF THE LOADS                                                CALCU      33
C---Q34=REFRIGERANT CONDENSER HEAT LOAD                               CALCU      34
C---TSHP=TURBINE SHAFT HORSEPOWER                                     CALCU      35
C---Q33=RANKINE CONDENSER HEAT LOAD                                   CALCU      36
C---Q5=TOTAL HEAT AVAIL                                               CALCU      37
C---Q11=TOTAL GAS INPUT ENERGY                                        CALCU      38
C---Q8=Q5-Q7                                                          CALCU      39
      K=K+1                                                           CALCU      40
      IF(K.GT.200) GO TO 10                                           CALCU      41
C                                                                     CALCU      42
      IF(Q12M.EQ.(0.)) C1FAC=C1=1.                                    CALCU      43
      IF(Q12M.EQ.(0.)) GO TO 5                                        CALCU      44
      C1LOAD=(100.*Q12)/Q12M                                          CALCU      45
      CALL TLU(C1LOAD,C1FAC,PWR1,CF1,NCF1)                            CALCU      46
      C1=AC1*C1FAC                                                    CALCU      47
C                                                                     CALCU      48
    5 CONTINUE                                                        CALCU      49
      Q14=(Q12*((1+C1)/C1))+Q13+Q24                                   CALCU      50
      IF(Q14.LT.(1.)) C2FAC=C2=2.                                     CALCU      51
      IF(Q14.LT.(1.)) GO TO 600                                       CALCU      52
      CALL COPSUB                                                     CALCU      53
C                                                                     CALCU      54
      C2LOAD=(100.*Q14)/Q14M                                          CALCU      55
      CALL TLU(C2LOAD,C2FAC,PWR2,CF2,NCF2)                            CALCU      56
      C2=AC2*C2FAC                                                    CALCU      57
C                                                                     CALCU      58
600   CONTINUE                                                        CALCU      59
      IF(T34.EQ.0.) C2=2.                                             CALCU      60
      Q34=Q14*((1+C2)/C2)                                             CALCU      61
      TSHP=Q16*ETH/2545.                                              CALCU      62
      XMSHP=(Q14/(2545.*C2)+FLMC)*1/ETAGG+FLWF                        CALCU      63
      IF(Q14.LT.1.) XMSHP=0.                                          CALCU      64
      IF(TSHP.EQ.(0.)) GO TO 333                                      CALCU      65
      X=XMSHP*.746/ETAMM-((TSHP-FLTS)*.746)*ETACON*ETAG               CALCU      66
      IF(X.GE.0.) GO TO 333                                           CALCU      67
      SEVEN=X*ETAM+SUMF(1.)                                           CALCU      68
      IF(SEVEN.LT.0.) GO TO 222                                       CALCU      69
      XMPKW=EXPKW=GENLD=0.0                                           CALCU      70
      GENNEW=ABS(X*ETAM)                                              CALCU      71
```

```
      PURNEW=SEVEN+SUME(2.)                                             CALCU
      TPKW=PURNEW+XMPKW                                                 CALCU      73
      GO TO 444                                                         CALCU      74
222   CONTINUE                                                          CALCU      75
      EXPKW=ABS(SEVEN)                                                  CALCU      76
      GENLD=EXPKW+SUME(1.)                                              CALCU      77
      PURNEW=SUME(2.)                                                   CALCU      78
      GENNEW=SUME(1.)                                                   CALCU      79
      TPKW=PURNEW                                                       CALCU      80
      XMPKW=0.0                                                         CALCU      81
      GO TO 444                                                         CALCU      82
333   XMPKW=X/ETAGEN                                                    CALCU      83
      PURNEW=SUME(1.)+SUME(2.)                                          CALCU      84
      GENNEW=GENLD=EXPKW=0.0                                            CALCU      85
      TPKW=XMPKW+PURNEW                                                 CALCU      86
444   CONTINUE                                                          CALCU      87
C     $$$ THIS IS MODEL B - CONFIGS 3 4 + 5                             CALCU      88
      Q8T=0.                                                            CALCU      89
C                                                                       CALCU      90
      DO 44 I=1,4                                                       CALCU      91
      ETHLOAD=TSHP*(100./XNPT)                                          CALCU      92
      CALL TLU(ETHLOAD,CEFAC,PWRE,CFE,NCFE)                             CALCU      93
      Q33=TSHP*ACCPWR*((1-ETH)/ETH)                                     CALCU      94
      Q5=Q9+Q33+Q34                                                     CALCU      95
      Q11=(TSHP*2545./(ETAB*ETH))+(Q9/ETAB)                             CALCU      96
      Q8=Q5-Q7                                                          CALCU      97
      IF(Q8.GT.0.) Q8T=Q8                                               CALCU      98
      CALL ETHSUB                                                       CALCU      99
      CALL TLU(T33,AETH,VTIETH,VETH,NETH)                               CALCU     100
   44 ETH=AETH*CEFAC                                                    CALCU     101
C                                                                       CALCU     102
      IF(MDIAG.EQ.50) WRITE(OUT,50)TSHP,SUME(1),C1,C2,ETH,Q11,Q9        CALCU     103
      IF(MDIAG.EQ.50) WRITE(OUT,51) Q12,Q13,Q14,Q15,Q33,Q34,Q8,Q5       CALCU     104
      RETURN                                                            CALCU     105
   10 WRITE(OUT,15) K                                                   CALCU     106
   50 FORMAT(1X,5HTSHP=,E10.3,5HSUME=,E10.3,3HC1=,E10.3,3HC2=,E10.3,    CALCU     107
     1   4HETH=,E10.3,4HQ11=,E10.3,4H Q9=,E10.3)                        CALCU     108
   51 FORMAT(1X,4HQ12=,E10.3,4HQ13=,E10.3,4HQ14=,F10.3,4HQ15=,E10.3     CALCU     109
     1   ,4HQ33=,F10.3,4HQ34=,F10.3,5H Q8= ,E10.3,4H Q5=,E10.3)         CALCU     110
15    FORMAT(1X,"LIMIT REACHED",2X,I3)                                  CALCU     111
      STOP                                                              CALCU     112
      END                                                               CALCU     113
      SUBROUTINE ETHSUB                                                 ETHSUB      2
      COMMON/TGCM/ETACON,ETAMM,ETAGG,FLMC,FLTS,Q16,FLWF,ETA1,ETAG,T14   ETHSUB      3
      COMMON/TVAL/COPC1(10),VTIC1(10),CF1(10),PWR1(10),                 ETHSUB      4
     +            COPC2(10),VTIC2(10),CF2(10),PWR2(10),                 ETHSUB      5
     +            VETH(10),VTIETH(10),CFE(10),PWRE(10)                  ETHSUB      6
      COMMON/CONTR/NSTAPT,NCASES,NCOPC1,ICOPC1,TITLE(50),               ETHSUB      7
     +             NCOPC2,ICOPC2,NETH,IETH,NEXT,NCF1,                   ETHSUB      8
     +             NCF2,NCFE                                            ETHSUB      9
      COMMON/SVALGL/XNP,ETAGEN,ETAM,ETAB,TV,MDIAG,PCT,                  ETHSUB     10
     +              DTAIR,SCEMOL,SCEMVL,E7,IE(7),SV(10),                ETHSUB     11
     +              SQB(10),SCEMV,EPSV                                  ETHSUB     12
      COMMON/ELEC/SEVEN,LOADEDT,XMSHP,TPKW,XNMGLD,EXPKW,                ETHSUB     13
     +            GENLD,XMPKW,PURNEW,GENNEW                             ETHSUB     14
      COMMON/CALC/K,Q14,Q1,Q12,Q13,Q15,Q34,X,TSHP,Q33,Q9,               ETHSUB     15
     +            Q5,Q11,Q8,C1,C2,ETH,Q7,ACCPWR,AINPWR,                 ETHSUB     16
     +            ECPWR,T1,SCEMEC,ECMAX,Q24,Q8T,Q8TM,Q12M,              ETHSUB     17
     +            Q14M,Q5M,NSPM                                         ETHSUB     18
      COMMON/SU/E1CON1,E2CON1,NP,E2CON2,E2CON3,E3CON1,E3CON3,           ETHSUB     19
     +          E4CON1,ESCON1,ESCON2,E6CON1,SCEMOUT,E(7)                ETHSUB     20
      COMMON/COREAC/C1EAC,C2EAC,CEEAC,DAYNO,HOURNO,FLAG                 ETHSUB     21
      COMMON/IODEV/IN,OUT                                               ETHSUB     22
```

```
      COMMON/S2LOAD/XNPC1,XNPC2,XNPT,AC1,AC2,AFTH,NDUAL,                ETHSUB    23
     +                NREV,XNPBS,XNPBL,XNPBH,XKOA,XNPB,                 ETHSUB    24
     +                XNPNB,BLOAD,XNBLD,GCF,ECF,DRATE                   ETHSUB    25
      COMMON/SCALC/T33,T34,T0,U73,U74,U83,U84,A73,A74,A83,A84,          ETHSUB    26
     +              G7,G8,TWB,DT,T71,T73,T81,T72,T82,T83,DT82T81        ETHSUB    27
      COMMON/S2CALC/KFLAG,X30LD,X3,DOTOLD,DOTM,R,NR,ETAD                ETHSUB    28
      COMMON/S3CALC/G1,A14,U14,T12,H34AD                                ETHSUB    29
      INTEGER DAYNO,HOURNO,OUT                                          ETHSUB    30
      REAL K1,K2                                                        ETHSUB    31
      K1=60.*8.33*G8                                                    ETHSUB    32
      K2=60.*8.33*G7                                                    ETHSUB    33
      IF(Q7.GT.0) T71=T0-(Q7/K2)                                        ETHSUB    34
      IF(Q7.GT.(Q33+Q34)) T73=T71+(Q33+Q34)/K2                          ETHSUB    35
      IF(Q7.LT.(Q33+Q34)) T73=T0                                        ETHSUB    36
      CI=1/(1-EXP(-(U74*A74)/K2))                                       ETHSUB    37
      CZ=1/(1-EXP(-(U84*A84)/K1))                                       ETHSUB    38
      C3=1/(1-EXP(-(U73*A73)/K2))                                       ETHSUB    39
      C4=1/(1-EXP(-(U83*A83)/K1))                                       ETHSUB    40
      IF(Q7.GT.(0.).AND.Q8T.GT.(0.).AND.Q34.LT.(1.)) GO TO 50           ETHSUB    41
      IF(Q7.GT.(0.).AND.Q8T.GT.(0.).AND.Q34.GT.(0.)) GO TO 100          ETHSUB    42
      IF(Q8T.EQ.(0.).AND.Q7.GT.(0.).AND.Q34.GE.(0.)) GO TO 200          ETHSUB    43
      IF(Q7.EQ.(0.).AND.Q34.GE.(0.).AND.Q8T.GT.(0.)) GO TO 300          ETHSUB    44
50    T72=T34=T71                                                       ETHSUB    45
      T33=T72+C3*(Q7/K2)                                                ETHSUB    46
      T82=T33-C4*(Q8T/K2)                                               ETHSUB    47
      T83=(T33-T82)/C4+T82                                              ETHSUB    48
      T81=T82                                                           ETHSUB    49
      GO TO 400                                                         ETHSUB    50
100   CONTINUE                                                          ETHSUB    51
      H=(CI-1)*T71                                                      ETHSUB    52
      B=(C4/K1)*Q8T-C3*T73                                              ETHSUB    53
      C=Q33-Q8T-K2*T73                                                  ETHSUB    54
      T72=((H*C4*K1)-(B*C7*K1)+C*(C4-1)*(C7-1)-                         ETHSUB    55
     +H*K1*(C4-1)+(C7-1)*B*K1-C7*C4*C)/                                 ETHSUB    56
     +((CI*C4*K1)-(C7-1)*(C4-1)*K2+K1*C7*(C3-1)-                        ETHSUB    57
     +CI*K1*(C4-1)-(C7-1)*(C3-1)*K1+C7*C4*K2)                           ETHSUB    58
      T34=T71+CI*(T72-T71)                                              ETHSUB    59
      DT82T81=(Q34-K2*(T72-T71))/K1                                     ETHSUB    60
      T81=T34-CZ*DT82T81                                                ETHSUB    61
      T82=T81+DT82T81                                                   ETHSUB    62
      T83=(Q33-K2*(T73-T72))/K1+T82                                     ETHSUB    63
      T33=T82+C4*(T83-T82)                                              ETHSUB    64
      CT33=T72+C3*(T73-T72)                                             ETHSUB    65
      GO TO 400                                                         ETHSUB    66
  200 T34=T71+CI*(Q34/K2)                                               ETHSUB    67
      T33=T71+(Q34/K2)+C3*(Q33/K2)                                      ETHSUB    68
      T72=T71+(Q34/K2)                                                  ETHSUB    69
      GO TO 400                                                         ETHSUB    70
300   T81=AMAX1((TWB+DT),65.)                                           ETHSUB    71
      T34=T81+C7*(Q34/K1)                                               ETHSUB    72
      T33=T81+(Q34/K1)+C4*(Q33/K1)                                      ETHSUB    73
      T82=T81+(Q34/K1)                                                  ETHSUB    74
      T83=T81+(Q33+Q34)/K1                                              ETHSUB    75
  400 CONTINUE                                                          ETHSUB    76
      IF(MDIAG.NE.80) RETURN                                            ETHSUB    77
      WRITE(OUT,1000) Q7,Q8T,Q33,Q34                                    ETHSUB    78
      WRITE(OUT,1001) U74,A74,U84,A84                                   ETHSUB    79
      WRITE(OUT,1002) U73,A73,U83,A83                                   ETHSUB    80
      WRITE(OUT,1003) T0,TWB,DT,G7,G8                                   ETHSUB    81
      WRITE(OUT,1004) T71,T73,K1,K2                                     ETHSUB    82
      WRITE(OUT,1005) CI,CZ,C3,C4                                       ETHSUB    83
      WRITE(OUT,1006) H,B,C,T72                                         ETHSUB    84
      WRITE(OUT,1007) DT82T81,T81,T82,T83                               ETHSUB    85
```

```
      WRITE(OUT,1008) T33,T34,CT33                                      ETHSUB     86
      RETURN                                                            ETHSUB     87
1000  FORMAT("0Q7= ",F15.5,3X,"Q8T= ",F15.5,3X,"Q33= ",F15.5,3X,       ETHSUB     88
     +       "Q34= ",F15.5)                                             ETHSUB     89
1001  FORMAT("0U74= ",F15.5,3X,"A74= ",F15.5,3X,"U84= ",F15.5,         ETHSUB     90
     +       3X,"A84= ",F15.5)                                          ETHSUB     91
1002  FORMAT("0U73= ",F15.5,3X,"A73= ",F15.5,3X,"U83= ",F15.5,3X,      ETHSUB     92
     +       "A83= ",F15.5)                                             ETHSUB     93
1003  FORMAT("0T0= ",F15.5,3X,"TWB= ",F15.5,3X,"DT= ",F15.5,3X,        ETHSUB     94
     +       "G7= ",F15.5,3X,"G8= ",F15.5)                              ETHSUB     95
1004  FORMAT("0T71= ",F15.5,3X,"T73= ",F15.5,3X,"K1= ",F15.5,3X,       ETHSUB     96
     +       "K2= ",F15.5)                                              ETHSUB     97
1005  FORMAT("0C1= ",F15.5,3X,"C2= ",F15.5,3X,"C3= ",F15.5,3X,         ETHSUB     98
     +       "C4= ",F15.5)                                              ETHSUB     99
1006  FORMAT("0A= ",F15.5,3X,"B= ",F15.5,3X,"C= ",F15.5,3X,"T72=",F15.5) ETHSUB    100
1007  FORMAT("0DT82T81= ",F15.5,3X,"T81= ",F15.5,3X,"T82= ",F15.5,3X,  ETHSUB    101
     +       "T83= ",F15.5)                                             ETHSUB    102
1008  FORMAT("0T33= ",F15.5,3X,"T34= ",F15.5,3X,"CT33= ",F15.5)        ETHSUB    103
      END                                                               ETHSUB    104
      SUBROUTINE COPSUB                                                 COPSUB      2
      REAL K3                                                           COPSUB      3
      DIMENSION EFF11(6),EFF12(7),EFF22(7),X11(6),X12(7),X22(7)         COPSUB      4
      COMMON/TGCM/ETACON,ETAMM,ETAGG,FLMC,FLTS,Q16,FLWF,ETA1,ETAG,T14   COPSUB      5
      COMMON/TVAL/COPC1(10),VTIC1(10),CF1(10),PWR1(10),                 COPSUB      6
     +            COPC2(10),VTIC2(10),CF2(10),PWR2(10),                 COPSUB      7
     +            VFTH(10),VTIETH(10),CFE(10),PWRF(10)                  COPSUB      8
      COMMON/CONTR/NSTART,NCASES,NCOPC1,ICOPC1,TITLE(50),               COPSUB      9
     +             NCOPC2,ICOPC2,NETH,IFTH,NEXT,NCF1,                   COPSUB     10
     +             NCF2,NCFE                                            COPSUB     11
      COMMON/SVALGL/XNP,ETAGEN,ETAM,ETAB,TV,MDIAG,PCT,                  COPSUB     12
     +              DTATR,SCFMOL,SCFMVL,F7,IF(7),SV(10),                COPSUB     13
     +              SQB(10),SCFMV,EPSV                                  COPSUB     14
      COMMON/ELEC/SEVEN,LOADEDT,XMSHP,TPKW,XNMGLD,EXPKW,                COPSUB     15
     +            GENLD,XMPKW,PURNEW,GENNEW                             COPSUB     16
      COMMON/CALC/K,Q14,Q1,Q12,Q13,Q15,Q34,X,TSHP,Q33,Q9,               COPSUB     17
     +            Q5,Q11,Q8,C1,C2,FTH,Q7,ACCPWR,AINPWR,                 COPSUB     18
     +            FCPWR,T1,SCFMEC,ECMAX,Q24,Q8T,Q8TM,Q12M,              COPSUB     19
     +            Q14M,Q5M,NSPM                                         COPSUB     20
      COMMON/SU/E1CON1,E2CON1,NP,E2CON2,E2CON3,E3CON1,E3CON3,           COPSUB     21
     +          E4CON1,E5CON1,E5CON2,E6CON1,SCFMOUT,E(7)                COPSUB     22
      COMMON/CORFAC/C1FAC,C2FAC,CFFAC,DAYNO,HOURNO,FLAG                 COPSUB     23
      COMMON/IODEV/IN,OUT                                               COPSUB     24
      COMMON/XNLOAD/XNPC1,XNPC2,XNPT,AC1,AC2,AFTH,NDUAL,                COPSUB     25
     +              NREV,XNPBS,XNPBL,XNPBH,XKOA,XNPB,                   COPSUB     26
     +              XNPNB,BLOAD,XNBLD,GCF,ECF,DRATE                     COPSUB     27
      COMMON/SCALC/T33,T34,T0,U73,U74,U83,U84,A73,A74,A83,A84,          COPSUB     28
     +             G7,G8,TWB,DT,T71,T73,T81,T72,T82,T83,DT82T81         COPSUB     29
      COMMON/S2CALC/KFLAG,X3OLD,X3,DOTOLD,DOTM,R,NR,ETAD                COPSUB     30
      COMMON/S3CALC/G1,A14,U14,T12,H34AD                                COPSUB     31
      INTEGER DAYNO,HOURNO,OUT                                          COPSUB     32
      DATA EFF11/.578,.663,.722,.762,.754,.782/                         COPSUB     33
      DATA X11/11.0,14.9,21.5,23.8,25.7,26.9/                           COPSUB     34
      DATA EFF12/.508,.579,.66,.732,.76,.78,.793/                       COPSUB     35
      DATA X12/1.2,1.97,2.75,3.62,4.12,4.58,4.7/                        COPSUB     36
      DATA EFF22/.533,.580,.657,.739,.770,.778,.791/                    COPSUB     37
      DATA X22/.55,.87,1.15,1.67,1.87,2.01,2.12/                        COPSUB     38
      DATA N11,N12,N22/6,7,7/                                           COPSUB     39
      KFLAG=0                                                           COPSUB     40
      X3OLD=DOTOLD=0.                                                   COPSUB     41
      K3=500.*G1                                                        COPSUB     42
      C5=(1/(1-EXP(-U14*A14/K3)))                                       COPSUB     43
      T14=T12-(Q14*(C5-1))/K3                                           COPSUB     44
      P34SAT=PSATT(T34)                                                 COPSUB     45
```

```
      P14SAT=PSATT(T14)                                                 COPSUB    46
      HL34=HFT(T34)                                                     COPSUB    47
      HG14=HGT(T14)                                                     COPSUB    48
      Q34N=((C2+1)/C2)*Q14                                              COPSUB    49
100   Q34O=Q34N                                                         COPSUB    50
      DOTM=Q14/(HG14-HL34)                                              COPSUB    51
      X3=DOTM*SQRT(T14+460.)/(P14SAT*3600.)                             COPSUB    52
      R=P34SAT/P14SAT                                                   COPSUB    53
      IF(NR.EQ.11) Z=(X3*7./75.)+2.256                                  COPSUB    54
      IF(NR.EQ.12) Z=(X3*.3/1.)+2.11                                    COPSUB    55
      IF(NR.EQ.22) Z=(X3*5./8.)+2.155                                   COPSUB    56
      IF(R.LT.Z) GO TO 200                                              COPSUB    57
      X3OLD=X3                                                          COPSUB    58
      DOTOLD=DOTM                                                       COPSUB    59
      IF(NR.EQ.11) X3=(R-2.256)/(7./75.)                                COPSUB    60
      IF(NR.EQ.12) X3=(R-2.11)/(.3/1.)                                  COPSUB    61
      IF(NR.EQ.22) X3=(R-2.155)/(5./8.)                                 COPSUB    62
      DOTM=X3*P14SAT*3600./SQRT(T14+460.)                               COPSUB    63
      KFLAG=1                                                           COPSUB    64
200   CONTINUE                                                          COPSUB    65
      IF(NR.EQ.11) CALL TLU(X3,ETAD,X11,EFF11,N11)                      COPSUB    66
      IF(NR.EQ.12) CALL TLU(X3,ETAD,X12,EFF12,N12)                      COPSUB    67
      IF(NR.EQ.22) CALL TLU(X3,ETAD,X22,EFF22,N22)                      COPSUB    68
      IF(NR.EQ.11) RM=16.86                                             COPSUB    69
      IF(NR.EQ.12) RM=17.48                                             COPSUB    70
      IF(NR.EQ.22) RM=24.6                                              COPSUB    71
      H34AD=HG14+RM*ALOG10(P34SAT/P14SAT)                               COPSUB    72
      H34ACT=HG14+(H34AD-HG14)/ETAD                                     COPSUB    73
      AC2=(HG14-HL34)/(H34ACT-HG14)                                     COPSUB    74
      Q34N=DOTM*(H34ACT-HL34)                                           COPSUB    75
      IF(ABS(Q34N-Q34O)/Q34O.GT..01) GO TO 100                          COPSUB    76
      Q14=DOTM*(HG14-HL34)                                              COPSUB    77
      C2LOAD=(100.*Q14)/Q14M                                            COPSUB    78
      CALL TLU(C2LOAD,C2FAC,PWR2,CF2,NCF2)                              COPSUB    79
      C2=AC2*C2FAC                                                      COPSUB    80
      IF(MDIAG.NE.30) RETURN                                            COPSUB    81
      WRITE(OUT,300) X3OLD,DOTOLD,K3,C5,T14,P34SAT,P14SAT,              COPSUB    82
     +       HL34,HG14,DOTM,X3,R,KFLAG,ETAD,RM,H34AD,H34ACT,C2          COPSUB    83
      RETURN                                                            COPSUB    84
300   FORMAT(1H1,"X3OLD=",F10.2,"DOTOLD=",F10.2,"K3=",F10.2,            COPSUB    85
     +     "C5=",F10.2,"T14=",F10.2,"P34SAT=",F10.2,/,                  COPSUB    86
     +      " P14SAT=",F10.2,"HL34=",F10.2,"HG14=",F10.2,               COPSUB    87
     +      "DOTM=",F10.2,"X3=",F10.2,"R=",F10.2,"KFLAG=",I10,          COPSUB    88
     +            /," ETAD=",F10.2,"RM=",F10.2,"H34AD=",                COPSUB    89
     +      F10.2,"H34ACT=",F10.2,"C2=",F10.2)                          COPSUB    90
      END                                                               COPSUB    91
      FUNCTION PSATT(TF)                                                PSATT      2
      REAL K                                                            PSATT      3
C                                                                       PSATT      4
      COMMON/FPL01/ AD,BD,CD,DD,ED,AVP,BVP,CVP,DVP,EVP,FVP,             PSATT      5
     1              R,B1,A2,B2,C2,A3,B3,C3,A4,B4,C4,                    PSATT      6
     2              A5,B5,C5,A6,B6,C6,K,ALPHA,CPR,                      PSATT      7
     3              ACV,BCV,CCV,DCV,ECV,XX,YY                           PSATT      8
C                                                                       PSATT      9
C                                                                       PSATT     10
      REAL LE10,J                                                       PSATT     11
C                                                                       PSATT     12
      COMMON /FPL02/ LE10,J,TREF,TOL,NR,PC,TC,VC,TEMIN,TFR              PSATT     13
C                                                                       PSATT     14
C                                                                       PSATT     15
C     SATURATION PRESSURE AS A FUNCTION OF TEMPERATURE IN DEG. F.       PSATT     16
C                                                                       PSATT     17
      T=TF+TFR                                                          PSATT     18
```

```
      IF (TF.LT.TEMIN.OR.T.GT.TC) GO TO 40                              PSATT
   20 PSATT=EXP ((AVP+BVP/T+CVP*ALOG10(T)+DVP*T)*LE10)                  PSATT
      RETURN                                                            PSATT
   40 CALL FPLMSG(6HPSATT ,1,2,TF,0,0)                                  PSATT
      RETURN                                                            PSATT
      END                                                               PSATT
      FUNCTION DPVDTT(TF)                                               DPVDTT
C                                                                       DPVDTT
C     ENTRY DPDTPT(P,TF)                                                DPVDTT
C                                                                       DPVDTT
C     COMPUTES TOTAL DERIVATIVE (DPV/DT) OF SATURATION PRESSURE AS A    DPVDTT
C     FUNCTION OF SATURATION TEMPERATURE (DEG.F).                       DPVDTT
C     OR DERIVATIVE AND SATURATION PRESSURE AS A FUNCTION OF SAT. TEMP. DPVDTT
C     (IF ENTRY POINT IS USED.)                                         DPVDTT
C                                                                       DPVDTT
      REAL K                                                            DPVDTT
C                                                                       DPVDTT
      COMMON/FPL01/ AD,BD,CD,DD,ED,AVP,BVP,CVP,DVP,EVP,FVP,             DPVDTT
     1              R,B1,A2,B2,C2,A3,B3,C3,A4,B4,C4,                    DPVDTT
     2              A5,B5,C5,A6,B6,C6,K,ALPHA,CPR,                      DPVDTT
     3              ACV,BCV,CCV,DCV,ECV,XX,YY                           DPVDTT
C                                                                       DPVDTT
C                                                                       DPVDTT
      REAL LE10,J                                                       DPVDTT
C                                                                       DPVDTT
      COMMON /FPL02/ LE10,J,IREF,TOL,NR,PC,TC,VC,TEMIN,TFR              DPVDTT
C                                                                       DPVDTT
      T=TF+TFR                                                          DPVDTT
      IF (TF.LT.TEMIN.OR.T.GT.TC) GO TO 90                              DPVDTT
      P=PSATT(TF)                                                       DPVDTT
   70 DPVDTT=P*((-BVP/T*LE10+CVP)/T+DVP*LE10)                           DPVDTT
      RETURN                                                            DPVDTT
   90 CALL FPLMSG(6HDPVDTT,1,2,TF,0,0)                                  DPVDTT
      RETURN                                                            DPVDTT
      END                                                               DPVDTT
      FUNCTION HFT(TSAT)                                                HFT
C                                                                       HFT
C     ENTRY HPVVHT(HG,PSAT,VF,VG,HFG,TSAT)                              HFT
C                                                                       HFT
C     ENTHALPY OF SATURATED LIQUID AS A FUNCTION OF TSAT.               HFT
C     OR HF, HG, PSAT, VF, VG, AND HFG AS A FUNCTION OF TSAT.           HFT
C                                                                       HFT
C                                                                       HFT
      REAL LE10,J                                                       HFT
C                                                                       HFT
      COMMON /FPL02/ LE10,J,IREF,TOL,NR,PC,TC,VC,TEMIN,TFR              HFT
C                                                                       HFT
      DPDT=DPVDTT(TSAT)                                                 HFT
      PSAT=PSATT(TSAT)                                                  HFT
      T=TSAT+TFR                                                        HFT
      VG=VPTD(PSAT,TSAT)                                                HFT
      VF=VFT(TSAT)                                                      HFT
      HFG=J*DPDT*T*(VG-VF)                                              HFT
      HG=HTVD(TSAT,VG)                                                  HFT
      HFT=HG-HFG                                                        HFT
      RETURN                                                            HFT
      END                                                               HFT
      FUNCTION HGT(TSAT)                                                HGT
C                                                                       HGT
C     ENTRY HGPVGT(PSAT,VG,TSAT)                                        HGT
C                                                                       HGT
C     ENTHALPY OF SATURATED VAPOR AS A FUNCTION OF SATURATION TEMP. (F). HGT
C     OR HG, PSAT, AND VG AS A FUNCTION OF SATURATION TEMP.             HGT
```

```
C                                                                       HGT      8
      PSAT=PSATT(TSAT)                                                  HGT      9
      VG=VPTD(PSAT,TSAT)                                                HGT     10
      HGT=HTVD(TSAT,VG)                                                 HGT     11
      RETURN                                                            HGT     12
      END                                                               HGT     13
      FUNCTION VFT(TF)                                                  VFT      2
C                                                                       VFT      3
C     SPECIFIC VOLUME OF LIQUID AS A FUNCTION OF SATURATION TEMPERATURE VFT      4
C     IN DEGREES FAHRENHEIT.                                            VFT      5
C                                                                       VFT      6
      REAL K                                                            VFT      7
C                                                                       VFT      8
      COMMON/FPL01/ AD,BD,CD,DD,ED,AVP,BVP,CVP,DVP,EVP,FVP,             VFT      9
     1              R,B1,A2,B2,C2,A3,B3,C3,A4,B4,C4,                    VFT     10
     2              A5,B5,C5,A6,B6,C6,K,ALPHA,CPR,                      VFT     11
     3              ACV,BCV,CCV,DCV,ECV,XX,YY                           VFT     12
C                                                                       VFT     13
C                                                                       VFT     14
      REAL LE10,J                                                       VFT     15
C                                                                       VFT     16
      COMMON /FPL02/ LE10,J,IREF,TOL,NR,PC,TC,VC,TFMIN,TFR              VFT     17
C                                                                       VFT     18
      DATA EX /0.333333333333E+00 /                                     VFT     19
C                                                                       VFT     20
      T=TF+TFR                                                          VFT     21
      IF (TF.LT.TFMIN.OR.T.GT.TC) GO TO 40                              VFT     22
C                                                                       VFT     23
   20 X=TC-T                                                            VFT     24
      RHOF=AD+X*(BD+ED*X)+CD*SQRT(X)+DD*X**EX                           VFT     25
      VFT=1./RHOF                                                       VFT     26
      RETURN                                                            VFT     27
   40 CALL FPLMSG(6HVFT    ,1,2,TF,0,0)                                 VFT     28
      RETURN                                                            VFT     29
      END                                                               VFT     30
      FUNCTION PTVD(TF,V)                                               PTVD     2
C                                                                       PTVD     3
C     PRESSURE AS A FUNCTION OF TEMP. (DEG.F) AND SPEC. VOL (FT**3/LBM). PTVD    4
C                                                                       PTVD     5
      REAL K                                                            PTVD     6
C                                                                       PTVD     7
      COMMON/FPL01/ AD,BD,CD,DD,ED,AVP,BVP,CVP,DVP,EVP,FVP,             PTVD     8
     1              R,B1,A2,B2,C2,A3,B3,C3,A4,B4,C4,                    PTVD     9
     2              A5,B5,C5,A6,B6,C6,K,ALPHA,CPR,                      PTVD    10
     3              ACV,BCV,CCV,DCV,ECV,XX,YY                           PTVD    11
C                                                                       PTVD    12
C                                                                       PTVD    13
      REAL LE10,J                                                       PTVD    14
C                                                                       PTVD    15
      COMMON /FPL02/ LE10,J,IREF,TOL,NR,PC,TC,VC,TFMIN,TFR              PTVD    16
C                                                                       PTVD    17
      T=TF+TFR                                                          PTVD    18
      IF (TF.LT.TFMIN.OR.V.LT.VC/1.5) GO TO 10                          PTVD    19
      VB=1./(V-B1)                                                      PTVD    20
      X=ALPHA*V                                                         PTVD    21
      IF (X.GT.70.) X=70.                                               PTVD    22
      X=EXP(X)                                                          PTVD    23
      X1=EXP(-K*T/TC)                                                   PTVD    24
      PTVD=VB*(R*T+VB*(A2+B2*T+C2*X1+VB*(A3+B3*T+C3*X1+VB*(A4+B4*T+C4*X1 PTVD    25
     1     +VB*(A5+B5*T+C5*X1)))))+(A6+B6*T+C6*X1)/X/(1.+CPR*X)          PTVD    26
      RETURN                                                            PTVD    27
   10 CALL FPLMSG(6HPTVD   ,1,2,TF,3,V)                                 PTVD    28
      RETURN                                                            PTVD    29
```

```
      END                                                               PTVD        3
      FUNCTION DPDVTV(TF,V)                                             DPDVTV      2
C                                                                       DPDVTV      3
C     COMPUTES PARTIAL DERIVATIVE (DP/DV)T AS A FUNCTION OF TEMP (DEG.F) DPDVTV     4
C     AND SPECIFIC VOLUME (FT**3/LBM).                                  DPDVTV      5
      REAL K                                                            DPDVTV      6
C                                                                       DPDVTV      7
      COMMON/FPL01/ AD,BD,CD,DD,ED,AVP,BVP,CVP,DVP,EVP,FVP,             DPDVTV      8
     1              R,B1,A2,B2,C2,A3,B3,C3,A4,B4,C4,                    DPDVTV      9
     2              A5,B5,C5,A6,B6,C6,K,ALPHA,CPR,                      DPDVTV     10
     3              ACV,BCV,CCV,DCV,ECV,XX,YY                           DPDVTV     11
C                                                                       DPDVTV     12
C                                                                       DPDVTV     13
      REAL LE10,J                                                       DPDVTV     14
C                                                                       DPDVTV     15
      COMMON /FPL02/ LE10,J,IREF,TOL,NR,PC,TC,VC,TFMIN,TFR              DPDVTV     16
C                                                                       DPDVTV     17
      IF (TF.LT.TFMIN.OR.V.LT.VC/1.5) GO TO 10                          DPDVTV     18
      T=TF+TFR                                                          DPDVTV     19
      X=ALPHA*V                                                         DPDVTV     20
      IF (X.GT.70.) X=70.                                               DPDVTV     21
      X=EXP(X)                                                          DPDVTV     22
      Y=1.+CPR*X                                                        DPDVTV     23
      X1=EXP(-K*T/TC)                                                   DPDVTV     24
      VB=1./(V-B1)                                                      DPDVTV     25
      DPDVTV=-VB*VB*(R*T+VB*(2.*(A2+B2*T+C2*X1)+VB*(3.*(A3+B3*T+C3*X1)  DPDVTV     26
     1     +VB*(4.*(A4+B4*T+C4*X1)+VB*(5.*(A5+B5*T+C5*X1))))))         DPDVTV     27
     2     -(A6+B6*T+C6*X1)*ALPHA*(1.+2.*CPR*X)/Y/Y/X                   DPDVTV     28
      RETURN                                                            DPDVTV     29
   10 CALL FPLMSG(6HDPDVTV,1,2,TF,3,V)                                  DPDVTV     30
      RETURN                                                            DPDVTV     31
      END                                                               DPDVTV     32
      FUNCTION VPTD(P,TF)                                               VPTD        2
C                                                                       VPTD        3
C     SPECIFIC VOLUME OF VAPOR AS A FUNCTION OF PRESSURE (PSIA) AND TEMP VPTD       4
C     (DEG.F).                                                          VPTD        5
C                                                                       VPTD        6
C     THIS IS AN ITERATIVE (SECOND LEVEL), (LEVEL 2.0) ROUTINE.         VPTD        7
      REAL K                                                            VPTD        8
C                                                                       VPTD        9
      COMMON/FPL01/ AD,BD,CD,DD,ED,AVP,BVP,CVP,DVP,EVP,FVP,             VPTD       10
     1              R,B1,A2,B2,C2,A3,B3,C3,A4,B4,C4,                    VPTD       11
     2              A5,B5,C5,A6,B6,C6,K,ALPHA,CPR,                      VPTD       12
     3              ACV,BCV,CCV,DCV,ECV,XX,YY                           VPTD       13
C                                                                       VPTD       14
C                                                                       VPTD       15
      REAL LE10,J                                                       VPTD       16
C                                                                       VPTD       17
      COMMON /FPL02/ LE10,J,IREF,TOL,NR,PC,TC,VC,TFMIN,TFR              VPTD       18
C                                                                       VPTD       19
      IF (TF.LT.TFMIN) GO TO 60                                         VPTD       20
      T=TF+TFR                                                          VPTD       21
C                                                                       VPTD       22
C     ATTEMPTS TO                                                       VPTD       23
C     ESTIMATE V FROM THE FIRST TWO TERMS IN EQN. OF STATE.             VPTD       24
C     RESULT IN SQRT(NEGATIVE NO.) AT HIGH PRESSURES.                   VPTD       25
C  10 A=A2+B2*T+C2*EXP(-K*T/TC)                                         VPTD       26
C     B=R*T                                                             VPTD       27
C     X=(-B+SQRT(B*B+4.*A*P))/2./A                                      VPTD       28
C     VPTD=1./X+B1                                                      VPTD       29
C                                                                       VPTD       30
C     ESTIMATE V FROM THE FIRST TERM IN EQN. OF STATE.                  VPTD       31
   10 VPTD=R*T/P+B1                                                     VPTD       32
```

```
      RHO=1./VPTD                                                       VPTD      33
C                                                                       VPTD      34
C     ENTRY VPTDE(P,TF)                                                 VPTD      35
      ENTRY VPTDE                                                       VPTD      36
C                                                                       VPTD      37
C     THIS ENTRY POINT IS USED TO SHORTEN THE ITERATION WHEN A PREVIOUS VPTD      38
C     ITERATION HAS ALREADY ESTABLISHED A GOOD VALUE FOR VPTD.          VPTD      39
C                                                                       VPTD      40
      DO 20 ITER=1,20                                                   VPTD      41
C     CALCULATE THE VALUE OF P CORRESPONDING TO T AND V. USE THE NEWTON- VPTD     42
C     RAPHESON METHOD TO CORRECT THE DENSITY.                           VPTD      43
      F=PTVD(TF,VPTD)-P                                                 VPTD      44
      FPRIME=-DPDVTV(TF,VPTD)/(RHO*RHO)                                 VPTD      45
C     CORRECTION IS MADE TO DENSITY RATHER THAN TO SPECIFIC VOLUME      VPTD      46
C     BECAUSE, FOR A PERFECT GAS, P=RHO*R*T, AND CONVERGENCE SHOULD BE  VPTD      47
C     IMPROVED.                                                         VPTD      48
      RHO=RHO-F/FPRIME                                                  VPTD      49
      VPTD=1./RHO                                                       VPTD      50
C     THE FOLLOWING STATEMENT IS PLACED LAST IN THE DO LOOP SO THAT     VPTD      51
C     EVERY ENTRY TO VPTDE WILL RESULT IN AN IMPROVED ESTIMATE OF VPTD, VPTD      52
C     REGARDLESS OF THE VALUE OF TOL.                                   VPTD      53
   20 IF (ABS(F/P).LT.TOL) RETURN                                       VPTD      54
C     NON-CONVERGED SOLUTION.                                           VPTD      55
   40 CALL FPLMSG(6HVPTD  ,2,1,P,2,TF)                                  VPTD      56
      RETURN                                                            VPTD      57
   60 CALL FPLMSG(6HVPTD  ,1,1,P,2,TF)                                  VPTD      58
      RETURN                                                            VPTD      59
      END                                                               VPTD      60
      FUNCTION HTVD(TF,V)                                               HTVD       2
C                                                                       HTVD       3
C     ENTRY HPTVD(P,TF,V)                                               HTVD       4
C                                                                       HTVD       5
C     ENTHALPY OF SUPERHEATED VAPOR AS A FUNCTION OF TEMP (DEG.F) AND   HTVD       6
C     SPECIFIC VOLUME. (FT**3/LBM).                                     HTVD       7
C     OR H AND P AS A FUNCTION OF T AND V.                              HTVD       8
C                                                                       HTVD       9
      REAL K                                                            HTVD      10
C                                                                       HTVD      11
      COMMON/FPL01/ AD,BD,CD,DD,ED,AVP,BVP,CVP,DVP,EVP,FVP,             HTVD      12
     1              R,B1,A2,B2,C2,A3,B3,C3,A4,B4,C4,                    HTVD      13
     2              A5,B5,C5,A6,B6,C6,K,ALPHA,CPR,                      HTVD      14
     3              ACV,BCV,CCV,DCV,ECV,XX,YY                           HTVD      15
C                                                                       HTVD      16
C                                                                       HTVD      17
      REAL LE10,J                                                       HTVD      18
C                                                                       HTVD      19
      COMMON /FPL02/ LE10,J,IREF,TOL,NR,PC,TC,VC,TEMIN,TFR              HTVD      20
C                                                                       HTVD      21
      IF (TF.LT.TEMIN.OR.V.LT.VC/1.5) GO TO 10                          HTVD      22
      T=TF+TFR                                                          HTVD      23
      X1=K*T/TC                                                         HTVD      24
      X1=(1.+X1)*EXP(-X1)                                               HTVD      25
      VB=1./(V-B1)                                                      HTVD      26
      P=PTVD(TF,V)                                                      HTVD      27
      CF1=X1*C2+A2                                                      HTVD      28
      CF2=(X1*C3+A3)/2.                                                 HTVD      29
      CF3=(X1*C4+A4)/3.                                                 HTVD      30
      CF4=(X1*C5+A5)/4.                                                 HTVD      31
      IF (ALPHA.EQ.0.) GO TO 5                                          HTVD      32
      CF6=(X1*C6+A6)/ALPHA                                              HTVD      33
      X=ALPHA*V                                                         HTVD      34
      IF (X.GT.70.) X=70.                                               HTVD      35
      X=EXP(-X)                                                         HTVD      36
```

```
      Y=0.                                                              HTVD
      IF (CPR.NE.0.) Y=CPR*ALOG(1.+X/CPR)                               HTVD
      HTVD=T*(ACV+T*(BCV/2.+T*(CCV/3.+T*DCV/4.)))-FCV/T+J*(P*V+VB*(CF1  HTVD
     1     +VB*(CF2+VB*(CF3+VB*CF4)))+CF6*(X-Y))+XX                     HTVD
      RETURN                                                            HTVD
    5 HTVD=T*(ACV+T*(BCV/2.+T*(CCV/3.+T*DCV/4.)))-FCV/T+J*(P*V+VB*(CF1  HTVD
     1     +VB*(CF2+VB*(CF3+VB*CF4))))+XX                               HTVD
      RETURN                                                            HTVD
   10 CALL FPLMSG(6HHTVD  ,1,2,TF,3,V)                                  HTVD
      RETURN                                                            HTVD
      RETURN                                                            HTVD
      END                                                               HTVD
      SUBROUTINE FPLMSG(FNAME,IERR,P1,V1,P2,V2)                         FPLMSG
C                                                                       FPLMSG
C     ERROR MESSAGE ROUTINE FOR FREON PROPERTIES LIBRARY (FPL)          FPLMSG
C                                                                       FPLMSG
      INTEGER FNAME,P1,P2,PNAME                                         FPLMSG
C                                                                       FPLMSG
      REAL LE10,J                                                       FPLMSG
C                                                                       FPLMSG
      COMMON /FPL02/ LE10,J,IREF,TOL,NR,PC,TC,VC,TFMIN,TFR              FPLMSG
C                                                                       FPLMSG
C                                                                       FPLMSG
      COMMON /FPL05/ IO                                                 FPLMSG
C                                                                       FPLMSG
      DIMENSION PNAME(5)                                                FPLMSG
C                                                                       FPLMSG
      DATA PNAME/6HPRESS=,6HTEMP= ,6HSPVOL=,6HENTH= ,6HENTR= /          FPLMSG
C                                                                       FPLMSG
      DATA IO/6/                                                        FPLMSG
C                                                                       FPLMSG
C      P1,P2 ARE PARAMETER NUMBERS.  V1,V2 ARE VALUES OF THE PARAMETERS. FPLMSG
C        1 = PRESSURE  P                                                FPLMSG
C        2 = TEMPERATURE T                                              FPLMSG
C        3 = SPECIFIC VOLUME V                                          FPLMSG
C        4 = ENTHALPY H                                                 FPLMSG
C        5 = ENTROPY  S                                                 FPLMSG
C        0 = NOT APPLICABLE P2 ONLY)                                    FPLMSG
C                                                                       FPLMSG
      GOTO (10,20,30),IERR                                              FPLMSG
C                                                                       FPLMSG
C     OUT OF RANGE                                                      FPLMSG
C                                                                       FPLMSG
   10 IF (P2.GT.0) GOTO 12                                              FPLMSG
      WRITE(IO,1010) FNAME,NR,PNAME(P1),V1,IREF                         FPLMSG
 1010 FORMAT(/4X,16HOUT OF RANGE IN ,A6,11H FOR FREON ,I3,              FPLMSG
     *       /4X,A6,G15.4,1H,,3X,5HIREF=,I3)                            FPLMSG
      GOTO 9999                                                         FPLMSG
   12 WRITE (IO,1012) FNAME,NR,PNAME(P1),V1,PNAME(P2),V2,IREF           FPLMSG
 1012 FORMAT(/4X,16HOUT OF RANGE IN ,A6,11H FOR FREON ,I3,              FPLMSG
     *       /4X,A6,G15.4,1H,,3X,A6,G15.4,1H,,3X,5HIREF=,I3)            FPLMSG
      GOTO 9999                                                         FPLMSG
C                                                                       FPLMSG
C     NON-CONVERGENT ITERATION                                          FPLMSG
C                                                                       FPLMSG
   20 IF (P2.GT.0) GOTO 22                                              FPLMSG
      WRITE(IO,1020) FNAME,NR,PNAME(P1),V1,IREF                         FPLMSG
 1020 FORMAT(/4X,18HNON-CONVERGENT IN ,A6,11H FOR FREON ,I3,            FPLMSG
     *       /4X,A6,G15.4,1H,,3X,5HIREF=,I3)                            FPLMSG
      GOTO 9999                                                         FPLMSG
   22 WRITE(IO,1022) FNAME,NR,PNAME(P1),V1,PNAME(P2),V2,IREF            FPLMSG
 1022 FORMAT(/4X,18HNON-CONVERGENT IN ,A6,11H FOR FREON ,I3,            FPLMSG
     *       /4X,A6,G15.4,1H,,3X,A6,G15.4,1H,,3X,5HIREF=,I3)            FPLMSG
```

```
      GOTO 9999                                                         FPLMSG     53
C                                                                       FPLMSG     54
C     INVALID REFRIGERANT NUMBER                                        FPLMSG     55
C                                                                       FPLMSG     56
   30 WRITE (IO,1030) NR                                                FPLMSG     57
 1030 FORMAT(/4X,6HFREON ,I3,34H IS AN INVALID REFRIGERANT NUMBER.)     FPLMSG     58
      STOP                                                              FPLMSG     59
C                                                                       FPLMSG     60
C     PROVIDE ENTRY POINT TO ALLOW USER RETURN ON ERROR                 FPLMSG     61
C                                                                       FPLMSG     62
 9999 CONTINUE                                                          FPLMSG     63
      CALL STRACE                                                       FPLMSG     64
      STOP                                                              FPLMSG     65
      END                                                               FPLMSG     66
      BLOCK DATA                                                        FPLMSG     67
      REAL K                                                            FPLMSG     68
C                                                                       FPLMSG     69
      COMMON/FPL01/ AD,BD,CD,DD,ED,AVP,BVP,CVP,DVP,EVP,FVP,             FPLMSG     70
     1              R,B1,A2,B2,C2,A3,B3,C3,A4,B4,C4,                    FPLMSG     71
     2              A5,B5,C5,A6,B6,C6,K,ALPHA,CPR,                      FPLMSG     72
     3              ACV,BCV,CCV,DCV,FCV,XX,YY                           FPLMSG     73
C                                                                       FPLMSG     74
C                                                                       FPLMSG     75
      REAL LE10,J                                                       FPLMSG     76
C                                                                       FPLMSG     77
      COMMON /FPL02/ LE10,J,IREF,TOL,NR,PC,TC,VC,TFMIN,TFR              FPLMSG     78
C                                                                       FPLMSG     79
C                                                                       FPLMSG     80
      COMMON /FPL05/ IO                                                 FPLMSG     81
C                                                                       FPLMSG     82
      DATA AD,BD,CD,DD,ED,AVP,BVP,CVP,DVP,EVP,FVP,                      FPLMSG     83
     1    R,B1,A2,B2,C2,A3,B3,C3,A4,B4,C4,                              FPLMSG     84
     2    A5,B5,C5,A6,B6,C6,K,ALPHA,CPR,                                FPLMSG     85
     3    ACV,BCV,CCV,DCV,FCV,XX,YY                                     FPLMSG     86
     4  / 34.84, .02696, .834921, 6.02683, -6.55549E-6,                 FPLMSG     87
     5    39.88381727, -3436.632228, -12.47152228, .004730442442, 2*0.0, FPLMSG     88
     6    .088734, .0065093886, -3.409727134, .00159434848, -56.7627671, FPLMSG     89
     7    .06023944654, -1.87961843 1E-5, 1.311399084, -.000548737007,  FPLMSG     90
     8     3*0.0, 3.468834E-9, -2.54390678E-5, 3*0.0, 5.475, 2*0.0,     FPLMSG     91
     9    .0080945, .000332662, -2.413896E-7, 6.72363E-11, 0.0,         FPLMSG     92
     +    39.55655122,-.0165379361 /                                    FPLMSG     93
      DATA LE10/2.302585092994/,J/.185053/,IREF/2/,TOL/1.E-4/,NR/12/    FPLMSG     94
      DATA PC/596.9/,TC/693.3/,VC/.0287/,TFMIN/-252./,TFR/459.70/       FPLMSG     95
      DATA IO/7/                                                        FPLMSG     96
      END                                                               FPLMSG     97
      SUBROUTINE GLOBIN                                                 GLOBIN      2
      COMMON/TGCM/ETACON,ETAMM,ETAGG,FLMC,FLTS,Q16,FLWF,ETA1,ETAG,T14   GLOBIN      3
      COMMON/TVAL/COPC1(10),VT1C1(10),CF1(10),PWR1(10),                 GLOBIN      4
     +            COPC2(10),VT1C2(10),CF2(10),PWR2(10),                 GLOBIN      5
     +            VFTH(10),VT1FTH(10),CFF(10),PWRF(10)                  GLOBIN      6
      COMMON/CONTR/NSTART,NCASES,NCOPC1,ICOPC1,TITLE(50),               GLOBIN      7
     +             NCOPC2,ICOPC2,NFTH,IFTH,NEXT,NCF1,                   GLOBIN      8
     +             NCF2,NCFF                                            GLOBIN      9
      COMMON/SVALGL/XNP,ETAGEN,ETAM,ETAB,TV,MDIAG,PCT,                  GLOBIN     10
     +              DTAIR,SCFMOL,SCFMVL,E7,IE(7),SV(10),                GLOBIN     11
     +              SQB(10),SCFMV,EPSV                                  GLOBIN     12
      COMMON/ELEC/SEVEN,LOADFDT,XMSHP,TPKW,XNMGLD,EXPKW,                GLOBIN     13
     +            GENLD,XMPKW,PURNEW,GENNEW                             GLOBIN     14
      COMMON/CALC/K,Q14,Q1,Q12,Q13,Q15,Q34,X,TSHP,Q33,Q9,               GLOBIN     15
     +            Q5,Q11,Q8,C1,C2,ETH,Q7,ACCPWR,AINPWR,                 GLOBIN     16
     +            PCPWR,T1,SCFMEC,ECMAX,Q24,Q8T,Q8TM,Q12M,              GLOBIN     17
     +            Q14M,Q5M,USPM                                         GLOBIN     18
      COMMON/SU/E1CON1,E2CON1,NP,E2CON2,E2CON3,E3CON1,E3CON3,           GLOBIN     19
```

```
     +          E4CON1,E5CON1,E5CON2,E6CON1,SCFMOUT,E(7)                GLOBIN     20
      COMMON/CDEFAC/C1FAC,C2FAC,CFFAC,DAYNO,HOURNO,FLAG                 GLOBIN     21
      COMMON/IODEV/IN,OUT                                               GLOBIN     22
      COMMON/XNLOAD/XNPC1,XNPC2,XNPT,AC1,AC2,AETH,NDUAL,                GLOBIN     23
     +              NREV,XNPBS,XNPBL,XNPBH,XKOA,XNPB,                   GLOBIN     24
     +              XNPNB,BLOAD,XNBLD,GCF,ECF,DRATE                     GLOBIN     25
      COMMON/SCALC/T33,T34,T0,U73,U74,U83,U84,A73,A74,A83,A84,          GLOBIN     26
     +            G7,G8,TWB,DT,T71,T73,T81,T72,T82,T83,DT82T81          GLOBIN     27
      COMMON/S2CALC/KFLAG,X30LD,X3,DOTOLD,DOTM,R,NR,ETAD                GLOBIN     28
      COMMON/S3CALC/G1,A14,U14,T12,H34AD                                GLOBIN     29
      INTEGER DAYNO,HOURNO,OUT                                          GLOBIN     30
C     READ IN HEADING                                                   GLOBIN     31
      READ(IN,10)(TITLE(I),I=1,50)                                      GLOBIN     32
C     READ IN CONTROL INFORMATION                                       GLOBIN     33
      READ(IN,20)NSTART,NCASES,NCOPC1,ICOPC1,NCOPC2,ICOPC2,NETH,        GLOBIN     34
     +        IETH,NEXT,NCF1,NCF2,NCFE,MDIAG,LOADEDT,NDUAL,NREV         GLOBIN     35
C     READ SINGLE VALUED GLOBAL PARAMETERS                              GLOBIN     36
      READ(IN,50) XNP,ETAGEN,ETAM,ETAB,TV,EPSV,DTAIR,SCFMOL             GLOBIN     37
      READ(IN,50) SCFMVL,E7,ECMAX,PCT,AINPWR,XNPC1,XNPC2,XNPT           GLOBIN     38
      READ(IN,50) XNPBS,Q8TM,Q14M,DRATE,GCF,ECF,ETAG                    GLOBIN     39
      READ(IN,50)     ETACON,ETAMM,ETAGG,FLMC,FLTS,Q16,FLWF,ETA1        GLOBIN     40
      READ(IN,50) DT,T0,G7,G8,T12,U14,A14,G1                            GLOBIN     41
      READ(IN,50) U73,U83,U74,U84,A73,A83,A74,A84                       GLOBIN     42
      READ(IN,20) NSPM,NR                                               GLOBIN     43
C     READ PARASITIC ELECTRIC LOAD CONTROLS                             GLOBIN     44
      READ(IN,20)(IE(I),I=1,7)                                          GLOBIN     45
C     READ COPC1 CURVE                                                  GLOBIN     46
      READ(IN,50)(COPC1(I),VT1C1(I),I=1,NCOPC1)                         GLOBIN     47
C     READ COPC2 CURVE                                                  GLOBIN     48
      READ(IN,50)(COPC2(I),VT1C2(I),I=1,NCOPC2)                         GLOBIN     49
C     READ ETATH CURVE                                                  GLOBIN     50
      READ(IN,50)(VETH(I),VT1ETH(I),I=1,NETH)                           GLOBIN     51
C     READ CORRECTION FACTOR FOR COPC1                                  GLOBIN     52
      READ(IN,50)(CF1(I),PWR1(I),I=1,NCF1)                              GLOBIN     53
C     READ CORRECTION FACTOR FOR COPC2                                  GLOBIN     54
      READ(IN,50)(CF2(I),PWR2(I),I=1,NCF2)                              GLOBIN     55
C     READ CORRECTION FACTOR FOR ETATH                                  GLOBIN     56
      READ(IN,50)(CFE(I),PWRE(I),I=1,NCFE)                              GLOBIN     57
C                                                                       GLOBIN     58
C     FORMATS                                                           GLOBIN     59
10    FORMAT(80A1)                                                      GLOBIN     60
20    FORMAT(16I5)                                                      GLOBIN     61
50    FORMAT(8F10.3)                                                    GLOBIN     62
      RETURN                                                            GLOBIN     63
      END                                                               GLOBIN     64
      SUBROUTINE GLBOUT                                                 GLBOUT      2
      COMMON/TGCM/ETACON,ETAMM,ETAGG,FLMC,FLTS,Q16,FLWF,ETA1,ETAG,T14   GLBOUT      3
      COMMON/TVAL/COPC1(10),VT1C1(10),CF1(10),PWR1(10),                 GLBOUT      4
     +            COPC2(10),VT1C2(10),CF2(10),PWR2(10),                 GLBOUT      5
     +            VETH(10),VT1ETH(10),CFE(10),PWRE(10)                  GLBOUT      6
      COMMON/CONTR/NSTART,NCASES,NCOPC1,ICOPC1,TITLE(50),               GLBOUT      7
     +             NCOPC2,ICOPC2,NETH,IETH,NEXT,NCF1,                   GLBOUT      8
     +             NCF2,NCFE                                            GLBOUT      9
      COMMON/SVALGL/XNP,ETAGEN,ETAM,ETAB,TV,MDIAG,PCT,                  GLBOUT     10
     +              DTAIR,SCFMOL,SCFMVL,E7,IE(7),SV(10),                GLBOUT     11
     +              S08(10),SCFMV,EPSV                                  GLBOUT     12
      COMMON/ELEC/SEVEN,LOADEDT,XMSHP,TPKW,XNMGLD,EXPKW,                GLBOUT     13
     +            GENLD,XMPKW,PURNEW,GENNEW                             GLBOUT     14
      COMMON/CALC/K,Q14,Q1,Q12,Q13,Q15,Q34,X,TSHP,Q33,Q9,               GLBOUT     15
     +            Q5,Q11,Q8,C1,C2,ETH,Q7,ACCPWR,AINPWR,                 GLBOUT     16
     +            PCPWR,T1,SCFNEC,ECMAX,Q24,Q8T,Q8TM,Q12M,              GLBOUT     17
     +            Q14M,Q5M,NSPM                                         GLBOUT     18
      COMMON/SU/E1CON1,E2CON1,NP,E2CON2,E2CON3,E3CON1,E3CON3,           GLBOUT     19
```

```
     +          E4CONT,ESCONT,ESCON2,EGCONT,SCFMOUT,E(7)                GLBOUT    20
      COMMON/COREAC/C1EAC,C2EAC,CEEAC,DAYNO,HOURNO,FLAG                 GLBOUT    21
      COMMON/TODEV/IN,OUT                                               GLBOUT    22
      COMMON/XNLOAD/XNPC1,XNPC2,XNPT,AC1,AC2,AETH,NDUAL,                GLBOUT    23
     +              UREV,XNPBS,XNPBL,XNPBH,XKOA,XNPB,                   GLBOUT    24
     +              XNPNR,BLOAD,XNBLD,GCF,ECF,DRATE                     GLBOUT    25
      COMMON/SCALC/T33,T34,T0,U73,U74,U83,U84,A73,A74,A83,A84,          GLBOUT    26
     +            G7,G8,TWR,DT,T71,T73,T81,T72,T82,T83,DT82T81          GLBOUT    27
      COMMON/S2CALC/KFLAG,X3OLD,X3,DOTOLD,DOTM,R,NR,ETAD                GLBOUT    28
      COMMON/S3CALC/G1,A14,U14,T12,H34AD                                GLBOUT    29
      INTEGER DAYNO,HOURNO,OUT                                          GLBOUT    30
C   WRITE HEADING                                                       GLBOUT    31
      WRITE(OUT,100)(TITLE(I),I=1,50)                                   GLBOUT    32
C   WRITE OUT CONTROL INFORMATION                                       GLBOUT    33
      WRITE(OUT,110)NSTART,NCASES,NCOPC1,ICOPC1,NCOPC2,ICOPC2,NETH,     GLBOUT    34
     +              IETH,MDIAG,NEXT                                     GLBOUT    35
C   WRITE SINGLE VALUED GLOBAL PARAMETERS                               GLBOUT    36
      WRITE(OUT,120) XNP,XNPC1,XNPC2,XNPT,GCF,ECF,DRATE,                GLBOUT    37
     +               Q8TM,Q14M,ETAGEN,ETAM,ETA1,ETAG                    GLBOUT    38
      WRITE(OUT,122) T12,G1,A14,U14,A74,U74,A84,U84,A73,U73,A83,U83,Q16 GLBOUT    39
     +        ,NR                                                       GLBOUT    40
      WRITE(OUT,400) ETACON,ETAMM,ETAGG,FLMC,FLWF,FLTS                  GLBOUT    41
      WRITE(OUT,125) ETAB,DT,T0,G7,G8,TV,EPSV,DTAIR,PCT,AINPWR          GLBOUT    42
C   WRITE LIMITING VALUES                                               GLBOUT    43
      WRITE(OUT,100) (TITLE(I),I=1,50)                                  GLBOUT    44
      WRITE(OUT,130)SCFMVL,SCFMOL,ECMAX                                 GLBOUT    45
C   WRITE PARASITIC ELECTRIC LOAD CONTROLS                              GLBOUT    46
      WRITE(OUT,230)                                                    GLBOUT    47
      DO 5 I=1,7                                                        GLBOUT    48
      IF(IE(I).EQ.0)GO TO 30                                            GLBOUT    49
      WRITE(OUT,235)I                                                   GLBOUT    50
      GO TO 5                                                           GLBOUT    51
30    CONTINUE                                                          GLBOUT    52
      WRITE(OUT,500)I                                                   GLBOUT    53
5     CONTINUE                                                          GLBOUT    54
C   WRITE COPC1 CURVE                                                   GLBOUT    55
      WRITE(OUT,140)ICOPC1                                              GLBOUT    56
      WRITE(OUT,150)(COPC1(I),I=1,NCOPC1)                               GLBOUT    57
      WRITE(OUT,160)(VT1C1(I),I=1,NCOPC1)                               GLBOUT    58
C   WRITE COPC2 CURVE                                                   GLBOUT    59
      WRITE(OUT,170)ICOPC2                                              GLBOUT    60
      WRITE(OUT,180)(COPC2(I),I=1,NCOPC2)                               GLBOUT    61
      WRITE(OUT,190)(VT1C2(I),I=1,NCOPC2)                               GLBOUT    62
C   WRITE ETATH CURVE                                                   GLBOUT    63
      WRITE(OUT,200)IETH                                                GLBOUT    64
      WRITE(OUT,210)(VETH(I),I=1,NETH)                                  GLBOUT    65
      WRITE(OUT,220)(VT1ETH(I),I=1,NETH)                                GLBOUT    66
C   WRITE CORRECTION FACTOR FOR COPC1                                   GLBOUT    67
      WRITE(OUT,240)ICOPC1                                              GLBOUT    68
      WRITE(OUT,250)(CF1(I),I=1,NCF1)                                   GLBOUT    69
      WRITE(OUT,260)(PWR1(I),I=1,NCF1)                                  GLBOUT    70
C   WRITE OUT CORRECTION FACTOR FOR COPC2                               GLBOUT    71
      WRITE(OUT,270)ICOPC2                                              GLBOUT    72
      WRITE(OUT,280)(CF2(I),I=1,NCF2)                                   GLBOUT    73
      WRITE(OUT,290)(PWR2(I),I=1,NCF2)                                  GLBOUT    74
C   WRITE CORRECTION FACTOR FOR ETATH                                   GLBOUT    75
      WRITE(OUT,300)IETH                                                GLBOUT    76
      WRITE(OUT,310)(CFE(I),I=1,NCFE)                                   GLBOUT    77
      WRITE(OUT,320)(PWRE(I),I=1,NCFE)                                  GLBOUT    78
C   FORMATS                                                             GLBOUT    79
100   FORMAT(1H1,20X,50A1,/,20X,50(1H-))                                GLBOUT    80
110   FORMAT(10X,"CONTROLS",/,10X,8(1H-),/,                             GLBOUT    81
     1        15X,"STARTING CASE NUMBER...............",I5,/,          GLBOUT    82
```

```
     2        15X,"NUMBER OF VARIATIONS OF T1,Q1,Q7...",I5,/,          GLBOUT    83
     3        15X,"NUMBER OF VALUES FOR COPC1 CURVE...",I5,/,          GLBOUT    84
     4        15X,"COPC1 CURVE NUMBER.................",I5,/,          GLBOUT    85
     5        15X,"NUMBER OF VALUES FOR COPC2 CURVE...",I5,/,          GLBOUT    86
     6        15X,"COPC2 CURVE NUMBER.................",I5,/,          GLBOUT    87
     7        15X,"NUMBER OF VALUES FOR ETATH CURVE...",I5,/,          GLBOUT    88
     8        15X,"ETATH CURVE NUMBER.................",I5,/,          GLBOUT    89
     1        15X,"DIAGNOSTIC CONTROL.................",I5,/,          GLBOUT    90
     9        15X,"NEXT CASE INDICATOR................",I5/)           GLBOUT    91
120   FORMAT(10X,"GLOBAL PARAMETERS",/,10X,17(1H-),/,                  GLBOUT    92
     1        15X,"NAMEPLATE COOLING..............",F10.1,"TONS",/,   GLBOUT    93
     +        15X,"NAMEPLATE COMPRESSOR 1........",F10.1,"HP  ",/,     GLBOUT    94
     +        15X,"NAMEPLATE COMPRESSOR 2........",F10.1,"HP  ",/,     GLBOUT    95
     +        15X,"NAMEPLATE TURBINE..............",F10.1,"HP  ",/,    GLBOUT    96
     +        15X,"GAS COST FACTOR................",F10.2,"PER MBTU",/, GLBOUT    97
     +        15X,"ELECTRICITY COST FACTOR.......",F10.7,"PER KWHR",/, GLBOUT    98
     +        15X,"ELECTRIC DEMAND RATE...........",F10.7,"PER KWHR",/, GLBOUT    99
     +        15X,"COOLING TOWER DESIGN LOAD.....",F10.1,"BTU/HR",/,   GLBOUT   100
     +        15X,"CHILLER EVAP. DESIGN LOAD.....",F10.1,"BTU/HR",/,   GLBOUT   101
     +        15X,"ETACC..........................",F10.4,"FRACTION",/, GLBOUT   102
     +        15X,"ETART..........................",F10.4,"FRACTION",/, GLBOUT   103
     +        15X,"ETAI...........................",F10.4,"FRACTION",/, GLBOUT   104
     +        15X,"ETAG...........................",F10.4,"FRACTION")   GLBOUT   105
122   FORMAT(                                                          GLBOUT   106
     +        15X,"SUPPLY TEMP TO CHILLER SYSTEM.",F10.1,/,            GLBOUT   107
     +        15X,"WATER FLOW - CHILLER SYSTEM...",F10.1,/,            GLBOUT   108
     +        15X,"HX AREA - REF EVAPORATOR......",F10.1,/,            GLBOUT   109
     +        15X,"HX O/A U - REF EVAPORATOR.....",F10.1,/,            GLBOUT   110
     +        15X,"HX AREA - REF CON HEAT SYSTEM.",F10.1,/,            GLBOUT   111
     +        15X,"HX O/A U - REF CON HEAT SYS...",F10.1,/,            GLBOUT   112
     +        15X,"HX AREA - REF CON COOL TOWER..",F10.1,/,            GLBOUT   113
     +        15X,"HX O/A U - REF CON COOL TOWER.",F10.1,/,            GLBOUT   114
     +        15X,"HX AREA - RANK CON HEAT SYS...",F10.1,/,            GLBOUT   115
     +        15X,"HX O/A U - RANK CON HEAT SYS..",F10.1,/,            GLBOUT   116
     +        15X,"HX AREA - RANK CON COOL TOWER.",F10.1,/,            GLBOUT   117
     +        15X,"HX O/A U - RANK CON COOL TOWER",F10.1,/,            GLBOUT   118
     +        15X,"Q16............................",F10.1,/,            GLBOUT   119
     +        15X,"FREON REFRIGERANT..............",7X,"R",I2)         GLBOUT   120
400   FORMAT(15X,"ETACON.........................",F10.4,/,            GLBOUT   121
     +        15X,"ETAMM.........................",F10.4,/,            GLBOUT   122
     +        15X,"ETAGG.........................",F10.4,/,            GLBOUT   123
     +        15X,"FIX LOSSES MOTOR + COMP.......",F10.4,/,            GLBOUT   124
     +        15X,"FIX LOSSES WIND + FRICTION....",F10.4,/,            GLBOUT   125
     +        15X,"FIX LOSSES TURBINE SHAFT......",F10.4)              GLBOUT   126
  125 FORMAT(                                                          GLBOUT   127
     +        15X,"ETAB...........................",F10.4,"FRACTION",/, GLBOUT   128
     +        15X,"COOLING TOWER APPROACH TEMP...",F10.4,/,            GLBOUT   129
     +        15X,"SUPPLY TEMP TO HEAT SYSTEM....",F10.4,/,            GLBOUT   130
     +        15X,"WATER FLOW - HEAT SYSTEM......",F10.4,/,            GLBOUT   131
     +        15X,"WATER FLOW - COOLING TOWER....",F10.4,/,            GLBOUT   132
     5        15X,"TV.............................", F10.4,/,          GLBOUT   133
     6        15X,"EPSV...........................",F10.4,/,            GLBOUT   134
     7        15X,"CHANGE IN AIR TEMP............",F10.4,/,            GLBOUT   135
     8        15X,"Q8 TOLERANCE..................",F10.4,/,            GLBOUT   136
     +        15X,"INPUT ACCESSORY POWER.........",F10.4)              GLBOUT   137
130   FORMAT(10X,"LIMITING VALUES",/,10X,15(1H-),/,                    GLBOUT   138
     1        15X,"MAX SCFMVL....................",F10.4,/,            GLBOUT   139
     2        15X,"MAX SCFMOL....................",F10.4,/,            GLBOUT   140
     3    15X,"MAX ECONOMIZER................",F10.4,/)               GLBOUT   141
140   FORMAT(10X,"COPC1 CURVE NUMBER",I5,/,10X,21(1H-))                GLBOUT   142
150   FORMAT(12X,"COPC1",10F6.3,/)                                     GLBOUT   143
160   FORMAT(12X,"VTIC1",10F6.1,/)                                     GLBOUT   144
170   FORMAT(/,10X,"COPC2 CURVE NUMBER",I5,/,10X,23(1H-))              GLBOUT   145
```

```
180   FORMAT(12X,"COPC2",10F6.3,/)                                    GLBOUT   146
190   FORMAT(12X,"VT1C2",10F6.1)                                      GLBOUT   147
  200 FORMAT(/,10X,"ETATH CURVE NUMBER",I5,/,10X,23(1H-))             GLBOUT   148
210   FORMAT(12X,"ETATH",10F6.3)                                      GLBOUT   149
220   FORMAT(12X,"VT1ETH",10F6.1)                                     GLBOUT   150
230   FORMAT(10X,"LOAD CONTROLS",/,10X,13(1H-),/)                     GLBOUT   151
235   FORMAT(15X,"ELECTRIC LOAD SUPPLIED BY SYSTEM..","E(",I1,")",/)  GLBOUT   152
500   FORMAT(15X,"ELECTRIC LOAD PURCHASED...........","E(",I1,")",/)  GLBOUT   153
240   FORMAT(/,10X,"COPC1 CORRECTION FACTOR CURVE NUMBER",I5,/,10X,   GLBOUT   154
     1   41(1H-))                                                     GLBOUT   155
250   FORMAT(12X,"CF1",10F6.3)                                        GLBOUT   156
260   FORMAT(12X,"PWR1",10F6.0)                                       GLBOUT   157
270   FORMAT(/,10X,"COPC2 CORRECTION FACTOR CURVE NUMBER",I5,/,10X,   GLBOUT   158
     1    41(1H-))                                                    GLBOUT   159
280   FORMAT(12X,"CF2",10F6.3)                                        GLBOUT   160
290   FORMAT(12X,"PWR2",10F6.0)                                       GLBOUT   161
300   FORMAT(/,10X,"ETATH CORRECTION FACTOR CURVE NUMBER",I5,/,10X,   GLBOUT   162
     1    41(1H-))                                                    GLBOUT   163
310   FORMAT(12X,"CFE",10F6.3)                                        GLBOUT   164
320   FORMAT(12X,"PWRE",10F6.0)                                       GLBOUT   165
      RETURN                                                          GLBOUT   166
      END                                                             GLBOUT   167
      SUBROUTINE CASOUT                                               CASOUT     2
      COMMON/TGCM/ETACON,ETAMM,ETAGG,FLMC,FLTS,Q16,FLWF,ETA1,ETAG,T14 CASOUT    3
      COMMON/TVAL/COPC1(10),VT1C1(10),CF1(10),PWR1(10),               CASOUT     4
     +            COPC2(10),VT1C2(10),CF2(10),PWR2(10),               CASOUT     5
     +            VETH(10),VT1ETH(10),CFE(10),PWRE(10)                CASOUT     6
      COMMON/CONTR/NSTART,NCASES,NCOPC1,ICOPC1,TITLE(50),             CASOUT     7
     +             NCOPC2,ICOPC2,NETH,IETH,NEXT,NCF1,                 CASOUT     8
     +             NCF2,NCFE                                          CASOUT     9
      COMMON/SVALGL/XNP,ETAGEN,ETAM,ETAB,TV,MDIAG,PCT,                CASOUT    10
     +              DTAIR,SCFMOL,SCFMVI,E7,IE(7),SV(10),              CASOUT    11
     +              S08(10),SCFMV,EPSV                                CASOUT    12
      COMMON/ELEC/SEVEN,LOADFDT,XMSHP,TPKW,XNMGLD,EXPKW,              CASOUT    13
     +            GENLD,XMPKW,PURNEW,GENNEW                           CASOUT    14
      COMMON/CALC/K,Q14,Q1,Q12,Q13,Q15,Q34,X,TSHP,Q33,Q9,             CASOUT    15
     +            Q5,Q11,Q8,C1,C2,ETH,Q7,ACCPWR,AINPWR,               CASOUT    16
     +            PCPWR,T1,SCFMEC,ECMAX,Q24,Q8T,Q8TM,Q12M,            CASOUT    17
     +            Q14M,Q5M,NSPM                                       CASOUT    18
      COMMON/SU/E1CON1,E2CON1,NP,E2CON2,E2CON3,E3CON1,E3CON3,         CASOUT    19
     +          E4CON1,E5CON1,E5CON2,E6CON1,SCFMOUT,F(7)              CASOUT    20
      COMMON/CORFAC/C1FAC,C2FAC,CEFAC,DAYNO,HOURNO,FLAG               CASOUT    21
      COMMON/IODEV/IN,OUT                                             CASOUT    22
      COMMON/XNLOAD/XNPC1,XNPC2,XNPT,AC1,AC2,AETH,NDUAL,              CASOUT    23
     +              NREV,XNPBS,XNPBL,XNPBH,XKOA,XNPB,                 CASOUT    24
     +              XNPNB,BLOAD,XNBLD,GCF,FCF,DRATE                   CASOUT    25
      COMMON/SCALC/T33,T34,T0,U73,U74,U83,U84,A73,A74,A83,A84,        CASOUT    26
     +             G7,G8,TWB,DT,T71,T73,T81,T72,T82,T83,DT82T81       CASOUT    27
      COMMON/S2CALC/KFLAG,X30LD,X3,DOTOLD,DOTM,R,NR,ETAD              CASOUT    28
      COMMON/S3CALC/G1,A14,U14,T12,H34AD                              CASOUT    29
      INTEGER DAYNO,HOURNO,OUT                                        CASOUT    30
      DIMENSION FP(7)                                                 CASOUT    31
C---CUR1=HEATING COPC1 CURVE                                          CASOUT    32
C---CURE=THERMAL EFFICIENCY CURVE                                     CASOUT    33
C---CUR2=COOLING COPC2 CURVE                                          CASOUT    34
C---Q9E=HEAT INPUT TO STEAM GENERATOR(DIRECT STEAM AUGMENTATION ONLY) CASOUT    35
C---Q11=TOTAL GAS INPUT ENERGY                                        CASOUT    36
C---Q119=HEAT INPUT-RANKINE CYCLE                                     CASOUT    37
      WRITE(OUT,10)DAYNO,HOURNO                                       CASOUT    38
      IF(FLAG.EQ.2.)WRITE(OUT,90)NSTART                               CASOUT    39
      IF(FLAG.EQ.3.)WRITE(OUT,80)NSTART                               CASOUT    40
      IF(FLAG.EQ.4.)WRITE(OUT,70)NSTART                               CASOUT    41
      IF(FLAG.EQ.5.)WRITE(OUT,50)NSTART                               CASOUT    42
```

```
      Z=SUMF(2.)                                                        CASOUT
      DO 39 I=1,7                                                       CASOUT     44
      EP(I)=F(I)                                                        CASOUT     45
   39 CONTINUE                                                          CASOUT     46
      Z=SUMF(1.)                                                        CASOUT     47
      NFLAG=0                                                           CASOUT     48
      IF(NFLAG.EQ.1) GO TO 49                                           CASOUT     49
      CMP1=Q12/(C1*2545.)                                               CASOUT     50
      CMP2=Q14/(C2*2545.)                                               CASOUT     51
      GO TO 59                                                          CASOUT     52
   49 CALL TLU(BLOAD,B1,PWR1,CF1,NCF1)                                  CASOUT     53
      Q14B=Q14M*BLOAD*(XNPB/(XNPB+XNPNB))/100.                          CASOUT     54
      CMPB=Q14B/(B1*AC2*2545.)                                          CASOUT     55
      CALL TLU(XNBLD,B2,PWR1,CF1,NCF1)                                  CASOUT     56
      CMPN=(Q14-Q14B)/(B2*AC2*2545.)                                    CASOUT     57
   59 CONTINUE                                                          CASOUT     58
      COOL=Q1*ETH*ETAB*ETAM/(X-3413./ETAGEN)                            CASOUT     59
      CUR1=C1/C1FAC                                                     CASOUT     60
      CURE=ETH/CEFAC                                                    CASOUT     61
      CUR2=C2/C2FAC                                                     CASOUT     62
      Q9E=Q9/ETAB                                                       CASOUT     63
      Q119=Q11-(Q9/ETAB)                                                CASOUT     64
      Q711=Q7/Q11                                                       CASOUT     65
      WRITE(OUT,110)T1,Q1,Q7,Q15                                        CASOUT     66
      WRITE(OUT,120) Q8T,SCFMEC,SCFMV,Q13,SCFMOUT,Q12                   CASOUT     67
      WRITE(OUT,130) Q34,Q33,Q119,Q9                                    CASOUT     68
      WRITE(OUT,140)Q9E,Q11                                             CASOUT     69
      IF(NFLAG.EQ.0) WRITE(OUT,150) AINPWR,CMP1,CMP2,TSHP,XNP           CASOUT     70
      IF(NFLAG.EQ.1) WRITE(OUT,250) AINPWR,CMPB,CMPN,TSHP,XNP           CASOUT     71
      WRITE(OUT,215) XMSHP,XMPKW,TPKW,EXPKW,GENLD                       CASOUT     72
      WRITE(OUT,170) ETAB,ETAM                                          CASOUT     73
      WRITE(OUT,160)CURE,CEFAC,ETH                                      CASOUT     74
      IF(NFLAG.EQ.0) WRITE(OUT,180)CUR2,C2FAC,C2                        CASOUT     75
      IF(NFLAG.EQ.1) WRITE(OUT,230) AC2,XKOA,C2                         CASOUT     76
      IF(NFLAG.EQ.0) WRITE(OUT,200) CUR1,C1FAC,C1                       CASOUT     77
      IF(NFLAG.EQ.1) WRITE(OUT,240) XNPB,BLOAD,XNPNB,XNBLD              CASOUT     78
      WRITE(OUT,210) (I,F(I),EP(I),I=1,7)                               CASOUT     79
      WRITE(OUT,220) SUMF(1.),SUMF(2.)                                  CASOUT     80
      WRITE(OUT,260) GENNEW,PURNEW                                      CASOUT     81
      IF(MDTAG.NE.60) GO TO 500                                         CASOUT     82
      WRITE(OUT,270) T71,T72,T73,T81,T82,T83,TWB,T33,T34,T14            CASOUT     83
      WRITE(OUT,280) X3OLD,DOTOLD,X3,DOTM,R,ETAD,H34AD,Q14              CASOUT     84
500   CONTINUE                                                          CASOUT     85
C                                                                       CASOUT     86
C   FORMATS                                                             CASOUT     87
C                                                                       CASOUT     88
10    FORMAT(49X,10HDAY NUMBER,3X,I5,/,49X,11HHOUR NUMBER,2X,I5,/)      CASOUT     89
50    FORMAT(12X,10HTOWER LOAD,27X,8HCASE NO.,5X,I5,//)                 CASOUT     90
70    FORMAT(12X,12HDIRECT STEAM,25X,8HCASE NO.,5X,I5,//)               CASOUT     91
80    FORMAT(12X,18HOUTSIDE EVAPORATOR,19X,8HCASE NO.,5X,I5,//)         CASOUT     92
90    FORMAT(12X,9HVENT LOAD,28X,8HCASE NO.,5X,I5,//)                   CASOUT     93
110   FORMAT(12X,34HAMBIENT TEMPERATURE................,F12.1,3X,5HDEG F,CASOUT     94
     * /,                                                               CASOUT     95
     1  12X,34HREQUIRED COOLING LOAD..............,F12.0,3X,6HBTU/HR,/,  CASOUT     96
     2   12X,34HREQUIRED HEATING LOAD..............,F12.0,3X,6HBTU/HR,/, CASOUT     97
     +  12X,34HECONOMIZER COOLING LOAD............,F12.0,3X,6HBTU/HR)   CASOUT     98
120   FORMAT(12X,34HCOOLING TOWER LOAD.................,F12.0,3X,6HBTU/HR CASOUT     99
     * ,/,                                                              CASOUT    100
     +   12X,34HSCFMEC...........................,F12.0,3X,4HSCFM,/,    CASOUT    101
     1   12X,34HSCFMREC...........................,F12.0,3X,4HSCFM,/,   CASOUT    102
     2   12X,34HVENTILATION LOAD..................,F12.0,3X,6HBTU/HR,/, CASOUT    103
     3   12X,34HSCFMOUT...........................,F12.0,3X,4HSCFM,/,   CASOUT    104
     +   12X,34HOUTSIDE AIR LOAD..................,F12.0,3X,6HBTU/HR)   CASOUT    105
```

```
130   FORMAT(12X,34HREFRIGERANT CONDENSER HEAT LOAD...,F12.0,3X,          CASOUT    106
     $     6HBTU/HR,/,                                                    CASOUT    107
     1 12X,34HRANKINE CONDENSER HEAT LOAD........,F12.0,3X,6HBTU/HR,/,    CASOUT    108
     2 12X,34HHEAT INPUT TO STEAM GENERATOR      ,/,                      CASOUT    109
     3 12X,34H      (RANKINE CYCLE ONLY)..........,F12.0,3X,6HBTU/HR,/,   CASOUT    110
     +    12X,34HDIRECT STEAM AUGMENTATION..........,F12.0,3X,6HBTU/HR)  CASOUT    111
140   FORMAT(12X,34HHEAT INPUT TO STEAM GENERATOR       , /,             CASOUT    112
     1 12X,34H  (DIRECT STEAM AUGMENTATION ONLY),F12.0,3X,6HBTU/HR,/,    CASOUT    113
     +    12X,34HTOTAL GAS INPUT ENERGY............,F12.0,3X,6HBTU/HR)   CASOUT    114
150   FORMAT(12X,34HPARASITIC SHAFT POWER..............,F12.2,3X,6HHP   CASOUT    115
     #,/,                                                                CASOUT    116
     1  12X,34HC1 SHAFT POWER.....................,F12.2,3X,6HHP     ,/,  CASOUT    117
     1  12X,34HC2 SHAFT POWER.....................,F12.2,3X,6HHP     ,/,  CASOUT    118
     1 12X,34HTURBINE SHAFT POWER................,F12.2,3X,6HHP     ,/,   CASOUT    119
     +  12X34HNAMEPLATE COOLING..................,F12.0,3X,6HTONS   )    CASOUT    120
160   FORMAT(12X,34HTHERMAL EFFICIENCY                    ,/,            CASOUT    121
     1  12X,5HCURVE,F5.2,2X,17HCORRECTION FACTOR,F5.2,2X,6HACTUAL,F7.4   CASOUT    122
     +)                                                                  CASOUT    123
170   FORMAT(12X,34HSTEAM GENERATOR EFFICIENCY.........,F12.2,/,         CASOUT    124
     +  12X,34HMECHANICAL EFFICIENCY..............,F12.2)                CASOUT    125
180   FORMAT(12X,34HCOOLING COPC2.....................,/,               CASOUT    126
     1 12X,5HCURVE,F5.2,2X,17HCORRECTION FACTOR,F5.2,2X,6HACTUAL,        CASOUT    127
     +  F7.3)                                                            CASOUT    128
200   FORMAT(12X,34HHEATING COPC) EXCLUDING ELECTRIC  ,/,                 CASOUT    129
     1 12X,5HCURVE,F5.2,2X,17HCORRECTION FACTOR,F5.2,2X,6HACTUAL,        CASOUT    130
     3  F7.3,/)                                                          CASOUT    131
210   FORMAT(12X,2HE(,I1,34H)=FAN COILS OR COOLING TOWER FAN...,F12.5,   CASOUT    132
     +    3X,2HKW,5X,F12.5,3X,2HKW,/,                                    CASOUT    133
     1 12X,2HE(,I1,34H)=VARIABLE AIR VOL SYS.............,F12.5,3X,2HKW,  CASOUT    134
     +    5X,F12.5,3X,2HKW,/,                                            CASOUT    135
     2 12X,2HE(,I1,34H)=CONTROLS AND ACCES...............,F12.5,3X,2HKW,  CASOUT    136
     +    5X,F12.5,3X,2HKW,/,                                            CASOUT    137
     3 12X,2HE(,I1,34H)=WATER CIRCULATORS................,F12.5,3X,2HKW,  CASOUT    138
     +    5X,F12.5,3X,2HKW,/,                                            CASOUT    139
     + 12X,2HE(,I1,34H)=RETURN/EXHAUST FAN...............,F12.5,3X,2HKW  CASOUT    140
     +    ,5X,F12.5,3X,2HKW,/,                                           CASOUT    141
     5 12X,2HE(,I1,34H)=OUTDOOR AIR COIL.................,F12.5,3X,2HKW  CASOUT    142
     +     ,5X,F12.5,3X,2HKW,/,                                          CASOUT    143
     +12X,2HE(,I1,34H)=BOILER FEED + LUBE PUMP..........,F12.5,3X,2HKW   CASOUT    144
     +     ,5X,F12.5,3X,2HKW)                                            CASOUT    145
  215 FORMAT(12X,34HMOTOR SHAFT POWER.................,F12.2,3X,2HHP,/,  CASOUT    146
     +        12X,34HMOTOR PURCHASED POWER.............,F12.2,3X,2HKW,/,  CASOUT    147
     +        12X,34HTOTAL PURCHASED POWER.............,F12.2,3X,2HKW,/,  CASOUT    148
     +        12X,34HEXPORTED POWER....................,F12.2,3X,2HKW,/,  CASOUT    149
     +        12X,34HGENERATOR LOAD....................,F12.2,3X,2HKW)   CASOUT    150
220   FORMAT(12X,34H                                  ,21H-------------- CASOUT    151
     +-------,3X,18H-----------------,/,                                  CASOUT    152
     +    12X,37HTOTAL ELECTRIC POWER GENERATED........,F12.5,3X,2HKW,   CASOUT    153
     +  5X,F12.5,3X,12HPURCHASED KW,/)                                   CASOUT    154
  230 FORMAT(12X,25HDUAL COMPRESSOR OPERATION,/,                         CASOUT    155
     +        12X,3HCOP,F5.2,2X,21HO/A CORRECTION FACTOR,F5.2,2X,        CASOUT    156
     +        6HACTUAL,F5.2)                                             CASOUT    157
  240 FORMAT(12X,24HBASE COMPRESSOR RATING...,F5.1,1X,14HPERCENT LOAD...,CASOUT    158
     +        F5.1,/,                                                    CASOUT    159
     +        12X,24HNON-BASE COMP.  RATING...,F5.1,1X,14HPERCENT LOAD...CASOUT    160
     +        F5.1,/,)                                                   CASOUT    161
  250 FORMAT(12X,34HPARASITIC SHAFT POWER..............                  CASOUT    162
     +        F12.2,3X,2HHP,/,                                           CASOUT    163
     +        12X,34HBASE COMPRESSOR SHAFT POWER........,F12.2,3X,2HHP,/, CASOUT    164
     +        12X,34HNON-BASE COMPRESSOR SHAFT POWER...,F12.2,3X,2HHP,/, CASOUT    165
     +        12X,34HTURBINE SHAFT POWER...............,F12.2,3X,2HHP,/, CASOUT    166
     +        12X,34HNAMEPLATE COOLING.................,F12.2,3X,4HTONS) CASOUT    167
  260 FORMAT(12X,37HREDISTRIBUTED ELECTRIC POWER..........              CASOUT    168
```

```
     +        F12.5,3X,2HKW,5X,F12.5,3X,12HPURCHASED KW,/)                    CASOUT
270   FORMAT(4H0    ,"T71",6X,"T72",6X,"T73",6X,"T81",6X,"T82",6X,           CASOUT     170
     +               "T83",6X,"TWB",6X,"T33",6X,"T34",6X,"T14",/,             CASOUT     171
     +              10(F7.2,2X))                                              CASOUT     172
280   FORMAT(4H0    ,"X30",7X,"DTO",7X,"X3 ",7X,"DOT",7X," R ",              CASOUT     173
     +                7X,"ETD",7X,"34D",/,7(F8.2,2X),"   Q14=",F12.2)         CASOUT     174
      RETURN                                                                  CASOUT     175
      END                                                                     CASOUT     176
      FUNCTION SUME(A)                                                        SUME         2
      COMMON/TGCM/ETACON,ETAMM,ETAGG,FLMC,FLTS,Q16,FLWF,ETA1,ETAG,T14         SUME         3
C---SUMMATION OF ELECTRICAL LOADS                                             SUME         4
      COMMON/TVAL/COPC1(10),VT1C1(10),CF1(10),PWR1(10),                       SUME         5
     +            COPC2(10),VT1C2(10),CF2(10),PWR2(10),                       SUME         6
     +            VETH(10),VT1ETH(10),CFE(10),PWRE(10)                        SUME         7
      COMMON/CONTR/NSTART,NCASES,NCOPC1,ICOPC1,TITLE(50),                     SUME         8
     +             NCOPC2,ICOPC2,NETH,IETH,NEXT,NCF1,                         SUME         9
     +             NCF2,NCFE                                                  SUME        10
      COMMON/SVALGL/XNP,ETAGEN,ETAM,ETAB,TV,MDIAG,PCT,                        SUME        11
     +              DTAIR,SCFMOL,SCFMVL,E7,IE(7),SV(10),                      SUME        12
     +              S08(10),SCFMV,EPSV                                        SUME        13
      COMMON/ELEC/SEVEN,LOADEDT,XMSHP,TPKW,XNMGLD,EXPKW,                      SUME        14
     +            GENLD,XMPKW,PURNEW,GENNEW                                   SUME        15
      COMMON/CALC/K,Q14,Q1,Q12,Q13,Q15,Q34,X,TSHP,Q33,Q9,                     SUME        16
     +            Q5,Q11,Q8,C1,C2,ETH,Q7,ACCPWR,AINPWR,                       SUME        17
     +            PCPWR,T1,SCFMEC,ECMAX,Q24,Q8T,Q8TM,Q12M,                    SUME        18
     +            Q14M,Q5M,NSPM                                               SUME        19
      COMMON/SU/E1CON1,E2CON1,NP,E2CON2,E2CON3,E3CON1,E3CON3,                 SUME        20
     +          E4CON1,E5CON1,E5CON2,E6CON1,SCFMOUT,E(7)                      SUME        21
      COMMON/COPFAC/C1FAC,C2FAC,CFFAC,DAYNO,HOURNO,FLAG                       SUME        22
      COMMON/IODEV/IN,OUT                                                     SUME        23
      COMMON/XNLOAD/XNPC1,XNPC2,XNPT,AC1,AC2,AETH,NDUAL,                      SUME        24
     +              NREV,XNPBS,XNPBL,XNPBH,XKOA,XNPB,                         SUME        25
     +              XNPNB,BLOAD,XNBLD,GCF,ECF,DRATE                           SUME        26
      COMMON/SCALC/T33,T34,T0,U73,U74,U83,U84,A73,A74,A83,A84,                SUME        27
     +             G7,G8,TWB,DT,T71,T73,T81,T72,T82,T83,DT82T81               SUME        28
      COMMON/S2CALC/KFLAG,X30LD,X3,DOTOLD,DOTM,R,NR,ETAD                      SUME        29
      COMMON/S3CALC/G1,A14,U14,T12,H34AD                                      SUME        30
C                                                                             SUME        31
C---A=1 - GENERATED                                                           SUME        32
C---A=2 - PURCHASED                                                           SUME        33
      IF(A.NE.(2.)) GO TO 8                                                   SUME        34
      DO 5 I=1,7                                                              SUME        35
      IE(I)=IABS(IE(I)-1)                                                     SUME        36
    5 CONTINUE                                                                SUME        37
    8 CONTINUE                                                                SUME        38
      IF(NSPM.EQ.1) GO TO 10                                                  SUME        39
C                                                                             SUME        40
C---NON-SYS PERF MODE CALC                                                    SUME        41
      E(1)=E1CON1*(Q7+Q8T)*IE(1)                                              SUME        42
      E(2)=E2CON1*(XNP/E2CON2+(2./3.)*Q1/12000.)*IE(2)                        SUME        43
      E(3)=(E3CON1*XNP+E3CON3*Q11)*IE(3)                                      SUME        44
      E(4)=E4CON1*((Q14/10)+(Q5/25))*IE(4)                                    SUME        45
      E(5)=E5CON1*(SCFMVL+ECMAX-SCFMEC)*IE(5)                                 SUME        46
      E(6)=E6CON1*SCFMOUT*IE(6)                                               SUME        47
      E(7)=E7*IE(7)                                                           SUME        48
      GO TO 20                                                                SUME        49
   10 CONTINUE                                                                SUME        50
C                                                                             SUME        51
C---SYS PERF MODE CALC                                                        SUME        52
      E1A=E1CON1*G7                                                           SUME        53
      E1B=E1CON1*(0.3+0.7*Q8T/Q8TM)*Q8TM                                      SUME        54
      IF(Q8T.EQ.(0.)) E1B=0.0                                                 SUME        55
      E(1)=(E1A+E1B)*IE(1)                                                    SUME        56
```

```
      E(2)=E2CON1*(XNP/E2CON2+(2./3.)*Q1/12000.)*IE(2)                  SUME      57
      E(3)=(E3CON1*XNP+E3CON3*Q11)*IE(3)                                SUME      58
      E4A=.000007*(0.4+0.6*Q14/Q14M)*Q14M                               SUME      59
      E4B=.0000028*(0.4+0.6*Q5/Q5M)*Q5M                                 SUME      60
      IF(Q14.LT.(.1)) E4A=0.0                                           SUME      61
      IF(Q5.EQ.(0.)) E4B=0.0                                            SUME      62
      E(4)=(E4A+E4B)*IE(4)                                              SUME      63
      E(5)=E5CON1*(SCFMVL+ECMAX-SCFMEC)*IE(5)                           SUME      64
      IF(Q12.EQ.(0.)) E(6)=0.0                                          SUME      65
      IF(Q12.GT.(0.))                                                   SUME      66
     +  E(6)=E6CON1*(0.3+0.7*SCFMOUT/SCFMOL)*SCFMOL*IE(6)               SUME      67
      E(7)=E7*IE(7)                                                     SUME      68
   20 CONTINUE                                                          SUME      69
      SUME=E(1)+E(2)+E(3)+E(4)+E(5)+E(6)+E(7)                           SUME      70
      IF(A.NE.(2.)) GO TO 99                                            SUME      71
      DO 6 I=1,7                                                        SUME      72
      IE(I)=IABS(IE(I)-1)                                               SUME      73
    6 CONTINUE                                                          SUME      74
   99 RETURN                                                            SUME      75
      END                                                               SUME      76
      SUBROUTINE TLU(A,B,C,D,N)                                         TLU        2
C           LINEAR INTERPOLATION ROUTINE                                TLU        3
C     A= INDEPENDENT VARIABLE                                           TLU        4
C     B= DEPENDENT VARIABLE  (ANSWER)                                   TLU        5
C     C= INDEPENDENT TABLE                                              TLU        6
C     D= DEPENDENT TABLE                                                TLU        7
C     N= NUMBER OF POINTS IN TABLE                                      TLU        8
C     INDEPENDENT TABLE MUST BE SORTED, EITHER ASCENDING OR DESCENDING  TLU        9
      DIMENSION C(1),D(1)                                               TLU       10
      IF(N-1)1,2,3                                                      TLU       11
    1 B=0.                                                              TLU       12
      GO TO 100                                                         TLU       13
    2 B=D(1)                                                            TLU       14
      GO TO 100                                                         TLU       15
    3 ML=1                                                              TLU       16
      MU=N                                                              TLU       17
    8 IF(MU-ML-1) 15,15,9                                               TLU       18
    9 M=(MU+ML)/2                                                       TLU       19
      IF(C(1)-C(2))11,2,10                                              TLU       20
   10 IF(C(M)-A)13,12,14                                                TLU       21
   11 IF(A-C(M))13,12,14                                                TLU       22
   12 B=D(M)                                                            TLU       23
      GO TO 100                                                         TLU       24
   13 MU=M                                                              TLU       25
      GO TO 8                                                           TLU       26
   14 ML=M                                                              TLU       27
      GO TO 8                                                           TLU       28
   15 B=D(ML)+(D(MU)-D(ML))*((A-C(ML))/(C(MU)-C(ML)))                   TLU       29
  100 RETURN                                                            TLU       30
      END                                                               TLU       31
```

ATTACHMENT E

CLEVELAND OFFICE BUILDING COOLING AND HEATING LOADS

Hours	Ambient Temp. °F	Cooling Load Btu/hr	Heating Load Btu/hr
1	-5	0.	714000.
3	-5	0.	999600.
27	5	0.	428400.
1	5	357000.	428400.
2	5	499800.	428400.
4	5	642600.	428400.
67	5	0.	714000.
1	5	785400.	714000.
1	5	928200.	714000.
1	5	1071000.	714000.
11	5	0.	999600.
3	5	0.	1285200.
174	15	0.	428400.
2	15	71400.	428400.
3	15	214200.	428400.
18	15	357000.	428400.
34	15	499800.	428400.
30	15	642600.	428400.
6	15	785400.	428400.
1	15	928200.	428400.
90	15	0.	714000.
2	15	0.	999600.
2	15	0.	1285200.
803	25	0.	428400.
9	25	71400.	428400.
2	25	214200.	428400.
35	25	357000.	428400.
165	25	499800.	428400.
61	25	642600.	428400.
36	25	785400.	428400.
9	25	928200.	428400.
1	25	1071000.	428400.
1	25	1213800.	428400.
39	25	0.	714000.
7	25	0.	999600.
1	25	0.	1285200.
943	35	0.	428400.
17	35	71400.	428400.
24	35	214200.	428400.
28	35	357000.	428400.
164	35	499800.	428400.
116	35	642600.	428400.
52	35	785400.	428400.
33	35	928200.	428400.
2	35	1071000.	428400.
1	35	1356600.	428400.
3	35	0.	714000.
2	35	0.	999600.
701	45	0.	142800.
15	45	71400.	142800.
29	45	214200.	142800.
21	45	357000.	142800.
46	45	499800.	142800.
178	45	642600.	142800.
48	45	785400.	142800.
51	45	928200.	142800.
13	45	1071000.	142800.
4	45	1213800.	142800.
1	45	1499400.	142800.
8	45	0.	428400.
1	45	0.	714000.
745	55	0.	142800.
11	55	71400.	142800.
11	55	214200.	142800.
18	55	357000.	142800.
53	55	499800.	142800.
139	55	642600.	142800.
139	55	785400.	142800.
82	55	928200.	142800.
38	55	1071000.	142800.
2	55	1213800.	142800.
4	55	1356600.	142800.
5	55	1499400.	142800.
1	65	71400.	0.
4	65	214200.	0.
9	65	357000.	0.
17	65	499800.	0.
36	65	642600.	0.
96	65	785400.	0.
92	65	928200.	0.
56	65	1071000.	0.
6	65	1213800.	0.
5	65	1356600.	0.
13	65	1499400.	0.
453	65	0.	142800.
4	65	214200.	142800.
7	65	357000.	142800.
26	65	499800.	142800.
54	65	642600.	142800.
81	65	785400.	142800.
63	65	928200.	142800.
30	65	1071000.	142800.
3	65	1213800.	142800.
8	65	1356600.	142800.
6	65	1499400.	142800.
1	75	214200.	0.
8	75	357000.	0.
12	75	499800.	0.
16	75	642600.	0.
47	75	785400.	0.
156	75	928200.	0.
182	75	1071000.	0.
174	75	1213800.	0.
63	75	1356600.	0.
34	75	1499400.	0.
1	85	357000.	0.
7	85	499800.	0.
9	85	642600.	0.
9	85	785400.	0.
9	85	928200.	0.
28	85	1071000.	0.
76	85	1213800.	0.
99	85	1356600.	0.
50	85	1499400.	0.
2	95	785400.	0.
3	95	928200.	0.
10	95	1356600.	0.
35	95	1499400.	0.

$ TOP

ATTACHMENT F

OTHER PERTINENT INFORMATION - DRAWINGS NOT REFERENCED

MECHANICAL TECHNOLOGY INCORPORATED

F-2

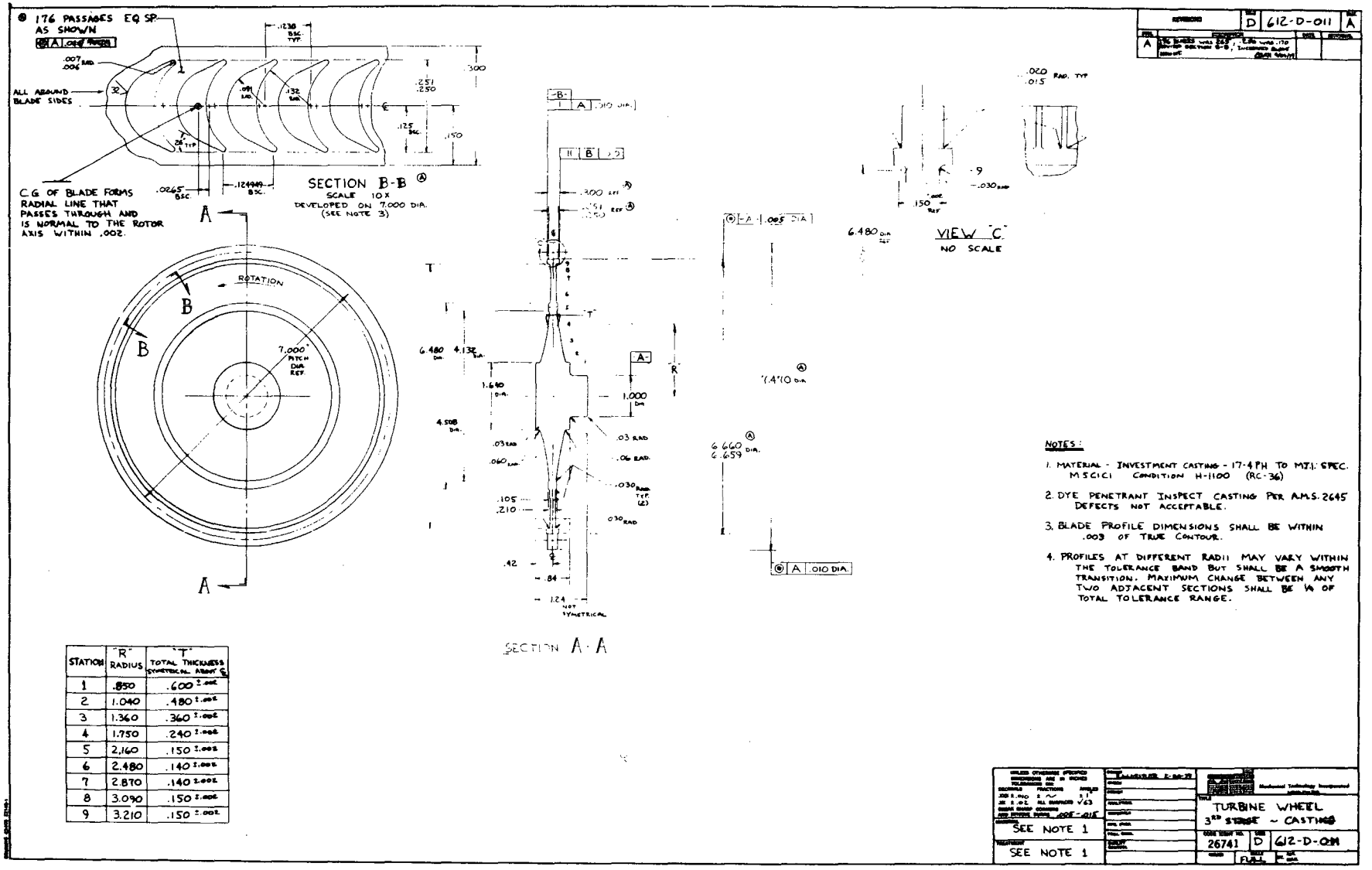

STATION	"R" RADIUS	"T" TOTAL THICKNESS SYMETRICAL ABOUT ℄
1	.850	.600 ±.002
2	1.040	.480 ±.002
3	1.360	.360 ±.002
4	1.750	.240 ±.002
5	2.160	.150 ±.002
6	2.480	.140 ±.002
7	2.870	.140 ±.002
8	3.090	.150 ±.002
9	3.210	.150 ±.002

792867

MECHANICAL TECHNOLOGY INCORPORATED

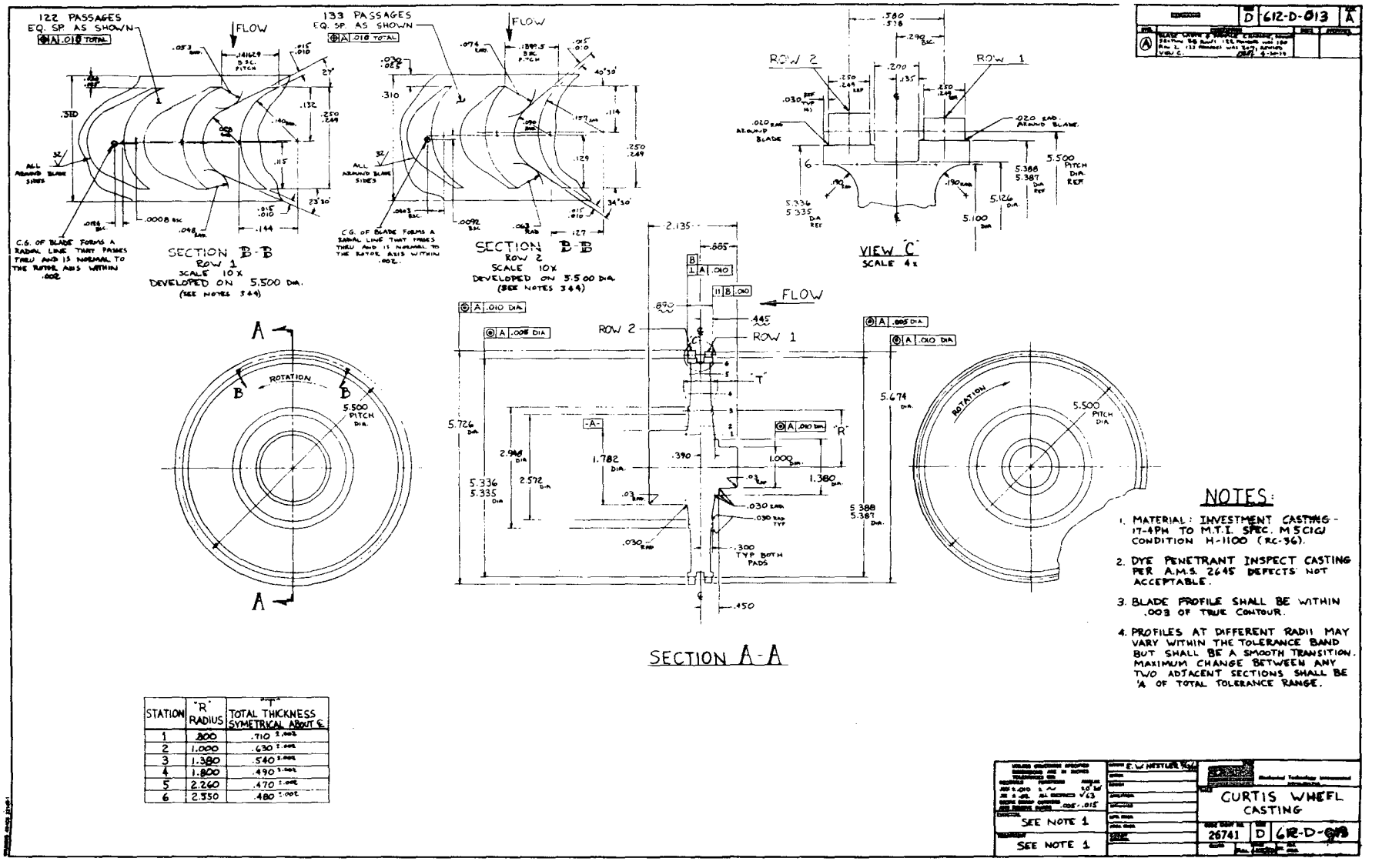

STATION	"R" RADIUS	"T" TOTAL THICKNESS SYMETRICAL ABOUT ℄
1	.800	.710 ±.005
2	1.000	.630 ±.005
3	1.380	.540 ±.005
4	1.800	.490 ±.005
5	2.260	.470 ±.005
6	2.550	.480 ±.005

792864

MEAN LINE COORDINATES

	HUB				SHROUD			
STA.	R_H	ϕ HUB	Z_H	T_H (NORMAL)	R_S	ϕ SHROUD	Z_S	T_S (NORMAL)
LE	.900	159.8°	2.500	.075	1.750	115.1°	2.500	.048
1	.626	121.7°	2.089	.086	1.773	95.8°	2.163	.049
2	.839	90.1°	1.580	.080	1.855	76.3°	1.800	.057
3	1.110	65.3°	1.070	.089	1.952	59.5°	1.470	.063
4	1.430	46.1°	.710	.083	2.075	45.2°	1.140	.065
5	1.776	31.5°	.430	.077	2.232	29.7°	.850	.064
6	2.215	19.0°	.190	.066	2.490	17.7°	.580	.058
7	2.709	8.7°	.040	.055	2.780	7.9°	.370	.050
TE	3.100	0.0°	.000	.050	3.100	0.0°	.250	.045

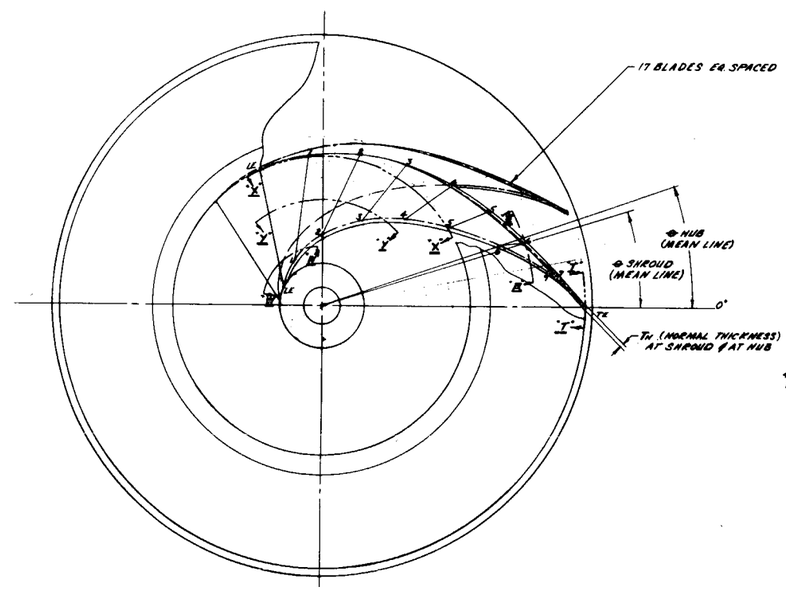

SCALE: 2"=1

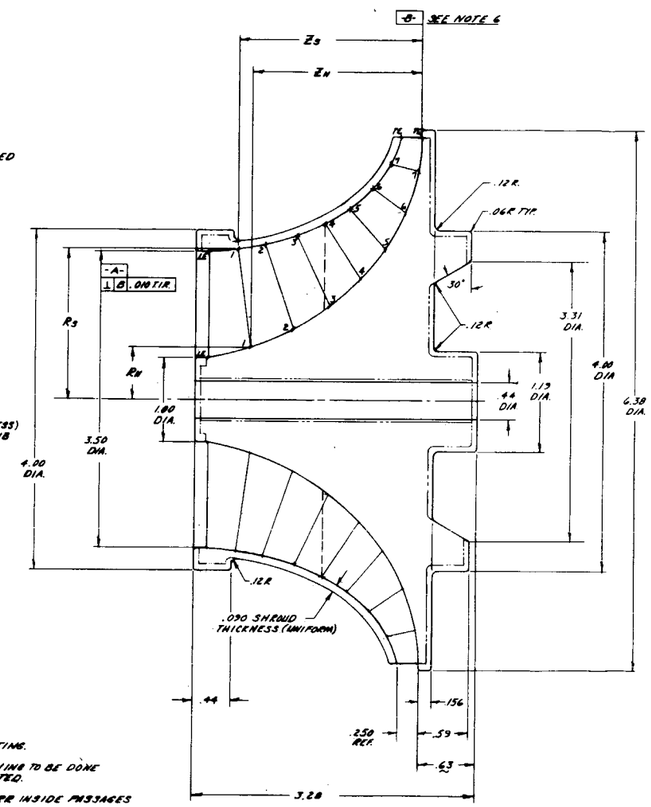

SCALE: 2"=1"

NOTES:

1. MAT'L: ALUMINUM ALLOY. C355 T6 CASTING.
2. HEAT TREAT TO BRINNELL 85-115. CLEANING TO BE DONE BY VENDOR. NO STRAIGHTENING PERMITTED.
3. PASSAGES TO BE ▽ AS CAST, DO NOT BURR INSIDE PASSAGES EXCEPT FOR CORE JOINTS.
4. FLUORESCENT PENETRANT INSPECT PRIOR TO X-RAY PER MIL-I-6866.
5. X-RAY INSPECTION REQUIRED PER MIL-I-6865B.
6. DATUM -B- IS DEFINED BY AVERAGE OF POINTS MIDWAY BETWEEN BLADES AT 6.200 DIA.
7. ALL BLADE SHAPE DIMENSIONS ARE BASIC AND SHALL BE WITHIN .005 OF TRUE CONTOUR.
8. UNLESS OTHERWISE SPECIFIED, DIA'S TO BE CONCENTRIC WITHIN .010 TIR.
9. INTERSECTION BETWEEN BLADE & INSIDE SURFACE OF SHROUD TO BE .02-.040 R. FILLET RADIUS.

UNLESS OTHERWISE SPECIFIED DIMENSIONS ARE IN INCHES TOLERANCES OF: DECIMALS ±FRACTIONS ANGLES .XX ± .01 ± — ± 1° .XXX ± .002 ALL SURFACES √80 BREAK SHARP CORNERS DEBURR REMOVE BURRS .005"-.015"	DRAWN J. BERGMANN 3/14/77	MTI Mechanical Technology Incorporated	A
	APPROVED A.F. Cesia 4/14/77	TITLE COMPRESSOR WHEEL CASTING-CNG	
MATERIAL AS NOTED			
TREATMENT AS NOTED		CODE IDENT NO. 26741 SIZE E DWG NO. 612 E021	
		SCALE AS NOTED WT. SHEET 1 OF 3	

MECHANICAL TECHNOLOGY INCORPORATED

MTI-19791

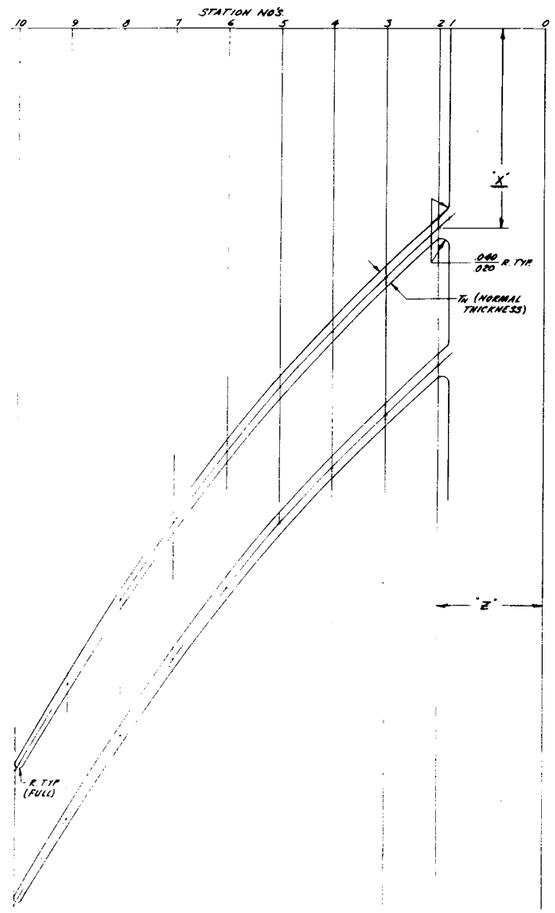

SECTION 'X-X' SCALE 5"=1"

SECTION 'X-X' AT R=1.75			
MEAN BLADE LINE COORDINATES & NORMAL BLADE THICKNESS			
STA	Z	X	T_N
1	.450	.904	.078
2	.550	.947	.078
3	.750	1.141	.075
4	1.000	1.430	.074
5	1.250	1.695	.070
6	1.500	2.001	.065
7	1.750	2.337	.060
8	2.000	2.703	.054
9	2.250	3.100	.047
10	2.500	3.512	.040

SECTION Z-Z AT R=2.500			
MEAN BLADE LINE COORDINATES & NORMAL BLADE THICKNESS			
STA	Z	X	T_N
1	.000	.544	.0588
2	.100	.545	.0588
3	.200	.586	.0578
4	.300	.628	.0575
5	.400	.676	.0573
6	.500	.729	.0572
7	.570	.768	.0570
8	.600	.785	.0570

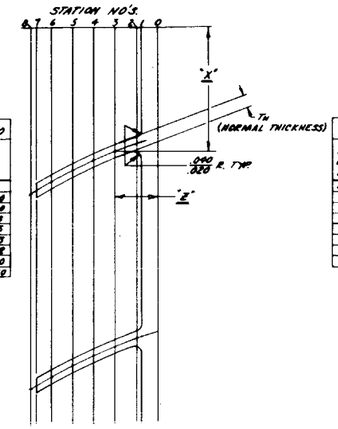

SECTION Z-Z SCALE 5"=1"

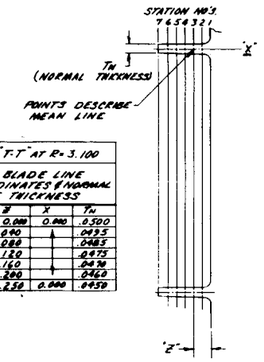

VIEW T-T SCALE 5"=1"

VIEW T-T AT R=3.100			
MEAN BLADE LINE COORDINATES & NORMAL BLADE THICKNESS			
STA	Z	X	T_N
1	0.000	0.000	0.500
2	.040		.0435
3	.080		.0485
4	.120		.0475
5	.160		.0470
6	.200		.0460
7	.250	0.000	.0450

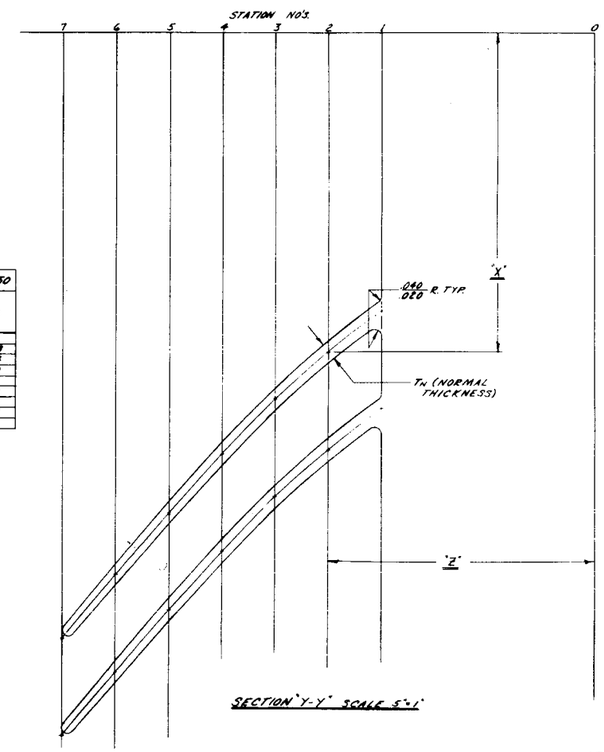

SECTION 'Y-Y' SCALE 5"=1"

SECTION 'Y-Y' AT R=1.250			
MEAN BLADE LINE COORDINATES & NORMAL BLADE THICKNESS			
STA.	Z	X	T_N
1	1.000	1.309	.088
2	1.250	1.500	.084
3	1.500	1.726	.079
4	1.750	1.980	.074
5	2.000	2.260	.068
6	2.250	2.555	.062
7	2.500	2.852	.055

SCALE: 5"=1"			
DRAWN: J. Bernstein 5/20/79			
A.R. Cellak 4/11/79			
SEE SHEET 1			
SEE SHEET 1			
Mechanical Technology Incorporated			
TITLE: COMPRESSOR WHEEL CASTING-CNG			
26741	E	612E021	
AS SHOWN			
SH 2 OF 3			

MECHANICAL TECHNOLOGY INCORPORATED

MTI-19770

SECTION "W-W" at R=.700			
MEAN BLADE LINE COORDINATES & NORMAL BLADE THICKNESS			
STA	Z	X	T_N
1	1.820	1.354	.088
2	1.900	1.393	.086
3	2.018	1.451	.083
4	2.100	1.509	.080
5	2.200	1.574	.077
6	2.300	1.643	.075
7	2.400	1.720	.072
8	2.500	1.802	.069

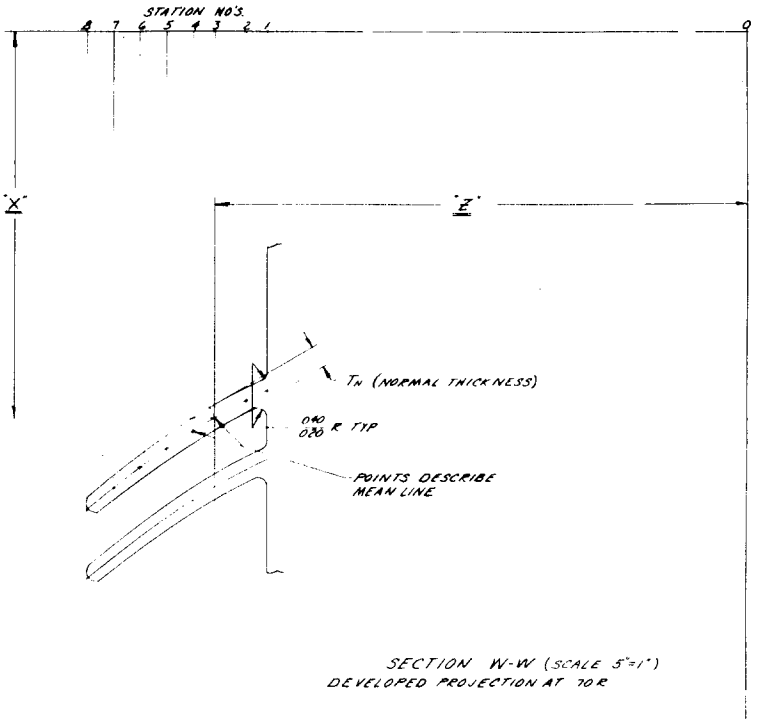

SECTION W-W (SCALE 5"=1")
DEVELOPED PROJECTION AT .70 R

	R.F. Colla 4/4/79	COMPRESSOR WHEEL CASTING
SEE SHEET 1		26741 E 612E021
SEE SHEET 1		

2 1 SH. 3 of 3

801627

STATE POINTS	MEDIA	PRES. PSIA	TEMP °F	FLOW #/HR	FLOW GPM
1	H_2O	2.0	125	490	1
2	H_2O	20	125	490	1
3	H_2O	17.5	100	490	1
4	H_2O	15.0	274	490	1
5	H_2O	911	274	490	1
6	H_2O	872	607	490	1
7					
8	H_2O	815	1050	490	1
9	H_2O	75	658	450	
10	H_2O	67.5	1050	450	
11	H_2O	2.4	483	490	
12	H_2O	2.0	150	490	
13	$H_2O/O_2/$	2.0	125	3.0 CFM @ 70°F (Cap Free Dry Air)	
	$+H_2/Co$	2.0	125		
14	H_2O	25.0	50	882	1.8
15	H_2O	55.0	50	980	2
20	H_2O	-	56	-	250
24	H_2O	-	44	-	250
25	R-12	141	105	519.6	
26	R-12	43	30	519.6	
27	R-12	141	-	519.6	
28					
29					
30	LUBE OIL	14.7	155		15.0
31	LUBE OIL	65	155		15.0

STATE POINTS	MEDIA	PRES. PSIA	TEMP. °F	FLOW #/HR	FLOW GPM
32	LUBE OIL	45	135		15

STATE POINTS	MEDIA	PRES. PSIA	TEMP. °F	FLOW #/HR	FLOW GPM
72	H_2O	-	105.2		229
73	H_2O	-	110.0		229
74					
75					
76					
77					
78					
79					
80					
81	H_2O	-	78		310
82	H_2O	-	89.6		310
83	H_2O	-	92.7		310

NOTE: REFERENCE DRAWINGS 612E030 AND 612D031 FOR LOCATION OF STATE POINTS

REVISIONS	SIZE		REV.
	B	612B023	A

SYM.	DESCRIPTION	DATE	APPROVAL
A	GENERAL REVISION EXM	4/4/79	H. JONES

UNLESS OTHERWISE SPECIFIED DIMENSIONS ARE IN INCHES
TOLERANCES ON:
DECIMALS .XXX ± .XX ± FRACTIONS ± ANGLES ±
ALL SURFACES ✓
BREAK SHARP CORNERS AND REMOVE BURRS

MATERIAL

TREATMENT

DRAWN H. JONES 3/1/79
CHECK
DESIGN
ANALYTICAL
MATERIALS
MFG. ENGR.
PROJ. ENGR.
QUALITY CONTROL

Mechanical Technology Incorporated
Latham, New York

TITLE CNG SCHEMATIC STATE POINTS

CODE IDENT NO. 26741 | SIZE B | 612B023

ISSUED | SCALE | WT. | ACT. CALC.

MECHANICAL TECHNOLOGY INCORPORATED

BRUNING 40 105 22145-6

801628

MECHANICAL TECHNOLOGY INCORPORATED

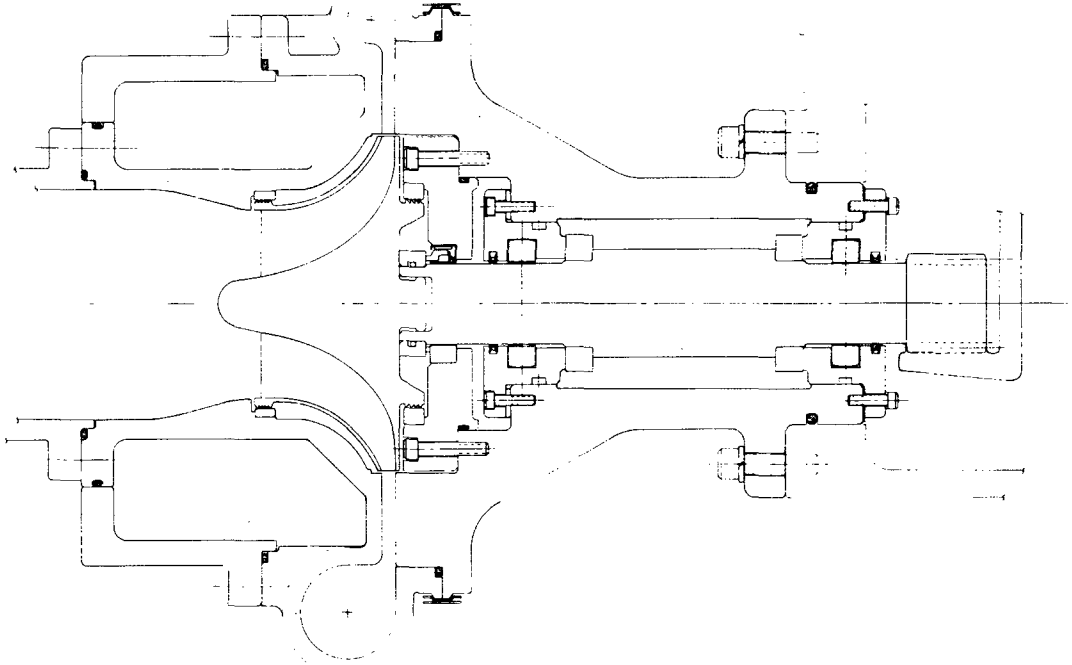

REVISIONS	SIZE D	612D024	REV
SYM.	DESCRIPTION	DATE	APPROVAL

UNLESS OTHERWISE SPECIFIED DIMENSIONS ARE IN INCHES
TOLERANCES ARE
DECIMALS ± FRACTIONS ± ANGLES ±
.XXX ± .X ± ±
.XX ± ALL SURFACES √
BREAK SHARP CORNERS
AND REMOVE BURRS
MATERIAL
TREATMENT

DRAWN E. WINESTLER 1/1/79
CHECKED
ENGRD
APPL/PROJ.
SUPERVISOR
MFG. ENGR.
PROJ. ENGR.
REVIEW ENGINEER

Mechanical Technology Incorporated
Latham, New York

TITLE LAYOUT ~ CNG COMPRESSOR MODULE #1
CNG TURBOMACHINERY

CODE IDENT NO. 26741 | SIZE D | 612D024

SCALE FULL | SHT OF

792865

F-8

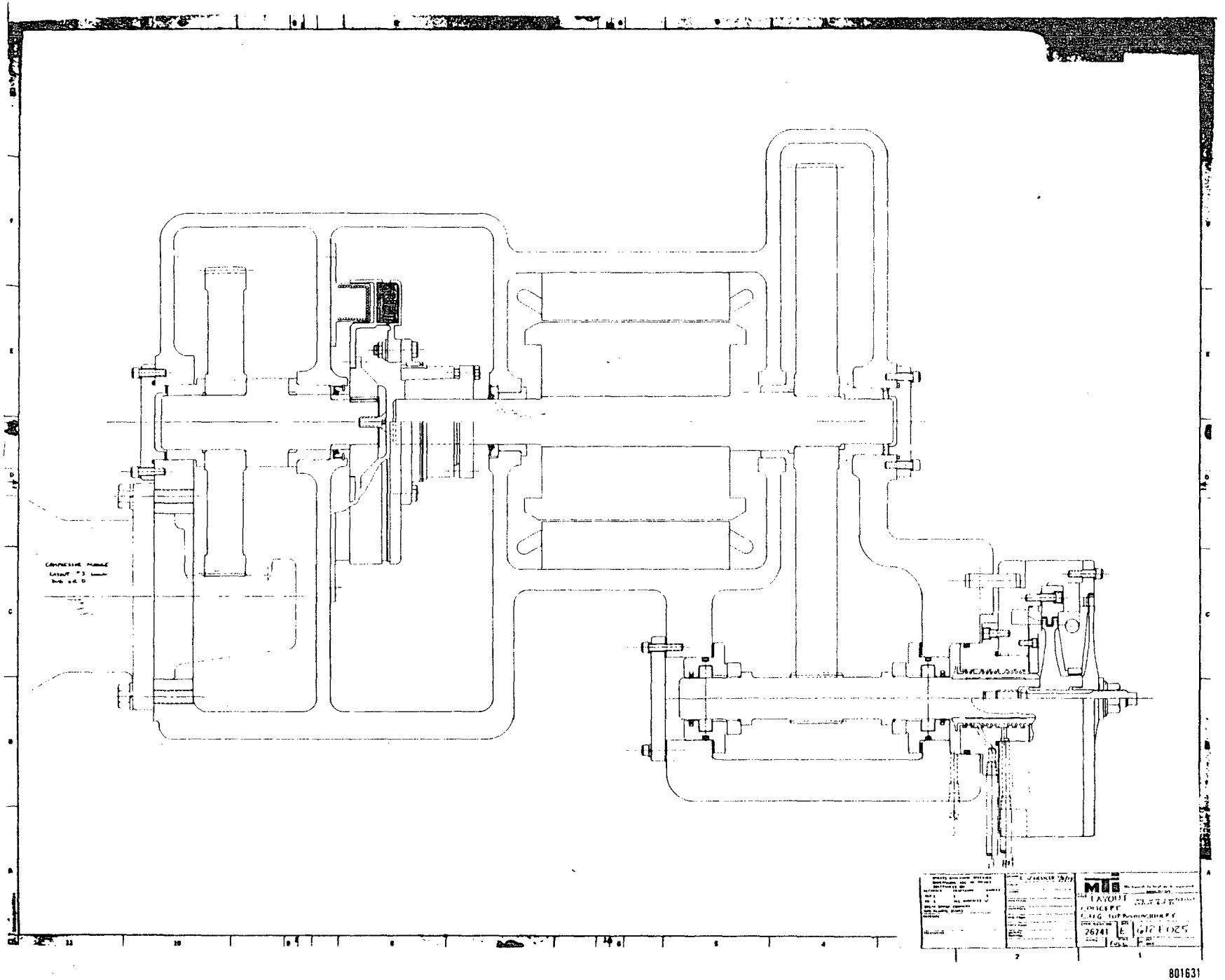
MECHANICAL
TECHNOLOGY
INCORPORATED
LAYOUT
26741
801631

MECHANICAL TECHNOLOGY INCORPORATED

F-10

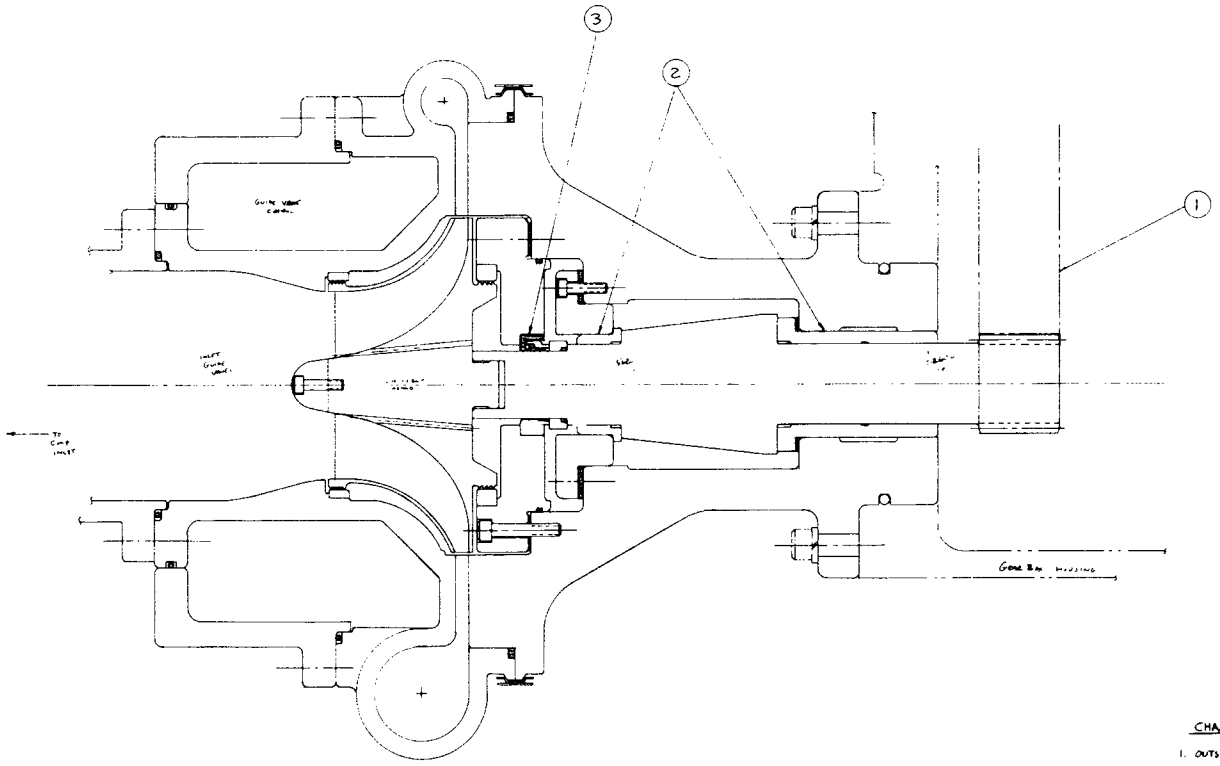

REVISIONS					D	612D026	REV
DATE	DESCRIPTION			DATE	APPROVAL		

CHANGES FROM MODULE #1

1. OUTSIDE DRIVING GEAR
2. JOURNAL BEARINGS
3. REVERSED FACE SEAL
4. 5" BRG. CENTERS

UNLESS OTHERWISE SPECIFIED DIMENSIONS ARE IN INCHES TOLERANCES ON DECIMALS FRACTIONS ANGLES .XXX ± ± ± .XX ± ALL SURFACES √ SHARP CORNERS AND BURRS REMOVED	DRAWN E. WHETTLER 3/21/79 CHECK ENGINEER ANALYSIS MATERIALS APPR. DRAW. PROJ. ENGR. QUALITY CONTROL	Mechanical Technology Incorporated Latham, New York TITLE LAYOUT ~ CNG COMPRESSOR MODULE #2 CNG TURBOMACHINERY
MATERIAL TREATMENT		CODE IDENT NO. 26741 SIZE D 612D026 SCALE FULL

792869

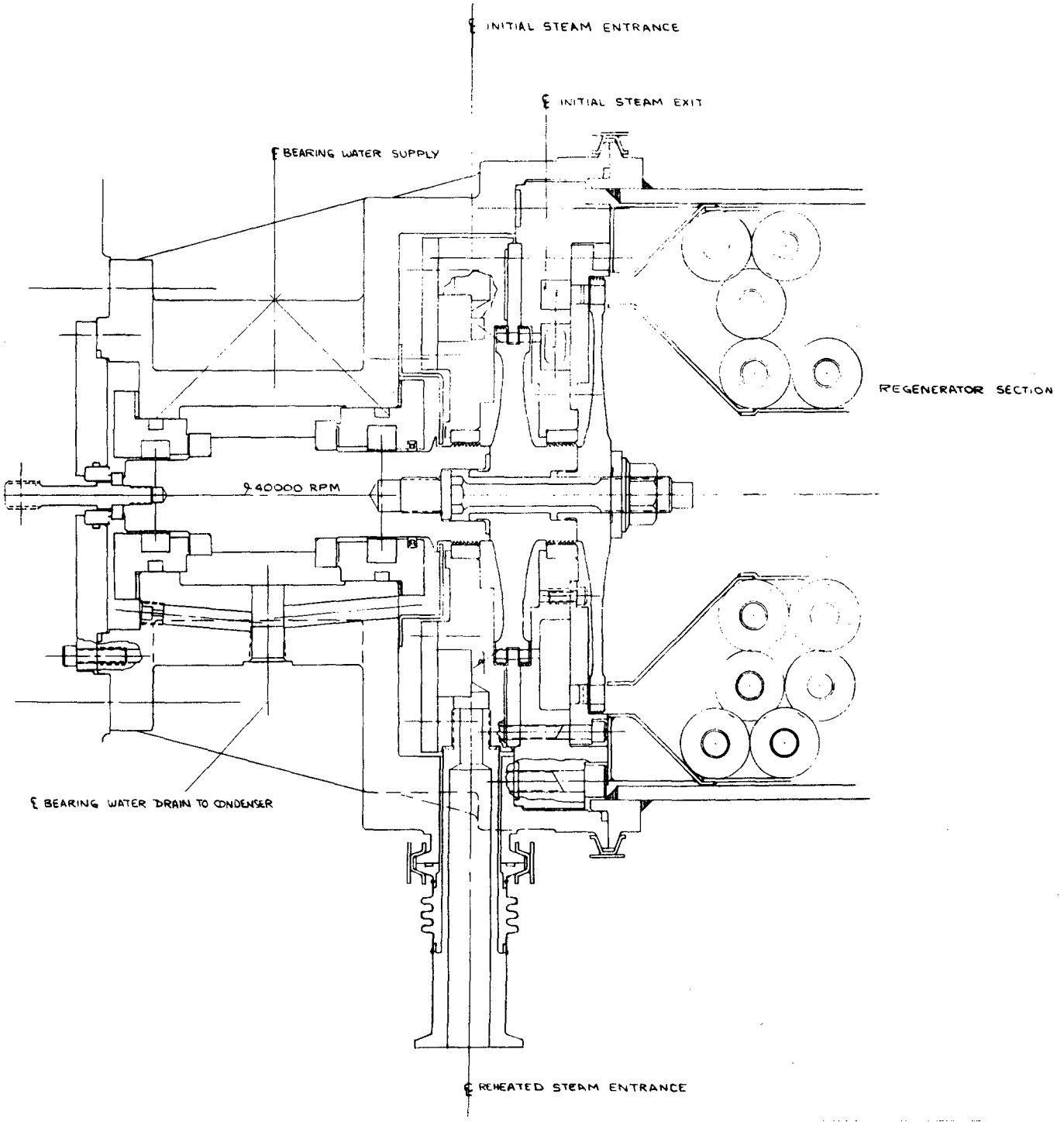

UNLESS OTHERWISE SPECIFIED DIMENSIONS ARE IN INCHES TOLERANCES ON: DECIMALS .XX ± .XX ± FRACTIONS ± ANGLES ± ALL SURFACES √ BREAK SHARP CORNERS AND REMOVE BURRS MATERIAL FINISH WEIGHT	DRAWN A.CELLA 3/15/79 CHECK ENGRG ANALYTICAL MATERIALS APPR. ENGR. FINAL ENGR. QUALITY CONTROL	Mechanical Technology Incorporated TITLE CNG TURBINE MODULE CODE IDENT NO. 26741 SIZE E DWG NO. 612-E-028 SCALE NONE SHT. OF

MECHANICAL TECHNOLOGY INCORPORATED

792871

MECHANICAL TECHNOLOGY INCORPORATED

F-12

REVISIONS		SIZE D	612 D029	REV A
SYM.	DESCRIPTION	DATE	APPROVAL	
A	BLADE WIDTH & PROFILE CHANGED .250 WAS .170 PLATE WIDTH .270 WAS .220. 122 BLADES WAS 180			

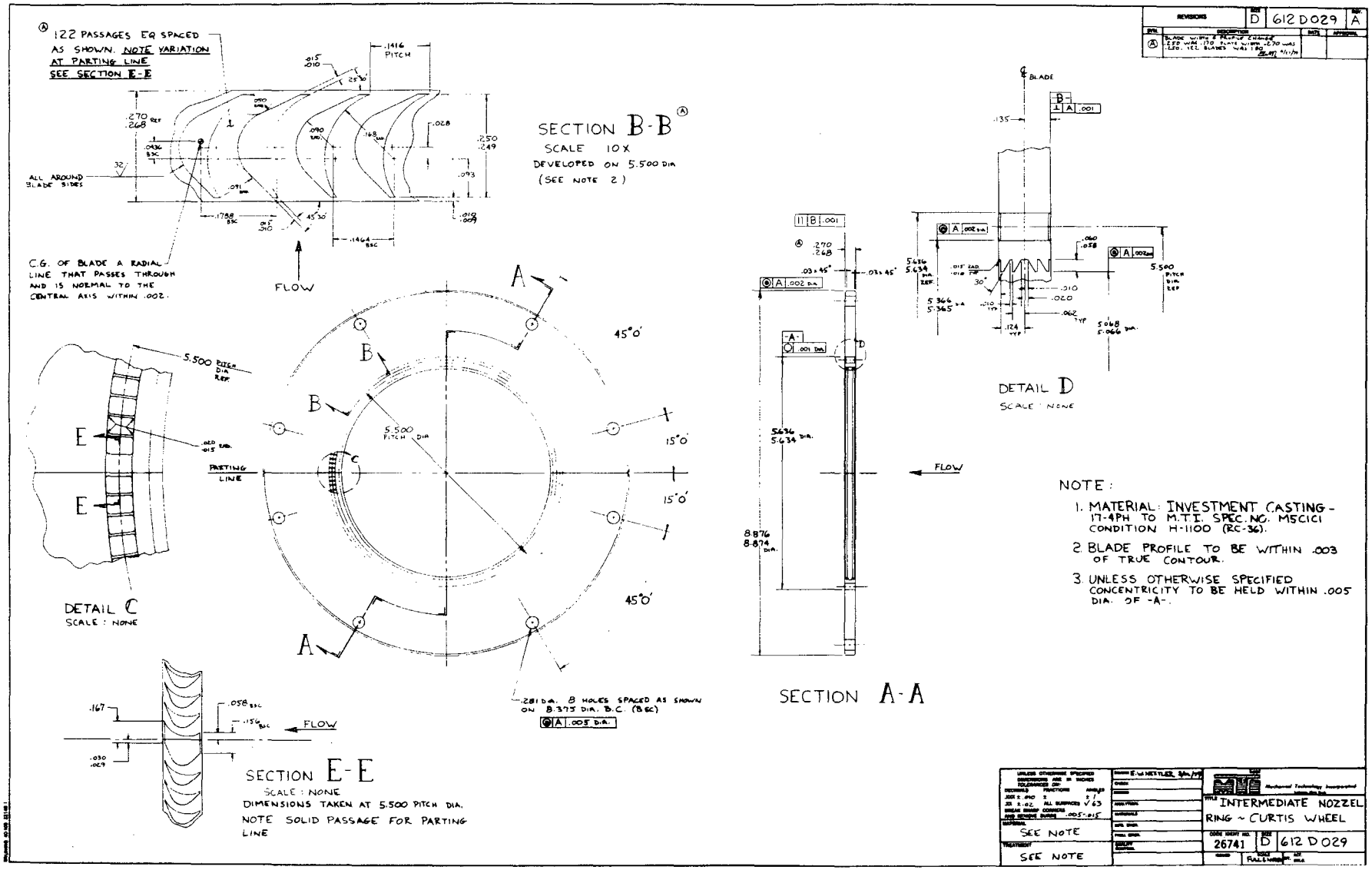

792870

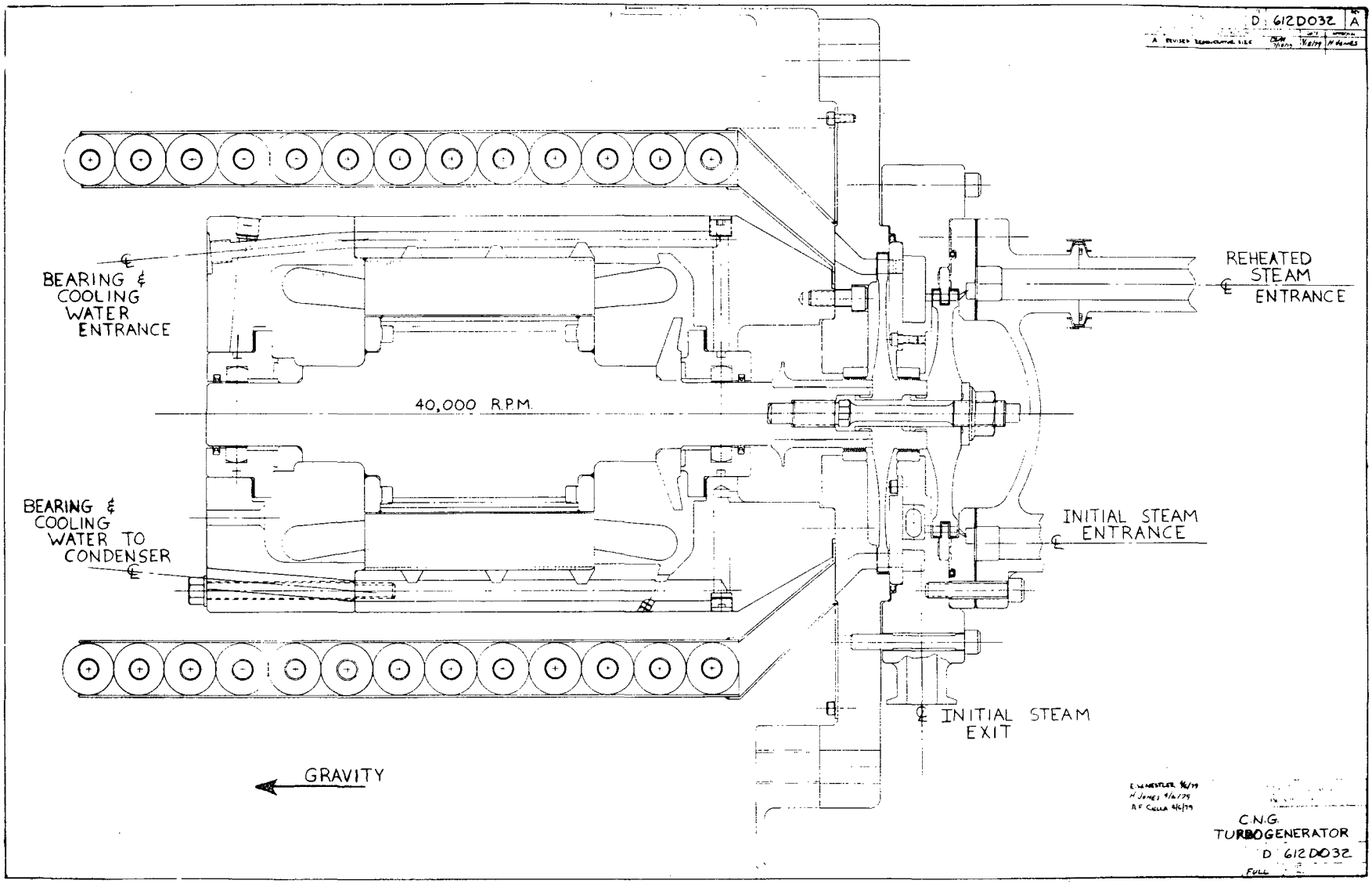

MECHANICAL TECHNOLOGY INCORPORATED

792866

MECHANICAL TECHNOLOGY INCORPORATED

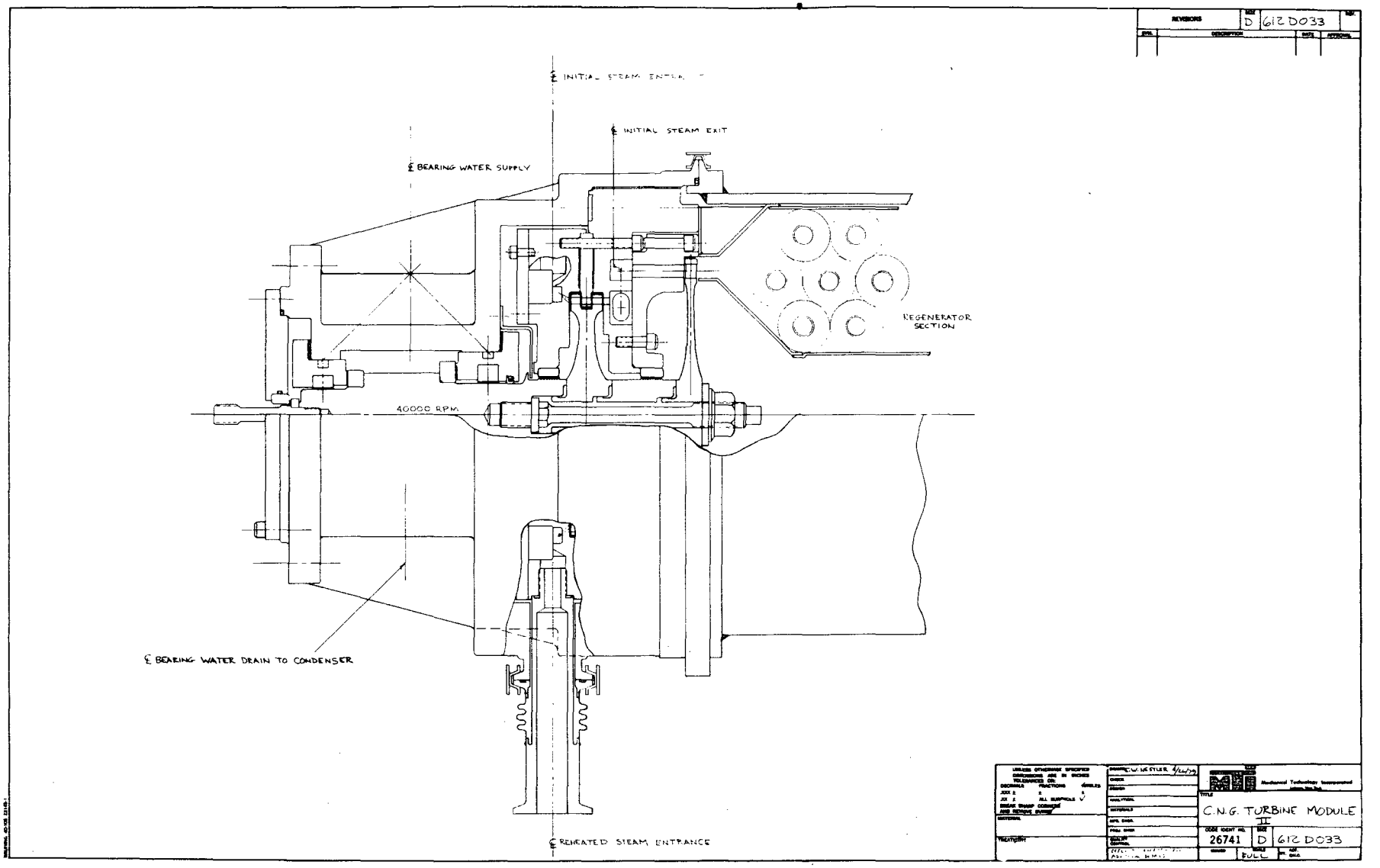

F-14

792868

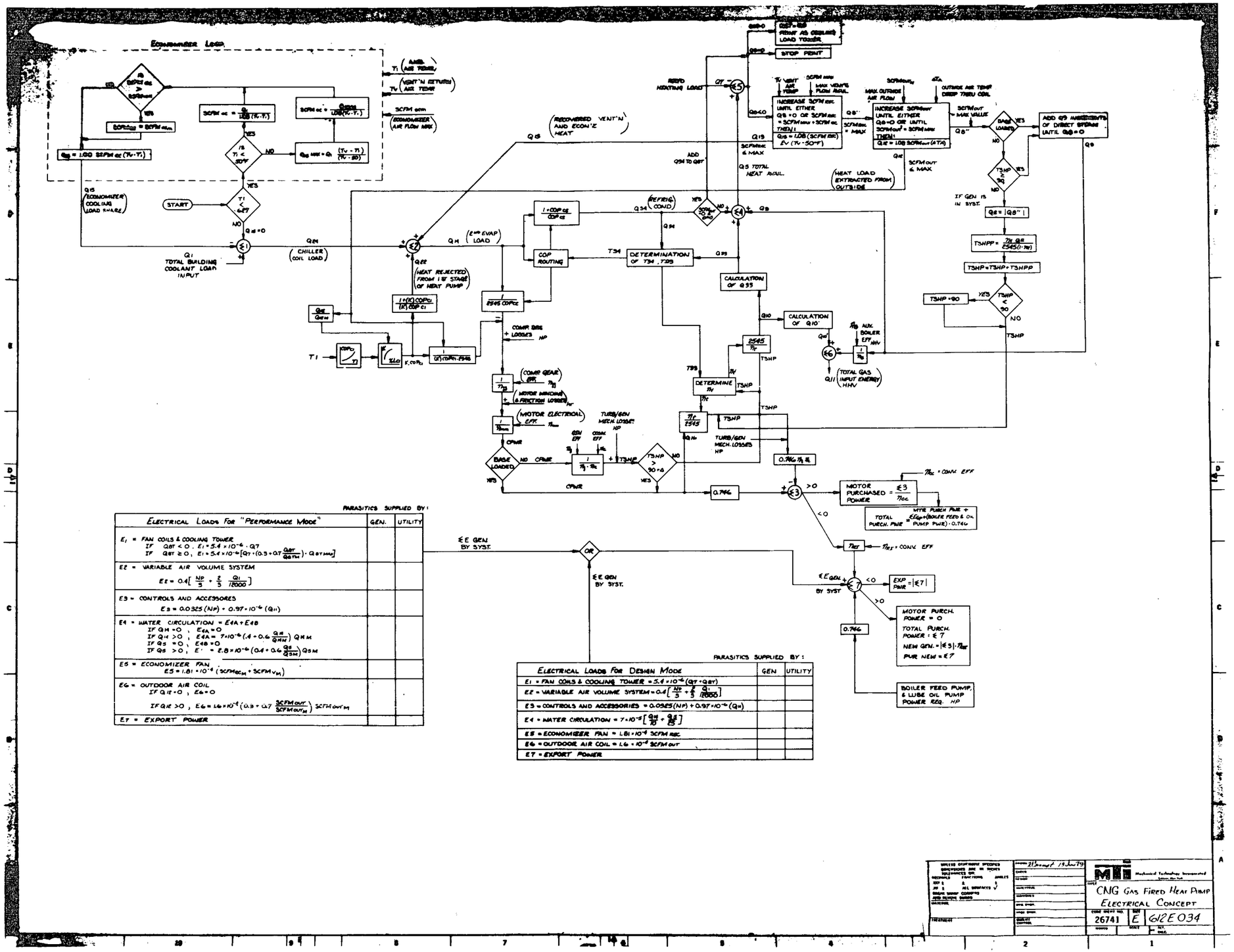
ECONOMIZER LOOP
START
Q1 TOTAL BUILDING COOLANT LOAD INPUT
Q15 (ECONOMIZER COOLING LOAD SHARE)
Q24 (CHILLER COIL LOAD)
Q22 (HEAT REJECTED FROM 1 ST STAGE OF HEAT PUMP)
(RECOVERED VENT'N AND ECON'Z HEAT)
Q5 TOTAL HEAT RQUL.
(HEAT LOAD EXTRACTED FROM OUTSIDE)
COP ROUTING
DETERMINATION OF T34, T35
CALCULATION OF Q35
CALCULATION OF Q10'
DETERMINE η
BASE LOADED
MOTOR ELECTRICAL EFF.
(COMPR GEAR EFF.)
(MOTOR WINDING & FRICTION LOSSES)
TURB/GEN MECH. LOSSES HP
MOTOR PURCHASED POWER = ε3 / η_cc
η_cc = COMB. EFF
TOTAL PURCH. PWR = MTR PURCH PWR + (BOILER FEED & OIL PUMP PWR) · 0.746
η_ref = CONV. EFF
EXP PWR = |ε7|
MOTOR PURCH. POWER = 0
TOTAL PURCH. POWER = ε7
NEW GEN. = |ε3| · η_cc
PWR NEW = ε7
BOILER FEED PUMP, & LUBE OIL PUMP POWER REQ. HP
ADD Q29 INCREMENTS OF DIRECT EVAPORATOR UNTIL Q28 = 0
IF GEN IS IN SYST.
TSHPP = η_t Q8 / 2545(1-η_t)
TSHP = TSHP + TSHPP
TSHP = 90
NO
TSHP
PARASITICS SUPPLIED BY:
ε E GEN BY SYST.
OR
ε E GEN BY SYST.
ε E_GEN BY SYST
0.746
ELECTRICAL LOADS FOR "PERFORMANCE MODE"
GEN.
UTILITY
E1 = FAN COILS & COOLING TOWER
IF Q8T < 0, E1 = 5.4 × 10^-6 · Q7
IF Q8T ≥ 0, E1 = 5.4 × 10^-6 [Q7 + (0.3 + 0.7 Q8T/Q8TM) · Q8TMM]
E2 = VARIABLE AIR VOLUME SYSTEM
E2 = 0.4 [Np/3 + 2/3 Q1/12000]
E3 = CONTROLS AND ACCESSORIES
E3 = 0.0325 (Np) + 0.97 × 10^-6 (Q11)
E4 = WATER CIRCULATION = E4A + E4B
IF Q14 = 0, E4A = 0
IF Q14 > 0, E4A = 7 × 10^-6 (.4 + 0.6 Q14/Q14M) Q14M
IF Q5 = 0, E4B = 0
IF Q5 > 0, E' = 2.8 × 10^-6 (0.4 + 0.6 Q5/Q5M) Q5M
E5 = ECONOMIZER FAN
E5 = 1.81 × 10^-6 (SCFM_ECM + SCFM_VM)
E6 = OUTDOOR AIR COIL
IF Q12 = 0, E6 = 0
IF Q12 > 0, E6 = 1.6 × 10^-6 (0.3 + 0.7 SCFM_OUT/SCFM_OUTM) SCFM_OUTM
E7 = EXPORT POWER
ELECTRICAL LOADS FOR DESIGN MODE
GEN
UTILITY
E1 = FAN COILS & COOLING TOWER = 5.4 × 10^-6 (Q7 + Q8T)
E2 = VARIABLE AIR VOLUME SYSTEM = 0.4 [Np/3 + 2/3 Q1/12000]
E3 = CONTROLS AND ACCESSORIES = 0.0325 (Np) + 0.97 × 10^-6 (Q11)
E4 = WATER CIRCULATION = 7 × 10^-6 [Q14/10 + Q5/25]
E5 = ECONOMIZER FAN = 1.81 × 10^-6 SCFM REC.
E6 = OUTDOOR AIR COIL = 1.6 × 10^-6 SCFM OUT
E7 = EXPORT POWER
MTI
Mechanical Technology Incorporated
CNG GAS FIRED HEAT PUMP
ELECTRICAL CONCEPT
26741
E
612E034

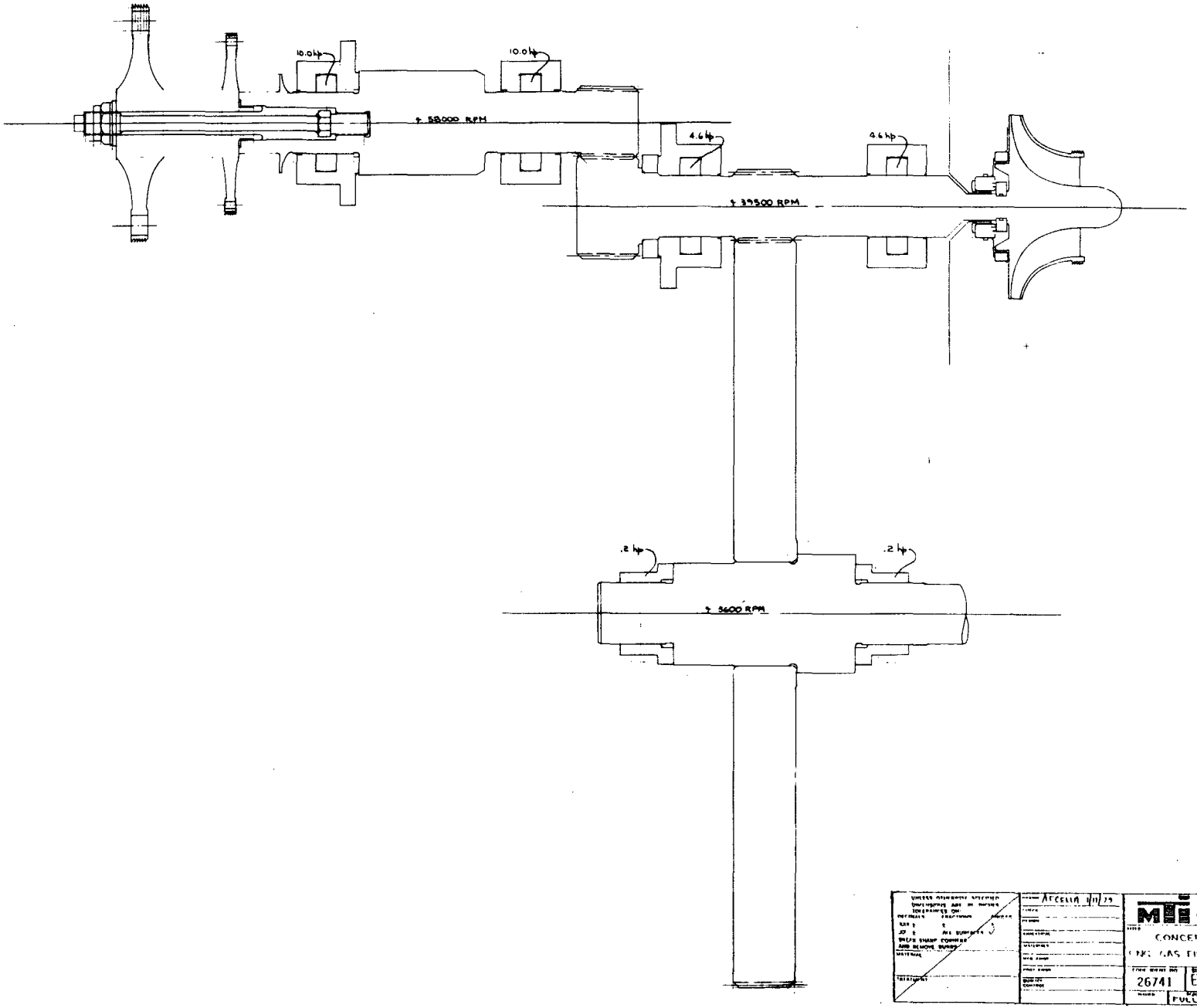

801630

MECHANICAL TECHNOLOGY INCORPORATED

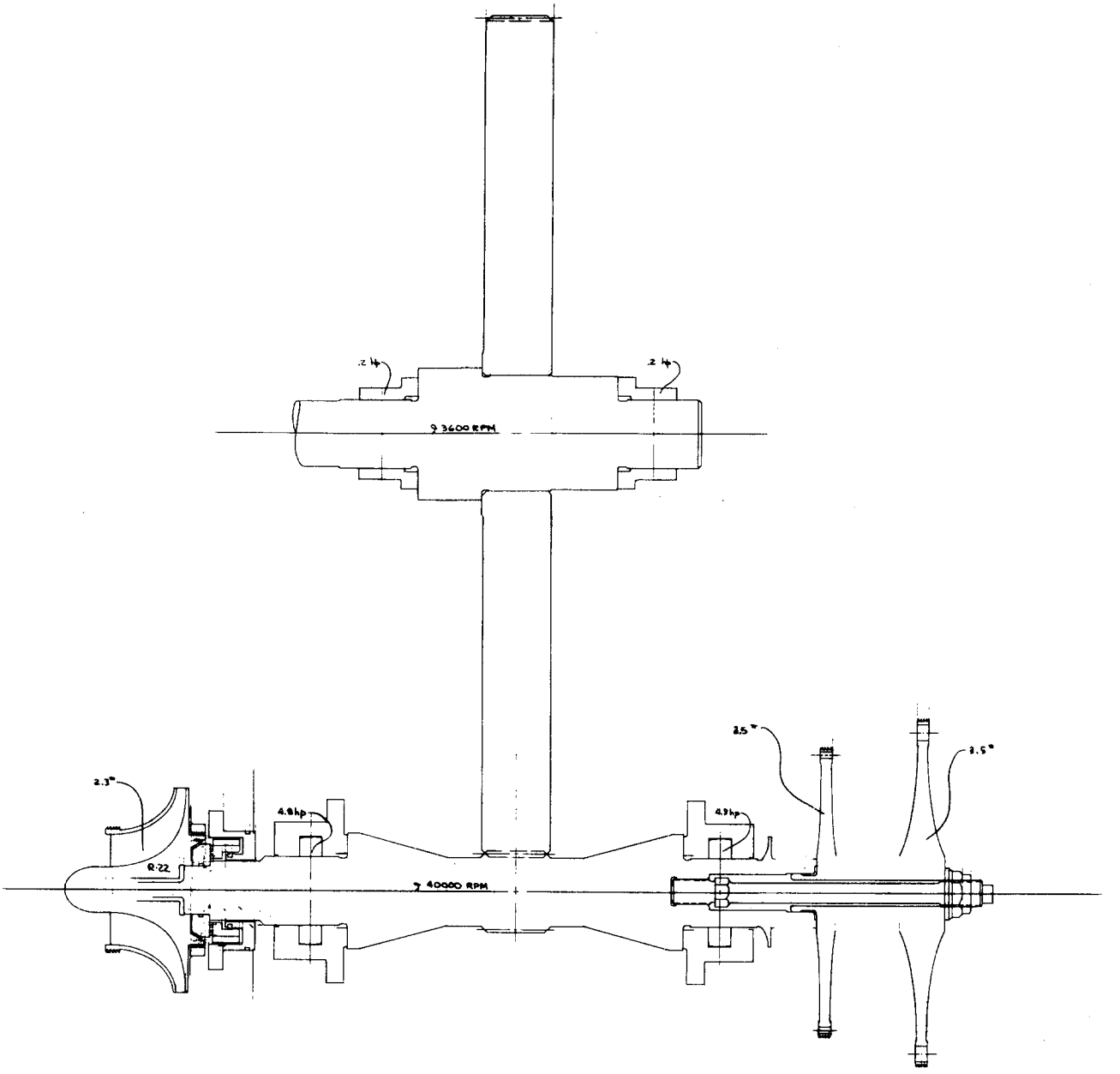

UNLESS OTHERWISE SPECIFIED DIMENSIONS ARE IN INCHES TOLERANCES ON DECIMALS ±.01 .XX ± .005 .XXX ± .0005 ANGLES ± 1° FRACTIONS ± 1/64 ALL SURFACES √ BREAK SHARP CORNERS AND REMOVE BURRS	AE CELLA 1/11/79	Mechanical Technology Incorporated Latham, New York
MATERIAL		TITLE CONCEPT VII CNG GAS FIRED HEAT PUMP
TREATMENT		26741 E SK-E-5652
		FULL

801629

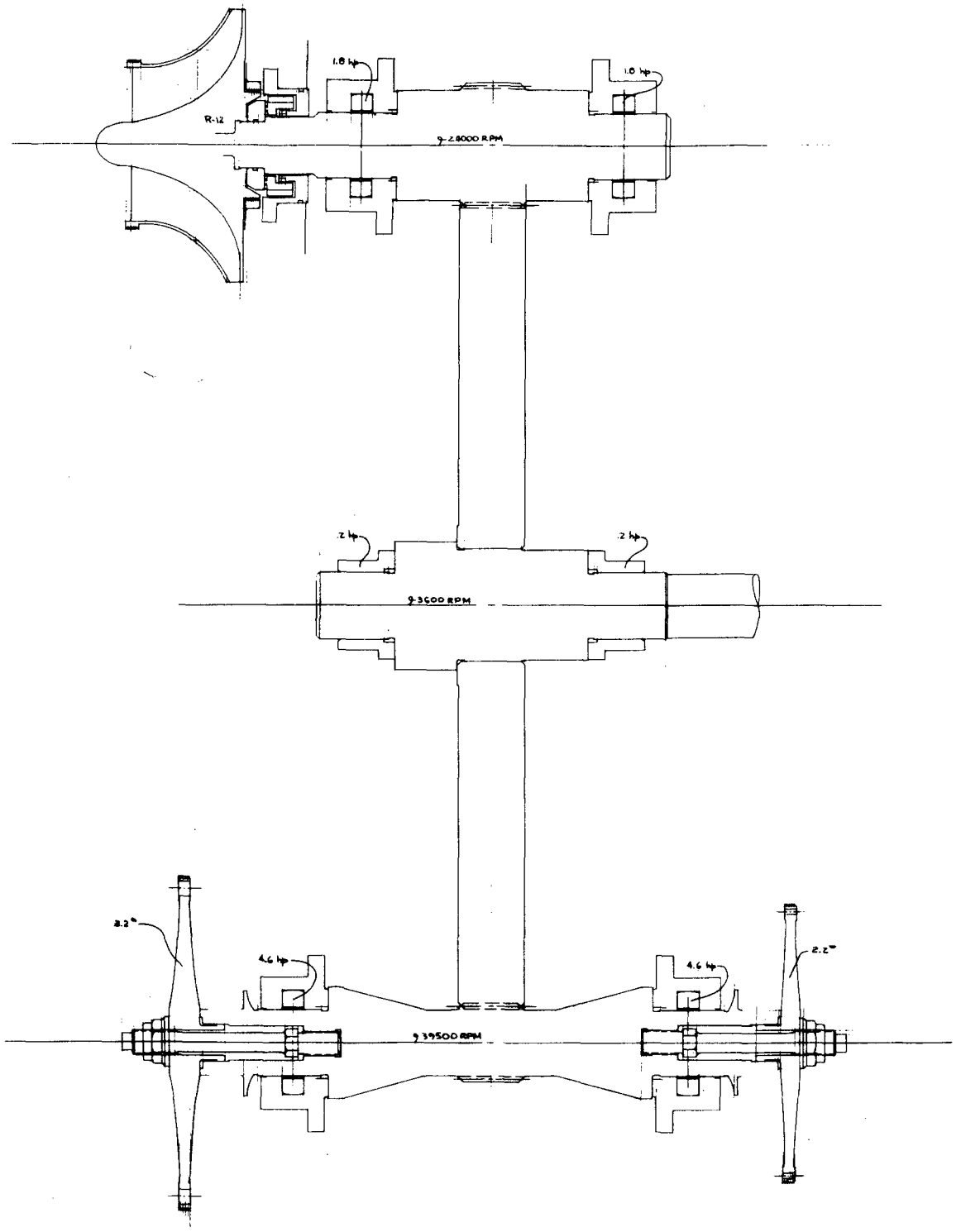

UNLESS OTHERWISE SPECIFIED DIMENSIONS ARE IN INCHES TOLERANCES ON: DECIMALS .XX ± .XXX ± ANGLES ± BREAK SHARP CORNERS AND REMOVE BURRS	DRAWN A. FECELLA 1/10/79	MTI Mechanical Technology Incorporated
	CHECK	TITLE CONCEPT XIII CNG GAS FIRED HEAT PUMP
	REVISED	
	APPROVED	
MATERIAL		
TREATMENT		CODE IDENT NO. 26741 SIZE E SK-E-5654
		SCALE FULL SHT. OF

801632

MECHANICAL TECHNOLOGY INCORPORATED

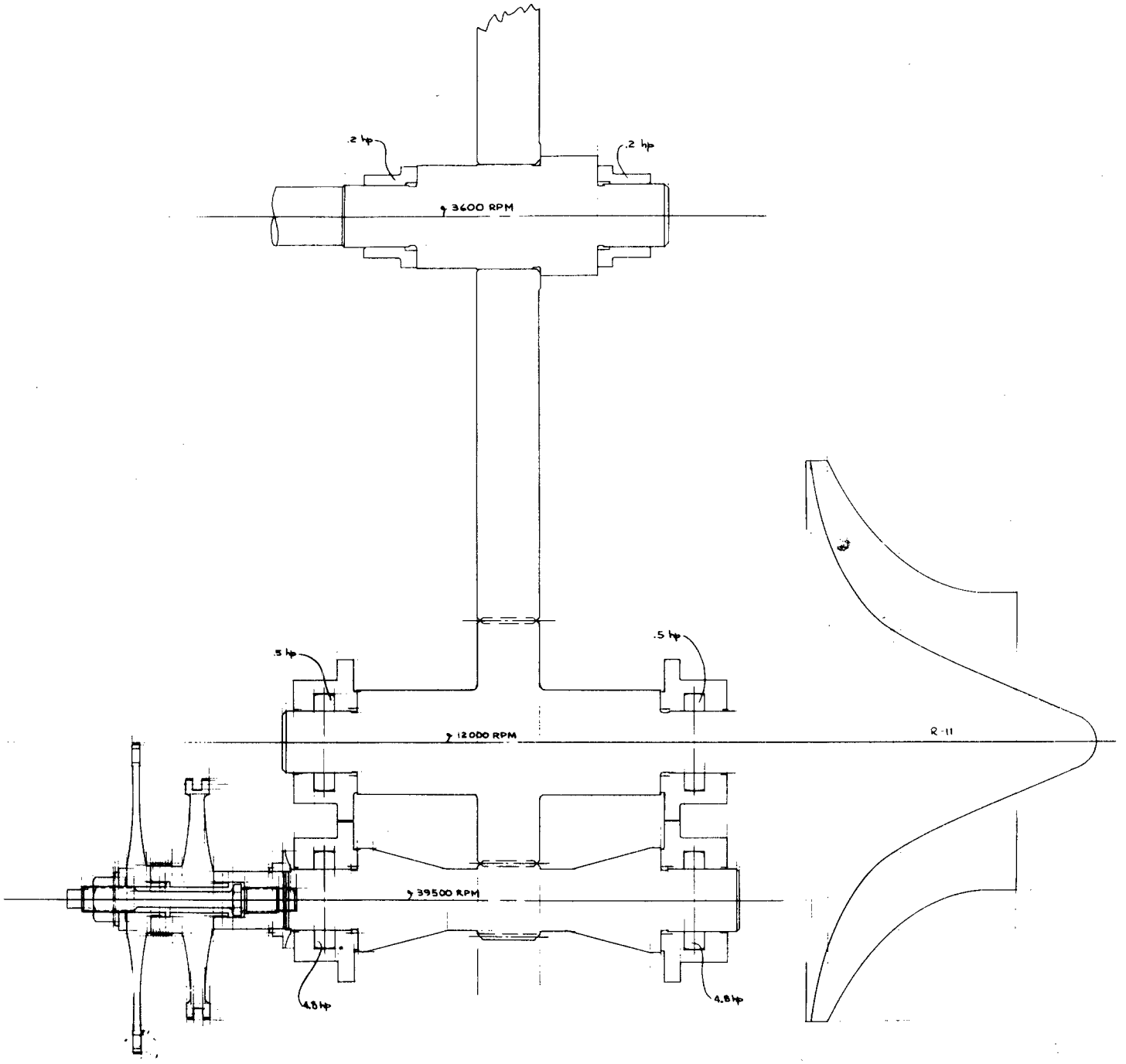

CONCEPT
CNG GAS FIRED HEAT PUMP
26743
SKD 5660

801633

MECHANICAL TECHNOLOGY INCORPORATED

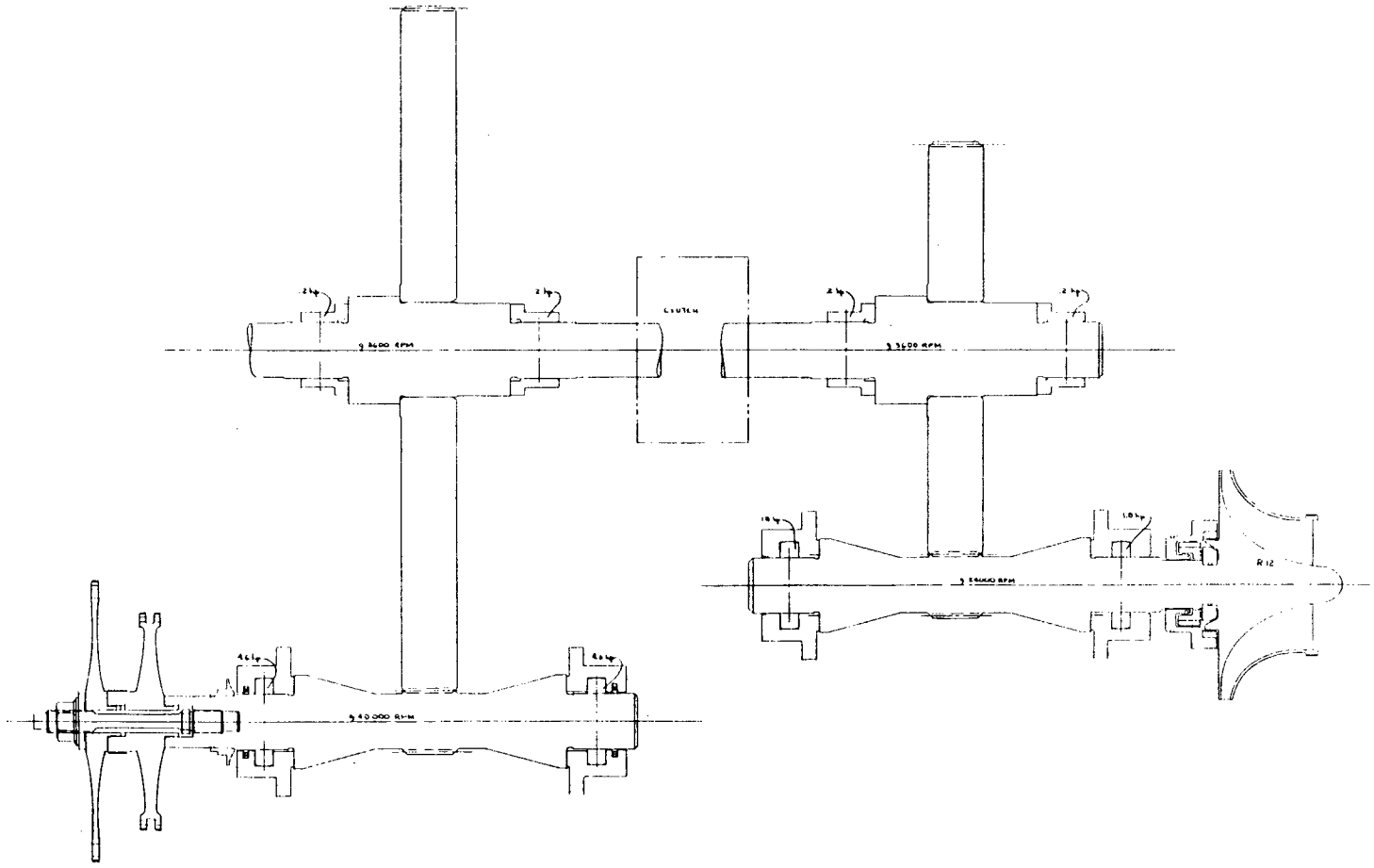

A. F. CELLAZZOTTI	Mechanical Technology Incorporated	
	CONCEPT XI CNG GAS FIRED HEAT PUMP	
	26741	E	SKE-5666
	FINAL	

MECHANICAL TECHNOLOGY INCORPORATED

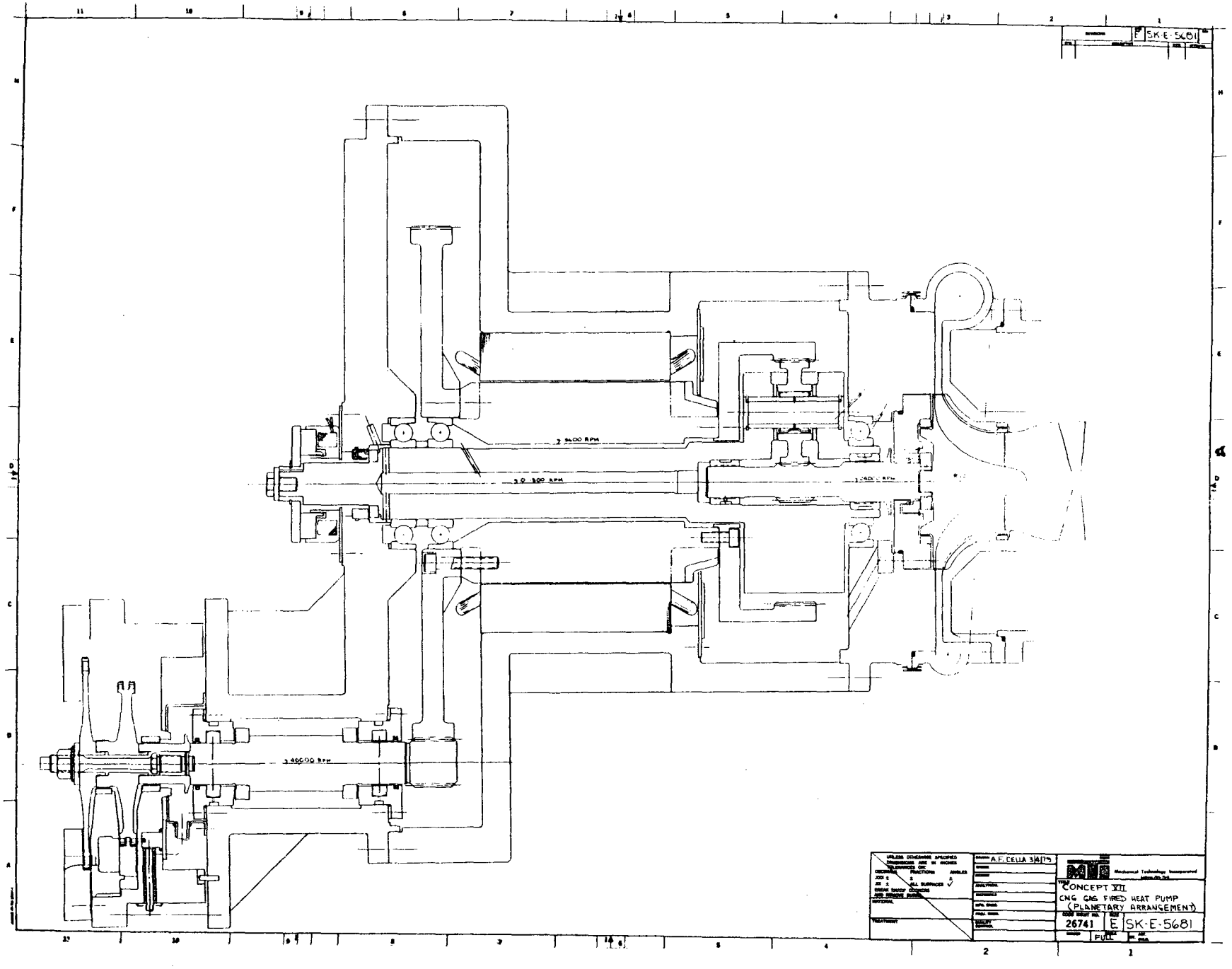

MECHANICAL TECHNOLOGY INCORPORATED

801635

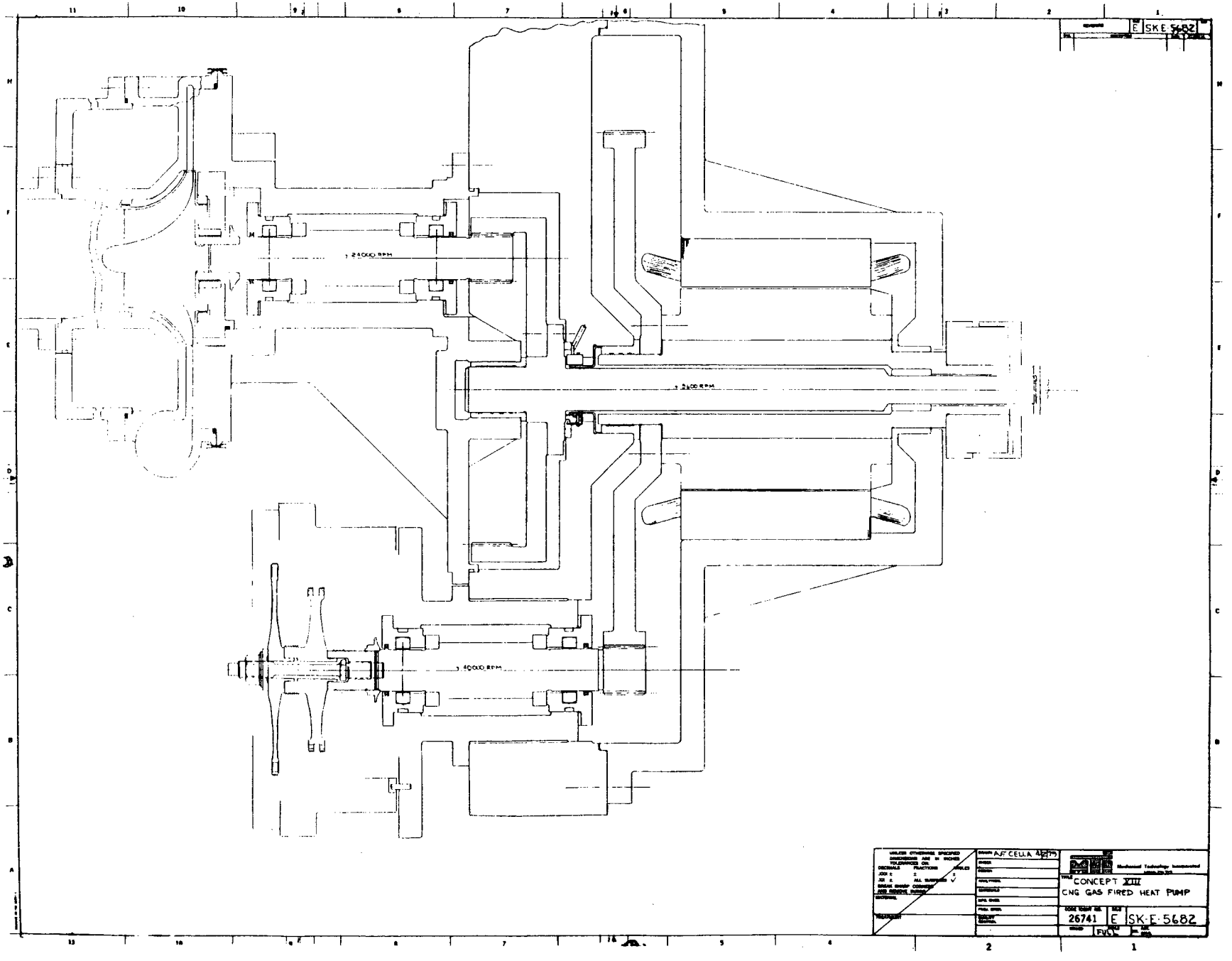

MECHANICAL TECHNOLOGY INCORPORATED

801636

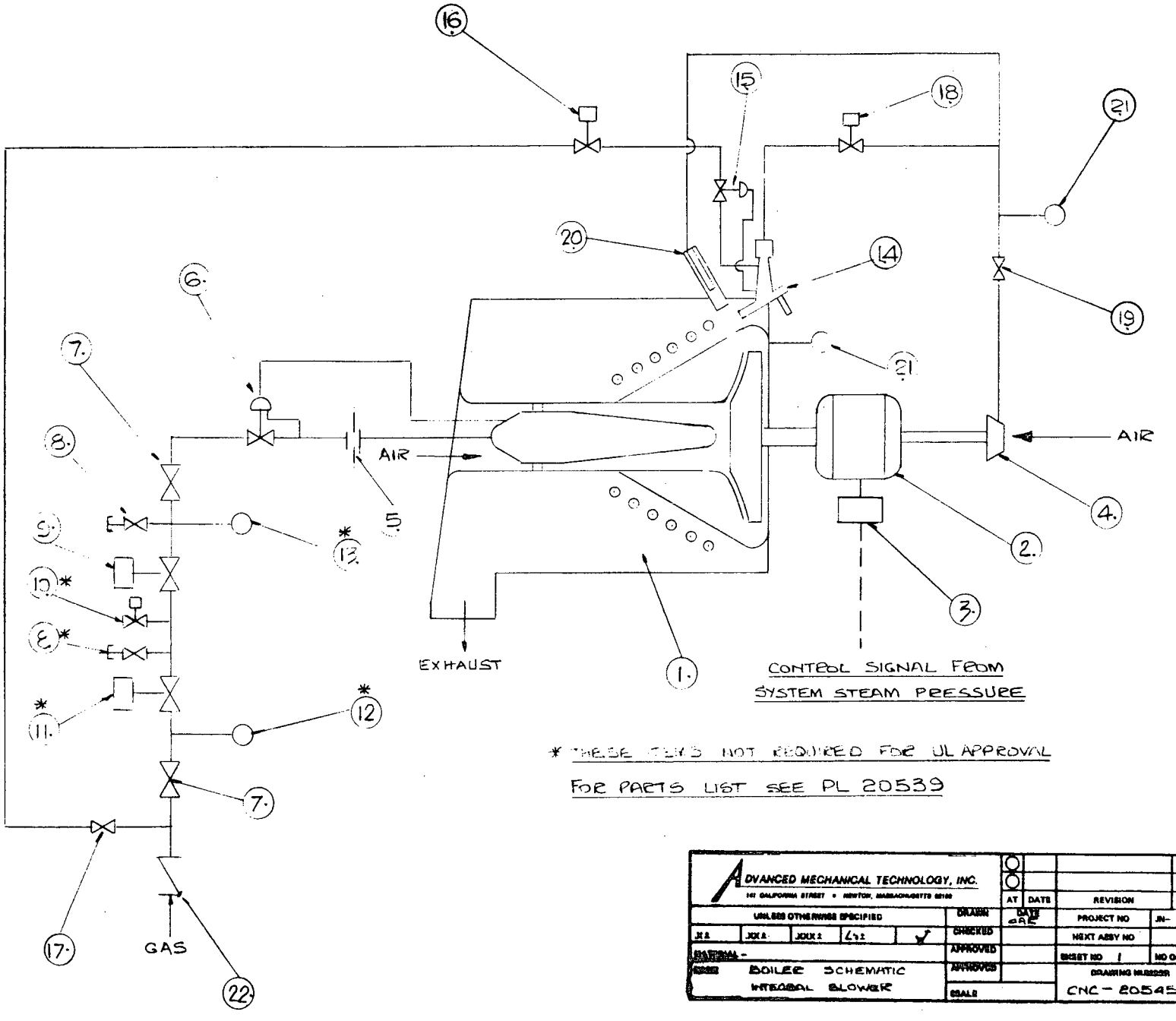

* THESE ITEMS NOT REQUIRED FOR UL APPROVAL

FOR PARTS LIST SEE PL 20539

ADVANCED MECHANICAL TECHNOLOGY, INC. 141 CALIFORNIA STREET • NEWTON, MASSACHUSETTS 02160		AT	DATE	REVISION	ECN	APPD
UNLESS OTHERWISE SPECIFIED	DRAWN	DATE 6-82		PROJECT NO	JN- 2050	
.XX .XXX .XXXX ± 4 ±	CHECKED			NEXT ASSY NO		
MATERIAL –	APPROVED			SHEET NO 1	NO OF SHEETS 1	
BOILER SCHEMATIC INTEGRAL BLOWER	APPROVED			DRAWING NUMBER CNC – 20545		REV
	SCALE					

801634

MECHANICAL TECHNOLOGY INCORPORATED