FINAL REPORT

A HIGH SEASONAL PERFORMANCE FACTOR GAS HEAT PUMP FOR THE NORTH CENTRAL UNITED STATES

APPENDIX VOLUME IV

SYSTEM COST ANALYSIS

Prepared By: Mechanical Technology Inc.
Prepared For: Consolidated Natural Gas Service Company Inc.
And The U.S. Department of Energy
Prepared Under: DOE Prime Contract EY-76-C-02-2883

January, 1980

Consolidated Natural Gas Service Company Inc.

Mechanical Technology Inc.

MTI 79TR68

FINAL REPORT

A HIGH SEASONAL PERFORMANCE FACTOR GAS HEAT PUMP FOR THE NORTH CENTRAL UNITED STATES

Appendix Volume IV

SYSTEM COST ANALYSIS

Prepared By: Mechanical Technology Incorporated
968 Albany-Shaker Road
Latham, New York 12110

Prepared For: Consolidated Natural Gas Service Company Inc.
Research Department
11001 Cedar Avenue
Cleveland, Ohio 44106

And

The U.S. Department of Energy
Consumer Products Division
Technology & Consumer Products Branch
20 Massachusetts Avenue
Washington, D.C. 20545

Prepared Under: DOE Prime Contract EY-76-C-02-2883

January, 1980

NOTICE

This report was prepared as an account of work sponsored by the United States Government and Consolidated Natural Gas Service Company Inc. Neither the United States nor the United States Department of Energy, nor Consolidated Natural Gas Service Company Inc., nor any of their employees, nor any of their subcontractors, or their employees, makes any warranty, express or implied, or assumes any legal liability or responsibility for the accuracy, completeness or usefulness of any information, apparatus, product or process disclosed, or represents that its use would not infringe privately-owned rights. Mention of commercial products, their manufacturers, or their suppliers in this publication does not imply or connote approval or disapproval of the product by the U.S. Department of Energy or Consolidated Natural Gas Service Company Inc.

Appendices to Final Report

DEMONSTRATION OF A HIGH SPF GAS HEAT PUMP
FOR THE NORTH CENTRAL UNITED STATES

Table of Contents

Appendix Volume	Title
I	7-1/2 Ton Technical Demonstration
II	7-1/2 Ton Market Potential Study
III	7-1/2 Ton Comparative Cost of Ownership Study
IV*	System Cost Analysis
V	Large Size Model Technical Effort
VI	Large Size Model Market Potential Study
VII	Large Size Model Comparative Cost of Ownership Study
VIII	Business Potential Study

*Contained herein.

APPENDIX VOLUME IV

TABLE OF CONTENTS

Section		Page
	LIST OF FIGURES	iv
	LIST OF TABLES	v
1.0	INTRODUCTION	1-1
	1.1 Purpose of Costing Effort	1-1
	1.2 Anticipated Uses of Costing Effort Results	1-1
	1.3 Program Background: 7-1/2 Tons to 125 Tons	1-2
2.0	COSTING METHODOLOGY	2-1
	2.1 Overview of Costing Methodology	2-1
	2.2 Preliminary Cost - 125-Ton System	2-6
	2.3 Interim Cost - 125-Ton System	2-12
	2.4 Final System Cost	2-13
	2.5 Costing of Alternate Commercially Available Heating and Cooling Systems	2-13
3.0	SUMMARY OF RESULTS	3-1
	3.1 7-1/2-Ton Gas-Fired Heat Pump	3-1
	3.2 125-Ton Gas-Fired Heat Pump	3-3
	3.3 Competative Equipment	3-6
ATTACHMENT A	- Supplementary Information for the 7-1/2-Ton System Costing	A-1
ATTACHMENT B	- Supplementary Information for the 125-Ton System Costing	B-1

LIST OF FIGURES

Number		Page
2-1	Product Costing Plan - Preliminary Estimate.	2-2
2-2	Product Costing Plan - Interim Iteration	2-3
2-3	Product Costing Plan - Final Iteration	2-4
2-4	Schedule of Major Tasks for the 125-Ton Costing Effort . .	2-5
2-5	Breakdown of System for Costing.	2-7

LIST OF TABLES

Number		Page
2-1	CNG/HSPF LSM System Cost Component List	2-8
3-1	7-1/2-Ton Manufacturing Preliminary Cost - Basic Assumptions	3-2
3-2	7-1/2-Ton Manufacturing "Final" Cost - Alternate Assumptions	3-4
3-3	Interim Product Costing for LSM Turbochiller Package . . .	3-5
3-4	LSM System Product Costing Comparison.	3-7
A-1	Preliminary Summary Tabulation 7-1/2-Ton Cost - Basic Assumptions	A-3
A-2	Turbomachine Costs	A-4

1.0 INTRODUCTION

1.1 Purpose of Costing Effort

The objective of this study was to develop component and system cost for the Department of Energy (DOE)/Consolidated Natural Gas Service Company, Inc. (CNG)/Mechanical Technology Incorporated (MTI) 7-1/2-ton* and 125-ton** gas-fired heat pumps. This report will describe the individual tasks that constituted this heat pump system costing study, their timing and interaction with the parallel design, market study and business venture analysis efforts, and the results of this costing study for both the 7-1/2-ton and 125-ton heat pumps.

1.2 Anticipated Uses of Costing Effort Results

The cost of this system was expected to be greater than the cost of a standard competitive system that could perform the same services of heating and cooling. Every effort was made to minimize the difference between the cost of the heat pumps developed in this program, and their competition. By providing design engineers with cost information on the individual heat pump components as it became available, the design engineers were able to alter their designs for the higher priced components before arriving at a final system design. In this way, it was hoped that the cost differential between the heat pumps and their competition would be minimized.

Several other efforts were conducted parallel to this costing effort. Among them were the system engineering design work, referred to above, a business venture analysis, and a comparative cost of ownership study. Both the business venture analysis and the comparative cost of ownership study required the cost of the heat pump as inputs. Therefore, it was essential that the results of each phase of this costing study be accurate and available on a timely basis. Both of these requirements were met.

---

* Object of the 7-1/2 ton program

**Object of the 120/125 ton large size model (LSM) program

1.3 Program Background: 7-1/2 Tons to 125 Tons

The objective of the CNG/DOE/MTI heat pump program was to develop a commercially viable, energy-conserving gas-fired heat pump. This heat pump was to utilize a steam Rankine power cycle to drive an organic Rankine refrigeration cycle. Technical progress on the 7-1/2-ton system was well under way before the initiation of the product costing subelement of that program. The advanced state of technical development generated large amounts of hardware design data which helped to facilitate the costing of the 7-1/2-ton system. At the completion of that costing study, it was concluded that the 7-1/2-ton size system would cost approximately 150% more than the product presently on the market providing the same services of heating and cooling. The market study (see Volume II) that characterized the market for this 7-1/2-ton heat pump indicated that any HVAC product costing 30% more than its equivalent competition would have only 20% of the potential market it would have if the new product could be sold at no premium. Consequently, the program sponsors decided that the commercialization potential of the 7-1/2-ton heat pump was not sufficient to warrant continued development of this heat pump in the 7-1/2-ton size range.

After an examination of the market study, and performing some rough estimates for the cost of a larger capacity heat pump utilizing the technology generated for the 7-1/2-ton system, it was decided that a viable market might exist for a 125-ton gas-fired heat pump product. Therefore, all new development work planned for the 7-1/2-ton program was cancelled, and the program was redirected toward the 125-ton size. Unlike the 7-1/2-ton program, the 125-ton program hardware fabrication was deferred until after the market analysis, product costing and business venture analysis efforts were completed. Thus, significant hardware expenditures could be avoided if business prospects did not appear to be positive. All the above studies and preliminary design work were completed; and when analyzed by the Program Advisory Board and program sponsors, a conclusion was reached that the 125-ton product concept also could not evolve into a viable business. Therefore, the Program Advisory Board (PAB) recommended that this program be terminated.

2.0 COSTING METHODOLOGY

2.1 Overview of Costing Methodology

In concept, this system costing study was to produce three cost estimates for both the 7-1/2- and 125-ton capacity systems: preliminary, interim, and final system costs.

However, for the reasons explained previously, both the 7-1/2- and 125-ton system development programs were either redirected or terminated before the final costing figures were generated. In fact, the redirection/termination decisions were, in part, a result of the respective interim costing study results.

The costing studies for the 7-1/2-ton and 125-ton heat pumps were conducted by two different teams. The 7-1/2-ton system costs were produced by the Masco Corporation under contract to CNG; the 125-ton system costs were developed primarily by MTI personnel, with some assistance from Charles J. R. McClure and Associates Inc., Consulting Engineers, St. Louis. In general, the costing methodologies used by the Masco and MTI teams were identical. In the discussion which follows, illustrations and examples from the 125-ton costing exercise will be cited in order to clarify procedures used in the costing methodology.

Even though the final system costing was not performed for either of the two heat pump systems, the description of the methodology that would have been used to do that costing is included below. The final costing methodology is being explained in order to clearly point out how the entire costing study was integrated with the overall hardware development program.

The logic flow diagram that was followed in conducting the preliminary costing study is shown in Figure 2-1; Figures 2-2 and 2-3 show the flow diagrams for conducting the interim and final costing studies, respectively. The milestone chart that was followed in conducting this study from preliminary to final costing, as well as displaying the timing and interaction of the major tasks for this entire program is shown in Figure 2-4. Since a decision was made at the May, 1979 PAB meeting to terminate the program, the events shown occurring after that meeting did not take place.

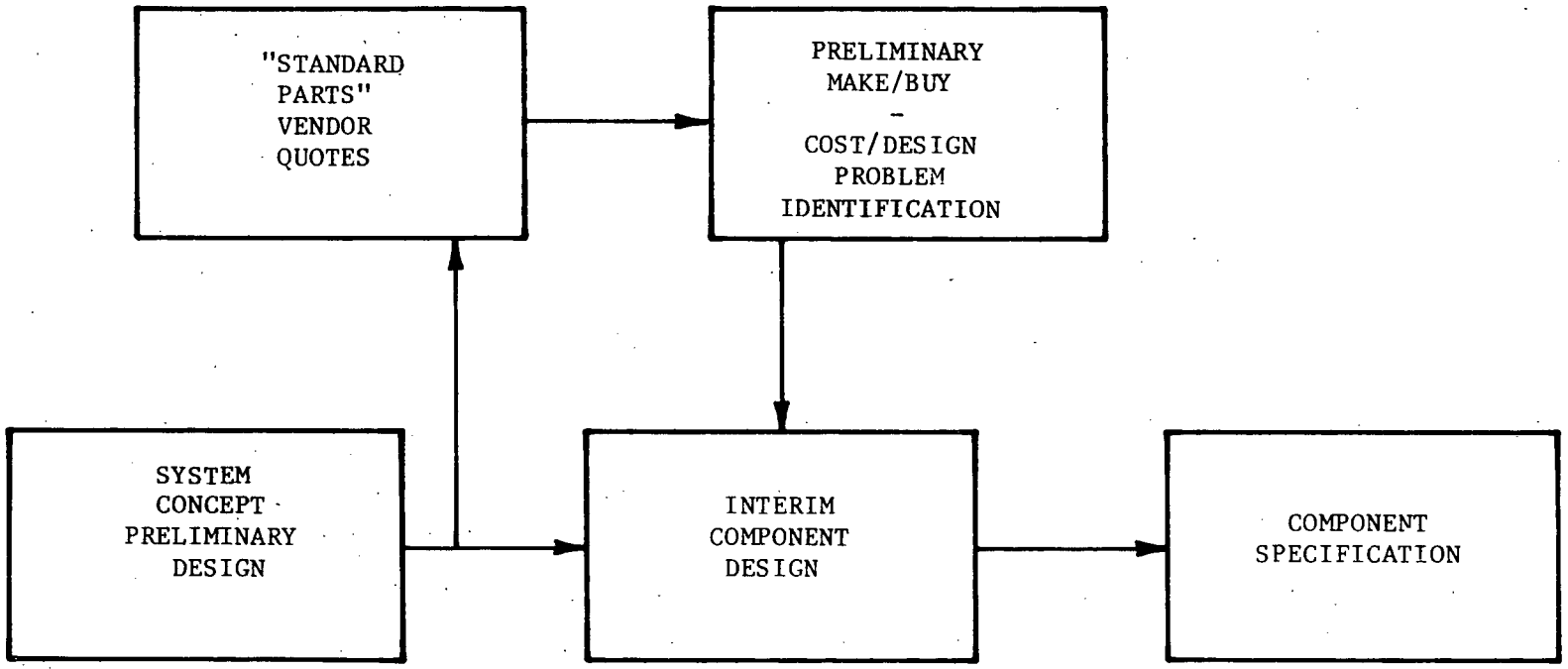

Fig. 2-1 Product Costing Plan - Preliminary Estimate

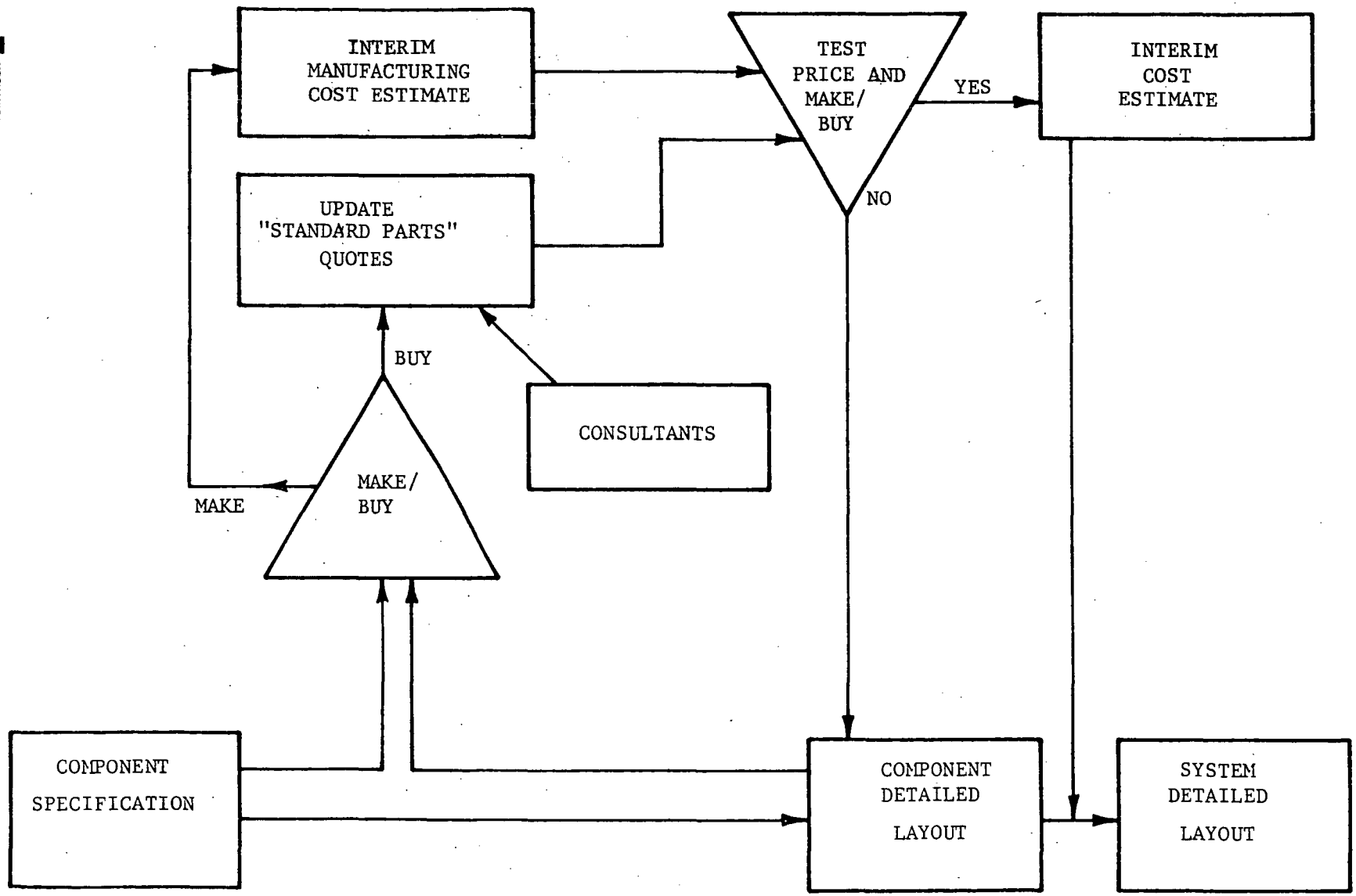

Fig. 2-2 Product Costing Plan - Interim Iteration

792670

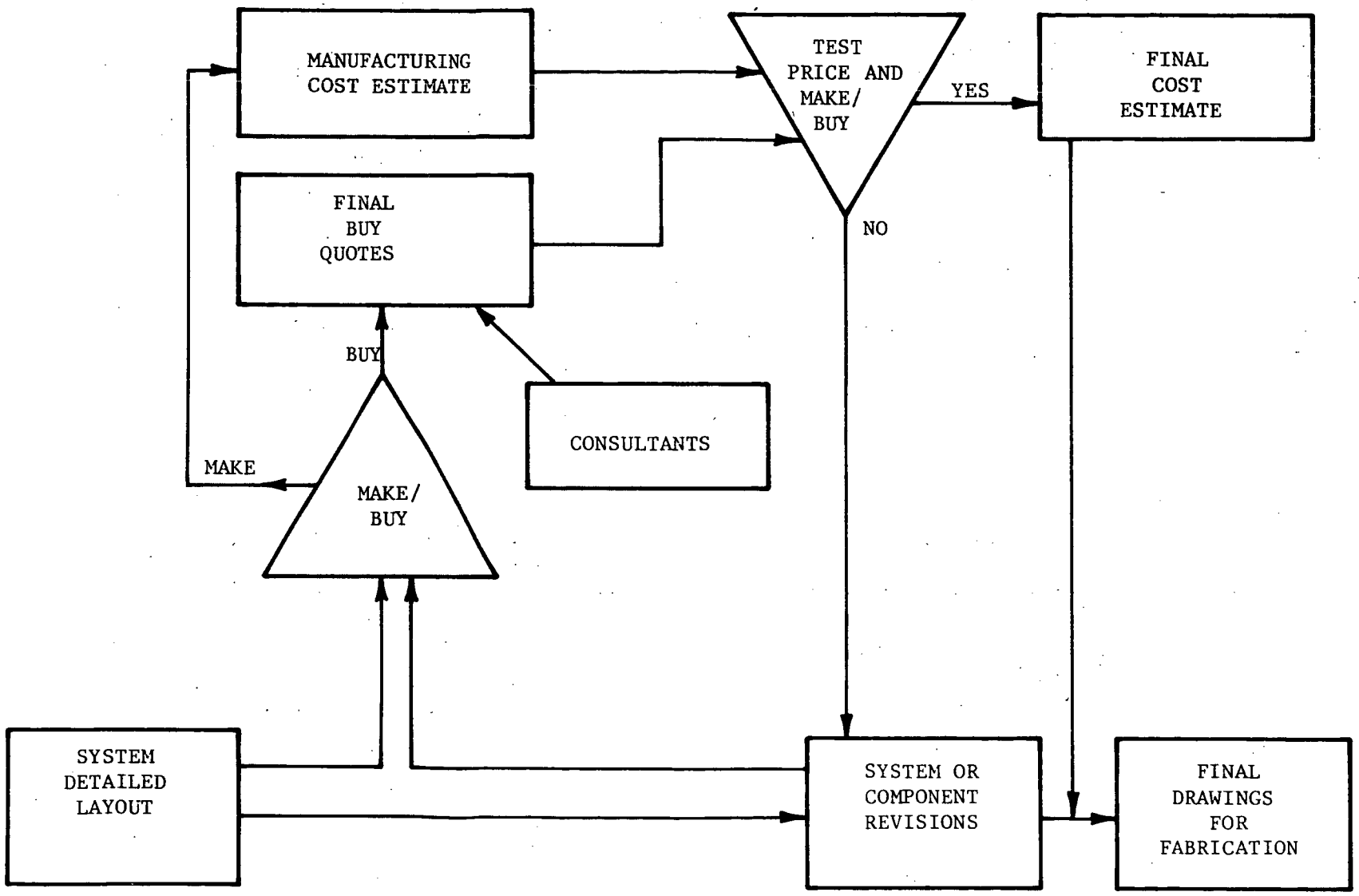

Fig. 2-3 Product Costing Plan - Final Iteration

792671

MECHANICAL TECHNOLOGY INCORPORATED

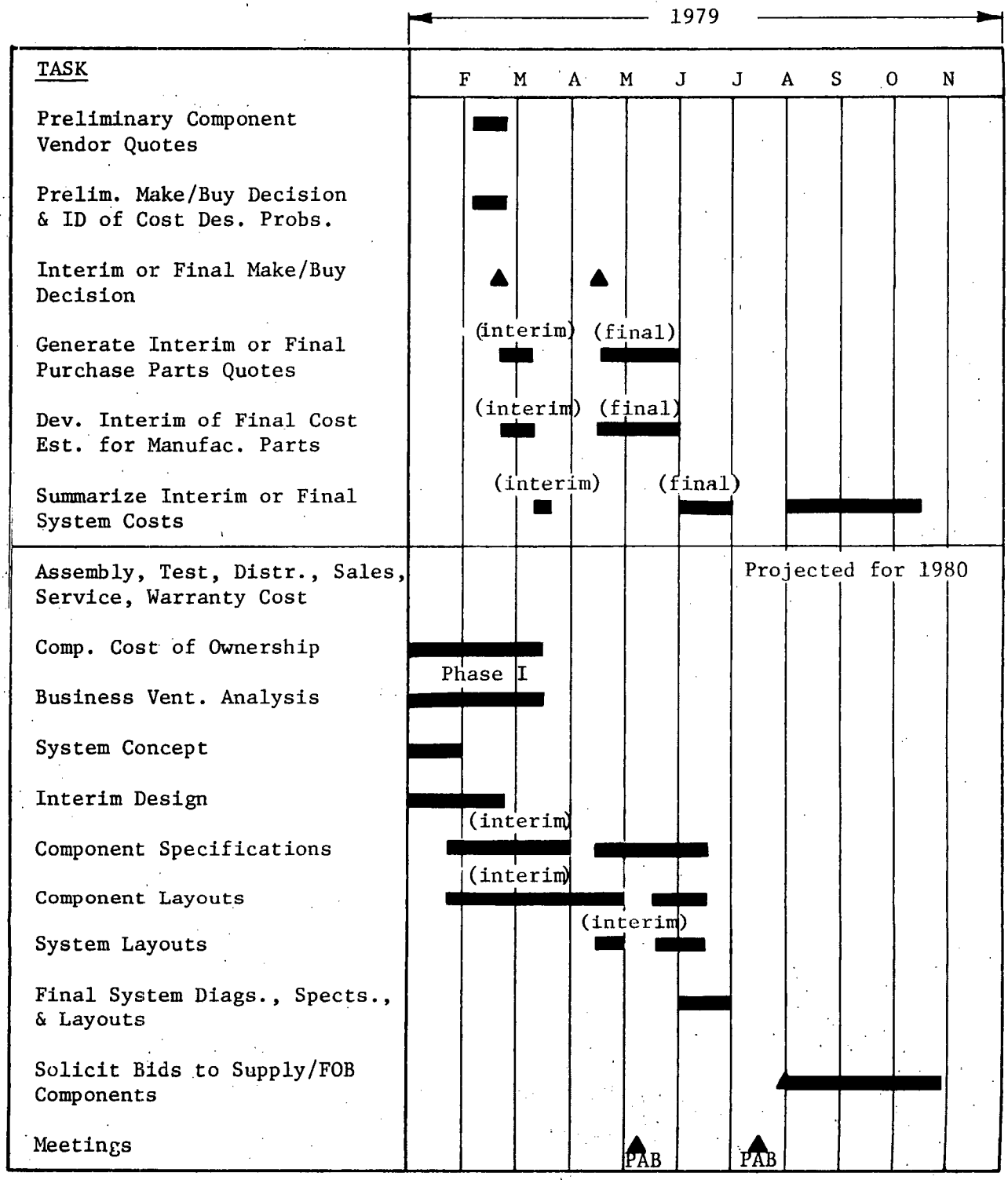

Fig. 2-4 Schedule of Major Tasks for the 125-Ton Costing Effort

Prior to conducting either the preliminary, interim or final costing efforts, a means of tabulating the system's costs, component by component, was devised for the 125-ton system. The entire heat pump system was subdivided into 15 subassemblies; and each subassembly was subdivided into components, parts and/or operations (104 in all). Each of these items was assigned a unique "tracking" number. All of these latter items were listed on a tabulations sheet so that their costs could be recorded. The breakdown of the system product concept into subassemblies, components and parts/operations for costing is pictorially displayed in Figure 2-5. Table 2-1 is an example of the tabulation table used to track component costs. Attachments A and B to this Appendix Volume IV document the procedure used to cost several key components for the 7-1/2-ton and LSM systems, respectively. In addition, these attachments contain completed tabulation tables that provide a complete cost breakdown for all the major components for both heat pump systems. These attachments are included with this volume to further illustrate the costing methodology being described in this section.

2.2 Preliminary Cost - 125-Ton System

The 125-ton costing study was initiated when a system concept had been agreed upon, and a preliminary list of system components had been generated. For the preliminary system cost, a vendor quote was obtained for every commercially available component on the list.

During the course of this preliminary costing work, a certain amount of information was generated in addition to the costs. This information included: the identification of prime and alternative component suppliers; the identification of commercially available components that may not have met the originally specified component performance requirements, but would have "done the job" and cost significantly less; and recommendations from component suppliers to improve the cost effectiveness of the system without significantly penalizing its performance. The results of this prelimianry costing exercise were given to the design engineers so that they could determine which components warranted their attention for intensive cost-reduction engineering efforts.

The design engineers integrated the results of the preliminary costing effort with their continuing design work. With this preliminary cost information, an interim system design and set of component specifications was developed.

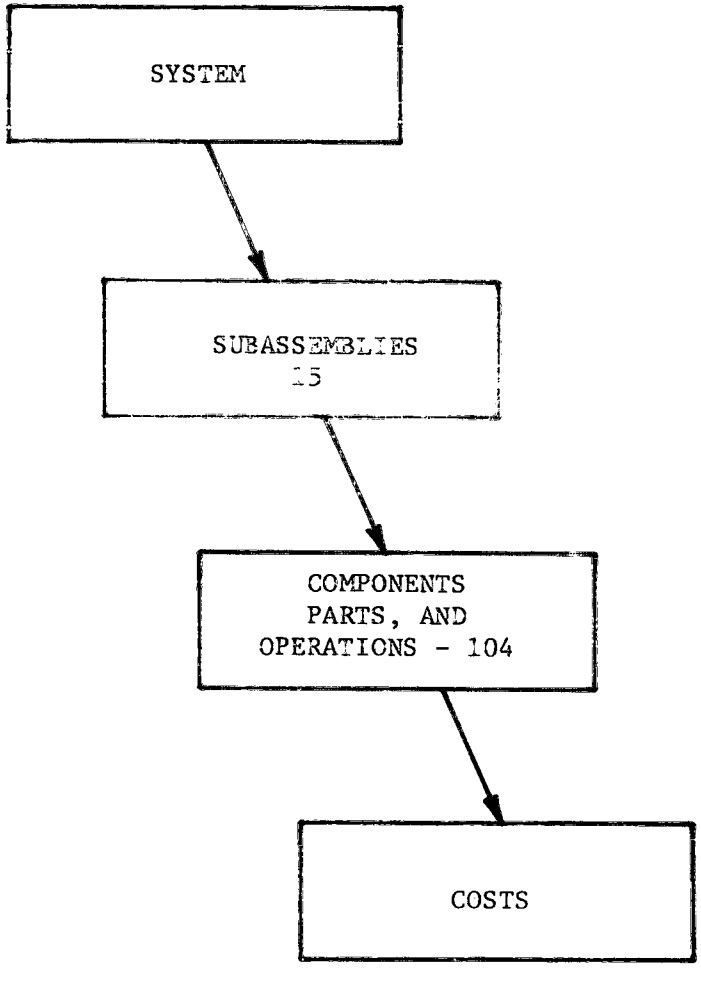

Fig. 2-5 Breakdown of System for Costing

TABLE 2-1

CNG/HSPF* LSM SYSTEM COST COMPONENT LIST

CNG/HSPF LSM SYSTEM COST COMPONENT LIST

ITEM NO.	COMPONENT DESCRIPTION	COMPONENT SPECIFICATION	COMPONENT COST
1.0	High Speed Turbine		
1.1	Curtis Wheel First Stage (H.P.)		
1.2	Curtis Nozzle & Intermediate Vane		
1.3	Second Stage Wheel (L.P.)		
1.4	Second Stage Nozzle		
1.5	Casing/Steam Chest		
1.6	Seals		
1.7	Bearings		
2.0	HS Turbine Lube System		
2.1	Oil Cooler		
2.2	Oil Filter		
2.3	Oil Pump		
2.4	Pump Motor		
2.5	Pump Motor Starter		
2.6	Temperature Control Valve(s)		
2.7	Pressure Control Valve(s)		
3.0	Motor/Generator		
3.1	Induction Motor		
3.2	Motor Disconnect		
3.3	Motor Starter		
3.4	Synchronizer		
4.0	Mechanical Drive System		
4.1	Turbine Gear Set		
4.2	Compressor Gear Set		
4.3	Bearings		
4.4	Steam Seal		
4.5	Refrigerant Seal		
4.6	Clutch		
4.7	Clutch Controller		

* Features embodied in the 7-1/2-ton unit.

TABLE 2-1 (con't.)

ITEM NO.	COMPONENT DESCRIPTION	COMPONENT SPECIFICATION	COMPONENT COST
5.0	Steam System Water		
5.1	Feed Water Treat/Polish		
5.2	Double Bundle Condenser/Deareator		
5.3	Vapor Recovery Condenser		
5.4	Condensate Pump		
5.5	Vacuum Pump		
5.6	Boiler Feed Water Pump		
5.7	Regenerator		
5.8	Piping		
6.0	Steam Generator		
6.1	Tubing and Shell		
6.2	Separator		
6.3	Burner		
6.4	Feed Water Pump		
7.0	Refrigeration System		
7.1	R-12 Evaporator		
7.2	R-12 Condenser		
7.3	Purge System		
7.4	R-12 Charge		
7.5	Mounting Base		
7.6	Piping		
8.0	Refrigerant Compressor		
8.1	Impeller		
8.2	Inlet Guide Vanes		
8.3	Lube System		
8.4	Compressor Housing		
8.5	Seal		

TABLE 2-1 (con't.)

ITEM NO.	COMPONENT DESCRIPTION	COMPONENT SPECIFICATION	COMPONENT COST
9.0	Water Circulation		
9.1	Chilled Water Pump		
9.2	Hot Water Pump		
9.3	Chilled Water Pump Starter		
9.4	Hot Water Pump Starter		
9.5	Water Piping		
10.0	Controls — Steam		
10.1	Steam Generator Temp/Press		
10.2	Steam Generator Feedwater		
10.3	Steam Generator Burner U.L.		
10.4	Turbine Trip Valve		
10.5	Turbine Warm Up		
10.6	Turbine Overspeed Tach & Sensor		
10.7	Atemperation Controls		
10.8	Constant Flow Control		
10.9	Drain Solenoids		
10.10	Relief Valves		
10.11	Condenser Level Control		
10.12	Separator Control		
11.0	Controls — Refrigerant		
11.1	Surge Sensor		
11.2	Inlet Guide Vane Actuator		
11.3	Expansion Device		
11.4	Temp Controller		
11.5	Temp Sensor		
11.6	Temp Switch		
12.0	Controls — Water Treatment		

TABLE 2-1 (con't.)

ITEM NO.	COMPONENT DESCRIPTION	COMPONENT SPECIFICATION	COMPONENT COST
13.0	System Control Panel		
13.1	Panel Relays/Switching		
13.2	R-12 Evaporator Pressure Gauge		
13.3	R-12 Condensor Pressure Gauge		
13.4	Steam Condensor Pressure Gauge		
13.5	Oil Temp Gauge		
13.6	Oil Press Gauge		
13.7	Temp Switches		
13.8	Press Switches		
14.0	Assembly		
14.1	Test Compressor		
14.2	Test Turbine		
14.3	Assemble System Purge & Leak Check		
14.4	Test Unit & Paint		
15.0	Extraneous Hardware		
15.1	Cooling Tower		
15.2	Cooling Tower Pump/Starter		
15.3	Cooling Tower Temp Control Valve		
15.4	Cooling Tower Temp Controller		

This interim set of designs and specifications was the basis of an interim effort much more intense than the preliminary system cost effort.

2.3 Interim Cost - 125-Ton System

The design information available at the start of the interim costing work was reviewed to determine whether individual components should be purchased or fabricated. In the case of some components, it was not known at the time of the review to which list they should be assigned. In these cases, two estimates were obtained, a purchase estimate and a make estimate.

Components that were assigned to the manufacturing list were generally costed using Turbonetics Inc. manufacturing methods. Several approaches were used to determine these "make" costs. If Turbonetics had previously manufactured a part similar to the one(s) required in the heat pump, then a rough cost estimate was developed by extrapolating the costing data from the earlier made component. If the component did not resemble any components previously made by Turbonetics, then an estimate was made of the material, machine costs and manufacturing time involved. This information was reduced to component costs by multiplying the three quantities by the appropriate cost factors (e.g. dollars per pound, dollars per hour, etc.)

Several methods were used to determine the cost of purchased components. The first method utilized the experience of the costing team members. If any team member had purchased or received a quote for a component similar to the one required for the heat pump, then that cost was submitted. Each cost was appreciated for the effects of inflation, recently announced cost changes and other factors. When a component's cost could not be determined using this method, then the component's specification was compared with that of commercially available hardware in equipment catalogs. Equipment part and model numbers were recorded; and vendors were requested to submit a verbal or written quote. The quote used in the final system costing was the lowest cost component with acceptable performance.

All of the component costing information was recorded on the master pricing list. Table 2-1 is a first draft of the cost list that was used in the 125-ton heat pump costing study. This list was organic in that its content was regularly updated reflecting the evolution of the ststem design - driven by cost and performance considerations.

2.4 Final System Cost

The final product costing work was to follow a procedure similar to that used in the interim costing phase. If the development efforts for the 7-1/2- and 125-ton heat pumps had not been terminated, the final system costing would have been conducted as described below.

In order to cost-out manufactured components, detailed manufacturing drawings would be prepared. Decisions would be made as to whether parts could be cast and machined, or completely machined. Depending on the manufacturing process chosen, additional appropriate drawings would be made; material and labor estimates developed; and suppliers of materials and services located and asked to offer quotes for their portion of the required work. All of this information would then be catalogued. Ultimately, a firm cost for each manufactured component would be produced. This cost would have incorporated cost reduction considerations resulting from mass production.

For each of the purchased components, at least one, or as many as three suppliers would be identified. A quote would be obtained from each supplier for the subject component in the quantities needed to satisfy the projected market requirements. For each component, its performance specifications, potential suppliers, their product model numbers and nomenclature, and cost information would be catalogued.

Simultaneously with the hardware costing effort, a product assembly, testing, distribution, sales, service and warranty costing exercise would be performed. The prorated sum of these overhead costs plus the hardware costs and profit would have comprised the final heat pump selling price.

2.5 Costing of Alternate Commercially Available Heating and Cooling Systems

In order to determine the competitiveness of the gas-fired heat pump, it was necessary to calculate the cost of commercially available heating and cooling systems that could provide the same services as the gas-fired heat pumps. Appendicies Volumes III and VII of this report, the Comparative Cost of Ownership Study (CCOS) for the 7-1/2-ton and 125-ton units, respectively, describe the methodology used in determining the owning and operating cost of several

alternative heating and cooling systems. To determine the first costs for the alternative heating and cooling systems, architectural and engineering (A & E) firms were retained for the 125-ton system. The firms reviewed the specifications for two types of buildings (office and motel) that comprised the largest potential user market for the gas-fired heat pumps. Then, as many as five separate heating and cooling systems were designed and costed-out by the A & E firms for those buildings. Since all the components of the heating and cooling systems in the A & E firms' designs utilized commercially available components, the firms obtained quotes for the components, or knew their prices from having purchased them in the past.

The owning and operating costs for the five systems were determined in order to assure that consumer economics for the gas-fired heat pump's competition had been completely quantified.

3.0 SUMMARY OF RESULTS

3.1 7-1/2-Ton Gas-Fired Heat Pump

The 7-1/2-ton breadboard test unit* was used as the basis for a preliminary cost estimate. Since the effort to redesign the system for the interim and final costs was not conducted, it was necessary to make a number of assumptions to extrapolate these preliminary results into "interim" and "final" design costs. The accuracy of these final results depended to a great extent on the exactness of the following assumptions:

- Production volume of 4000 units per year
- All the components with the exception of the high speed turbomachinery were to be purchased.
- A single high-frequency ac motor driven by the heat pump's alternator would be mechanically coupled to the air handling fans.
- A dry coil evaporator would be used.
- A hermetic seal would be used to isolate the steam and refrigerant. No water treatment or air removal would be required in the power fluid loop.
- The controls and accessories were approximately 15% of the hardware costs.

Based on these assumptions, the preliminary cost of the 7-1/2-ton gas-fired heat pump was determined to be $22,489 ($2998 per ton). The cost breakdown by components is shown in Table 3-1.

Using these costs as a basis, a second estimate of the "final" cost was made using alternate assumptions in an effort to reduce the system's cost. These alternate assumptions were as follows:

- Valves and piping components could be made for 1/3 the purchased cost.
- System assembly and test time could be reduced by 1/2, from eight man-days to four man-days.

*The 7-1/2-ton program demonstration unit.

TABLE 3-1

7½-TON MANUFACTURING PRELIMINARY COST - BASIC ASSUMPTIONS

Components	Cost
Turbomachinery	$ 1,931
Controls	1,800
Frame and Enclosure	1,358
Heat Exchanger	1,090
Fan and Motors	850
Valves and Piping	4,651
System Assembly and Test	2,560
Steam Generator and Regenerator	2,071
Cost of Components and Assembly	16,311
Mark Up (27.5%)	6,187
Total	$22,498

- Steam generator and regenerator costs could be reduced by 1/2 of the vendor price (see Table 3-1).
- Turbomachinery cost could be reduced by 25% from the estimate given in Table 3-1.
- Control components could be purchased or made for 15% of hardware cost.
- Frame and enclosure could be made for 75% of the price quoted in Table 3-1.
- Fan and motor costs could be reduced by manufacturing the fans and getting a cost reduction of 10% on the motors - total cost reduction of 12%.

Using these assumptions in addition to the previous ones, the estimated "final" manufactured cost for the gas-fired heat pump resulted in a selling price of $12,383 ($1,651 per ton). Table 3-2 displays these costs as a function of the system's elements. This selling price was significantly more than the standard unitary 7-1/2-ton system cost of $2,200 ($300 per ton).

3.2 125-Ton Gas-Fired Heat Pump

Preliminary costs for the LSM system were developed. Including the 27.5% markup, the preliminary cost for this system was approximately $110,000. This cost, which was only for the turbochiller package, did not include the cost of the cooling tower and pump, and the gas boiler. These other costs would have added approximately $13,000 to the cost of the system. This preliminary cost had been calculated with the knowledge that it would not be competitive. As explained in Section 2.2 of this volume, a great deal of the information learned while determining this preliminary cost identified cost reductions in the interim system design that could be made without sacrificing performance.

In developing the interim costs for the 125-ton system, an assumption was made that this heat pump would be manufactured in quantities of 200 per year. The interim cost for the heat pump element (turbochiller package) of the heating and cooling system was $77,331. When the other element's costs, such as the cooling tower and gas boiler, were added to this figure, the grand total was $90,331. The individual components and their costs for the turbochiller packages are displayed in Table 3-3.

TABLE 3-2

7½-TON MANUFACTURING "FINAL" COST - ALTERNATE ASSUMPTIONS

Components	Cost
Turbomachinery	$1448
Controls	1000
Frame and Enclosure	1000
Heat Exchanger	1000
Fans and Motors	750
Valves and Piping	1500
System Assembly and Test	1280
Steam Generator and Regenerator	1000
Cost of Goods	8978
Mark Up (27.5%)	3405
	$12,383

TABLE 3-3

INTERIM PRODUCT COSTING FOR LSM TURBOCHILLER PACKAGE

Major Subassemblies	Cost
High Speed Turbine	$ 5,449
Turbine Lube System	335
Motor (Generator) and Electrical Control (75 hp)	2,027
Mechanical Drive (Gears)	3,333
Steam Condenser/Condensate System	8,336
Water Treatment	3,085
Steam Generator	3,020
Refrigeration System	15,886
Refrigeration Compressor	1,413
Water Circulation	950
Steam Controls	5,465
Refrigerant Controls	2,034
Water Controls	497
System Control Panel	1,984
System Assembly and Test	2,250
Cost of Goods	$56,064
Markup (27.5%)	21,267
	$77,331

3.3 Competative Equipment

As explained in Section 2.5, a number of commercially available alternative 125-ton heating and cooling systems costs were determined. The cost for two of these 125-ton systems are described below. (See Appendices Volumes III and VII for complete tabulation of costing results for all the alternate heating and cooling systems.) These two systems represented the most likely candidates that a contractor would consider buying instead of the 125-ton gas-fired heat pump. A standard heating/cooling (no heat pumping) system would cost $40,796; a heat recovery (heat pumping) system would cost $54,486. These costs, as well as those for the gas-fired heat pump, are summarized in Table 3-4.

The conventional alternate to the 7-1/2-ton gas-fired heat pump was the year-round air conditioner (YAC). These systems comprised a gas-fired forced hot-air heating system combined with an electrically driven chiller. These systems can be purchased for approximately $6,500.

TABLE 3-4

LSM SYSTEM PRODUCT COSTING COMPARISON

System Types	Cost
Standard	
Single-Bundle Recip	$27,200
Circulating Pumps	1,176
Cooling Tower and Pump	6,510
Gas Boiler	5,900
Total	$40,786
Energy Conservative	
Double-Bundle Recip	$34,700
Circulating Pumps	1,176
Cooling Tower and Pump	6,510
Gas Boiler	5,900
Hot Water Storage Tank	6,200
Total	$54,486
LSM HSPF	
Turbochiller Package	$77,331
Cooling Tower and Pump	7,100
Gas Boiler	5,900
Total	$90,331

ATTACHMENT A

SUPPLEMENTARY INFORMATION FOR THE
7 1/2-TON SYSTEM COSTING

INTRODUCTION

Attachment A contains the completed tabulation sheets listing all the heat pump systems' components and their costs, and several detailed manufacturing process/planning sheets for several components of the 7-1/2-ton gas-fired heat pump. The first section of the Attachment is the summary tabulation sheet; the second section contains the representative examples showing how the costs for certain components were calculated.

As explained in Section 2.0 of this Appendix Volume IV, different methods were employed to calculate a component's cost depending on whether that component could be purchased or fabricated. The method of costing for two components that must be fabricated for the 7-1/2-ton heat pump is shown in this attachment. The costing of these components was performed by the MASCO Corporation.

Those items considered to be "make" items; i.e., manufactured from raw materials or castings and processed within the manufacturing/assembly facility, were defined as to material type, quantity and cost. Labor content was established using a modified motion/time method. The operation labor content was summed, modified by an efficiency factor, and multiplied by a labor rate.

TABLE A-1

PRELIMINARY SUMMARY TABULATION
7-1/2-TON COST - BASIC ASSUMPTIONS

Components	Cost
Turbomachinery	$ 1,931
Controls	1,800
Frame and Enclosure	1,358
Heat Exchanger	1,090
Fan and Motors	850
Valves and Piping	4,651
System Assembly and Test	2,560
Steam Generator and Regenerator	2,071
Cost of Components and Assembly	16,311
Mark Up (27.5%)	6,187
Total	$22,498

TABLE A-2

TURBOMACHINE COSTS

Part	Material	Mfg.	Total	Tooling Vendor	Tooling Mfg.
Turbine Wheel	*$150	$ 150	$ 300	$ 12,000	$ 27,200
Alternator	** 33	70	103	--	--
Compressor Wheel	***20	75	95	9,000	14,300
Shaft and Rotor	4	120	124	5,000	15,200
Bearing Turbine End/Bearing Compressor End	--	80	80	--	8,000
Compressor Suction and Discharge Housing	11	23	34	37,500	9,000
Alternator Housing	27	64	91	25,000	15,000
Bearing/Seal Housing	20	56	76	15,000	10,000
Turbine Inlet Manifold	50	45	95	10,000	8,000
Nozzle Plate	* 150	180	330	10,000	11,500
Diffuser	30	82	112	18,000	7,000
Seal	--	80	80	--	--
Thrust Bearing Retainer and Assembly	152	54	206	10,000	17,500
Assembly and Balance	--	100	100	--	180,000
Miscellaneous	20	85	105	--	180,000
	$667	$1264	$1931	$151,500	$502,700

*An estimate from Howmet -- some design modifications required

**Estimated for the windings and assembly

***Quote updated from 1973 when working on the T.E.S. Unit

All totals less tooling amortization

The said manufacturing costs are calculated assuming the work could be performed in a shop having sufficient N.C. Equipment in-house and high caliber machining operators capable of working to the very stringent tolerances required to produce a product of this nature.

Based on the above, an hourly rate of $40.00 per hour has been used for all cost calculations. This hourly rate could be reduced somewhat if the very latest in N.C. Technology were to be purchased. However, such facilites would be costly and amortization over low production volumes (1000-4000 units per year) would dicate manufacturing costs higher than shown.

MECHANICAL TECHNOLOGY INCORPORATED

PROCESS PLANNING SHEETS

7 1/2-TON HEAT PUMP

MASCO CORPORATION MANUFACTURING PROCESS SHEET

PAGE 1 OF ___

DIVISION / CUSTOMER	PART NAME / MATERIAL SPEC	DATE / PART PRINT DATE	CUSTOMER PART NO.	MASCO PART NO.
MTT	TURBINE WHEEL / INVESTMENT CASTING	6/15/77 / 1/28/77		095-A001-D/2

OPER. NO.	OPERATION DESCRIPTION	EQUIPMENT DESCRIPTION	TOOL NO.	GAGE NO.	OPERATION SPECIFICATIONS R.P.M.	S.F.M.	FEED	C.T.
	MATL SPEC: INCONEL 713 INVESTMENT CASTING - SOLUTION TREATED							
0	INSTALL FILLER PLASTIC IN BLADE PASSAGES - ALLOW TO CURE FOR 10 MIN							
	CT 2.0 MIN							
20	ROUGH & FINISH TURN O.D. -	TURRET LATHE	R TURN O.D.		28	40	.005	1.8
	ROUGH & FINISH TURN PILOT		F TURN O.D.		28	40	.003	3.0
	O.D. - FACE BLADE INLET		R TURN PILOT		204	40	.005	.70
	SURFACE - FACE BLADE		F TURN PILOT		204	40	.003	1.1
	EXIT SURFACE - FACE		FACE INLET		31	40	.005	3.2
	SHOULDER - FORM PILOT		FACE EXIT		31	40	.005	3.2
	CHAMFER	TOOLING COST 3000.00	FACE SHOULDER		153	40	.005	.40
			FORM CHAMFER		204	40	.002	.30
	CT 17.0 MIN							

MECHANICAL TECHNOLOGY INCORPORATED

MASCO CORPORATION MANUFACTURING PROCESS SHEET

DIVISION	PART NAME	DATE	CUSTOMER PART NO.	MASCO PART NO.
CUSTOMER	TURBINE WHEEL			095-A001-D-P2
	MATERIAL SPEC	PART PRINT DATE		

OPER. NO.	OPERATION DESCRIPTION	EQUIPMENT DESCRIPTION	TOOL NO.	GAGE NO.	OPERATION SPECIFICATIONS R.P.M.	S.F.M.	FEED	C.T.
30	CUTOFF CLAMPING HUB -	TURRET LATHE	CUTOFF		115	30	.001	4.5
	FACE CUTOFF SHOULDER -		FACE SHOULDER		150	40	.005	.72
	DRILL .327 DIA HOLE		DRILL .327 DIA		130	10	.003	4.8
	THRU - FORM I.D.	TOOLING COST 2000.00	FORM CHAM		500	40	.001	.10
	CHAMFERS							
	CT 14.0 MIN							
40	DRILL (6) .156 DIA	DRILL PRESS			245	10	.001	2.0
	HOLES THRU							
	CT 4.0 MIN	TOOLING COST 1000.00						
50	FINISH BORE .327	PRECISION BORE			400	40	.001	3.3
	DIA I.D.							
	CT 5.5 MIN	TOOLING COST 3000.00						

MECHANICAL TECHNOLOGY INCORPORATED

MASCO CORPORATION MANUFACTURING PROCESS SHEET

ISION	PART NAME	DATE	CUSTOMER PART NO.	MASCO PART NO.
TOMER	TURBINE WHEEL			095-A001-D-P2
	MATERIAL SPEC	PART PRINT DATE		

R.	OPERATION DESCRIPTION	EQUIPMENT DESCRIPTION	TOOL NO.	GAGE NO.	OPERATION SPECIFICATIONS R.P.M.	S.F.M.	FEED	C.T.
	DRILL & REAM (2) .070 DIA HOLES IN SHOULDER	DRILL PRESS		DRILL (2)	550	10	.001	2.0
				REAM (2)	550	10	.002	6.0
		TOOLING COST 1000.00						
	CT 5.0 MIN							
	GREEN GRIND PILOT O.D. & PILOT SHOULDER	O.D. GRINDER			306	80	.0002	1.0
	CT 3.0 MIN	TOOLING COST 1000.00						
	GREEN SURFACE GRIND OUTBOARD SHOULDER & BLADE SURFACE EXIT SIDE	SURFACE GRINDER		SHOULDER	230	60	.0002	.50
				BLADE	412	60	.0002	2.4
		TOOLING COST 1500.00						
	CT 6.0 MIN							

MECHANICAL TECHNOLOGY INCORPORATED

MASCO CORPORATION MANUFACTURING PROCESS SHEET

PART NAME	DATE	CUSTOMER PART NO.	MASCO PART NO.
TURBINE WHEEL			095-A001-A-P2
MATERIAL SPEC	PART PRINT DATE		

OPER. NO.	OPERATION DESCRIPTION	EQUIPMENT DESCRIPTION	TOOL NO.	GAGE NO.	OPERATION SPECIFICATIONS R.P.M.	S.F.M.	FEED	C.T.
10	GREEN SURFACE GRIND BLADE SURFACE ENTRANCE SIDE	SURFACE GRINDER			42	60	.0002	2.4
		TOOLING COST 1000.00						
	CT 5.0 MIN							
100	GREEN GRIND BLADE O.D. TO PRESS FIT SHROUD	O.D. GRINDER			56	80	.0002	1.8
		TOOLING COST 500.00						
	CT 4.5 MIN							
110	SOAK IN ACETONE TO REMOVE PLASTIC FILLER							
	CT 5.0 MIN/5 PCS							

MECHANICAL TECHNOLOGY INCORPORATED

MASCO CORPORATION MANUFACTURING PROCESS SHEET

CUSTOMER	PART NAME	DATE	CUSTOMER PART NO.	MASCO PART NO.
	TURBINE WHEEL ASSY			095-A001-D
	MATERIAL SPEC	PART PRINT DATE		

OPER. NO.	OPERATION DESCRIPTION	EQUIPMENT DESCRIPTION	TOOL NO.	GAGE NO.	OPERATION SPECIFICATIONS R.P.M.	S.F.M.	FEED	C.T.
120	PRESS SHROUD #095-A001-D-P3 ONTO WHEEL	ARBOR PRESS						
		TOOLING COST 200.00						
	CT 3.0 MIN							
130	SILVER BRAZE SHROUD TO BLADE TIPS	BELT FURNACE						
	CT 45 MIN / 30 PCS							
140	AGE HARDER TO RC 42							
	CT 18 HRS / 200 PCS							

MECHANICAL TECHNOLOGY INCORPORATED

MASCO CORPORATION MANUFACTURING PROCESS SHEET

PAGE 6 OF ___

PART NAME	DATE	CUSTOMER PART NO.	MASCO PART NO.
TURBINE WHEEL ASSY			
MATERIAL SPEC	PART PRINT DATE		095-A001-D

CUSTOMER

OPER. NO.	OPERATION DESCRIPTION	EQUIPMENT DESCRIPTION	TOOL NO.	GAGE NO.	OPERATION SPECIFICATIONS R.P.M.	S.F.M.	FEED	C.T.
150	FINISH BORE .327 DIA HOLE	PRECISION BORE			400	40	.001	3.3
	CT 5.5	TOOLING COST 500.00						
160	FINISH GRIND PILOT O.D. & PILOT SHOULDER	O.D. GRINDER			300	80	.0002	1.0
	CT 3.0	TOOLING COST 500.00						
170	FINISH GRIND OUTBOARD SHOULDER & BLADE SURFACE EXIT SIDE	SURFACE GRINDER		SHOULDER	230	60	.0002	.50
				BLADE	42	60	.0002	2.4
	CT 6.0 MIN	TOOLING COST 500.00						

MECHANICAL TECHNOLOGY INCORPORATED

MASCO CORPORATION MANUFACTURING PROCESS SHEET

PAGE 7 OF —

PART NAME	DATE	CUSTOMER PART NO.	MASCO PART NO.
TURBINE WHEEL ASSY			095-A001-D
MATERIAL SPEC	PART PRINT DATE		

OPER. NO.	OPERATION DESCRIPTION	EQUIPMENT DESCRIPTION	TOOL NO.	GAGE NO.	OPERATION SPECIFICATIONS R.P.M.	S.F.M.	FEED	C.T.
180	FINISH SURFACE GRIND BLADE SURFACE ENTRANCE SIDE	SURFACE GRINDER			42	60	.0002	2.4
		TOOLING COST 500.00						
	CT 5.0 MIN							
190	FINISH GRIND SHROUD O.D.	O.D. GRINDER			56	80	.0002	1.8
		TOOLING COST 500.00						
	CT 4.5 MIN							
200	ABRASIVE FLOW POLISH BLADE SURFACES	ABRASIVE MACH						
	CT 3.0 MIN	TOOLING COST 500.00						

MECHANICAL TECHNOLOGY INCORPORATED

MASCO CORPORATION MANUFACTURING PROCESS SHEET

PAGE 8 OF —

CUSTOMER	PART NAME: TURBINE WHEEL ASSY	DATE	CUSTOMER PART NO.	MASCO PART NO.
	MATERIAL SPEC	PART PRINT DATE		095-A001-D

OPER. NO.	OPERATION DESCRIPTION	EQUIPMENT DESCRIPTION	TOOL NO.	GAGE NO.	OPERATION SPECIFICATIONS R.P.M.	S.F.M.	FEED	C.T.
210	DYNAMICALLY BALANCE TURBINE WHEEL ASSY WITHIN .001 IN.OZ.	BALANCER						
	CT 10.0							
220	SPIN TEST AT 70,000 RPM & INSPECT	TEST STAND						
	CT 10.0 MIN	TOOLING COST 10000.00						
	TOTAL C.T. - 122.8 MIN							

MECHANICAL TECHNOLOGY INCORPORATED

MASCO CORPORATION MANUFACTURING PROCESS SHEET

PAGE 1 OF ---

ISION / TOMER	PART NAME / MATERIAL SPEC	DATE / PART PRINT DATE	CUSTOMER PART NO.	MASCO PART NO.
MTI	COMPRESSOR WHEEL / INVESTMENT CASTING	6/15/77 / 1/5/77		095-A002-E

R.	OPERATION DESCRIPTION	EQUIPMENT DESCRIPTION	TOOL NO.	GAGE NO.	OPERATION SPECIFICATIONS R.P.M.	S.F.M.	FEED	C.T.
	MAT'L SPEC							
	SAE 6061 ALUM ALLOY							
	INVESTMENT CASTING							
	T-6 TEMPER							
0	INSTALL FILLER PLASTIC							
	BETWEEN BLADES-ALLOW							
	TO CURE FOR 10 MIN							
	CT 2.0 MIN							
0	TRACE BACKFACE CONTURE-	TRACER LATHE		TRACE	1100	900	.005	.50
	FORM HUB U'CUT. TURN			FORM	2700	900	.002	.10
	HUB O.D. - FACE HUB			R. TURN	2700	900	.005	.10
	END			F TURN	2700	900	.003	.13
		TOOLING COST 1000$		FACE	2700	900	.005	.10
	CT 4.5 MIN							

MECHANICAL TECHNOLOGY INCORPORATED

MASCO CORPORATION MANUFACTURING PROCESS SHEET

PART NAME	DATE	CUSTOMER PART NO.	MASCO PART NO.
COMPRESSOR WHEEL			095-A002-E
MATERIAL SPEC	PART PRINT DATE		

ER. O.	OPERATION DESCRIPTION	EQUIPMENT DESCRIPTION	TOOL NO.	GAGE NO.	OPERATION SPECIFICATIONS R.P.M.	S.F.M.	FEED	C.T.
30	TURN BLADE O.D. - FACE	TRACER LATHE		TURN	1100	900	.005	.10
	BLADE SURFACE - FACE		FACE	BLADE	1100	900	.003	.80
	HUB END - DRILL 1/4 DIA		FACE	HUB	2700	900	.005	.10
	THRU - REAM .265 DIA -		DRILL		3800	250	.005	.50
	FORM I.D. CHAMFERS	TOOLING COST $1500.00	REAM		4500	300	.005	.10
				CHAMFER	4500	300	.005	.10
	CT 5.0 MIN							
40	FINISH BORE .25 DIA HOLE	PRECISION BORE			7000	500	.001	.50
	CT 2.5 MIN	TOOLING COST 1500.00						
50	FINISH TURN HUB O.D. -	PRECISION BORE		TURN	2700	900	.002	.15
	FINISH FACE SHOULDER			FACE	2700	900	.001	.30
	CT 2.5 MIN	TOOLING COST 2000.00						

MECHANICAL TECHNOLOGY INCORPORATED

MASCO CORPORATION MANUFACTURING PROCESS SHEET

DIVISION	PART NAME	DATE,	CUSTOMER PART NO.	MASCO PART NO.
CUSTOMER	COMPRESSOR WHEEL MATERIAL SPEC	PART PRINT DATE		095-A002-E

OPER. NO.	OPERATION DESCRIPTION	EQUIPMENT DESCRIPTION	TOOL NO.	GAGE NO.	OPERATION SPECIFICATIONS R.P.M.	S.F.M.	FEED	C.T.
60	FINISH TURN BLADE CONTOUR	PRECISION LATHE			1100	900	.001	2.3
	CT 5.0 MIN	TOOLING COST 1500.00						
70	SOAK IN ACETONE TO REMOVE FILLER PLASTIC							
	CT 5.0 MIN / SPCS							
80	PRESS FIT SHROUD 095-A003-D-P3 & SEAL RING 095-A003-D-P2 ONTO WHEEL	ARBOR PRESS TOOLING COST 300.00						
	CT 3.0 MIN							

MECHANICAL TECHNOLOGY INCORPORATED

MASCO CORPORATION MANUFACTURING PROCESS SHEET

CUSTOMER	PART NAME	DATE	CUSTOMER PART NO.	MASCO PART NO.
	COMPRESSOR WHEEL ASSY			095-A803-D
	MATERIAL SPEC	PART PRINT DATE		

OPER. NO.	OPERATION DESCRIPTION	EQUIPMENT DESCRIPTION	TOOL NO.	GAGE NO.	OPERATION SPECIFICATIONS R.P.M.	S.F.M.	FEED	C.T.
90	BRAZE SHROUD TO WHEEL & SEAL RING TO SHROUD	BELT FURNACE						
	CT 45 MIN /50 PCS							
100	FINISH TURN WHEEL O.D. —	PRECISION BORE	TURN	O.D.	1100	900	.001	.25
	ROUGH & FINISH TURN		& TURN	RING	1700	900	.003	.15
	SEAL RING O.D.		& TURN	RING	1700	900	.001	.50
		TOOLING COST 1500.00						
	CT 3.0 MIN							
110	ABRASIVE FLOW POLISH BLADE SURFACES	ABRASIVE MACH						
	CT 3.0 MIN	TOOL COST 500.00						

MECHANICAL TECHNOLOGY INCORPORATED

MASCO CORPORATION MANUFACTURING PROCESS SHEET

PAGE 5 OF ___

DIVISION / CUSTOMER	PART NAME	DATE	CUSTOMER PART NO.	MASCO PART NO.
	COMPRESSOR WHEEL ASSY			095-A003-D
	MATERIAL SPEC	PART PRINT DATE		

OPER. NO.	OPERATION DESCRIPTION	EQUIPMENT DESCRIPTION	TOOL NO.	GAGE NO.	OPERATION SPECIFICATIONS R.P.M.	S.F.M.	FEED	C.T.
120	DYNAMICALLY BALANCE WHEEL ASSY WITHIN .0005 IN OZ	BALANCER						
	CT 10.0							
130	SPIN TEST AT 70,000 RPM & INSPECT	TEST STAND						
	CT 10.0 MIN	TOOLING COST 3000.00						
	CT TOTAL 50.5							

MECHANICAL TECHNOLOGY INCORPORATED

ATTACHMENT B

SUPPLEMENTARY INFORMATION FOR
THE 125-TON SYSTEM COSTING

INTRODUCTION

Attachment B contains the completed tabulation sheets listing all the heat pump system's components and their costs, and several detailed manufacturing process/planning sheets for several components of the 125-ton gas-fired heat pump. The first section of the attachment is the summary tabulation sheet; the second section contains the representative examples showing how costs for certain components were calculated.

As explained in Section 2.0 of this Appendix Volume IV, different methods were employed to calculate a component's cost depending on whether that component could be purchased or fabricated. This attachment contains three examples of the costing process used for purchased components; and one example of a fabricated component (all four of which were required for the 125-ton heat pump). These costs were calculated by MTI.

Those items considered to "make" items; i.e., manufactured from raw materials or castings and processed within the manufacturing/assembly facility, were defined as to material type, quantity, and cost. Labor content was established using a modified motion/time method. The operation labor content was summed, modified by an efficiency factor, and multiplied by a labor rate (e.g. Drawing Number 612D027 Part Number 8.1, Page B-21). The "buy" items were entered on the process/planning sheets as purchased items, and quotations were attached (e.g. see Part Number 3.1, Page B-7).

INTERIM CNG/HSPF SYSTEM
COST COMPONENT LIST

Orig. 3/23/79
Rev. A 4/6/79

ITEM NO.	COMPONENT DESCRIPTION	COMPONENT SPECIFICATION	COMPONENT COST
1.0	High Speed Turbine		$5449
1.1	Casing	MTI PN 612E028	$391
1.2	RR Nozzle Plate	MTI PN 612E028	537
1.3	Frt Nozzle Plate	MTI PN 612E028	471
1.4	RR Ring Plate	MTI PN 612E028	43
1.5	Frt Ring Plate	MTI PN 612E028	609
1.6	Curtis Wheel	MTI PN 612D011	817
1.7	1st Stage Wheel	MTI PN 612D013	594
1.8	Curtis Nozzle	MTI PN 612E028	331
1.9	Frt Bearing	Waukesha WB6 B-080-017-002	308
1.10	RR Bearing	Waukesha WB6 B-080-017-002	308
1.11	Shaft	SCF-6 - Turbonetics	182
1.12	Assembly		102
1.13	Bellows Connections	Ethylene Corp. Union end 1½"	240
1.14	Hardware and Minor Components		516
2.0	HS Turbine Lube System		335
2.1	Oil Cooler	15 GPM	50
2.2	Oil Filter	15 GPM 20 Micron	25
2.3	Oil Pump/Motor/Valve	15 GPM Gear	75
2.4	Piping		50
2.5	Pump Motor Starter	AB 709	50
2.6	Temperature Control Valve(s)	AMOT 1CMC	55
2.7	Pressure Control Valve	FUL-FLO VJ-SSP	30
3.0	Motor/Generator		2027
3.1	Induction Motor	75 Hp/3600 RPM	1217
3.2	Motor Disconnect/Starter	AB 712-EABD27	750
3.3	Fuses	AMP FRS-80	60
3.4			
4.0	Mechanical Drive System		3333
4.1	Turbine Gear	Helical Class 12	1068
4.2	Compressor Gear	Helical Class 9	502
4.3	Bearings	Bronze Bushing	9
4.4	Clutch	Formsprag RO-450	165
4.5	Gear Casing	MTI PN 612J001	1028
4.6	Assembly	MTI PN 612J001	228
4.7	Hardware and Minor Components		333

MECHANICAL TECHNOLOGY INCORPORATED

INTERIM CNG/HSPF SYSTEM
COST COMPONENT LIST

ITEM NO.	COMPONENT DESCRIPTION	COMPONENT SPECIFICATION	COMPONENT COST
5.0	Steam System Water		11421
5.1	Condensate Polishing	Barnstead Mod. PI-172	1485
5.2	Make-Up Water Treatment	Continental Mod. 3001RO	1600
5.3	Vapor Recovery Condenser		100
5.4	Condensate Pump	Crane 884E	611
5.5	Vacuum Pump (Vapor)	Kinney KLRC11	1078
5.6	Condenser/De-Aerator	253 ft^2 Double Bundle	5946
5.7	Regenerator	Amtech 2/29/79 Summary	326
5.8	Piping		275
6.0	Steam Generator		3020
6.1	Tubing and Shell	Amtech CNE 20539	1500
6.2	Separator	850 Psi Design	325
6.3	Pump Motor	3 Hp	120
6.4	Feed Water Pump	Cat Pump #330	257
6.5	Blower	3/4 Hp 240 CFM	618
6.6	Piping		200
7.0	Refrigeration System		15886
7.1	R-12 Evaporator	RE 12-30 580 ft^2	6504
7.2	R-12 Condenser	RC 12-110 710 ft^2	6797
7.3	Hardware and Minor Components		250
7.4	R-12 Charge	200 lbs	120
7.5	Mounting Base	6 ft x 15 ft	1875
7.6	Piping		250
8.0	Refrigerant Compressor	MTI PN 612D027	1413
8.1	Casing	MTI Estimate	114
8.2	Impeller	MTI Estimate	219
8.3	Bearings/Shaft Babbitt Sleeve Type	MTI Estimate	185
8.4	Volute/IGV Section	MTI Estimate	129
8.5	IGV Casing	MTI Estimate	62
8.6	IGV	MTI Estimate	67
8.7	Assembly		81
8.8	Vane Gears	McMaster Carr #6529N15	39
8.9	Ring Gear	MTI Estimate	17
8.10	Seal	Stein Seal Co. SSCY6866 Type	400
8.11	Hardware and Minor Components		100

INTERIM CNG/HSPF SYSTEM
COST COMPONENT LIST

ITEM NO.	COMPONENT DESCRIPTION	COMPONENT SPECIFICATION	COMPONENT COST
9.0	Water Circulation		950
9.1	Chilled Water Pump	250 GPM 30 ft Head	345
9.2	Hot Water Pump	200 GPM 15 ft Head	345
9.3	Chilled Water Pump Starter	AB 709	55
9.4	Hot Water Pump Starter	AB 709	55
9.5	Water Piping		150
10.0	Controls - Steam		5645
10.1	Steam Generator Temperature	TIC (Action Pak) AP2330-3229T	
		Fisher 546-2	423
10.2	Steam Generator Feed Water	Research Control Valve 1/4"	
		ATC-M	296
10.3	Steam Generator Burner	Pyronics 12SVL, 12BZR, 2420-	
		2-40, 1396C1/Honeywell	
		C7035A, R4138C	778
10.4	Turbine Trip Valve	Research 1/2" ATO-A	990
10.5			
10.6	Turbine Overspeed Tach & Sensor	AirPax 080-321-2110/210/1-0120	423
10.7	Ademperation Controls	Manual Globe Valve SW6723	300
10.8	Constant Flow Control	Republic 6641	500
10.9	Drain Solenoids	Atomic SS-8100	300
10.10	Relief Valves	CASHO 2-1/2" 2275	500
10.11	Condenser Level Control	Research 1/4"-ATO/Robert	
		Shaw SL-300-C41 Mod.	640
10.12	Separator Control	Armstrong 2414 HLS	150
10.13	Vacuum Pump Starter	AB 709-TAD	55
10.14	Steam Generator Feed Water Pump Starter	AB 709-TAD	55
10.15	Condensate Pump Starter	AB 709-TAD	55
11.0	Controls - Refrigerant		2034
11.1	Surge Sensor	United Electric J2K-357	163
11.2	Inlet Guide Vane Actuator	Bettis CB315-15/Fisher 546-2	386
11.3	Expansion Device	Fisher 2502 and 249-20/	
		Research 1/4" ATO-F	1090
11.4	Temperature Controller	Action Pak AP2230-3229-T	212
11.5	Temperature Sensor	Pyco 02-3175-02-3-5	55
11.6	Temperature Switch	United Electric F302-2B5	128
12.0	Controls - Water		497
12.1	Temperature Controller	Johnson T8000-1	109
12.2	Valve	Johnson V 5840-476	388

INTERIM CNG/HSPF SYSTEM
COST COMPONENT LIST

ITEM NO.	COMPONENT DESCRIPTION	COMPONENT SPECIFICATION	COMPONENT COST 1984
13.0	System Control Panel		
13.1	Panel Relays/Switching	Square D/AB/Hofman/Dialight	1138
13.2	R-12 Evaporator Pressure Gauge	US Gauge 1903/4½"	60
13.3	R-12 Condenser Pressure Gauge	US Gauge 1903/4½"	60
13.4	Steam Condensor Pressure Gauge	US Gauge 1903/4½"	60
13.5	Oil Temp Gauge	AMETEK 30-6260 EHT	17
13.6	Oil Press Gauge	US Gauge 2"P500 ¼ CBM	10
13.7	Temp Switches	Fenwall 228-50	220
13.8	Press Switches	United Electric J302#156	89
13.9	Oil Filter DPS	Mid-West 125AE	80
13.10	Level Switches	DeLaval LS800	250
14.0	Assembly		2250
14.1	Test Compressor		700
14.2	Test Turbine		400
14.3	Assemble System Purge & Leak Check		900
14.4	Test Unit & Paint		250
		Mfg. Cost Total	56,064
		Markup (27.5%)	21,267
		Sell Price	77,331

MECHANICAL TECHNOLOGY INCORPORATED

PROTOTYPE PLANNING

Process/Planning Sheet

SHEET 1 OF 1

DRAWING NO.	PT.	REV.	PROGRAM
	3.1*		CNG

DESCRIPTION: Induction Motor

MATERIAL

SIZE

QTY ____ LB ____ FT ____

MATERIAL COST PER ____ = ____

FINISH:

MATERIAL COST PER/PC $1,216.94

NOTES:

1) 75 HP 3450 RPM
per 4/12/79 quote

OPER. NO.	OPERATION DESCRIPTION	Tool Description	Tool Cost	Equip. Ref.	Std. Hr.
	Purchase Motor				
	TOTAL				

ALLOWED TIME	
RATE	
D.L. $/PC	

DRAWING NO.

*See Interim Cost Component List, Item Number 3.1, page B-3.

PREPARED BY M. P. Barber

DATE 5/12/79

5.1/6.3

POWER TRANSMISSION SYSTEMS DIVISION

Troy Belting & Supply Company

MEMBER • POWER TRANSMISSION • PTDA DISTRIBUTORS ASSOCIATION

Distributors of Power Transmission Equipment — Electric Motor Service

EASA ELECTRICAL APPARATUS SERVICE ASSOCIATION

LOCATED ON COHOES ROAD AT ELM STREET, WATERVLIET, NEW YORK
P.O. BOX 170 • WATERVLIET, N. Y. 12189 • TELEPHONE (518) 272-4920

April 12, 1979

Mechanical Technology
968 Albany-Shaker Road
Latham, New York 12110

Attention: Mr. Mike Barber

Subject: Motor and Starter Quotation

Dear Mr. Barber:

In accordance with your request, we are pleased to propose the following equipment for your consideration.

1 - U. S. Electric Motor, 75 HP, 3450 RPM, ODP, 364TS Frame, 3/230/460, 1.15 SF, #9415

.....$1,352.16/each

.....$1,216.94/each (for blanket order of 100 pieces)

STARTER

1 - 75 HP, XLB-4DC1-J-R3Q-150M, Siemens-Allis full voltage combination circuit breaker starter, Size 4, 115V coil with adjustable overload relays

.....$ 878.19/each

.....$ 834.28/each (for blanket order of 100 pieces)

1 - U. S. Electric Motor, 3 HP, 3450 RPM, ODP, 145T Frame, 3/230/460

.....$ 120.60/each

.....$ 108.54/each (for blanket order of 100 pieces)

STARTER

1 - 3 HP, XLB-ODC1-J-R1P-15M, Siemens-Allis full voltage combination circuit breaker starter, Size 0, 115V coil with adjustable overload relays.

.....$ 191.00/each

.....$ 181.45/each (for blanket order of 100 pieces)

TERMS: 1% 10 Days Net 30

SHIPMENT: Approximately three to four weeks after receipt of order

FOB: Shipping point prepaid and added

Prices quoted are those in effect today and are for immediate shipment. Invoicing will be based on quoted prices, subject to price changes by the suppliers indicated whose terms are "price in effect at time of shipment".

We appreciate the opportunity of quoting and trust that we will be favored with your order.

Very truly yours,

POWER TRANSMISSION SYSTEMS DIVISION

Troy Belting & Supply Company

William James III
Inside Sales

WJ:dsh
#57-4399

Horizontal Motors

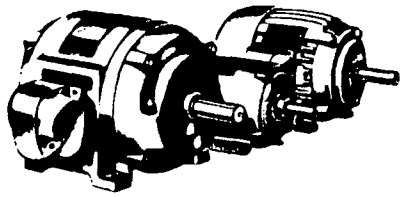

US MOTORS

LIST PRICES

SUPER-STANDARD

NORMAL TORQUE NEMA DESIGN B

3 PHASE•60 HERTZ
40°C.AMBIENT
FLOOR MTD.ASSEMBLIES•F-1 ASSEMBLY

IMPORTANT NOTE: The prices shown on this page apply only to SUPER-STANDARD Motors with the specifications listed. Certain accessories are available at the price additions listed below. For any other deviation whatever, use basic prices listed in Section 202, plus any applicable modifications when confirmed as available.

		UNICLOSED DRIPPROOF				TOTALLY ENCLOSED FAN COOLED			
		TYPES R & D 1.15 SERVICE FACTOR				TYPE T 1.0 SERVICE FACTOR			
HP	RPM	MODEL NO.	LIST PRICE	FRAME	APPROX. SHIPPING WT. LBS.	MODEL NO.	LIST PRICE	FRAME	APPROX. SHIPPING WT. LBS.
30	3600	9011	$ 728	284TS	282	1736	$ 946	286TS	370
	1800	6317	722	286T	230	9520	898	286T	423
	1800	9564	722	286TS	230	9574	898	286TS	423
	1200	8915	1100	326T	496	1748	1540	326T	580
40	3600	9098	964	286TS	310	1744	1245	324TS	515
	1800	4918	908	324T	420	1741	1198	324T	535
	1800	9216	908	324TS	420	9217	1198	324TS	535
50	3600	9009	1188	324TS	410	1746	1662	326TS	590
	1800	4920	1098	326T	468	1742	1524	326T	585
	1800	4922	1098	326TS	485	4105	1524	326TS	585
60	3600	9010	1400	326TS	458	8559	2346	364TS	710
	1800	9418	1380	364T	550	8557	2348	364T	765
	1800	9420	1380	364TS	550	8560	2348	364TS	765
75	3600	9415	1878	364TS	654	8561	3026	365TS	750
	1800	9423	1674	365T	590	8558	2982	365T	790
	1800	9426	1674	365TS	738	8562	2982	365TS	790
100	3600	9416	2512	365TS	730	4238	4082	405TS	1005
	1800	9447	2164	404T	982	4313	3746	405T	1040
	1800	9450	2164	404TS	975	2833	3746	405TS	1040
125	3600	9445	3156	404TS	912	9188	5464	444TS	
	1800	9454	2616	405T	1038	9185	5018	444T	
	1800	9456	2616	405TS	1020	9190	5018	444TS	
150	3600	9446	3838	405TS	1020	9189	6663	445TS	
	1800	2940	3671	444T	1079	9186	5875	445T	
	1800	1205	3671	444TS	1079	9191	5875	445TS	
200	3600	4295	5637	444TS	1079	7170	8782	447TS	
	1800	2941	4728	445T	1235	9220	7358	447T	
	1800	1208	4728	445TS	1235	9221	7358	447TS	
250	3600	9218	6755	445TS	1235				
	1800	7003	5660	445T	1235				
	1800	7004	5660	445TS	1235				

VOLTAGE
Standard voltage for ratings thru 100 horsepower is 230/460 volts: 200 or 575 volt motors are available at the same price. Units over 100 HP are rated 460 volts: 575 volt motors are available at the same price.

ADJUSTABLE MOTOR BASE
Refer to Section 203 or to Office for prices.

Horizontal Motors

Section 205
Page 6

US MOTORS

CUSTOMER NAME			
CUST No.		U.S. No	
MARK:			
QTY	HP	FRAME	PHASE
CYCLE	RPM		VOLTS

DIMENSIONS

UNICLOSED DRIPPROOF TYPE R

Frames 364T - 405TS

FEATURES

STANDARD ASSEMBLY F-1 FRAMES 440 ILLUSTRATED

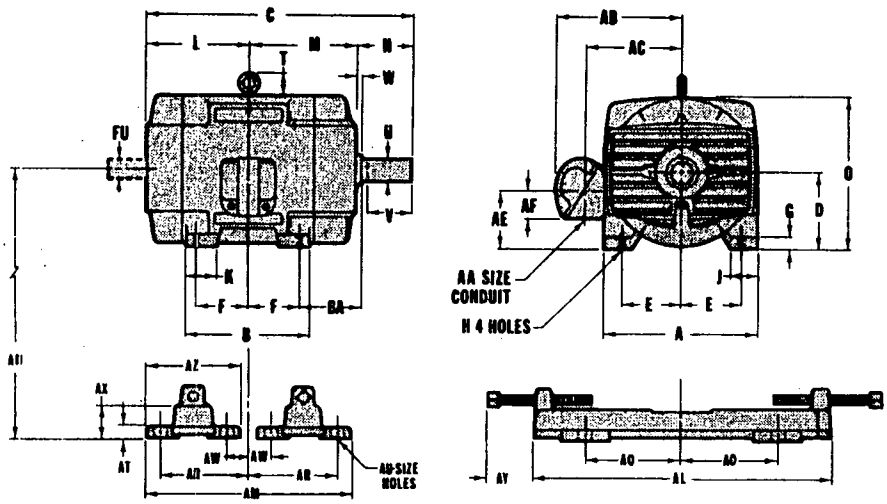

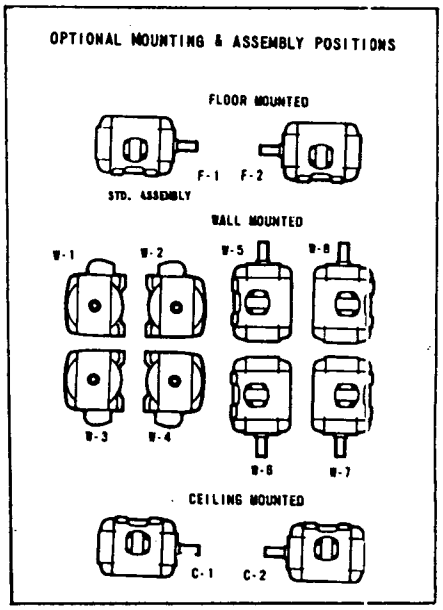

Conduit box can be located on either side and opening may be located in steps of 90° regardless of location. Standard as shown with conduit down.

ALL DIMENSIONS ARE IN INCHES

FRAME	TYPE	A MAX	B MAX	C	D	E	F	G	H SIZE HOLE	J	K	L	M	N	O	T	U	V MIN.	W	AA	AB
364T	R	18	14	28-11/16	9	7	5-5/8	1	21/32	3-7/16	2-3/4	11-5/16	11-1/4	6-1/8	17-3/4	2-1/2	2-3/8	5-5/8	1/4	3	15-5/8
364TS	R	18	14	26-9/16	9	7	5-5/8	1	21/32	3-7/16	2-3/4	11-5/16	11-1/4	4	17-3/4	2-1/2	1-7/8	3-1/2	1/4	3	15-5/8
365T	R	18	15	29-11/16	9	7	6-1/8	1	21/32	3-7/16	2-3/4	11-13/16	11-3/4	6-1/8	17-3/4	2-1/2	2-3/8	5-5/8	1/4	3	15-5/8
365TS	R	18	15	27-9/16	9	7	6-1/8	1	21/32	3-7/16	2-3/4	11-13/16	11-3/4	4	17-3/4	2-1/2	1-7/8	3-1/2	1/4	3	15-5/8
404T	R	20	15	32-9/16	10	8	6-1/8	1	13/16	2-5/8	2-3/4	12-9/16	12-1/2	7-1/2	18-3/4	2-1/2	2-7/8	7	1/4	3	15-5/8
404TS	R	20	16	29-9/16	10	8	6-1/8	1	13/16	2-5/8	2-3/4	12-9/16	12-1/2	4-1/2	18-3/4	2-1/2	2-1/8	4	1/4	3	15-5/8
405T	R	20	16-1/2	34-1/16	10	8	6-7/8	1	13/16	2-5/8	2-3/4	13-5/16	13-1/4	7-1/2	18-3/4	2-1/2	2-7/8	7	1/4	3	15-5/8
405TS	R	20	16-1/2	31-1/16	10	8	6-7/8	1	13/16	2-5/8	2-3/4	13-5/16	13-1/4	4-1/2	18-3/4	2-1/2	2-1/8	4	1/4	3	15-5/8

FRAME	TYPE	AC	AE	AF	AL	AM	AN	AO	AR	AT	AU	AW	AX	AY MAX	AZ	BA	FU	SQ. KEY	TOTAL RAIL ADJUSTMENT	RAIL PART NO.
364T	R	12	9	4	25-1/2	20-1/4	11-1/2	9	9-1/8	1	3/4	2-1/8	2-1/2	7-1/8	9	5-7/8	1-7/8	5/8 x 4-1/4	5-7/8	5318
364TS	R	12	9	4	26-1/2	20-1/4	11-1/2	9	9-1/8	1	3/4	2-1/8	2-1/2	7-1/8	9	5-7/8	1-7/8	1/2 x 2	5-7/8	5318
365T	R	12	9	4	25-1/2	21-1/4	11-1/2	9	9-5/8	1	3/4	2-5/8	2-1/2	7-1/8	9	5-7/8	1-7/8	5/8 x 4-1/4	5-7/8	5318
365TS	R	12	9	4	25-1/2	21-1/4	11-1/2	9	9-5/8	1	3/4	2-5/8	2-1/2	7-1/8	9	5-7/8	1-7/8	1/2 x 2	5-7/8	5318
404T	R	12	10	4	28-1/2	22-3/8	13	10	9-7/8	1	7/8	2-3/8	3	7-5/8	10-1/8	6-5/8	2-1/8	3/4 x 5-5/8	5-13/16	5319
404TS	R	12	10	4	28-1/2	22-3/8	13	10	9-7/8	1	7/8	2-3/8	3	7-5/8	10-1/8	6-5/8	2-1/8	1/2 x 2-3/4	5-13/16	5319
405T	R	12	10	4	28-1/2	23-7/8	13	10	10-5/8	1	7/8	3-1/8	3	7-5/8	10-1/8	6-5/8	2-1/8	3/4 x 5-5/8	5-13/16	5319
405TS	R	12	10	4	28-1/2	23-7/8	13	10	10-5/8	1	7/8	3-1/8	3	7-5/8	10-1/8	6-5/8	2-1/8	1/2 x 2-3/4	5-13/16	5319

Dimension "D" will never be exceeded, but may be less than values shown. Shaft Extension Diameter: +.0000;-.0005 up to 1½" inclu. Larger +.000;-.001. When exact dimensions are required, shims up to 1/16" may be necessary.

All rough casting dimensions may vary by 1/4" due to casting variations.

U. S. ELECTRICAL MOTORS DIVISION
EMERSON ELECTRIC CO.
EMERSON

Effective: December 2, 1974
Supersedes: September 1 1974

If properly endorsed this print is correct for frame & assembly positions indicated.
By_____ Date_____

MECHANICAL TECHNOLOGY INCORPORATED

PROTOTYPE PLANNING

Process/Planning Sheet

SHEET 1 OF 1

DRAWING NO.	PT.	REV.	PROGRAM
	4.4*		CNG

DESCRIPTION: Clutch

MATERIAL

SIZE

QTY LB FT

MATERIAL COST PER =

FINISH:

MATERIAL COST PER/PC $165.00

NOTES:

1) Fluid Actuated Clutch per 3/28/79 quote

OPER. NO.	OPERATION DESCRIPTION	Tool Description	Tool Cost	Equip. Ref.	Std. Hr
	Purchase Clutch				
	TOTAL				

ALLOWED TIME	
RATE	
D.L. $/PC	

DRAWING NO.

PREPARED BY M. P. Barber

DATE 5/1/79

*See Interim Cost Component List, Item Number 4.4, page B-3.

FORMSPRAG COMPANY

A DIVISION OF DANA CORPORATION

P.O. BOX 778 23601 HOOVER ROAD WARREN, MICHIGAN 48090
TELEPHONE (313) 758-5000 TELEX 230-389

Quotation F 26644

Reference Tele. Conversation

Dated 3/28/79

Date March 28, 1979

Mr. Donald Graham
Turbonetics Inc.
968 Albany Shaker Road
Latham, N. Y. 12110

We are pleased to quote on the following:

Quantity	Formsprag Part Number/Product Description	Customer Part Number	Delivery (in weeks)*	Unit Price** Ea. Net OEM
5	Fluid Actuated Disc Clutches RO-450/1.000" Bore		12-14	$ 183.00
50-99	" " "		18-20	$ 170.00
100 & Up	" " "		18-20	$ 165.00

*Delivery as quoted begins upon receipt of complete information necessary for manufacture and upon acceptance of your firm order by our Company. Delivery projection does not include shipping time.

**The unit price applies only for the quantity quoted. If other quantities are required, contact your Formsprag representative.

Please note the "Terms and Conditions" on the reverse side.

Sincerely,

FORMSPRAG COMPANY

Robert L. Giggey (emm)

Robert L. Giggey, District Manager
for John McMurray, Sales Engr. - N. Y.

Formsprag DANA

FORM NO. 650-77 5/76

4.4

RO DIMENSIONAL AND TECHNICAL DATA

Bearingless, rotating cylinder, through-the-shaft actuation

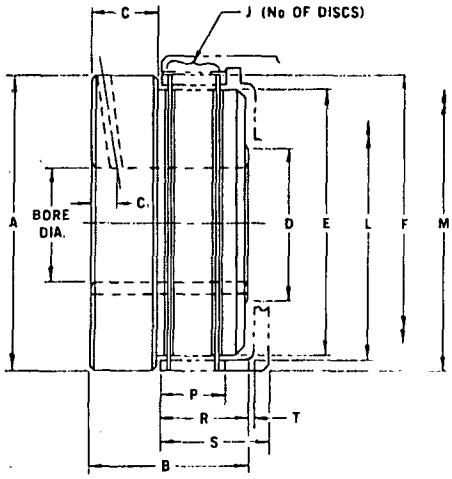

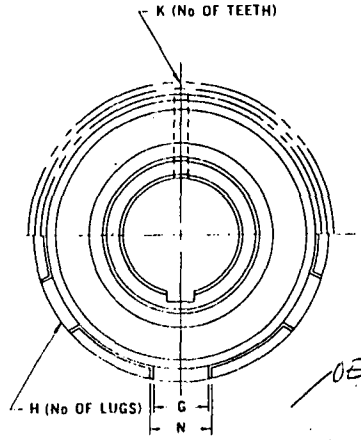

OEM

$185.00 Dell 12-14 wbs
5 pro $170.00 " 18 20
50-99 $165

SELECTION DATA							
Model Number		300	350	450	550	600	700
(1) Torque lb.-ft. @ PSI		35 @ 100	78 @ 100	139 @ 100	371 @ 100	340 @ 100	625 @ 100
		157 @ 300	301 @ 300	578 @ 300	1266 @ 300	1448 @ 300	2446 @ 300
		280 @ 500	525 @ 500	1018 @ 500	2160 @ 500	2548 @ 500	4268 @ 500
Maximum r.p.m.		6000	4800	4300	3300	3300	2500
Weight (lb.)		3.5	5	9	16	20	29
Standard Bores (+ .001 / − .000) & Keyseats		1.125, 1.000 ¼ x ⅛; .875 3/16 x 3/32	1.375 5/16 x 3/32; 1.250, 1.125 ¼ x ⅛	1.750, 1.625, 1.500 3/8 x 3/16; 1.375 5/16 x 5/32	2.250 ½ x 3/16; 2.000, 1.875 ½ x ¼; 1.750 3/4 x 3/16	2.500, 2.375 5/8 x 5/16; 2.250 ½ x ¼	3.000 3/4 x ¼; 2.750, 2.625, 2.500 5/8 x 5/16
Bore Range (No Keyseat)	Min.	.750	1.000	1.250	1.500	1.500	1.750
	Max.	1.375	1.500	2.000	2.375	2.750	3.250
DIMENSIONAL DATA							
A Body O.D.	±.015	3.375	3.812	4.875	6.000	6.562	7.625
B Axial Length	±.015	1.880	*2.0075	2.320	2.745	2.780	*3.1325
C Cylinder Width	±.005	.845	.845	.965	1.000	1.062	1.140
C_1 Port Location (Respective to Standard Bores Above)		.370	.354	.452	.515	.543	.591
		.382	.364	.462	.537	.553	.610
		.394	.373	.476	.547	.563	.625
		—	—	.486	.559	—	.645
D Hub O.D.	±.015	1.875	2.000	2.750	3.125	3.625	4.000
DISC DATA							
E Disc O.D.	±.005	3	3½	4½	5½	6	7
F Lug O.D.	±.008	3 5/16	3 13/16	4⅞	6	6 9/16	7⅝
G Lug Width	±.002	.734	.734	.796	.609	.609	.734
H No. of Lugs		6	6	6	12	12	12
J No. of Discs		6	6	6	6	6	6
K No. of Teeth		33	38	48	58	63	73
DRIVE CUP DATA							
L Cup I.D.	±.005	3.062	3.562	4.562	5.562	6.062	7.062
M Cup O.D.	±.010	3.310	3.880	4.880	5.940	6.560	7.690
N Slot Width	±.002	.750	.750	.812	.625	.625	.750
P Slot Depth	±.010	.840	.890	1.000	1.270	1.280	1.410
R Cup Mounting	±.015	.977	1.065	1.245	1.562	1.575	1.775
S Cup Length	±.010	1.250	1.380	1.650	1.960	2.050	2.220
T Nominal Gap		.093	.095	.125	.089	.095	.065
Minimum Cup Bore		1.000	1.000	1.000	1.500	2.000	2.000

1. Minimum static wet torque @ 0 rpm [dynamic (starting) torque is 75.6% of static (running) torque]
2. All dimensions in inches
3. Disc teeth—10/12 D.P. @ 20° P.A.
4. Use tooth discs for pressures above 200 psi
5. For running torques at other pressures see page 8

* Axial length tolerance ± .0075

Metric conversion: 1 lb-ft = .1383 kg-m
1 in = 2.54 cm
1 psi = 7.03 × 10⁻² kg/cm²

MECHANICAL TECHNOLOGY INCORPORATED

PROTOTYPE PLANNING

Process/Planning Sheet

SHEET 1 OF 1

DRAWING NO.	PT.	REV.	PROGRAM
	6.4*		CNG

DESCRIPTION: Feedwater Pump

MATERIAL

SIZE

QTY LB FT

MATERIAL COST PER =

FINISH:

MATERIAL COST PER/PC $256.80

NOTES:

1) Pump per 11/1/78 price list

OPER. NO.	OPERATION DESCRIPTION	Tool Description	Tool Cost	Equip. Ref.	Std. Hr
	Purchase Pump				
	TOTAL				

ALLOWED TIME	
RATE	
D.L. $/PC	

DRAWING NO.

*See Interim Cost Component List, Item Number 6.4, page B-4.

PREPARED BY M. P. Barber

DATE 6/3/79

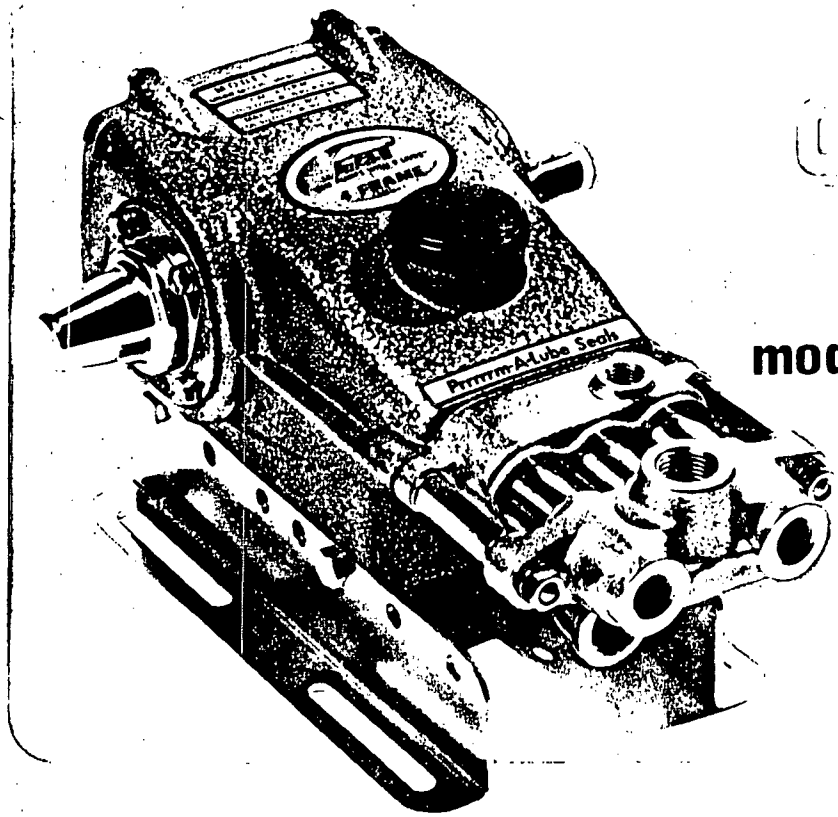

CAT SERIES

model 330

4 FRAME

403 Pump
25 Mfg
428 Disc 40% = 256.80

SPECIFICATIONS

	U.S. Measure	Metric
VOLUME	Up to 4 GPM	(15.1 L/Min.)
DISCHARGE PRESSURE	Up to 1200 PSI	(84 kg/cm²)
INLET PRESSURE	-8.5 to +40 PSI	(-0.6 to +2.8 kg/cm²)
RPM	1070 RPM	1070 RPM
CRANKCASE CAPACITY	1-1/4 Pts.	(0.6 L)
MAXIMUM FLUID TEMPERATURE	180° F.	(82° C)
INLET PORTS (2)	(1) 1/4 In. NPT; (1) 1/2 In. NPT	(1) 1/4 In. NPT; (1) 1/2 In. NPT
DISCHARGE PORTS (3)	(2) 3/8 In. NPT; (1) 1/2 In. NPT	(2) 3/8 In. NPT; (1) 1/2 In. NPT
PULLEY MOUNTING	Either Side	Either Side
SHAFT DIAMETER	0.650 In.	(16.5 mm)
WEIGHT: Without Pulley & Mounting Rails	17.6 lbs.	(8 kg)

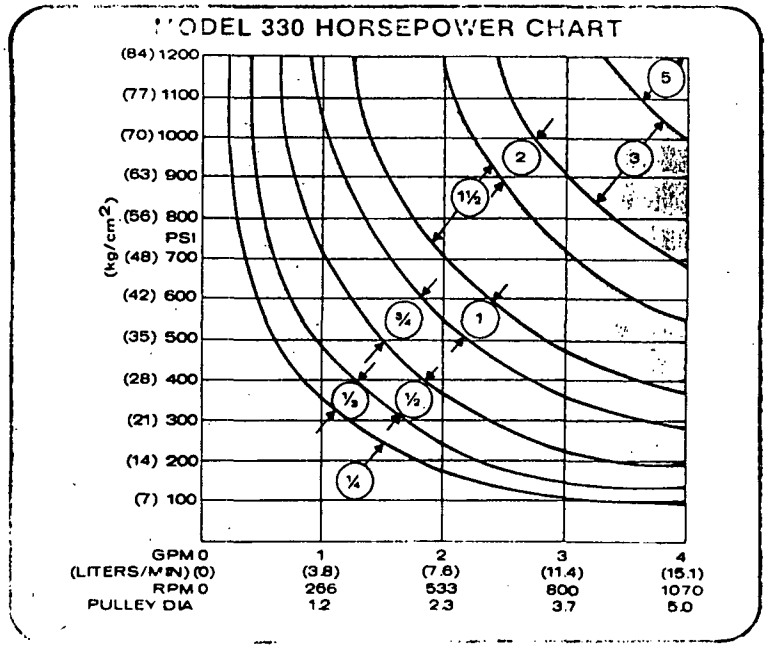

DESIGN: Triplex, Uniflow Design with floating pistons and wet viton cups. Pumped fluids lubricate and cool piston cups. Positive displacement, mechanically actuated inlet valves. Stainless steel discharge valve seats and spring loaded poppet valves. Two inlet ports; three discharge ports. Oil bath crankcase lubrication.

CONSTRUCTION: Wear surfaces of pumping section are hard chrome plated stainless steel; other parts are stainless steel and brass or chrome plated brass. Stepped, stainless steel piston rods have mirror-finish sleeves, Buna N garter type spring-loaded crankcase seal. Inlet seals are Cat Pump Prrrrm-a-lube type. No external lubrication now required. Die-cast aluminum alloy crankcase. Die-cast connecting rods. Forged chrome-moly steel crankshaft turns on heavy-duty ball bearings. In fifteen minutes and at low cost, the pumping section may be rebuilt without disassembly of the crankcase.

MAINTENANCE: Recommended maintenance is this simple: change crankcase oil every 500 hours or every three months, whichever comes sooner, using Cat Pumps Crankcase Oil or an equivalent SAE 30 with additives. Maintenance Monitor twice a year. That's it!

THE POWER WE'RE MADE LIVES

WORLD LEADER IN TRIPLEX HIGH PRESSURE PUMPS

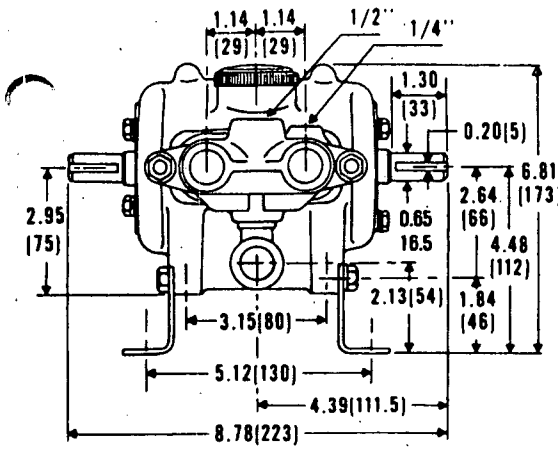

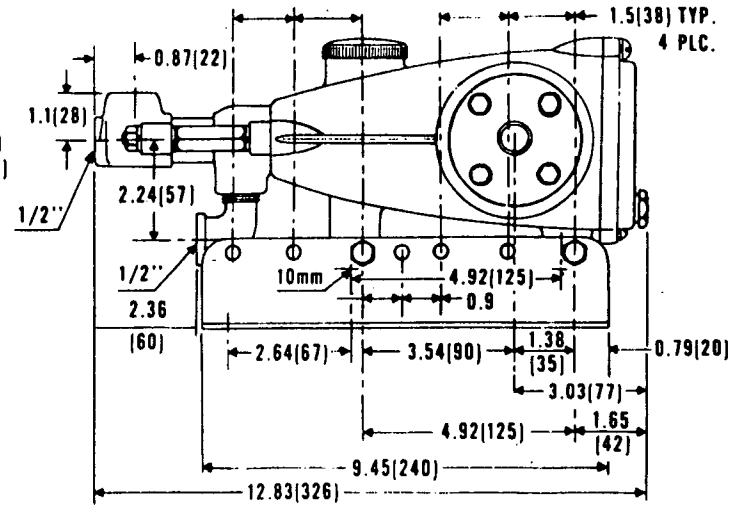

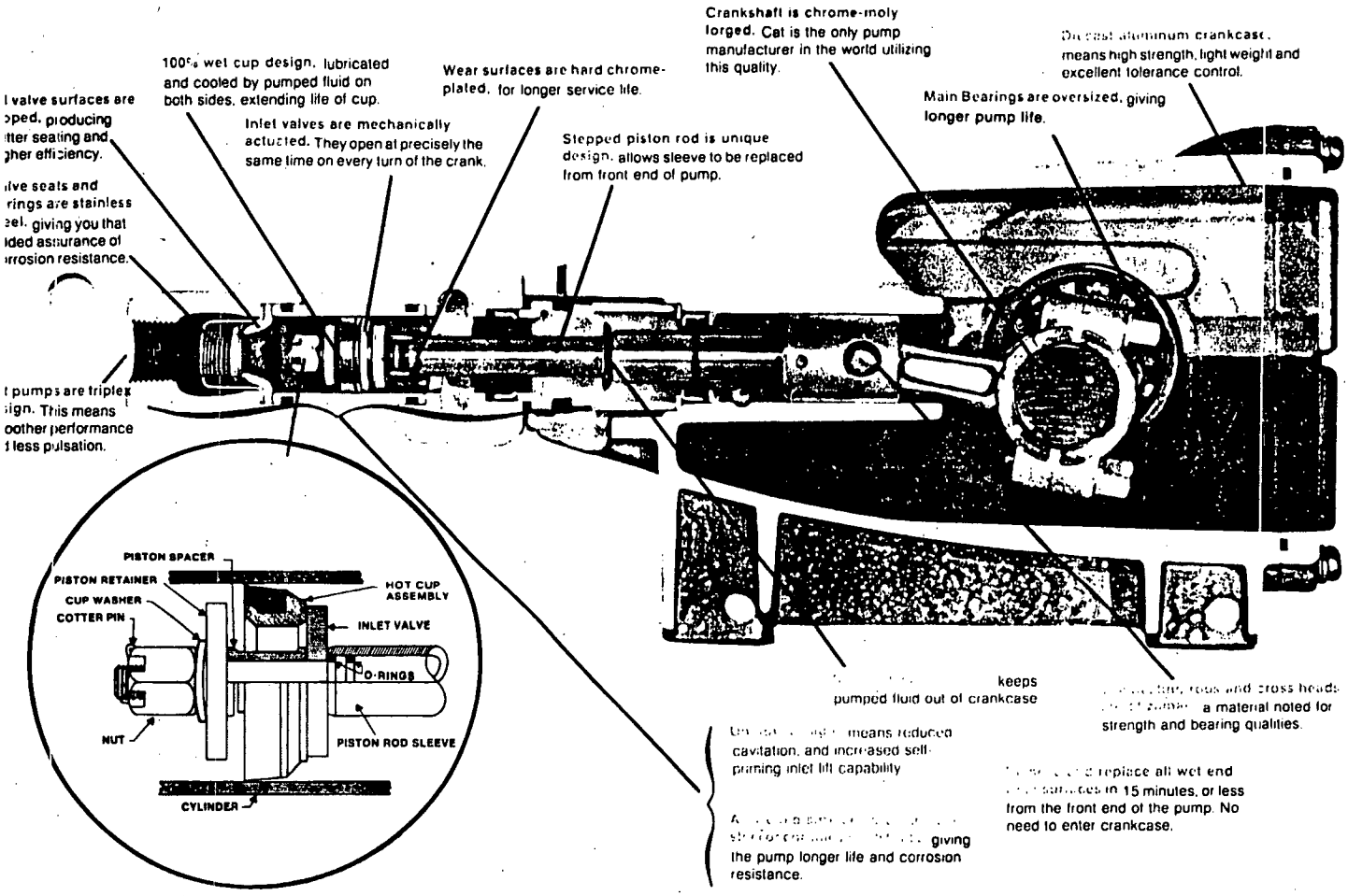

Products described hereon are covered by one or more of the following U.S. patents: 3558244, 3652188, 3809508, 3920356, and 3930756.

AT UMPS INTERNATIONAL SA
Harmoniestraat 29
B-2000 Antwerp, Belgium

CAT PUMPS DEUTSCHLAND GmbH
Rostocker Strasse 9
6200 Wiesbaden-Bierstadt
West Germany

CAT PUMPS (U.K.) LTD.
17A Kings Road
Fleet
Hampshire GU13 9AA
England

CORPORATION
1600 FREEWAY BOULEVARD N. MINNEAPOLIS, MN 55430
Phone (612) 566-1212 • Telex 29-0276

itho in U.S.A.
CPS 377-330-10M

PUMP MODEL		INDUSTRIAL USER NET
WILDCAT		
Model 20 w/Bracket	3 GPM 600 PSI	140.00
BOBCAT		
Model 280 only	3 GPM 700 PSI	285.00
Model 281 only	Stainless Steel	692.00
Model 284 only	.6 GPM 3000 PSI	661.00
COUGAR		
Model 330 only	4 GPM 1200 PSI	403.00
*Model 338 w/COMPLETE (BOX) ASSEMBLY		428.00
*Model 339 w/COMPLETE (ANGLE)ASSEMBLY		428.00
Model 331 only	Stainless Steel	797.00
Model 335 only	P.P. Manifold	462.00
Model 430 only	5 GPM 800 PSI	386.00
*Model 438 w/COMPLETE (BOX) ASSEMBLY		411.00
*Model 439 w/COMPLETE (ANGLE) ASSEMBLY		411.00
Model 431 only	Stainless Steel	777.00
Model 435 only	P.P. Manifold	429.00
LEOPARD		
Model 520 only	5 GPM 1700 PSI	792.00
Model 521 only	Stainless Steel	1,169.00
Model 524 w/DM,SP,O.	4.5 GPM 2150 PSI	668.00
Model 620 only	6 GPM 1200 PSI	662.00
*Model 629 w/COMPLETE (ANGLE) ASSEMBLY		738.00
Model 621 only	Stainless Steel	1,219.00
Model 624 only	3 GPM 3000 PSI	1,205.00
Model 625 only	P.P. Manifold	740.00
Model 820 only	10 GPM 1000 PSI	662.00
Model 821 only	Stainless Steel	1,219.00
Model 825 only	P.P. Manifold	740.00
Model 1010 only	12 GPM 700 PSI	662.00
Model 1011 only	Stainless Steel	1,219.00
Model 1015 only	P.P. Manifold	740.00
JAGUAR		
Model 1020 only	10 GPM 1200 PSI	1,610.00
Model 1021 only	Stainless Steel	2,875.00
Model 1024 only	6 GPM 3000 PSI	2,690.00
Model 1025 only	P.P. Manifold	1,660.00
Model 1044 only	10 GPM 2000 PSI	2,690.00
Model 1520 only	15.1 GPM 1000 PSI	1,610.00
Model 1521 only	Stainless Steel	2,875.00
Model 1525 only	P.P. Manifold	1,660.00
Model 2020 only	20.1 GPM 800 PSI	1,610.00
Model 2021 only	Stainless Steel	2,875.00
Model 2025 only	P.P. Manifold	1,660.00
Model 2520 only	25.9 GPM 700 PSI	1,610.00
Model 2521 only	Stainless Steel	2,875.00
Model 2525 only	P.P. Manifold	1,660.00
PANTHER		
Model 6020 w/Mtg.	60 GPM 1000 PSI	3,500.00
Model 6021 w/Mtg.	Stainless Steel	4,670.00
Model 6024 w/Mtg.	12 GPM 5000 PSI	6,150.00
Model 6024 w/Mtg.	Stainless Steel	7,260.00
Model 6044 w/Mtg.	20 GPM 3000 PSI	6,150.00
Model 6044 w/Mtg.	Stainless Steel	7,260.00

UAL PRICING FOR BLUE DOT OR PRRRRM-A-LUB
ALS ON MODELS 280, 330, 430 and 10 FRAME

UNCHROMED, VITON OR V-HOT CUP CONFIGURATIONS--ADDITIONAL 10% OF STD. PUMP

COMPLETE ASSEMBLY includes Angle (Box) Rail, Pulley Assembly, Shaft Protector and Oil.

PUMP MOUNTING AND DRIVE ACCESSORIES

EFFECTIVE NOVEMBER 1, 1978

		INDUSTRIAL USER NET
WILDCAT		
29690	Bracket Mtg. w/Pump	4.55
30632	Flex Coup & Key Assy	22.10
30634	3-1/2" Pulley & Key Assy.	4.55
06103	Oil (3 oz.)	1.10
BOBCAT		
30612	Angle Mtg.(5/16)U.S.	9.80
30246	5" Pulley, Set Screw, & Key Assy.	7.85
25130	Shaft Protector	2.15
06101	Oil (21 oz.)	2.15
COUGAR		
30241	Box Mtg.	14.50
30611	Angle Mtg.(5/16)U.S.	11.50
30243	Direct Mtg.	5.20
30616	Bolt Mtg.(5/16)U.S.	1.80
30244	8" Pulley, Set Screw, & Key Assy.	9.20
25130	Shaft Protector	2.12
06101	Oil (21 oz.) (1)	2.15
LEOPARD		
30613	Angle Mtg. (3/8) U.S.	24.40
30264	Direct Mtg.	6.40
30615	Bolt Mtg.(3/8) U.S.	2.00
30267	9.75" Sheave, Hub, & Key Assy.	44.15*
30284	Hub & Key Assy.	7.75
25131	Shaft Protector	3.25
06101	Oil (21 oz.) (2)	2.15
JAGUAR		
30268	Angle Mtg.	42.60
30269	9.75" Sheave, Hub, & Key Assy.	44.15*
30285	Hub & Key Assy.	7.70*
26516	Shaft Protector	5.40
06101	Oil (21 oz.) (4)	2.15
30278	Oilers w/Pump (3)	21.55
PANTHER		
29477	Rail w/Pump (2)	69.00
30636	Hub & Key Assy.	46.15
29445	Shaft Protector	28.45
06101	Oil (21 oz.) (14)	2.15
30429	Oilers w/Pump (3)	30.20
		LIST

*CHANGED PER PARTS UPDATE 12/29/78

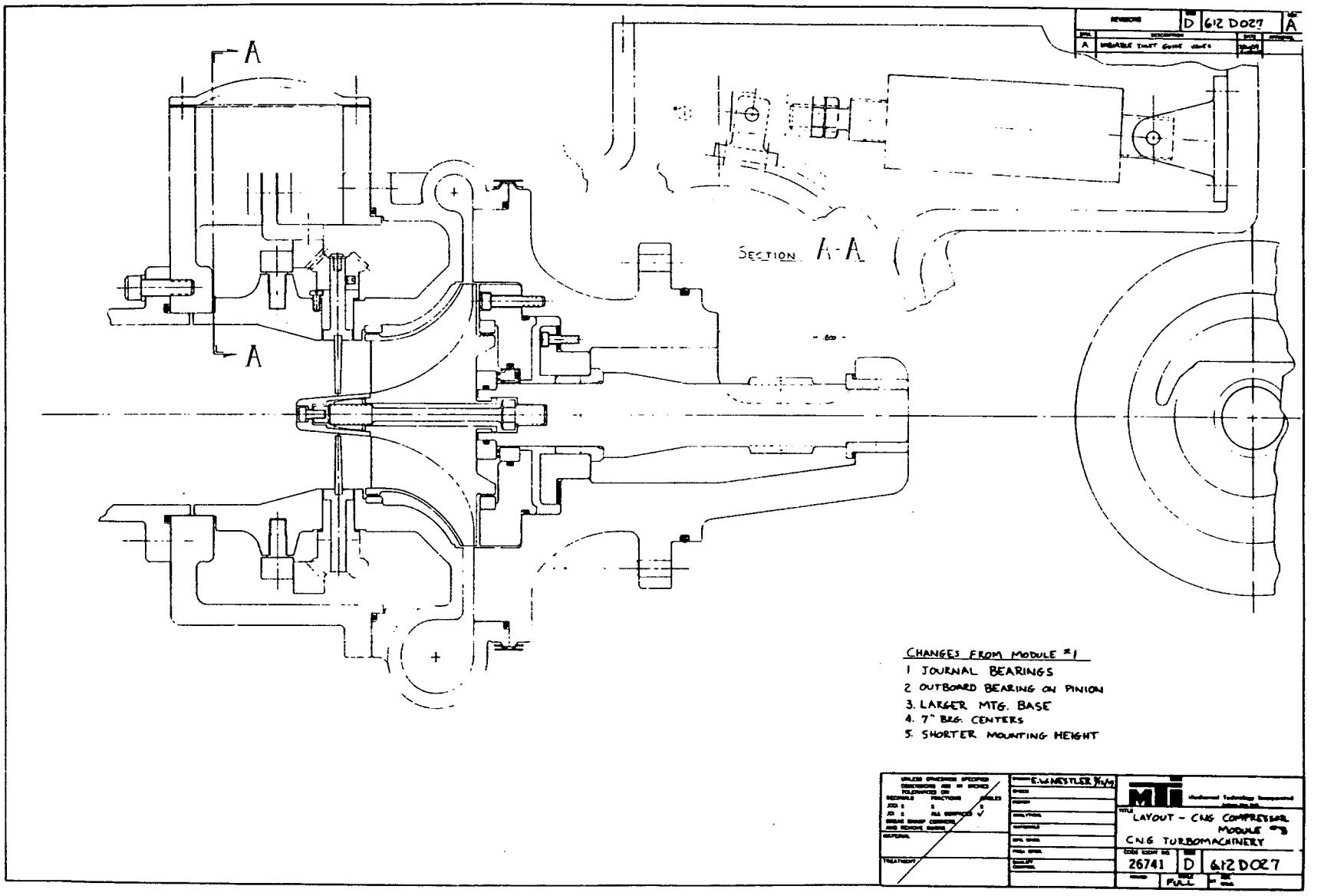

30074

MECHANICAL TECHNOLOGY INCORPORATED

MECHANICAL TECHNOLOGY INCORPORATED

PROTOTYPE PLANNING

Process/Planning Sheet

SHEET 1 OF 2

DRAWING NO.	PT.	REV.	PROGRAM
612D027		8.1	

DESCRIPTION: Compressor Casing

MATERIAL: Cast Iron

SIZE: as cast

QTY: 1 LB: 50 FT:

MATERIAL COST PER: .95 = $48.00

FINISH:

MATERIAL COST PER/PC: $48.00

NOTES:

OPER. NO.	OPERATION DESCRIPTION	Tool Description	Tool Cost	Equip Ref	Std Hr
5	Chuck large end				
	Turn rabbit				
	Face to rabbit				
	Turn O-ring				
	Bore rear bearing				.27
10	Chuck small end				
	Face				
	Turn O.D.				
	Turn rabbit				
	Bore cavity				
	Rough bore bearings				
	Finish bore bearings				.73
	TOTAL				

ALLOWED TIME	
RATE	
D.L. $/PC	

DRAWING NO. 612D027

PREPARED BY P.D.

DATE 8/1/79

79934

MECHANICAL TECHNOLOGY INCORPORATED

PROTOTYPE PLANNING

SHEET 2 OF 2

DRAWING NO.	PT.	REV.	PROGRAM
612D027	8.1		

DESCRIPTION
Compressor Casing

MATERIAL
SIZE
QTY LB FT
MATERIAL COST PER =
FINISH:

MATERIAL COST PER/PC

NOTES:

OPER. NO.	OPERATION DESCRIPTION	Tool Description	Tool Cost	Equip Ref	Std. Hr
15	Fixture rabbit				
	Drill				.17
20	Fixture rabbit				
	Tap cavity holes				.45
25	Bench				.25
30	Inspect				.25
	TOTAL				2.12
			ALLOWED TIME		2.2
			RATE 30		
			D.L. $/PC		66

DRAWING NO. 612D027

PREPARED BY D/B

DATE 8/1/79

79934

MECHANICAL TECHNOLOGY INCORPORATED

PROTOTYPE PLANNING

Process/Planning Sheet

SHEET 1 OF 1

DRAWING NO.	PT.	REV.	PROGRAM
612D027	8.2		

DESCRIPTION: Compressor Wheel

MATERIAL: Precision Casting

SIZE: as cast

QTY: ____ LB: ____ FT: ____

MATERIAL COST PER: ea. : $150.00

FINISH:

MATERIAL COST PER/PC: $150.00

NOTES:

OPER. NO.	OPERATION DESCRIPTION	Tool Description	Tool Cost	Equip Ref	Std Hr
	Manufacturing hours based upon				
	actual cycle of a currently produced				
	wheel at Turbonetics adjusted for				
	high volume production				
	TOTAL				2.27
	ALLOWED TIME				2.3
	RATE 30				
	D.L. $/PC				69

DRAWING NO. 612D027

PREPARED BY OD

DATE 8/1/79

79934

MECHANICAL TECHNOLOGY INCORPORATED

PROTOTYPE PLANNING

Process/Planning Sheet

SHEET 1 OF 2

DRAWING NO.	PT.	REV.	PROGRAM
612D027	8.6		

DESCRIPTION: Compressor Volute

MATERIAL: Cast Iron

SIZE: as cast

QTY: 1 LB: 50 FT:

MATERIAL COST PER: .95 = $48.00

FINISH:

MATERIAL COST PER/PC: $48.00

NOTES:

OPER. NO.	OPERATION DESCRIPTION	Tool Description	Tool Cost	Equip. Ref.	Std. Hr.
5	Chuck front end				
	Machine face, bore, O-ring of flange				
	Bore for wheel				
	Bore for seal				
	Bore front lip				.42
10	Chuck back end				
	Face, turn O.D. at bore				
	Face, turn O.D. of volute, O-ring				
	Face, turn, bore IGV end				
	Contour venturi				.84
15	Fixture				
	Drill				.23
		TOTAL			

ALLOWED TIME	
RATE	
D.L. $/PC	

DRAWING NO. 612D027

PREPARED BY D/J

DATE 8/1/79

79934

MECHANICAL TECHNOLOGY INCORPORATED

PROTOTYPE PLANNING

SHEET 2 OF 2

DRAWING NO.	PT.	REV.	PROGRAM
612D027	8.6		

DESCRIPTION: Compressor Volute

MATERIAL

SIZE

QTY ____ LB ____ FT ____

MATERIAL COST PER ____ = ____

FINISH:

MATERIAL COST PER/PC

NOTES:

OPER. NO.	OPERATION DESCRIPTION	Tool Description	Tool Cost	Equip. Ref.	Std. Hr.
17	Fixture				
	Drill IGV holes				
	Tap roller holes				.63
20	Bench				.25
25	Inspect				.25
	TOTAL				2.63
			ALLOWED TIME		2.7
			RATE 30		
			D.L. $/PC		81

DRAWING NO. 612D027

PREPARED BY DB

DATE 7/11/79

79934

MECHANICAL TECHNOLOGY INCORPORATED

PROTOTYPE PLANNING

Process/Planning Sheet

SHEET 1 OF 1

DRAWING NO.	PT.	REV.	PROGRAM
612D027	8.7		

DESCRIPTION: IGV Casing

MATERIAL: Cast Iron

SIZE: as cast

QTY: 1 LB: 30 FT:

MATERIAL COST PER: .95 = $29.00

FINISH:

MATERIAL COST PER/PC: $29.00

NOTES:

OPER. NO.	OPERATION DESCRIPTION	Tool Description	Tool Cost	Equip Ref	Std Hr.
5	Chuck front end				
	Face, rabbit volute mount				
	Bore front face				.21
10	Fixture				
	Mill cover face				
	Drill & tap cover face				.11
15	Fixture				
	Drill				.52
20	Bench				.13
25	Inspect				.13
	TOTAL				1.10
			ALLOWED TIME		1.1
			RATE	30	
			D.L. $/PC		33

DRAWING NO. 612D027

PREPARED BY OB

DATE 8/1/79

79934

MECHANICAL TECHNOLOGY INCORPORATED

PROTOTYPE PLANNING

Process/Planning Sheet

SHEET 1 OF 1

DRAWING NO.	PT.	REV.	PROGRAM
612D027	8.8		

DESCRIPTION: Compressor Vanes

MATERIAL: Precision Casting

SIZE: as cast

QTY: 9 LB: FT:

MATERIAL COST PER: ea. : $2.75

FINISH:

MATERIAL COST PER/PC: $25.00/Set of 9

NOTES:

OPER. NO.	OPERATION DESCRIPTION	Tool Description	Tool Cost	Equip. Ref.	Std. Hr.
5	Chuck				
	Turn Stem				
	Face				.10
10	Fixture				
	Drill pin hole				.05
					.15 ea.
					x 9
	TOTAL				1.35
			ALLOWED TIME		1.4
			RATE 30		
			D.L. $/PC		42

DRAWING NO. 612D027

PREPARED BY B/J

DATE 8/1/79

79934

MECHANICAL TECHNOLOGY INCORPORATED

PROTOTYPE PLANNING

Process/Planning Sheet

SHEET 1 OF 2

DRAWING NO.	PT.	REV.	PROGRAM	NOTES:
612D027	8.9			

DESCRIPTION: Compressor Assembly

MATERIAL

SIZE

QTY ____ LB ____ FT ____

MATERIAL COST PER ____ = ____

FINISH:

MATERIAL COST PER/PC

OPER. NO.	OPERATION DESCRIPTION	Tool Description	Tool Cost	Equip Ref	Std. Hr.
5	Assemble to shaft				---
	Thrust bearing				.03
	Rear bearing				.03
	Shims				.03
	Assemble shaft in housing				.17
	Assemble thrust ring				.08
	Assemble shaft				.02
	Shaft seal				---
	Wheel seal				.02
	Tie bolt				.02
	Wheel				.08
	Seal ring				.02
	Assemble				---
	Seal in volute				.05
	IGV in volute				.52
	Gears in ring				.03
	TOTAL				

DRAWING NO. 612D027

PREPARED BY D/B

DATE 8/1/79

ALLOWED TIME	
RATE	
D.L. $/PC	

79934

MECHANICAL TECHNOLOGY INCORPORATED

PROTOTYPE PLANNING

SHEET 2 OF 2

DRAWING NO.	PT.	REV.	PROGRAM
612D027	8.9		

DESCRIPTION: Compressor Assembly

MATERIAL

SIZE

QTY ____ LB ____ FT ____

MATERIAL COST PER ____ = ____

FINISH:

MATERIAL COST PER/PC

NOTES:

OPER. NO.	OPERATION DESCRIPTION	Tool Description	Tool Cost	Equip Ref	Std. Hr.
	Rollers on volute				.38
	Assemble IGV casing to volute				.08
	Gear drive to gear				.08
	Oil wash				.17
	Low speed spin test				.33
	Clean & wash				.17
	Cover & paint				.17
	Inspect				.17
	TOTAL				2.65
			ALLOWED TIME		2.7
			RATE 30		
			D.L. $/PC		81

DRAWING NO. 612D027

PREPARED BY AB

DATE 8/1/79

79934