ENERGY

CONSERVATION

ORNL/Sub/80-13836/1&02

Assessment of Internal Combustion Engines as Drivers for Heat Pumps

Final Report

Report Prepared by

Arthur D. Little, Inc.
32 Acorn Park
Cambridge, Massachusetts 01240

under

Subcontract 62B-13836C, Letter Release 62X-02

for

Oak Ridge National Laboratory
Oak Ridge, Tennessee 37830
operated by
UNION CARBIDE CORPORATION
for the
U.S. DEPARTMENT OF ENERGY
under Contract No. W-7405-eng-26

Printed in the United States of America. Available from
National Technical Information Service
U.S. Department of Commerce
5285 Port Royal Road, Springfield, Virginia 22161
NTIS price codes—Printed Copy: A05; Microfiche A01

This report was prepared as an account of work sponsored by an agency of the United States Government. Neither the United States Government nor any agency thereof, nor any of their employees, makes any warranty, express or implied, or assumes any legal liability or responsibility for the accuracy, completeness, or usefulness of any information, apparatus, product, or process disclosed, or represents that its use would not infringe privately owned rights. Reference herein to any specific commercial product, process, or service by trade name, trademark, manufacturer, or otherwise, does not necessarily constitute or imply its endorsement, recommendation, or favoring by the United States Government or any agency thereof. The views and opinions of authors expressed herein do not necessarily state or reflect those of the United States Government or any agency thereof.

ORNL/Sub/80-13836/1&02
Dist. Category UC-95d

ASSESSMENT OF INTERNAL COMBUSTION ENGINES AS DRIVERS FOR HEAT PUMPS

FINAL REPORT

Date Published: January 1984

Report Prepared by

Arthur D. Little, Inc.
Acorn Park
Cambridge, Massachusetts 01240
Under
Subcontract 62B-13836C, Letter Release 62X-02

for

Oak Ridge National Laboratory
Oak Ridge, Tennessee 37830
operated by
UNION CARBIDE CORPORATION
for the
U.S. DEPARTMENT OF ENERGY
Under Contract No. W-7405-eng-26

TABLE OF CONTENTS

		Page
I.	SUMMARY	1
	A. BACKGROUND	1
	B. RESULTS	1
	C. CONCLUSIONS	4
	D. RECOMMENDATIONS	7
II.	INTRODUCTION	8
III.	PRIOR EXPERIENCE WITH SMALL I.C. ENGINES IN LONG LIFE APPLICATIONS (TASK 1.0)	9
	A. OVERVIEW	9
	B. HEAT PUMP/AIR CONDITIONING APPLICATIONS	9
	C. TOTAL ENERGY SYSTEMS	14
	D. OTHER APPLICATIONS	15
IV.	CURRENT ENGINE CHARACTERISTICS (TASK 2.0)	17
	A. OVERVIEW	17
	B. OVERALL ENGINE CHARACTERISTICS	17
	C. FEATURES FOR LONG LIFE AND LOW MAINTENANCE	22
	D. COST AND PERFORMANCE ESTIMATES FOR CONCEPTUAL DESIGN STUDIES	23
V.	CONCEPTUAL DESIGN (TASK 3.0)	30
	A. OVERVIEW	30
	B. SYSTEM DESIGN DEFINITION	30
	C. CAPITAL AND MAINTENANCE COSTS	32
	D. PERFORMANCE ANALYSIS	33
	E. ECONOMIC RESULTS	49
	F. INSTITUTIONAL/OPERATIONAL FACTORS	52
	G. OVERALL EVALUATION	53
	H. KEY AREAS OF UNCERTAINTY	54

TABLE OF CONTENTS (Cont'd.)

	Page
VI. DEVELOPMENT PROGRAM OPTIONS (TASK 4.0)	55
A. RATIONALE FOR I.C. ENGINE HEAT PUMP DEVELOPMENT PROGRAMS	55
B. OVERALL PROGRAM PLAN	55
C. SYSTEM DEMONSTRATION	57
D. ANNUAL PERFORMANCE SIMULATIONS	59
E. PRODUCTION/INSTALLATION COST PROJECTIONS	61
F. MARKET ANALYSIS/INSTITUTIONAL ISSUES	62
G. PROGRAM SCHEDULES AND COST	62
VII. REFERENCES	65

LIST OF TABLES

Table No.		Page
1	Typical Economic Payback Results	6
2	General Characteristics of Selected Engines	18
3	Preliminary Engine Cost Trade-Offs	21
4	Engine First Cost and Annual Maintenance Estimates	25
5	Generic Maintenance Requirements of Diesel and Natural Gas Engines	26
6	Predicted Diesel Fuel Consumption and Efficiency	27
7	Overall First Costs and Annual Maintenance Cost Estimates for I.C. Engine Heat Pump Systems and Conventional Systems	34
8	Estimated Overall Incremental Ownership Costs	35
9	Residential Space Heat Results Effect of Location and Furnace Efficiency	45
10	Knoxville Parametric Studies	46
11	Comparison of Incremental Ownership Costs with Energy Savings	50
12	Simple Payback	51

LIST OF FIGURES

Figure No.		Page
1	I.C. Engine Driven Heat Pump	2
2	I.C. Engine-Driven Heat Pump Heating Performance	3
3	I.C. Engine-Driven Heat Pump Cooling Performance	5
4	Characteristic Engine Efficiencies	29
5	Block Diagram for I.C. Engine-Driven Heat Pump	31
6	Performance Analysis Methodology	36
7	Heat Pump Performance	38
8	Relationship of System Thermal COP to Heat Pump and Engine Characteristics	39
9	System Thermal Heating COP	40
10	Typical System Performance Map	42
11	Part Load Performance	43
12	Annual Energy Savings of an I.C. Engine Heat Pump Space Heat System Relative to Fossil Furnaces of Varying Efficiencies	47
13	I.C. Engine Heat Pump Development Program Options	56
14	Program Schedules	58
15	Market Assessment Methodology	63

ABSTRACT

The present suitability and future potential of internal combustion engines as drivers for heat pumps was assessed for residential and light commercial machines up to 100 KW output (or approximately 50 HP input). This assessment included: a review of prior I.C. engine experience in similar applications; the determination of current engine characteristics important to heat pump systems; a conceptual design and evaluation of system economic potential and operational features; and recommended options for further development.

The study showed that the internal combustion driven heat pump is technically feasible with current engine technology and that economic potential is promising for larger sizes. Developmental options recommended include: system demonstration, annual performance simulation, production cost projections and market analysis.

I. SUMMARY

A. BACKGROUND

The Department of Energy is sponsoring a variety of programs directed toward development of fossil fuel-fired heat pumps. These systems, if successful, can result in substantial energy savings relative to conventional heating and cooling equipment. Currently, the work in the United States, while spaning a broad range of technology, does not include any programs involving the use of conventional I.C. engines as heat pump drivers, although I.C. engine heat pump systems could provide a near term approach with minimal development if issues regarding cost, maintenance and noise can be satisfactorily resolved.

The objective of this program is to assess the present suitability and future potential of gas-fired and oil-fired I.C. engines for use in heat actuated heat pumps for space conditioning applications. Results of this study will be used as a resource in future program planning and will include the definition of R&D tasks that could be undertaken to improve the suitability of I.C. engine heat pump applications. The study will focus on drives for residential and light commercial machines up to 100 KW output.

B. RESULTS

1. A review of prior experience with I.C. engine applications has highlighted the problems in design and maintenance. However, it is also indicated that long life reliable operation can be achieved in proper design. Many new applications are operating successfully with minimum maintenance and high reliability.

2. Based on a review of various engine types, the characteristics for reliable, cost effective operation are emerging. A promising candidate appears to be a robustly constructed engine operating at reasonably heavy load which combines favorable maintenance characteristics with high efficiency. Accessory equipment, such as large oil reservoirs extra capacity oil and air filters are also extremely important for extended maintenance. In general, both the engines and accessory equipment are currently available.

3. I.C. engine heat pump systems incorporating heat recovery (Figure 1) can achieve steady-state design point thermal COPs of the order of 1.6 (Figure 2) which is considerably higher than available from gas furnaces.

4. The systems could produce substantial energy savings on a seasonal basis, with the magnitude dependent on climate and system design and load matching. For Knoxville, a mid climatic region, seasonal thermal COP is 1.21 and annual energy savings is 25% relative to a conventional furnace or 10% relative to an advanced condensing (η_F=95%) furnace.

ORNL–DWG 82–8006

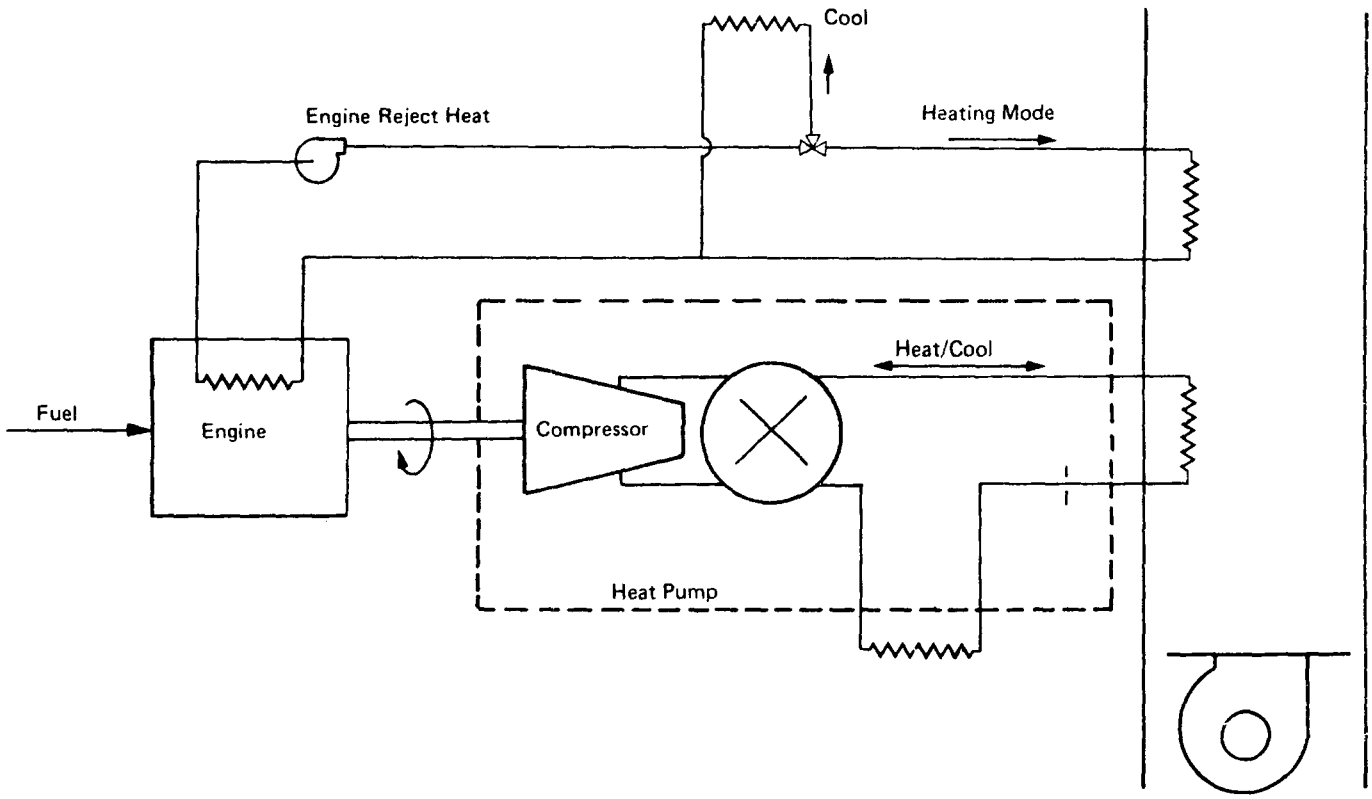

FIGURE 1 I.C. ENGINE DRIVEN HEAT PUMP

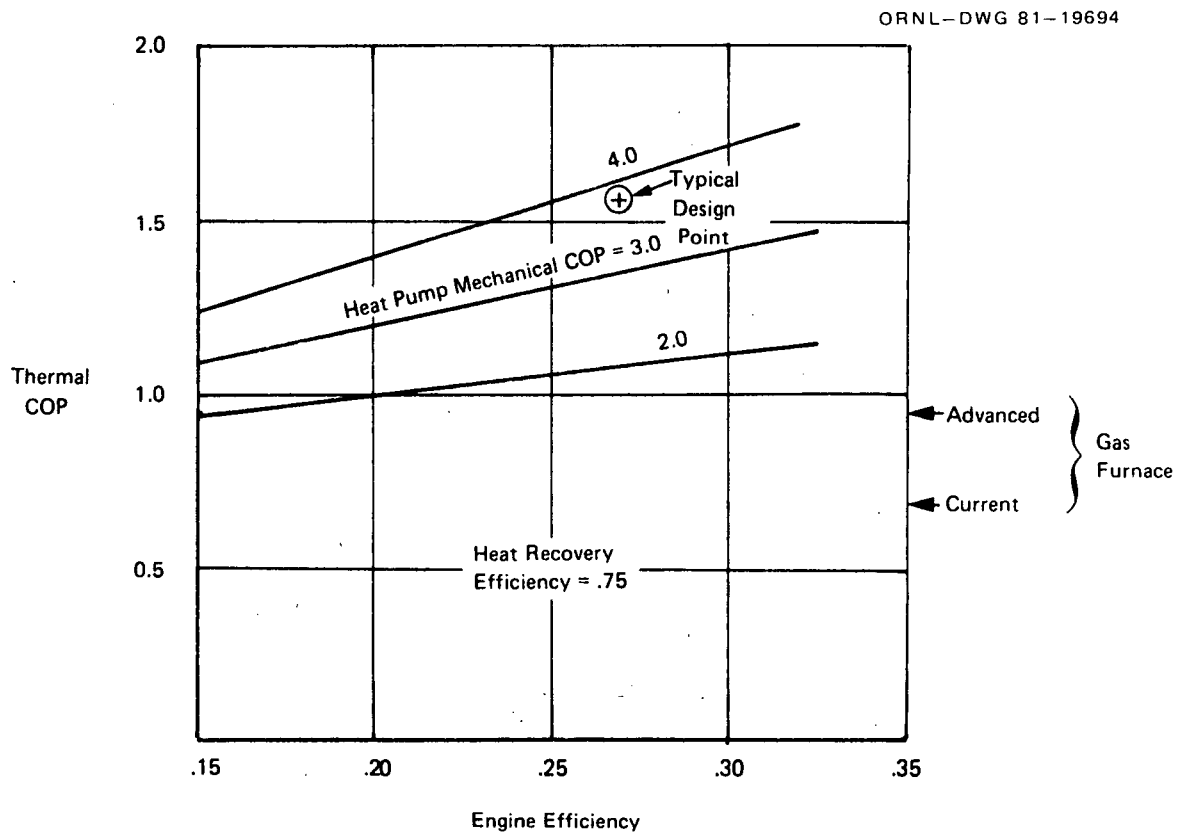

FIGURE 2 I.C. ENGINE-DRIVEN HEAT PUMP HEATING PERFORMANCE

5. Steady-state design point cooling thermal COP will be about 1.0 (Figure 3). This level of performance would make the I.C. engine driven heat pump competitive with, or somewhat superior to, electric air conditioning, depending on the regional gas and electric rates. Since the energy savings appears to be small, the cooling comparison was considered to be a standoff and not quantitatively treated in this analysis.

6. As shown in Table 1, the economic feasibility of heat engine driven heat pumps seems very promising for the larger sizes (50 HP), even with the seasonally variable space heating duty cycle. With improved performance from advanced technology or enhanced load factor, such as might be realized with a dedicated hot water load, payback periods would be even more attractive. The economic feasibility of small systems (3 HP) is not promising.

7. Requirements for noise isolation and/or specific steps required to meet these requirements are as yet not well defined.

8. Emissions from natural gas I.C. engines are higher than from gas furnaces serving the same load. It is believed that catalytic converter technology will be adequate for emission control if needed. Diesel engines produce lower quantities of NO_x than natural gas engines; however, emission control may be more difficult.

9. Estimates of system installed costs used in the current analyses are of necessity very approximate and, in some cases, conservative. The engine costs used are indicative of current single purchase list prices for what is a specialty item. Quantity purchase and high volume production would be expected to accomplish substantial cost reductions. Estimates for heat recovery and noise isolation enclosures are preliminary projections of production costs based on estimates of custom installations provided by manufacturers and packagers. A substantial portion of system costs, particularly for the larger systems, is associated with the heat pump, rather than the engine.

C. CONCLUSIONS

1. I.C. engine heat pump systems can achieve substantial energy savings relative to conventional heating and cooling equipment.

2. Current engine technology appears adequate to achieve long life with extended maintenance intervals.

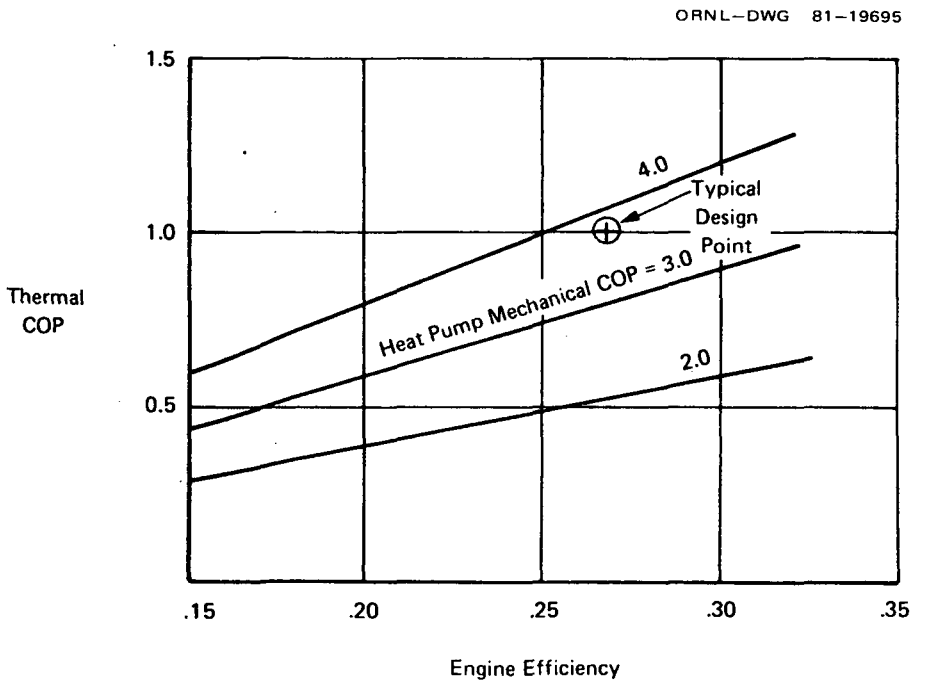

FIGURE 3 I.C. ENGINE-DRIVEN HEAT PUMP COOLING PERFORMANCE

TABLE 1

TYPICAL ECONOMIC PAYBACK RESULTS
(PAYBACK PERIOD IN YEARS)

	3 HP I.C. ENGINE HEAT PUMP SYSTEM		50 HP I.C. ENGINE HEAT PUMP SYSTEM		
	CURRENT TECHNOLOGY (2) SPACE HEAT DUTY CYCLE	ADVANCED TECHNOLOGY (3) SPACE HEAT DUTY CYCLE	CURRENT TECHNOLOGY (2) SPACE HEAT DUTY CYCLE	ADVANCED TECHNOLOGY (3) SPACE HEAT DUTY CYCLE	CURRENT TECHNOLOGY (2) CONTINUOUS DUTY CYCLE (4)
FURNACE EFFICIENCY=.7					
FUEL--4 $\$/10^6$ BTU	∞(5)	∞(5)	5.5	3.0	1.4
FUEL--7 $\$/10^6$ BTU	∞(5)	21.3	2.9	1.7	0.8
FURNACE EFFICIENCY=.95					
FUEL--4 $\$/10^6$ BTU	∞(5)	∞(5)	20	5.9	2.8
FUEL--7 $\$/10^6$ BTU	∞(5)	∞(5)	9.0	3.2	1.6

Notes:

1. Simple payback = incremental system cost/annual incremental energy and maintenance cost.

2. Current spark ignition engine and heat pump characteristics.

3. Postulated advanced technology system based on 30% improvement in heat pump vapor compression cycle COP and the elimination of cycling losses.

4. Postulated continuous duty cycle for dedicated water heating service evaluated as limiting case.

5. Infinite paybacks result from incremental annual maintenance cost exceeding annual energy savings.

6. Knoxville climatic data.

7. Conventional system is electric A/C (midline) and gas furnace.

8. Refer to Table 10 and pages 48-49 for further description of options evaluated and results.

3. The economic potential of I.C. engine heat pumps appears very promising for the larger sizes (50HP), particularly for "near continuous" duty cycles or if advanced, higher efficiency equipment were successfully developed.

4. In light of the technical and economic feasibility and the availability of key components, the internal combustion engine driven heat pump seems a good candidate for near term applications in larger (50 HP) sizes.

5. Key areas of uncertainty include: costs of installed systems on a volume production basis, and the requirements and cost impact associated with noise isolation and emissions.

D. RECOMMENDATIONS

The technical and economic feasibility of I.C. engine heat pump systems appears sufficiently promising, particularly in the larger sizes applicable to multifamily and light commercial applications, to warrant further development. In addition to its intrinsic merits, this near term technology could provide a standard or bench mark by which more advanced system concepts could be evaluated.

Development program options intended to accelerate commercial development include:

- The near term demonstration of an I.C. heat pump in a real application.
- Systems analysis and simulation leading to better understanding of performance and possible areas requiring additional R&D.
- Detailed production cost estimates to establish installed costs.
- A market assessment.

II. INTRODUCTION

It has long been recognized that fossil-fired heat actuated heat pumps can provide opportunities for substantial energy savings, particularly when operating in the heating mode (References 1,2,3). In recent years, the need for energy conservation has provided an additional incentive for development of this equipment.

Most of the programs to develop heat actuated heat pumps in the United States have at least partial funding from the U.S. Department of Energy (DOE) and/or the Gas Research Institute (GRI). Additionally, some gas utilities are sponsoring developments. A variety of concepts have been pursued including many initially pursued for gas air conditioning or solar air conditioning (References 4,5,6). Current programs include a variety of reasonably high technology concepts, primarily external combustion engines, such as Rankine, Stirling, and Brayton cycles. (Reference 7) Contrary to the similar programs underway in Europe (Reference 8), and Japan, the United States' program does not currently include any contracts including relatively, conventional, and internal combustion (I.C.) engine arrangements with which to compare high technology options. In part, at least, the lack of active consideration of I.C. engines in the United States has resulted from concerns relative to issues of reliability, efficiency, noise and first costs and operating costs - and to date U.S. engine manufacturers have shown relatively little interest in either internally funded or government supported developmental work on I.C. engine heat pump drives. Although these concerns are valid, it is not clear that properly designed I.C. engine systems will not be competitive with many of the other options under development. Therefore, a need existed to evaluate the potential I.C. engine heat pump systems and to outline whatever program options might be merited for further development.

The current program to assess the potential of I.C. engine heat pumps consists of four tasks:

- Task 1 - Review prior experience with piston engine drives for small, long term stationary applications.
- Task 2 - Establish characteristics of current engines.
- Task 3 - Prepare and evaluate conceptual designs of I.C. engine heat pump systems.
- Task 4 - Identify program options for I.C. engine heat pump development.

In conducting this assignment, we have used our prior experience in engine and heat pump technologies supplemented by extensive discussions with manufacturers, packagers and users of I.C. engine driven equipment. The body of this report is divided into four major sections, corresponding to the tasks above.

III. PRIOR EXPERIENCE WITH SMALL I.C. ENGINES IN LONG LIFE APPLICATIONS (TASK 1.0)

A. OVERVIEW

The objective of this task is to review the history of small, I.C. engines in applications similar to heat pumps to understand the prior success and/or problems and the approach for minimizing such problems in future applications. Specifically included in this task was review and assessment of experience with total energy systems over the past two or three decades including representative reasons for decommissioning such installations. Also, current long life applications in the United States and Europe in which small, I.C. engines are performing satisfactorily were to be determined.

Our review focused on applications having duty cycle and maintenance constraints similar to heat pump operations. Two major categories of experience included: (1) heat pump and air conditioning applications including United States air conditioning experience in the 60's and more recent, European heat pump activities and; (2) total energy systems again, including both early U.S. experience and more recent developments. Additionally, other applications were considered such as mobile refrigeration and light house operations where there was experience pertinent to heat pump applications.

The review was accomplished primarily by contact with manufacturers, packagers, and users of engine driven equipment supplemented, particularly in the case of European activities, by various literature sources.

The results indicated that many of the early I.C. engine driven systems in the United States in total energy service and other applications did have maintenance and reliability problems, just as did the early electric heat pump installations in the 50's. Many of the life, maintenance and reliability problems were serious in nature and underscored the need for improvements in design and/or maintenance procedures. However, these problems appear amenable to correction; and, in fact, subsequent improvements in engine design and accessory systems have greatly minimized the sources of the difficulties experienced. There are also a number of applications where small I.C. engines are performing satisfactory in long life service with minimal problems in maintenance and reliability.

B. HEAT PUMP/AIR CONDITIONING APPLICATIONS

1. Washington Gas Light Air Conditioning Experience

The Washington Gas Light Company (WGLC) conducted several studies of engine driven heat pumps. These studies covered installations made in

the late 1950's and early 1960's. Two of their reports on these installations were reviewed. (References 9 and 10) The 1961 report is a simple review of two years operating experience of 28 different installations. The 1967 report follows one installation over a period of five years. The conclusions of both reports are almost identical and those relevant to the viability of an engine as a heat pump driver are reproduced below.

> "The energy cost for a normal year for the thermal pump (50-tons) is $2,555 as compared to $4,460 when using a gas boiler for heating with an electric chiller for cooling. This represents an annual energy cost saving for the thermal pump of $1,905.
>
> The average annual maintenance cost for the thermal pump adjusted to eliminate costs of "debugging" (inherent with any prototype equipment) amounts to $1,286. This compares with a projected maintenance cost for a gas boiler/electric chiller system of $840 per year--$446 less than for the thermal pump.
>
> Annual operating cost savings for the thermal pump amount to $1,459--($1,905-$446).
>
> Thermal pumps larger than the 50-ton unit tested should be even more economical, since energy cost saving for a thermal pump increases in proportion to the size of the installation, whereas cost of maintenance (which favors the gas boiler/electric chiller combination) increases at a much slower rate." (Reference 10)
>
> "A major reduction in engine service calls cannot be expected until significant improvements are made by manufacturers of engines and engine-powered assemblies. Improvements have been made by some manufacturers within the past year and many of them are included in new A.G.A. approval requirements, effective January 1, 1962.
>
> A preventive maintenance program is an absolute necessity for satisfactory engine performance.
>
> As fuel cost savings increase more rapidly than service costs, the larger the engine the more desirable the installation to customer and company alike. The most satisfactory are those large enough to justify an operating engineer.
>
> The company should take the initiative to reduce service costs by providing proper training for all men who service gas engines." (Reference 9)

It is important to note that roughly only one half of all maintenance costs were attributable to the engine. The heat pump compressor and its controls as well as the heat exchanger system absorbed the other half of the costs.

None of the engines studied by WGLC were especially modified for heat pump service. As a result the preventive maintenance represented a significant portion of maintenance costs. This included frequent oil changes. While the reports do not state the interval in hours the oil changes were performed about every six weeks. The high cost of preventive maintenance also included very frequent tune-ups. These involved frequent replacement of ignition points, condensers, coils, and other components.

The 1961 report mentions that improvements in the preventive maintenance programs can be expected with new technologies which were just then emerging. Their projections were correct as oil change intervals can now be performed once per year and improved spark plugs and electronic ignitions have virtually eliminated the need for tune-ups more frequently than once per year.

The engine components which appear frequently as requiring unscheduled service in the 1961 report are:

- Starter motor
- Cooling system
- Valves
- Distributor
- Exhaust system (cracks due to thermal movement)

The 1967 report mentions that the single engine it studied had problems with its valves pounding their seats into the head. It also had recurrent main and connecting rod bearing failures later attributed to faulty gaskets allowing coolant to mix with the oil.

Significantly, the 1967 report states that with one exception all of the problems encountered with the one engine were solvable. It states "Only one basic engine problem remains--that of rapid loss of valve clearances (seats pounding in)--We do know that valve "beat in" is not an inherent problem in gas engine operation--" (Reference 10)

None of the engine manufacturers interviewed in Task 2 of this project mentioned this as a problem. However, all supply natural gas engines with hardened valve seats. Perhaps the engine studied in the 1967 report had unhardened seats.

Solutions to the unscheduled maintenance problems mentioned in the 1961 report are available for the most part. The remaining problem appears to be that of the starter motor. Frequent starting of the engine rapidly wears the mechanical parts of the starter resulting in

failure of the starter pinion, its drive system, or the ring gear. Onan Corporation indicated that an alternate type of constant engagement starter motor systems should be developed. However, the provision of thermal storage with the heat pump system would eliminate the need for frequent on-off cycling and should greatly extend the starter motor life. Ring gear life can be improved by decompressing the engine when it is stopped, allowing the ring gear to stop in a random position.

2. Onan Air Conditioning Programs

Onan Division of Studebaker Worthington has been involved in two air conditioning programs using Onan natural gas engines: (1) a 1957-58 project with Coleman; and (2) a 1962 joint project with Janitrol and AGA. Both termidated prior to commercialization but did provide useful data on factors affecting life and maintenance requirements. (Reference 11)

The Onan/Coleman program used a 12 horsepower rated air cooled engine running at 5-7 horsepower with a direct drive mechanical compressor. A 5 year life was the design goal. Thirty to forty units were field tested. The major problems encountered, and solutions proposed, were:

- Oil change interval

With the basic four quart sump, oil changes were required at 50 hour intervals. However, by increasing the sump to 20 quarts and limiting oil temperatures to 200-240°F, an interval of 1,000 hours could be achieved.

- Starter motor

Onan found the starter motor drive to a reasonably short lived component in cycling service. The maximum life observed was 5,000 hours at four cycles per hour. Onan felt a continuously engaged starter motor was a practical solution and had satisfactory results with a prototype unit.

- Ignition system

Points, condensers, and spark plugs each had a life of about 700 hours for conventional (non-electronic) ignition systems. However, it was projected that electronic ignition with a high voltage coil would allow an ignition system life (including spark plugs) of about 10,000 hours in natural gas service. (This projection is more optimistic than the guidelines discussed in Section IV.)

A 1962 program between Onan, Janitrol (compressor supplier) and AGA was directed toward a life goal of ten years at 1,000 hours per year. Ten units, using a Model JV natural gas fired two cylinder air cooled engine were built. This program investigated the effects of duty cycle

on engine reliability. It was concluded that a constant speed, constant load, continuously running duty cycle was most desirable--and a modulated speed and load, stop and start, least desirable.

3. Recent European Heat Pump Activities

In Europe, interests in gas-fired heat pumps has focused on heating, rather than air conditioning or dual mode heating/cooling due to the limited need for air conditioning particularly in the more industrialized northern countries. A number of manufacturers and utilities are engaged in field test or demonstration programs. Additionally, some heat pump systems are being supplied on a custom design commercial basis. Although this equipment generally has not been in service long enough for extensive information on maintenance and reliability, it does indicate committment on the part of manufacturers and utilities to I.C. engine heat pump technology. Typical engine and/or heat pump package suppliers include:

- Ford, Ltd. --Ford, Ltd. of England is promoting an engine-driven heat pump system based on the Ford 1.6 liter 2274E natural gas engine rated at 26KW continuous at 3,000 RPM coupled to a Denco-Prestcold rotary vane compressor. The system which includes waste heat recovery and provisions for extended maintenance, such as auxiliary oil sump and heavy duty air cleaner is available for test installations in late 1980. (Reference 12)

  The Ford power plant is also being used in systems packaged by Florian Bauer and undergoing field testing in connection with the Ruhrgas evaluation program. (Reference 8) We understand a Florian Baver heat pump system employing a Ford engine has recently been imported for tests at Georgia Institute of Technology. (Reference 13)

- Jenbacher -- The Jenbacher Werke in Austria which manufacturers a line of conservatively designed engines has supplied over 30 engines for heat pump installations in the past three years, ranging from 40 KW to 650 KW. Although the compressor manufacturer frequently acts as the prime contractor, Jenbacher commonly fits compressor engine and heat recovery equipment together and ships the complete package. Maintenance intervals of 2,000 hours, and normal life between major overhauls of 75,000 hours are quoted. Although Jenbacher feels their market will be in the reasonably large sizes (220-330 KW), some smaller sizes, (i.e., 16 KW) are being supplied to others, such as Varia, for packaging and/or testing. (Reference 8)

- Waukesha -- Waukesha, an American manufacturer of high quality engines, has provided over 100 engines in the 50-150 horsepower range for European heat pump service, including the Ruhrgas evaluation program. (Reference 14)

C. TOTAL ENERGY SYSTEMS

1. U.S. Experience in the 1960's

In the 1960's, prompted in part by seemingly favorable fossil fuel prices and gas industry promotion, a number of total energy systems involving either gas turbines or reciporcating engines were installed. It was estimated that in 1968, there were 200 gas engine driven total energy installations in the commercial-institutional sector plus over 2,000 on-site power generators in the industrial sector, some of which also included heat recovery. (Reference 15) In subsequent years, a large fraction were decomissioned for a variety of economic and/or operational reasons.

We are unaware of any comprehensive published report on the total energy experience and this report is not intended to provide such an assessment. However, based on conversations with engine manufacturers, packagers, users and Department of Energy contacts (References 16 - 20), it appears that the reasons for decomissioning primarily fell in two categories:

(1) Systems design and economics.

- Unfavorable energy cost trends caused gas to become more expensive relative to electricity.
- Gas curtailments, or the threat of gas curtailments, undermined confidence in the availability of fuel.
- The interface with the electric utility could be difficult since the utility would be reluctant to provide backup capacity without a commensurately high demand charge.
- Equipment first costs frequently exceeded plan, due in part to the unfamiliarity of many contractors, with total energy system equipment.
- Oversizing sometimes resulted in systems not well matched to the load.

2. High Maintenance and/or Repair Costs

- High maintenance costs were a common problem due to either frequent maintenance intervals and/or the need for standby personnel who were not otherwise occupied.

- Expensive breakdowns occured in some installations due to either the lack of maintenance or to improper maintenance associated with unskilled personnel and/or inadequate procedures.

In summary, it is clear that engine maintenance and reliability was a problem, although by means the total problem in total energy systems. The major contributors to unsatisfactory engine operation were inadequate maintenance techniques and, in many cases, poor systems and engine design.

Well designed, well maintained engines did achieve good life and reliability. For instance, Caterpillar quotes 10,000 hours between top overhauls and 30,000 between major overhauls for their diesel and gas engines used in total energy service.

Cost of maintenance for even the well designed engines and systems was high. However, as indicated in the prior discussion of the Washington Gas Light experience, many of the causes of frequent attention, such as frequent oil change intervals, spark plug replacements, can, and have been alleviated by techniques such as oversized oil sumps and electronic ignition.

3. Current Developments

Although the great surge of interest in total energy systems in the U.S. in the 60's have subsided, some manufacturers, such as Caterpillar and packagers, such as Engine Power Company are continuing to supply total energy systems. Some impetus for this work is due to the recently enacted legislation which requires utilities to buy back generated power at reasonable rates. Some new systems of particular interest are:

- Fiat -- Fiat has a small total energy system (TOTEM) built around the Fiat 127 automobile engine. This package, intended for farm use, includes heat recovery and noise isolation (Reference 21).

- Stewart Stevenson -- Stewart-Stevenson is producing total energy systems based on a modification of G.M. diesel engines. A unique feature of this system concept is its application to methane generated from manure. (References 22 and 23)

D. OTHER APPLICATIONS

1. Mobile Refrigeration

Mobile refrigeration units consist of an I.C. engine driven vapor compression refrigeration cycle with system design and operational constraints similar to that imposed on I.C. engine driven heat pumps.

Thermo King makes mobile refrigeration units driven by an Isuzu engine with a typical load of 6-7 horsepower at 1400 RPM. This system uses an oversized oil sump (18 quarts) and achieves 1200 hours between oil changes. It is believed that a 3,000 hour oil change interval is probably feasible with better control of oil temperature and oil filtration. Life before the first overhaul is 20,000 hours at 2500-3000 per year-- and a bit less than 20,000 for the second overhaul. Overhauls after the second overhaul are not considered economically attractive, since by then the unit is almost 15 years old. (Reference 24)

These systems normally use an open type (i.e., non-hermetic) compressor, such as would be used in an I.C. engine driven heat pump application.

2. Lighthouses

The U.S. Coast Guard presently has about 40 lighthouses and 20 large ocean buoys which are powered exclusively by engine generators. Most of these facilities are unattended, and therefore, engine reliability is at a premium. These facilities use Lister air cooled Diesel engines-either a one cylinder, six horsepower model, or a three cylinder, 18 horsepower model. The engines are normally operated at 70-85% of full load on a continuous basis. A 40 gallon oil sump is provided to prolong oil change intervals. Engine inspection, which occurs at 90 day intervals, includes extracting an oil sample for laboratory analysis and an oil filter change (which is not always accomplished). Oil changes are accomplished on the basis of the laboratory analysis, and in practice occur approximately once a year. In general, the experience with these engines has been excellent, and they rarely contributed to an unscheduled shut down of their facilities. (Reference 25)

Similar experience has been reported with Lister Diesels in Irish Coastal Warning Lights. (Reference 26)

In both instances, examples of heat recovery using the warm air from the engine cooling duct for facility heating have been noted.

IV. CURRENT ENGINE CHARACTERISTICS
(TASK 2.0)

A. OVERVIEW

Manufacturers and users of I.C. engines were contacted to establish the cost, performance, maintenance and operational features (including data on noise and emissions) for various types bracketing the range of interest for heat pump applications.

Preliminary cost trade-offs, balancing initial cost against maintenance costs were prepared to establish the generic type of engines best suited for heat pump applications.

From our evaluations, it appeared that the more robust, relatively heavily loaded, stationary engines provide a better combination of low overall ownership costs and high efficiency than more lightly constructed lightly loaded types such as de-rated automotive engines. Engines are currently available which seem suitable for the long life, extended maintenance interval service needed for heat pump applications.

Based on data supplied by manufactures on current engines, parametric data on first cost, maintenance costs, and efficiency was prepared as an input to the conceptual design and analysis of Section V of this report.

B. OVERALL ENGINE CHARACTERISTICS

1. General Characteristics of Selected Engines

In examining the capabilities of presently available engines, it was desired to review the wide variety of engines available. Present spark ignition and diesel engines are offered with wide variations in initial cost, durability, power per cubic inch, and efficiency. Some manufacturers offer low cost, relatively short lived industrial engines, while others produce very robust, durable, and long lived engines at a resultant price premium. Still others produce less robust, large displacement engines producing very little power per cubic inch, thus achieving the relatively long life of their smaller displacement, more robust and efficient competitors at approximately the same price.

Table 2 presents a few of the many engines which could be considered for heat pump applications. This table is presented in order to illustrate the range of engine characteristics available and is not intended to provide a basis for the recommendation of any specific engine make or model.

TABLE 2

GENERAL CHARACTERISTICS OF SELECTED ENGINES

		KOHLER (KOHLER, WI)	UNAN (MINN., MN)	WAUKESHA (WAUKESHA, WI)	WAUKESHA (WAUKESHA, WI)	PERKINS (DETROIT, MI)	CATERPILLAR (PEORIA, IL)	LISTER (KANSAS)	THERMO KING (MINN., MN)	BRIGGS & STRATTON (MILL., WI) (WEST GERMANY)
ENGINE DESCRIPTION	MODEL	K301S	JB	VR200G	VR2000	4.108	3304	ST-1A	Made by Isuzu	Made By Farryman
	TYPE	S.I.	S.I.	S.I.	DIESEL	DIESEL	DIESEL	DIESEL		DIESEL
	COOLING	AIR	AIR	LIQUID	LIQUID	LIQUID	LIQUID	AIR		AIR
	DE-RATED HP	4.5	~10	82	69	20	85	8	6-12	7.5
	DISPLACEMENT	29	60	220	220	108	425	39	112	UNKNOWN
	FIRST COST(6)	300	-2000	1800(5)	2300(5)	2250(3)	7840	1950	2500(3)	UNKNOWN
OVERHAUL SCHEDULE/LIFE (HRS.)	TOP OVERHAUL	7,500	10,000	10,000	6,000(4)	10,000(4)	10,000(4)	5,000(4)	10,000(4)	UNKNOWN
	MAJOR OVERHAUL	7,500	10,000	20,000	10,000	20,000	30,000	25,000	20,000	UNKNOWN
	ULTIMATE LIFE	30,000	30,000	Infinite(1)	Infinite(1)	Infinite(1)	Infinite(1)	Infinite(1)	80,000	5,000
RECOMMENDED MAINTENANCE SCHEDULE (HRS.)	OIL CHANGE	50+	250(est.)	500	250	1,000	1,000	250	1,200	UNKNOWN
	SPARK PLUGS	750	750(est.)	2,000	N/A	N/A	N/A	N/A	N/A	N/A
	ADJUST VALVES	Unknown	Unknown	2,000	2,000	2,500	1,500-2,000	10,000	10,000	UNKNOWN
	FUEL INJECTOR	N/A	N/A	N/A	10,000(4)	10,000(4)	10,000(4)	10,000(4)	10,000(4)	UNKNOWN
FUEL CONSUMPTION	GASEOUS FUELS (BTU/HP-HR)	15,100	N/A	8,200	N/A	N/A	N/A	N/A	N/A	UNKNOWN
	LIQUID FUEL (LB/HR-HR)	.89	.89(est.)	N/A	.40	.44		.4	.46	UNKNOWN

Notes:

1. Since all wear components are replaceable, ultimate life if infinite. However, economic life is usually under 100,000 hours.
2. Briggs & Stratton does not make any gasoline engine with greater than 1000 hrs. life. However, they do own a small high quality diesel (Farryman) used in European heat pump service.
3. Has extended maintenance interval accessories.
4. Figures of 5,000 to 20,000 hrs. have been mentioned. Five thousand hours will result in no loss of efficiency. Acceptable running can be maintained until 10,000 hours. Figures shown are manufacturer's recommendations for power level shown.
5. Basic engine.
6. Costs in 1980 Dollars

- Spark Ignition Engines

The Kohler engine is representative of the low first cost, basic engine which will provide a reasonable service life between overhauls. This is an L-head engine with a splash lubrication system and is the simplest engine on the list. It is usually applied in intermittent running applications.

The Onan engine is representative of the longer life, simple industrial engine. With a pressure fed lubrication system and longer maintenance intervals, it is representative of those industrial engines intended for more frequent use or more continuous duty cycles than the Kohler. Both this engine and the Kohler have integral cylinders and blocks. Thus the ultimate life is limited by the number of times the cylinder can be rebored and fitted with oversized pistons.

The Waukesha VR220G is representative of the more robust, more heavily loaded (higher power per cubic inch) engines which are inherently more efficient. The Waukesha achieves its long life between overhauls through robust construction.

- Diesel Engines

The Perkins and Thermo King engines shown are both automotive engines originally designed for relatively light duty. The configuration presented in the table are engines which have been modified for mobile refrigeration duty. As such, they are lightly loaded (low power per cubic inch) and have features and accessories designed to maximize the number of operating hours between scheduled maintenance intervals. In this configuration both of these engines are intended for continuous operation.

The Caterpillar engine presented is similar in design philosophy to the Perkins and Thermo King. It is a heavy duty truck or off road equipment engine which has been derated for extended life and maintenance intervals. As shown, the engine is intended for total energy system application.

The Lister and Waukesha VR220D are typical of the more efficient, highly loaded engines designed for long life and continuous running.

2. Preliminary Cost Trade Offs

As Table 2 and the previous section illustrate, there are a variety of engines which are capable of heat pump service. Each of the engine types in Table 2 have certain characteristics which offer specific advantages and disadvantages. The selection of the most desirable characteristics and engine type must be made on the basis of a trade-off study.

In this program the annual cost of owning and maintaining an engine was chosen as the overriding selection criterion. Other factors such as scheduled maintenance frequency (frequency of oil changes, tune-ups, overhauls, etc.) was also judged important, especially from a convenience standpoint. However, the maintenance frequency was found to adversely influence costs, so that the engine having the lowest annual ownership cost would also have an acceptable if not optimum maintenance frequency.

Table 3 presents a cost trade-off study of four engines from Table 2. These engines were selected for this study as having roughly equivalent power outputs but each has been designed with a different philosophy. From top to bottom the engines represent increasingly robust designs with decreasing maintenance frequencies.

The Lister engine in Table 3 has had extended maintenance, interval accessories added to it so that the oil change interval is once every 10,000 hours. (These accessories are discussed in the following sections of the report.) Likewise, the Onan unit has similar accessories added, increasing the oil change interval to 1,000 hours to coincide with spark plug changes. All other maintenance intervals are as they appear in Table 2.

From the third column in Table 3 it is apparent that there is a definite trend towards decreasing ownership costs with increasing maintenance intervals. This trend is not offset by the higher initial cost of the longer lived engines, as shown in the fourth column.

Table 3 also indicates that the annual ownership costs decrease assymptotically with increasing engine cost. Using the assumption that the first cost of the engine is amortized over about ten years, annual ownership costs (exclusive of fuel costs) will approach about $400 to $500 per year.

The ultimate selection of long life engine design must be made between the lightly loaded Thermo-King philosophy or the more heavily loaded Lister type. Selection will depend upon the efficiency of the engine (the more highly loaded, the more efficient) and the method by which the fuel costs are traded off against the capital and maintenance costs.

Since there is about a 15 percent fuel consumption penalty (see Table 2) associated with the use of a lightly loaded versus a highly loaded engine and the annual ownership costs for a more highly loaded engine are lower if it is financed as in Table 3, it may be concluded that the more robust engine is also the more economically attractive design.

TABLE 3

PRELIMINARY ENGINE COST TRADE-OFFS

(Exclusive of Fuel Costs)

	Initial Cost	Ultimate Life (Hours)	Annual Maintenance Costs	Annual Ownership Costs(6) Capital Recovery Factor=.1	Annual Ownership Costs(6) Capital Recovery Factor= .15
Kohler K301S 29 in^3, 11 HP @ 2700 RPM (Gas)	$ 300	30,000	$1,780	$1,810	$2,230
Onan JB Series 60 in^3 17.2 HP @ 2700 RPM (Gas)	2,000	30,000	500	700	800
Thermo King C201 121 in^3, 12 HP @ 2200 RPM (Diesel)	2,500	80,000	370	620	745
Lister ST-1A 39 in^2, 8 HP @ 2000 RPM (Diesel)	2,650	100,000	240	505	638

1. Each engine can be rebuilt 3 times. (Lister can be rebuilt 4 times.)
2. Rebuild costs: 50% of Kohler initial cost, 50% for others.
3. Labor charge for tune-ups and oil changes: $25.00 per hour.
4. Manufacturers recommended preventative maintenance schedule is followed.
5. Preventative and overhaul maintenance for 20 years at 3,000 hours per year; 3,000 x 20 = 60,000 hours.
6. Annual ownership cost = annual maintenance cost + capital recovery factor x initial cost.
7. Engine data per information supplied by manufacturers (References 27, 11, 24, 28)
8. Costs in 1980 dollars.

C. FEATURES FOR LONG LIFE AND LOW MAINTENANCE

1. Engine Design

An examination of the long-life engines in Table 2 and discussions with engine manufacturers confirms that the design features which characteristize long life engines are:

- Robust crankcase and crankshaft for minimum deflection under load and maximum bearing area.
- Pressure feed lubrication system to insure adequate lubrication and cooling of all moving parts.
- Hardened valve seats to minimize the rate of valve sink and frequency of adjustment.
- Chrome valve stems to minimize stem wear.
- Replaceable cylinder liners for infinite rebuidability and the implied even cooling of individual cylinders resulting in minimum thermal distortion.

2. Operating Characteristics

Operating or duty cycle characteristics have a very influential part in determining the life of a given engine design. Regardless of their particular design philosophy, however, all manufacturers interviewed indicated that the following duty cycle characteristics would maximize engine life:

- Low speed operation (1000-2500 RPM) to minimize engine friction and inertia loading to obtain maximum life and efficiency.
- Continuous loading at 60 to 100% of maximum rated load (BMEP) at 70 to 100 psi for spark ignition engines, 60-70 psi for diesels to provide an environment which minimizes combustion chamber deposits and blow-by.
- Optimum operating temperatures:

  -140-220°F oil temperature to minimize water build up and oil breakdown.

  -160-200°F coolant (liquid) to maintain proper combustion chamber and cylinder wall temperatures.

  -Under 1000°F exhaust gas to maximize exhaust valve life.

3. Accessory Equipment

Just as there are certain prescribed features to maximize engine life, there are also certain accessories which can increase the time between scheduled maintenance operation. For heat pump service with once-a-year only maintenance (nominal 3000 hours) the following accessories are recommended:

- 50 quart capacity oil reservoir with continuous circulation of all oil through the engine
- Stored pressure type prelubrication system
- Extracapacity oil and air filters
- Extra capacity fuel filters for liquid fueled engines
- Positive crankcase ventilation system
- For diesels:
  Wear resistance fuel injection pump such as Lucas CAV "A" type
- For spark ignition:
  High voltage, breakerless electronic ignition, long-life spark plugs (platinum or gold palladium surface gap electrodes)

Option: For frequent cycling, continuously engaged started motor or decompression on stopping is needed.

The incorporation of these engine design features and accessories as well as running engines in the ranges recommended for the operating parameter will overcome virtually all of the problems reported in the Washington Gas Light experience.

D. COST AND PERFORMANCE ESTIMATES FOR CONCEPTUAL DESIGN STUDIES

1. Costs

In order to provide realistic engine cost and performance data for evaluation of 3 and 50 horsepower engine driven heat pump systems, realistic engine cost and performance estimates were developed. Manufacturers projections for initial cost (purchase price) and maintenance costs were utilized directly for a specific 50 HP engine. (The specific manufacturer and his engines will not be identified.) For the 3 HP engine, costs and maintenance requirements had to be taken from a slightly larger engine. However, it is anticipated that the difference in costs between the actual engine (approximately 4-8 HP) and the hypothetical 3 HP engine are not significant.

Costs were developed for spark ignition (natural gas) and diesel engines of 3 and 50 HP. All engines were of the highly loaded, long life design for maximum efficiency and durability.

Table 4 presents the first cost and annual maintenance costs. The basic engine estimate includes a running engine with starter motor and water pump, but without any other accessories. The accessory cost includes all accessories listed in section C.3 of this report. All equipment costs reflect actual over-the-counter price for a single purchase, rounded to the nearest one hundred dollars. In some cases up to a 45% discount is available for high volume purchase.

Maintenance costs reflect actual manufacturers projections for the 50 HP engine and include parts and labor at $25.00 per hour. The 3 HP maintenance is scaled down for labor time and quantity and sizes of replacement parts where appropriate. Table 5 presents the scheduled maintenance items required at various intervals.

The total shown in Table 4 annual maintenance costs reflect total expenditures amortized over 60,000 hours of operation in 20 years.

2. Efficiency

In order to project total costs and estimate energy savings, it is necessary to determine the overall thermal COP of the I.C. engine driven heat pump, which is dependent, in part, on engine efficiency.

In this section of the report, engine efficiency determinations are presented. The determination of overall system thermal COP is presented in Section V of the report.

Many factors of engine design and operation influence engine efficiency. At their most efficient operating speed and load, most state-of-the-art engines burning a given fuel type have roughly equivalent efficiencies. Furthermore the full load efficiency of low speed industrial engines is relatively constant over a relatively wide speed range.

The heat pump compressor model requires a shaft speed range of 2 to 1. In the specific engines selected for this study, 1500 RPM represents a midpoint in a 2 to 1 speed range over which the engine efficiency is relatively constant. Thus, 1500 RPM was chosen as a typical operating speed. Table 6 presents the influence of engine speed on efficiency for two diesel engines.

The heat pump compressor model has changing power requirements at both of the constant shaft speeds modeled. Thus, it was necessary to determine the efficiency of the engine as function of load at constant speed.

Engine manufacturers usually publish only full load fuel consumption data. Therefore, it was necessary to estimate part load efficiencies for the engines selected for this study.

TABLE 4

ENGINE FIRST COST AND ANNUAL MAINTENANCE ESTIMATES

	SPARK IGNITION		DIESEL	
	3 HP	50 HP	3 HP	50 HP
FIRST COST				
BASIC ENGINE	1,200	1,800	1,500	2,300
ACCESSORIES	800	900	800	900
TOTAL	2,000	2,700	2,300	3,200
ANNUAL MAINTENANCE				
YEARLY MAINTENANCE	166	180	154	154
BIANNUAL	--	--	24	82
QUADRIANNUAL	22	37	22	37
OVERHAULS	51	112	63	149
TOTAL ANNUAL MAINTENANCE COST	239	329	263	422

TABLE 5

GENERIC MAINTENANCE REQUIREMENTS OF DIESEL AND NATURAL GAS ENGINES

	NATURAL GAS	DIESEL
ANNUAL (APPROXIMATELY 3,000 HOURS)	OIL AND FILTER CHANGE SERVICE AIR FILTER CHECK OPERATING TEMPERATURES COOLANT FLUSH AND CHANGE	
	TUNE UP: COMPRESSION TEST REPLACE SPARK PLUGS REPLACE ROTOR CHECK IGNITION TIMING ADJUST VALVES AND REPLACE GASKET ADJUST CARBURETOR CHECK GOVERNOR	TUNE UP: COMPRESSION TEST CHECK TIMING CHECK GOVERNOR ADJUST VALVES REPLACE ROCKER GASKET REPLACE FUEL FILTER
BIANNUAL (APPROXIMATELY 6,000 HOURS)	NONE	REPLACE INJECTOR NOZZLES
QUADRIANNUAL (APPROXIMATELY 12,000 HOURS)	REMOVE AND REPLACE CYLINDER HEAD INSTALL NEW VALVE GUIDES AND SEATS REPLACE OR REFACE VALVES REMOVE, REPLACE, ADJUST ROCKER ARMS CLEAN AND INSPECT, REPLACE AS REQUIRED: GASKETS GUIDES VALVE SEATS VALVE SPRINGS ADJUSTING SCREWS LOCK NUTS PUSH RODS ROCKER ARMS VALVES VALVE ROTORS	

TABLE 6

PREDICTED DIESEL FUEL CONSUMPTION AND EFFICIENCY

Engine Displacement (in3)	Speed (RPM)	Shaft HP HR	Shaft BTU	BSFC LBS/BHPHR	Fuel Consumed BTU/HR (2)	Efficiency Shaft BTU/FUEL BTU
15.2	2400	3	7635	.47(3)	27932	.27
15.2	1600	2	5090	.45(3)	17829	.28
15.2	1200	1.5	3818	.48(3)	14263	.27
253	2400	50	127,250	.46(4)	455630	.28
253	1600	33.3	84,833	.43(4)	283659	.30
253	1200	25	63,625	.45(4)	222862	.28

Notes:

1. Brake mean effective pressure = 65 psi.
2. Based on heating value of 19810 BTU/lb.
3. Based on Lister LT-1 (assuming performance of 15.2 in^3 engine is equal to LT-1 at 65/81% of full load as per Lister SB 268).
4. Based on John Deere 4276D (assuming performance of 253 in^3 engine is equal to 4276D at 65/106% of full intermittent load as per Lister SB 268).

Figure 4 presents the estimates using brake mean effective pressure as an indication of relative power output. The uppermost line is the calculated efficiency of a diesel engine based upon the manufacturer's full load data at 1500 RPM. That manufacturer also publishes a "rule of thumb" table presenting the influence of reduced power output at constant speed.

No such part load calculation procedure was available for natural gas engines. However, the Bosch Automotive Handbook (Reference 29) provided a convenient source of "typical" data for spark ignited gasoline fueled automotive engine. This data was used to determine the lower three lines of Figure 4.

A full load, 1500 RPM data point was available for the new Lister natural gas engine. This point is shown as the triangle on the "Natural Gas" line of Figure 4. Because the natural gas and gasoline fueled spark ignition engines are basically similar except for compression ratio, a line paralleling the Bosch handbook data was drawn through the Lister point. This line is assumed to be typical of natural gas engine efficiencies as a function of load at low speeds (1500 $\pm$ 500 RPM).

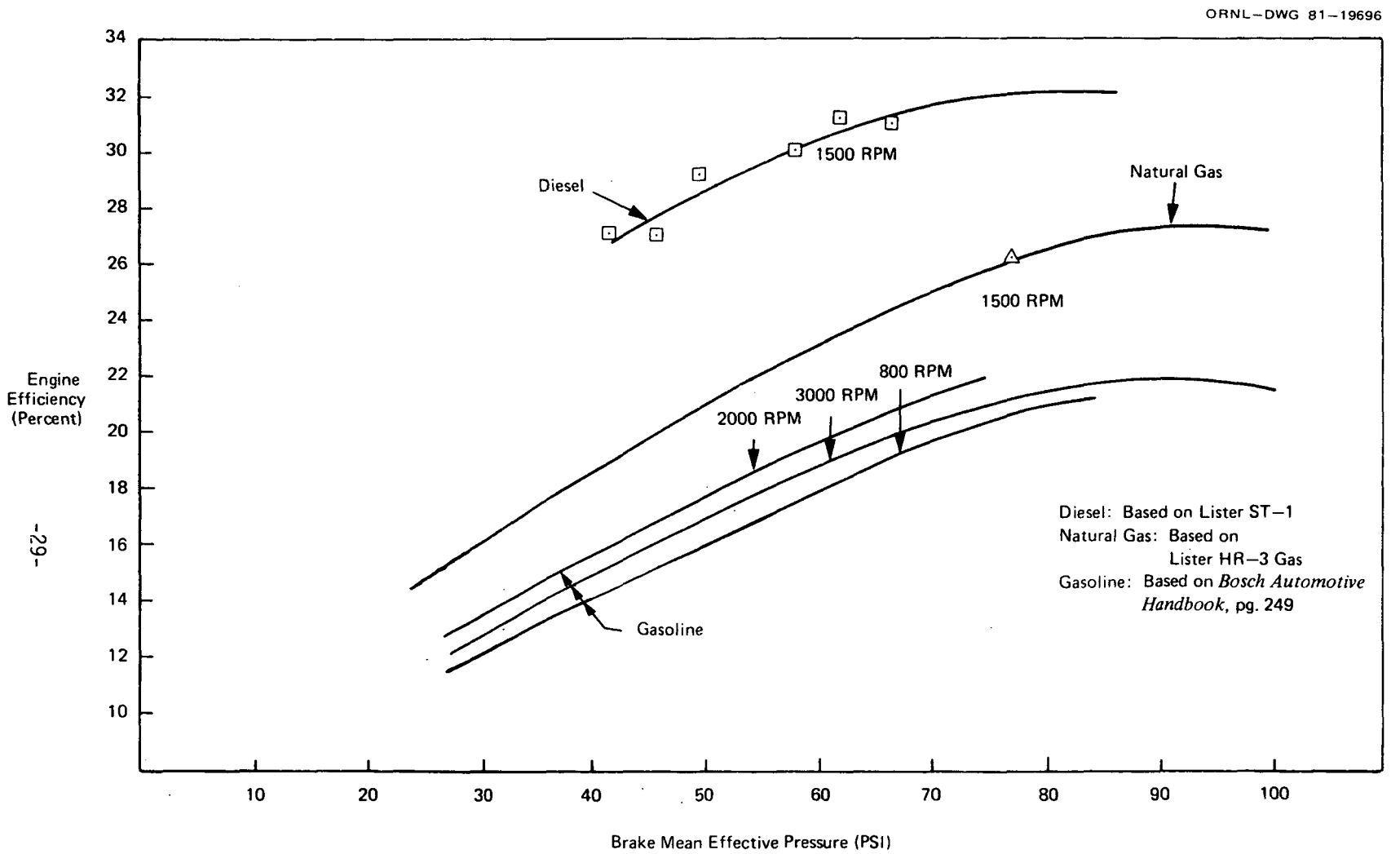

FIGURE 4 CHARACTERISTIC ENGINE EFFICIENCIES

Arthur D Little, Inc.

V. CONCEPTUAL DESIGN
(TASK 3)

A. OVERVIEW

Conceptual designs were prepared and evaluated on the basis of cost, performance, economics, and operational and institutional factors to obtain a preliminary assessment of the potential of I.C. engine-driven heat pump systems.

A system block diagram, identifying major generic elements was used as a basis for estimating performance, first cost, and maintenance cost. Energy savings and economic potential were determined for various system combinations, including variations in size, climatic region, load type (space heat and/or hot water), and system design options. In addition to the economic results, the overall evaluation included consideration of institutional and operational factors, such as noise and vibration and the identification of key areas of uncertainty.

The results indicated that the economic potential was best (and quite promising) for larger (50 HP) units particularly when supplying a seasonally steady hot water load--and somewhat less promising when supplying a seasonally variable space heat load. Smaller systems (3 HP) were less promising because of the larger impact of first cost and maintenance costs. For all systems, competition against high efficiency condensing furnaces (becoming available for natural gas) was substantially more difficult than against the lower efficiency equipment currently in use.

Problems associated with noise and emissions generally appear tractable, although diesel clean-up if required may be more difficult. However, the extent of noise isolation and emission control is likely to be dictated by regulations not yet in place.

Other key areas of uncertainty include actual system costs corresponding to volume production including heat recovery and noise isolation, equipment, and definitive system performance and optimization data.

B. SYSTEM DESIGN DEFINITION

Figure 5 shows a block diagram of an I.C. engine driven heat pump system. Major generic elements of this systems are:

- An I.C. engine with starter and extended maintenance features;
- A vapor compression heat pump cycle with reversing valve and outdoor and indoor coils;
- A recovery loop extracting heat from water jacket, oil sump, and exhaust--and either supplying it to the building in winter or rejecting to the ambient in summer;

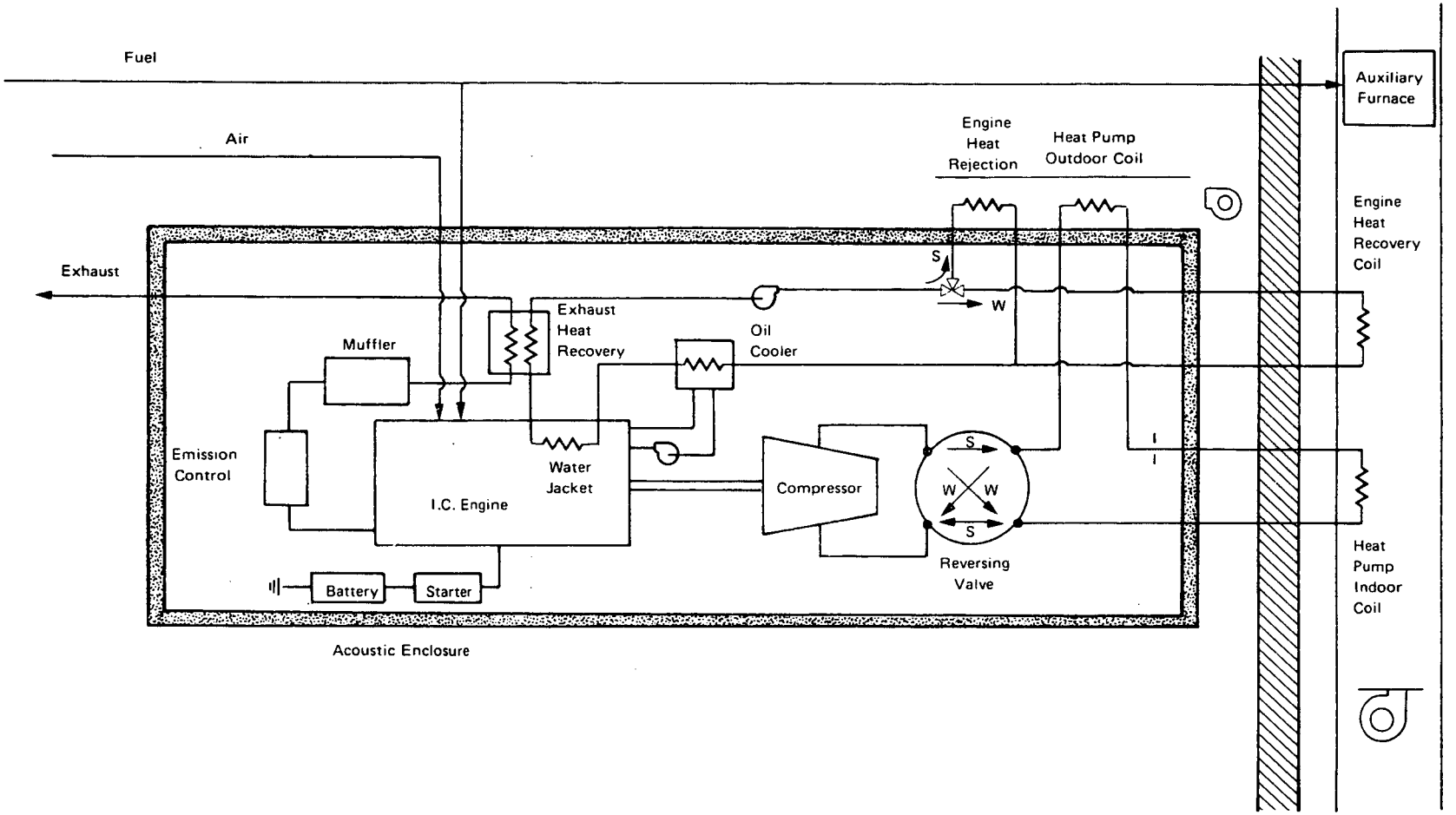

FIGURE 5 BLOCK DIAGRAM FOR I.C. ENGINE-DRIVEN HEAT PUMP

- An exhaust system with muffler and emission controls as needed;
- An acoustic enclosure providing noise attenuation and incorporating the outdoor and air fan;
- Inlet air in fuel systems;
- A back-up furnace--indicated as a fossil furnace, although resistance strip heaters might also be adequate.

C. CAPITAL AND MAINTENANCE COSTS

Equipment capital costs and maintenance costs were estimated both for I.C. engine heat pump systems and for conventional heating/cooling systems. The major equipment categories were:

(1) Engine System consisting of:

--Engine with accessories

--Heat recovery and sound isolation equipment.

(2) HVAC equipment, including:

--Vapor compression heat pump and back-up furnace for I.C. engine system

--Conventional equipment, either air conditioning and fossil furnace or fossil furnace only.

The first cost and maintenance cost for the basic engine with auxiliaries was presented in the previous section. (See Table 4.) As noted, the equipment costs are based on current list prices for engines sold on a specialty basis and do not reflect cost savings which might be accomplished with high volume production--or quantity purchasers.

Heat recovery and sound isolation can represent substantial costs relative to the basic engine. In most cases, the experience to date is based on custom installations with no benefit of volume production.

Jacket water recovery which accounts for about two thirds of available heat is conceptually simple and involves little more than plumbing. Exhaust or muffler heat recovery accounting for the remaining one third can be considerably more expensive. Based on our discussions with manufacturers as to the current custom costs of heat recovery and our and their projections as to the economies could be achieved with the standardized product, we assumed that an allocation of $1,500 would be reasonable for the 50 HP size and $300 for the 3 HP.

Sound isolation costs can depend greatly on the degree of sound attenuation required. This may be a very critical item in establishing the acceptability of I.C. engine heat pump designs. Again, based on discussions with manufacturers and packagers and our own estimates, we assigned a target cost of $1500 for the 50 HP engine and $800 for the 3 HP.

HVAC equipment costs were based on published cost estimating data (Reference 30) for electric heat pumps (minus the cost of the electric motor), electric air conditioners, and gas furnaces. Maintenance costs were estimated from literature data, such as Reference 31 supplemented by discussions with equipment suppliers.

Table 7 presents equipment costs and annual maintenance costs obtained in accordance with the above discussion. Results are presented for I.C. engine heat pump systems of the spark and diesel type and conventional systems consisting of either electric air conditioning and furnace or furnace only--of approximately the same heating and cooling capacity as the I.C. engine systems.

Table 8 summarizes the same basic data in terms of incremental costs, i.e., the incremental costs of the I.C. engine heat pump system over and above the cost of a comparable conventional system.

D. PERFORMANCE ANALYSIS

1. Methodology

The design point and seasonal heating performance of I. C. engine heat pump systems were determined for a variety of conditions. Cooling performance was not specifically calculated, since, as will be discussed below, cooling was considered to be basically an economic standoff relative to electric air conditioning.

As illustrated in Figure 6, the analytical methodology involved first the system definition consisting of matching an engine to a heat pump and, in turn, matching the system to a load and then a computation of overall system performance throughout the temperature range of interest.

The basic data required for the analysis included:

- Vapor compression heat pump data obtained from manufacturer's performance literature.
- I.C. engine efficiency per section 4 (Figure 4).
- Part load performance (to be discussed below).
- Climatic data per References 32 and 33 in the form of total hours experienced in each 5° interval of ambient temperature during the heating season.

TABLE 7

OVERALL FIRST COSTS AND ANNUAL MAINTENANCE COST ESTIMATES

FOR I.C. ENGINE HEAT PUMP SYSTEMS AND CONVENTIONAL SYSTEMS

	I.C. ENGINE HEAT PUMP				CONVENTIONAL SYSTEMS(1)			
	SPARK IGNITION		DIESEL		A/C AND FURNACE		FURNACE ONLY	
	3 HP	50 HP	3 HP	50 HP	3 HP	50 HP	3 HP	50 HP
CAPITAL COST ($)								
ENGINE SYSTEM								
ENGINE	2,000	2,700	2,300	3,200	--	--	--	--
HEAT RECOVERY	300	1,500	300	1,500	--	--	--	--
SOUND INSULATION	800	1,500	800	1,500	--	--	--	--
SUBTOTAL	3,100	5,100	3,400	6,200	--	--	--	--
HVAC(2)	3,500	40,000	3,500	40,000	2,900	35,000	700	4,000
TOTAL	6,600	45,700	6,900	46,200	2,900	35,000	700	4,000
ANNUAL MAINTENANCE ($/YR)								
ENGINE SYSTEM	239	329	263	422	--	--	--	--
HVAC(2)	120	500	120	500	120	500	30	100
TOTAL	359	829	383	922	120	500	30	100

Notes:

(1) Sizes to provide air conditioning and/or heating equivalent to 3 HP and 50 HP I.C. engine heat pump systems.

(2) Heat pump (or air conditioner) and/or furnace.

TABLE 8

ESTIMATED OVERALL INCREMENTAL OWNERSHIP COSTS
(Spark Ignition Engine)[1]

	RELATIVE TO ELECTRIC A/C AND FOSSIL FURNACE		RELATIVE TO FURNACE ONLY	
	3 HP	50 HP	3 HP	50 HP
FIRST COST ($)				
ENGINE SYSTEM	3,100	5,700	3,100	5,700
HVAC	600	5,000	2,800	36,000
SUBTOTAL	3,700	10,700	5,900	41,700
ANNUAL MAINTENANCE COSTS ($/YR)				
ENGINE SYSTEM	239	329	239	329
HVAC	0	0	90	400
SUBTOTAL	239	329	329	729
OVERALL ANNUAL COSTS ($/YR)				
MAINTENANCE	239	329	329	729
CAPITAL[2]	370	1,600	500	6,250
TOTAL[2]	549	2,759	829	6,979

Notes:

(1) For diesel engine, increase overall incremental ownership costs by $54 for 3 HP; and $168 for 50 HP.

(2) Assumes 10% capital recovery factor for 3 HP and 15% for 50 HP.

ORNL–DWG 81–19698

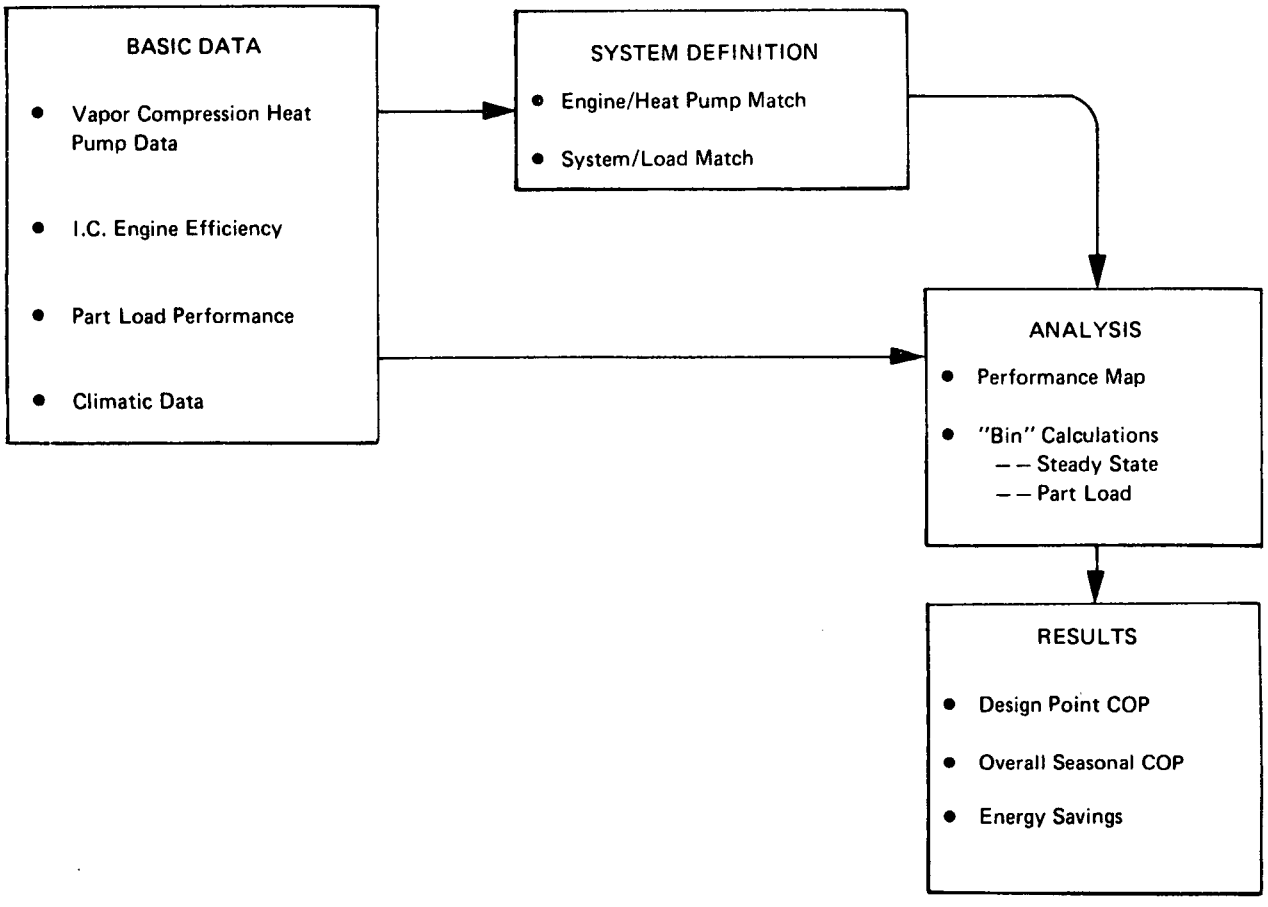

FIGURE 6 PERFORMANCE ANALYSIS METHODOLOGY

Figure 7 presents mechanical COP (cooling or heating effect achieved per unit shaft power*) and relative shaft power (relative to a design point of 1700 RPM and 47°F) for a Carrier two speed heat pump which was used as the basis for heat pump cycle performance. (Reference 34).

Figure 8 presents the equations and plotted results for system thermal COP as a function of engine efficiency and heat pump mechanical COP which were used in developing system thermal COP from known engine and heat pump characteristics.

The cooling mode data of Figure 8 can be used to support the reasoning that the cooling mode operating costs are basically a standoff with electric air conditioning. For a typical (spark ignition), engine efficiency of .27 and a mechanical COP of 3.8, the cooling thermal COP (cooling per unit fuel heat content) is about 1.0. The COP of an electric air conditioner (cooling per unit electric power input) is ordinarily in the vicinity of 3.0. Therefore, the economic standoff occurs when the cost ratio of electricity to fossil fuel (in comparable units) is 3.0**. Although the ratio of electricity to gas varies widely with location, a ratio of about 3 or perhaps 3 to 4 is typical. (Another perhaps simpler argument is that the ratio of shaft power to fuel input for an on-site I.C. engine is roughly equivalent to that of an electric motor supplied by a remote fossil fired power plant.) Therefore, it seems reasonable to base preliminary economic feasibility on energy savings in the heating mode and neglect energy savings in the cooling mode, even though the cooling mode, on the average, might show some advantage for the I.C. engine heat pump system.

Figure 9 presents thermal COP for a system characterized as follows:

- An I.C. engine with efficiency matching the natural gas efficiency curve of Figure 4.
- A vapor compression heat pump cycle having the mechanical COP and shaft power characteristics of Figure 7.
- Engine coupled to heat pump such that the ratio of heat pump speed to engine speed = $\frac{1750}{1100} = 1.59$. The engine is sized to require a brake mean effective pressure of 100 psi*** at the (low speed) design point of 1100 rpm and 47°F ambient.

---

* In estimating shaft power from the tabulated electric power input, an electric motor efficiency of .8 was assumed.

** For example, when the electric rate is 3.5¢/KWH = $\$12/10^6$ Btu-and the fuel cost is $\$4/10^6$ Btu.

*** The choice of 100 psi was selected, although not truly optimized, to provide BMEPs throughout the operating range which were sufficiently high for good engine efficiency without being high enough to degrade life.

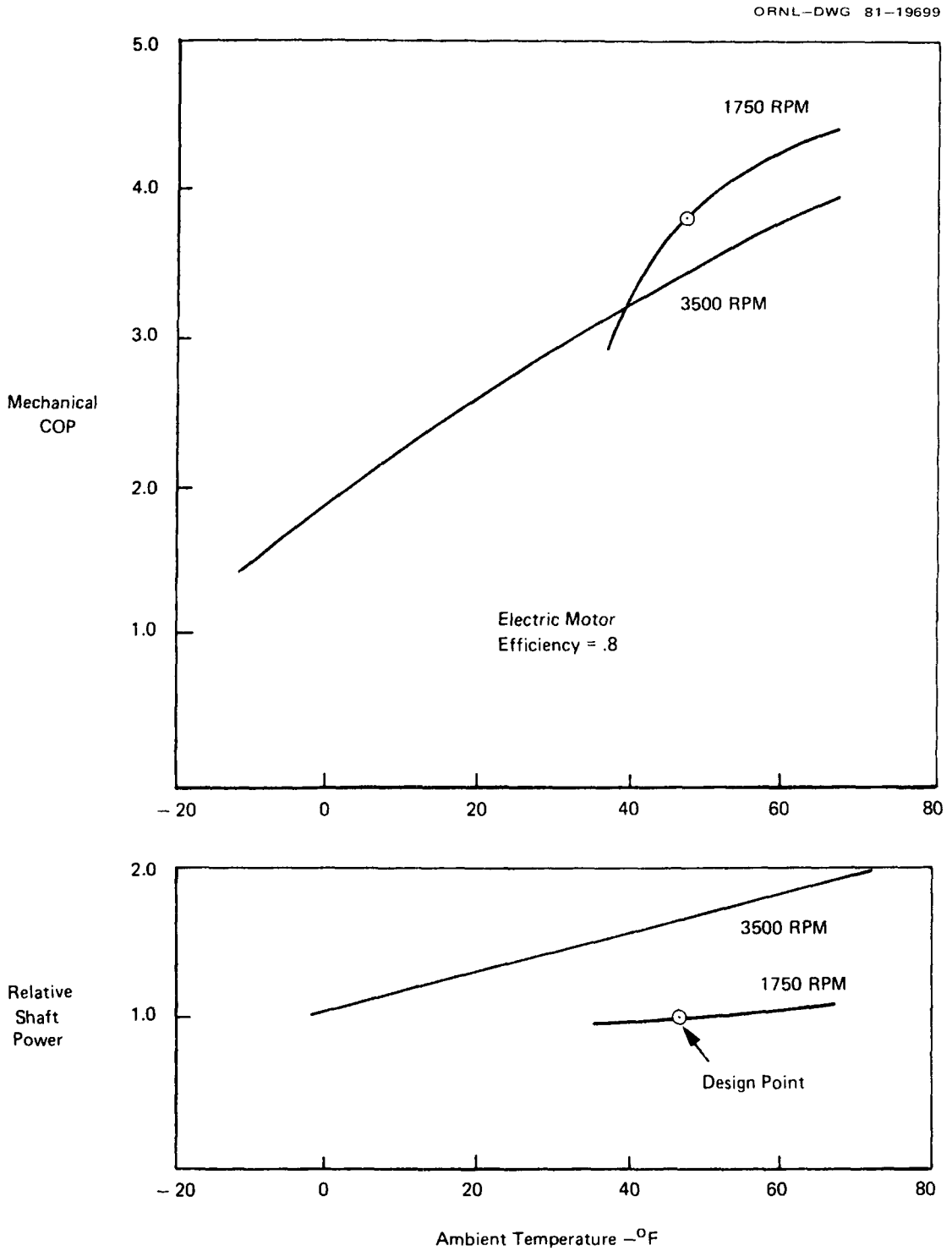

Source: Heat Pump Characteristics per Carrier 38TQ Data (Reference 34).

FIGURE 7 HEAT PUMP PERFORMANCE

ORNL–DWG 81–19700

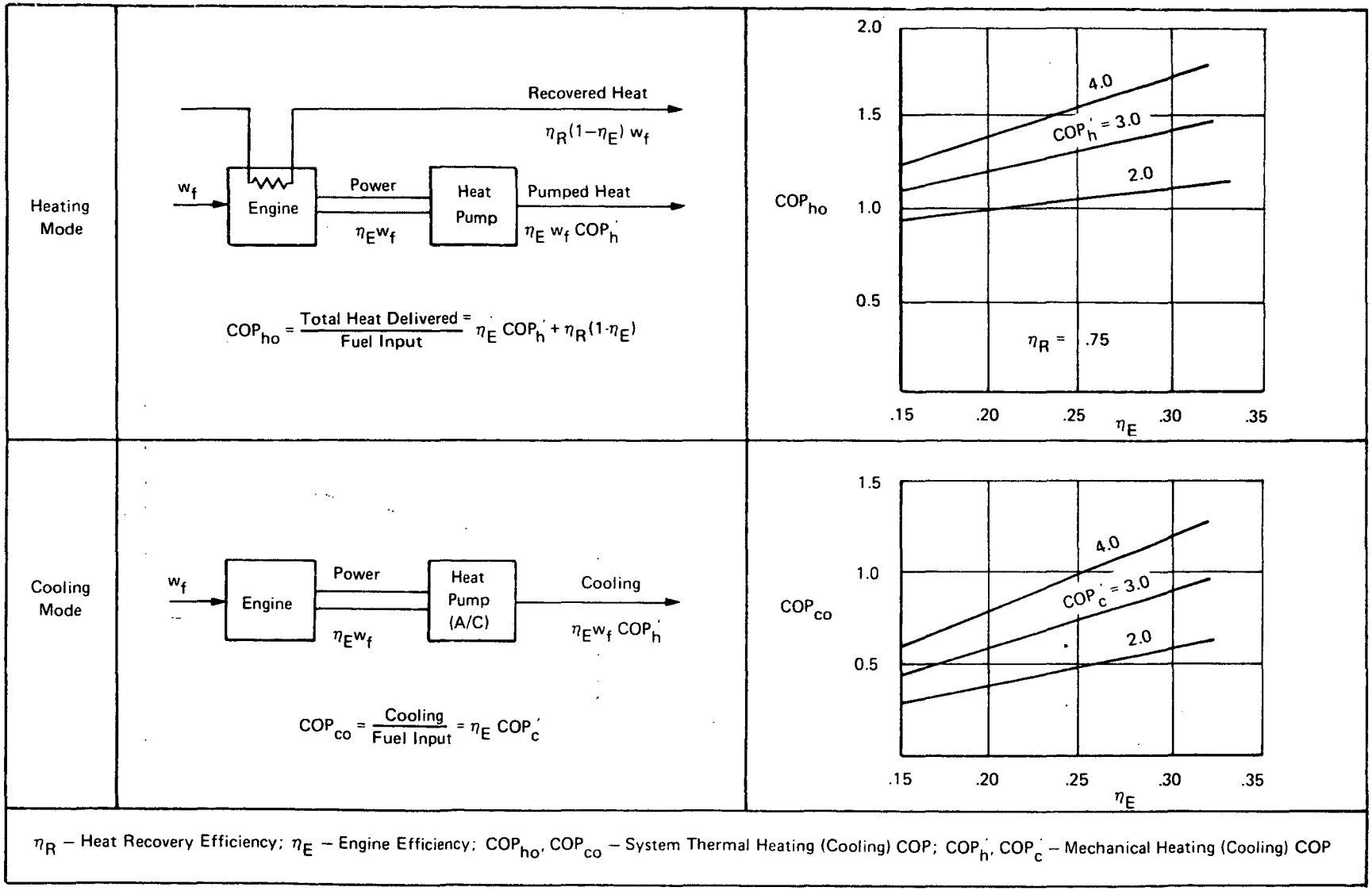

FIGURE 8 RELATIONSHIP OF SYSTEM THERMAL COP TO HEAT PUMP AND ENGINE CHARACTERISTICS

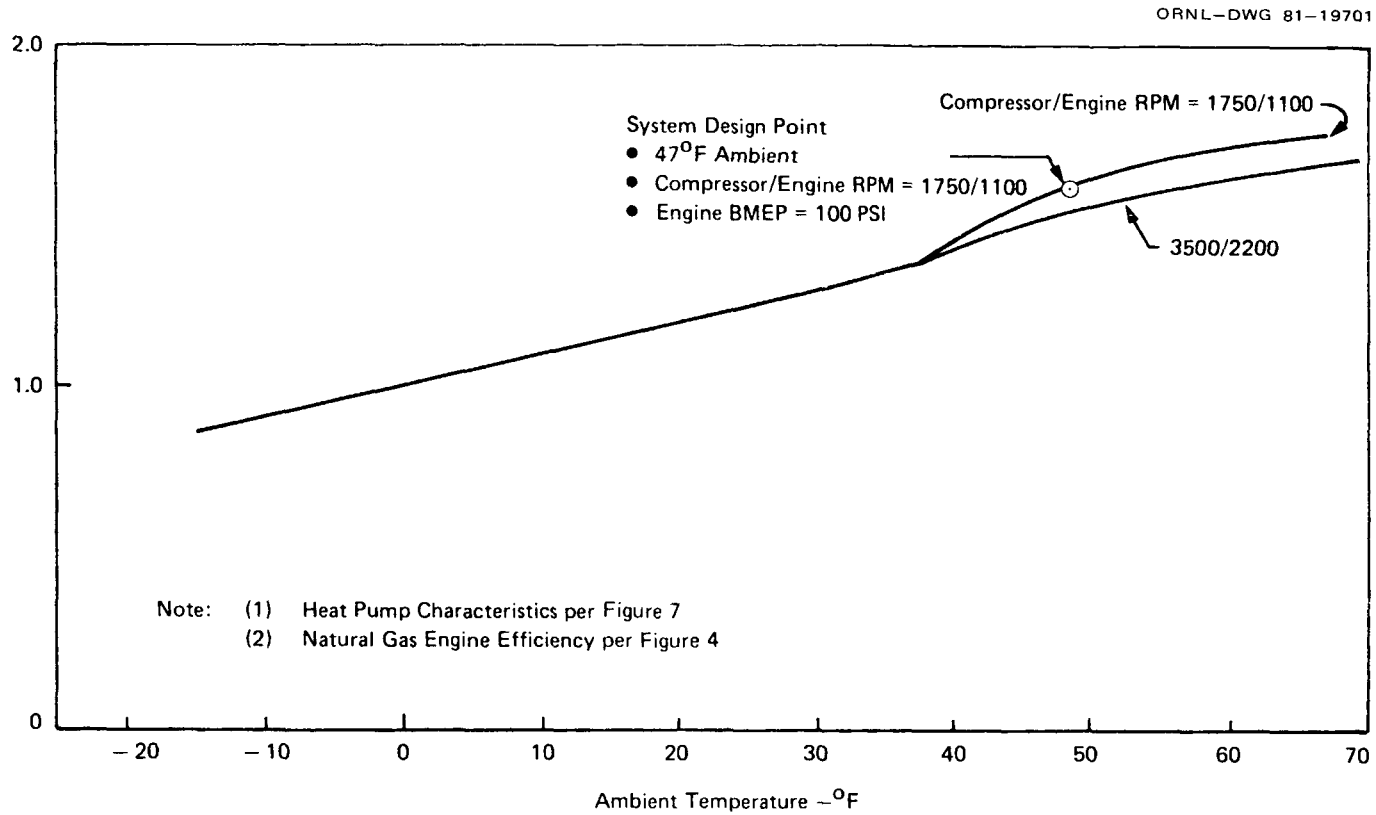

FIGURE 9 SYSTEM THERMAL HEATING COP

For the system shown, the design point COP was 1.59.

Figure 10 is a typical performance map showing the total heat output and shaft power requirements of the I.C. engine heat pump, as well as the building load (for a space heating only case) and the system operating line. As a "baseline" condition, the system/load balance point for each locality was selected such that only 5 percent of the heating degree days occurred at temperatures lower than the balance point temperature. Below the balance point, it was assumed the heating was accomplished by a fossil fired furnance with an efficiency (of thermal COP) of .7..*

The heating season thermal COP was obtained by a summation of the COPs for each temperature interval. Specifically, the procedural steps were:

a. For each temperature interval (i):

- Calculate load from building UA and/or hot water load;
- Determine steady state thermal COP from Figure 8 or Figure 9;
- Apply correction for cycling loss using ratio of building load to system heating capacity obtained from Figure 10 in conjunction with the plot of Figure 11.

b. Calculate seasonal COP from the summation of individual loads and thermal COPs for each temperature interval:

$$\text{Seasonal COP} = \frac{\text{Total Load Supplied}}{\text{Total Fuel Input}} = \frac{\sum_{i=1}^{i=n} (\text{Load})_i}{\sum_{i=1}^{i=n} \left(\frac{\text{Load}}{\text{COP}}\right)_i}$$

Additionally, energy consumption was computed from the overall total load and the seasonal thermal COP for both the I.C. engine heat pump system and conventional fossil furnace systems.

Engine size was computed from the absolute value of load at the balance point, in conjunction with known values of thermal COP and engine efficiency--and ratioed to a rating condition of 2200 rpm and 78 psi.

---

*Calculations show that the alternate assumption of parallel heat pump and furnace operation at temperature below the balance point made only a very minor improvement in performance (5%) for the baseline condition. However, for higher balance point temperatures, such that a significant portion of the heating load occurred below the balance point, the parallel operation could be substantially more effective.

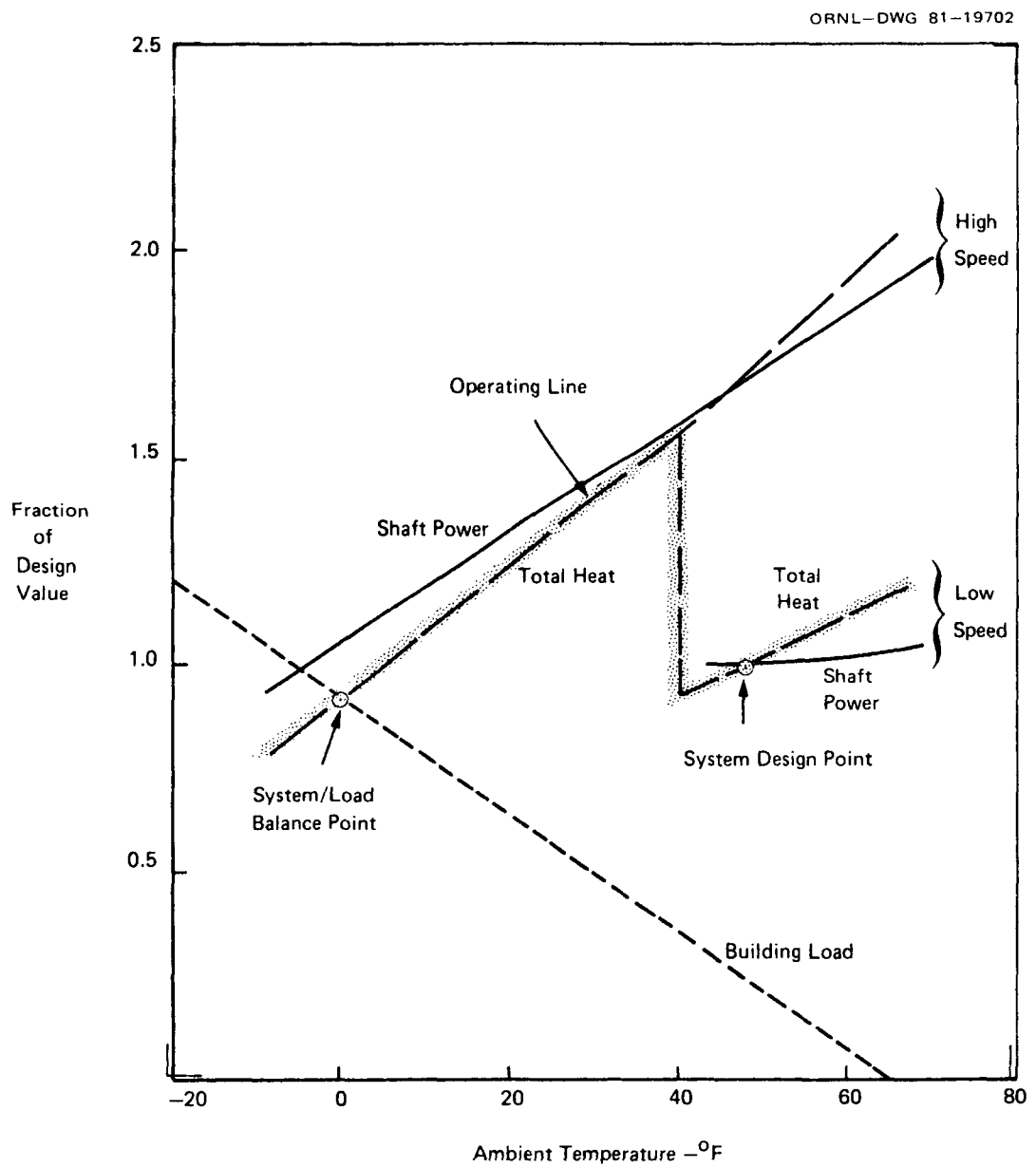

FIGURE 10 TYPICAL SYSTEM PERFORMANCE MAP

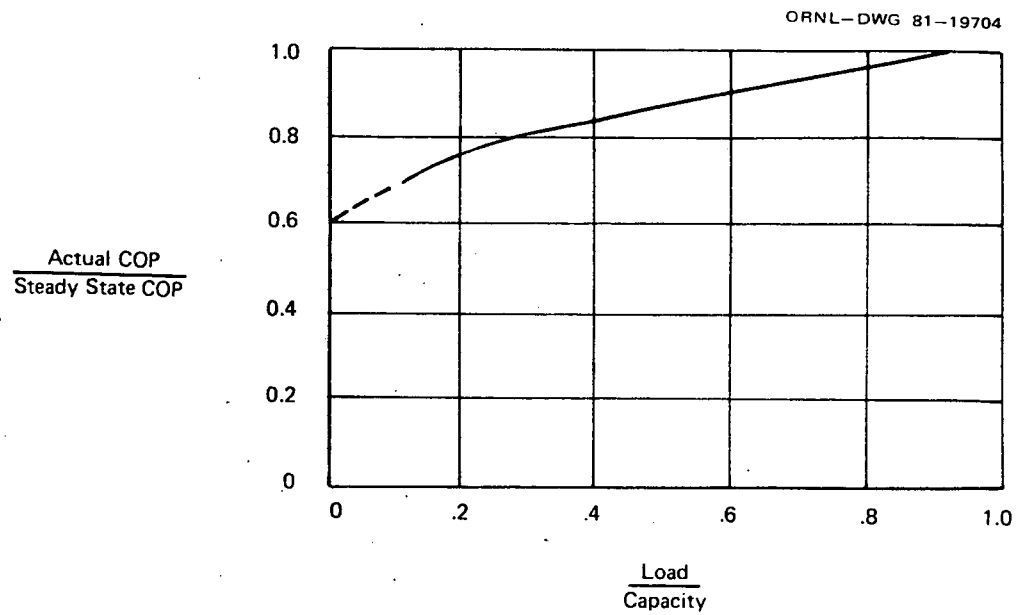

Source: Adapted from Parken, et al "Factors Affecting the Performance of a Residential Air to Air Heat Pump"(Reference 35).

FIGURE 11 PART LOAD PERFORMANCE

2. Results

Table 9 presents overall seasonal COP and energy savings relative to fossil furnaces having efficiencies of either .7 (current equipment) or .95 (advanced condensing furnaces which might have near term application for gas, but are unlikely to be applicable to oil). Also shown are the rated horsepowers for the various locations.

Note that the annual energy savings is proportional to both the absolute value of load and the difference in the reciprocals of the furnace efficiency and heat pump system thermal COP, i.e.:

$$\text{Energy Savings} = \text{Load}\left[\frac{1}{\eta_F} - \frac{1}{COP}\right]$$

Colder locations have both: (1) larger space heat loads, tending to increase the potential for savings and (2) lower heat pump system thermal COPs, tending to reduce the advantage of the heat pump system relative to the furnace.

When the efficiency of the fossil furnace is considerably less than that of the I.C. engine heat pump, the relative advantage of the heat pump decreases less than the load increases with the result that the maximum energy savings occur in the colder climates. However, when the furnace efficiency is high, and approaching the thermal COP of the I.C. engine heat pump, the relative advantage of the heat pump system is very sensitive to degredation in thermal COP and the annual energy savings tends to peak at some intermediate climatic region.

This effect is even more dramatically illustrated in Figure 12, where annual energy savings are plotted against the efficiency of the conventional furnace. For very low values of furnace efficiency, the energy savings for the various regions are essentially proportional to the heating degree days. However, as furnace efficiency increases, the energy savings in the colder locations (with lower thermal COPs) will decrease rapidly; and at very (and unrealistically) high furnace efficiencies, the warmer regions would show the larger energy savings.

Table 10 illustrates parametric studies for Knoxville, a mid climatic region. For these results, the load--or building size--was adjusted to be compatible with engine sizes of either 3 HP or 50 HP.* In addition to the baseline space heat case previously discussed, the general families of options include:

---

*It is implicitly assumed that space heat applications apply to buildings whose heat loss is, like a single family house, proportional to the product of heat loss coefficient and temperature difference.

TABLE 9

RESIDENTIAL SPACE HEAT RESULTS

EFFECT OF LOCATION AND FURNACE EFFICIENCY

LOCATION	SYSTEM/LOAD BALANCE POINT (°F)	Heating Degree Days (°F)	Seasonal COP	ANNUAL ENERGY SAVINGS RELATIVE TO FOSSIL FURNACE (10^6 BTU/YR) η_F=.7	η_F=.95	RATED HP (2200 RPM, 78 PSI)
LOS ANGELES	40	2061	1.46	18.4	9.1	.92
FORT WORTH	20	2405	1.30	19.0	8.2	2.15
KNOXVILLE	20	3494	1.21	25.2	9.5	2.18
BOSTON	10	5634	1.14	37.3	11.9	3.04
OMAHA	-5	6611	1.05	37.8	7.9	4.74
BISMARCK	-15	8851	.97	42.2	2.3	6.55

Notes:

1. Building heat loss coefficient (UA) = 12,000 BTU/DD
2. Engine/Heat Pump Characteristics per Figures 4 and 7.
3. Engine/Heat Pump System Design Point
   - 47°F ambient
   - Compressor/Engine RPM = 1750/1100
   - Engine BMEP = 100 PSI
   - Design Point COP = 1.59

TABLE 10

KNOXVILLE PARAMETRIC STUDIES

	THERMAL COP		ANNUAL ENERGY SAVING 10^6 BTU/YR			
			3 HP		50 HP	
	Design Point	Seasonal	η_F=.7	η_F=.95	η_F=.7	η_F=.95
BASELINE SPACE HEAT	1.59	1.21	34.7	13.1	578	218
SYSTEM/LOAD MATCHING						
• REDUCE DESIGN POINT BMCP TO 78 PSI	1.55	1.18	30.5	10.8	508	181
• RAISE BALANCE POINT TO 35°F	1.59	1.20	62.6	23.2	1050	388
HOT WATER OPTIONS						
• "RESIDENTIAL" SPACE HEAT & HOT WATER MIX(1)	1.59	1.23	44.6	17.5	735	290
• PRIMARILY HOT WATER(2)	1.59	1.53	122	62.7	2032	1045
STORAGE						
• ELIMINATE CYCLING	1.59	1.40	41.0	19.5	685	324
• ABOVE WITH DAYTIME OPERATION(3)	1.59	1.54	44.6	22.3	735	371
ADVANCED SYSTEM						
• 30% IMPROVEMENT IN COP AND NO CYCLING LOSS	1.94	1.66	59.0	32.0	980	530
ADVANCED FOR HOT WATER	1.94	1.84	162	92	2700	1560

Notes:

(1) "Mix" defined by hot water load = 2280 Btu/hr (20 x 10^6 Btu/yr) for UA = 500 Btu/hr°F (12,000 Btu/DD) during "non cooling" period of year (assumed to be 7,000 hrs.). On annual basis, hot water load ≈ 28% of total load.

(2) Simulated by continuous heat pump operation.

(3) Simulated by calculating thermal COP for an effective ambient temperature 20°F greater than the actual mean temperature corresponding to each temperature interval.

Arthur D Little, Inc.

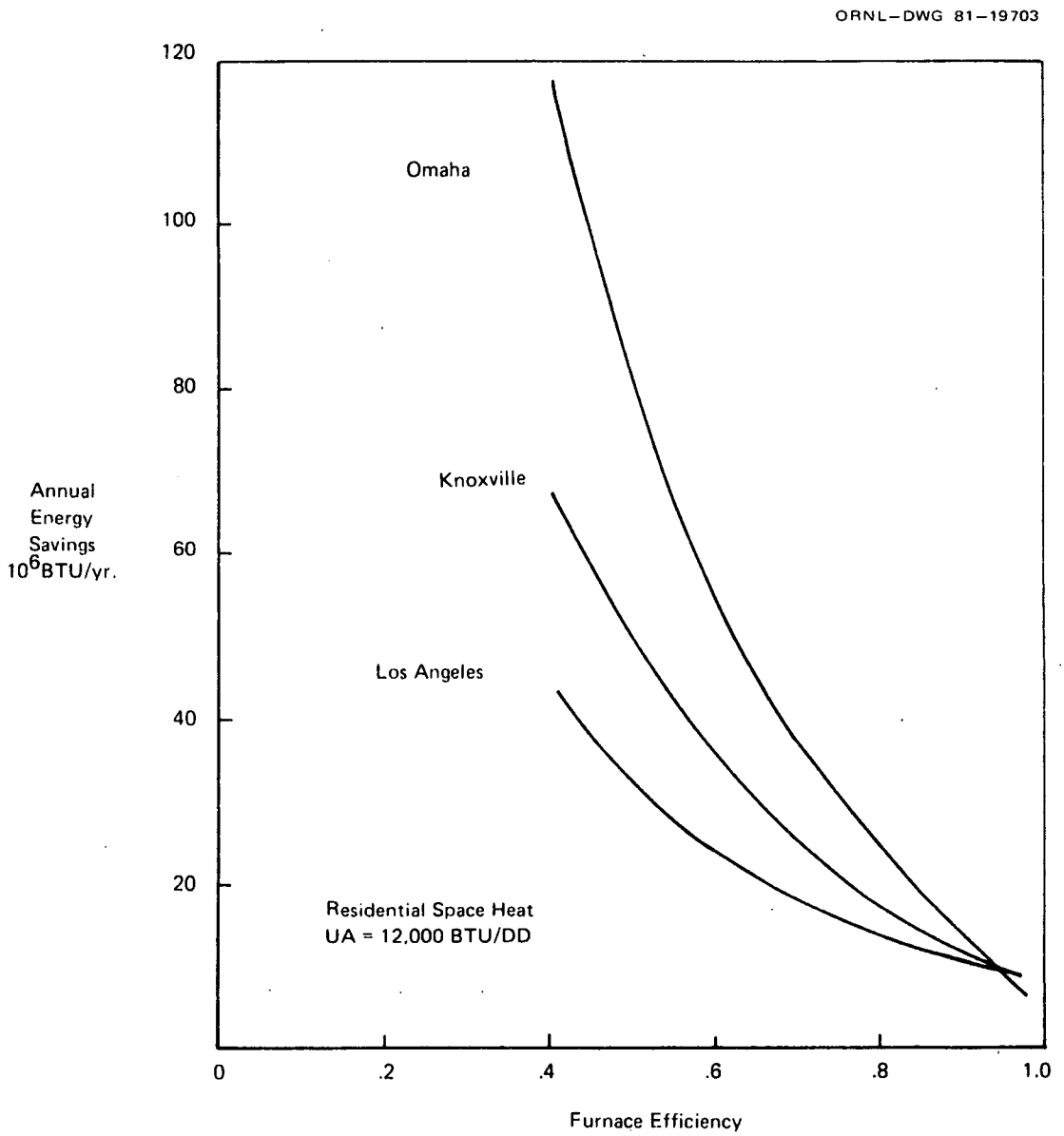

FIGURE 12 **ANNUAL ENERGY SAVINGS OF AN I.C. ENGINE HEAT PUMP SPACE HEAT SYSTEM RELATIVE TO FOSSIL FURNACES OF VARYING EFFICIENCIES**

- Alternate System/Load Matching Approaches

Reducing brake mean effective pressure to 78 psi has no major effect on overall system performance. The small loss noted resulted from generally operating at lower values of brake mean effective pressure and consequently lower engine efficiencies.

Raising the balance point from 20°F to 35°F did have a dramatic effect--primarily because it increased the load, or building size, that a given heat pump system could carry. The higher balance point results in a small heat pump operating at nearer its maximum capacity, as opposed to a lower balance point which results in a larger machine operating at a smaller percent of capacity. These calculations were based on the conservative assumption that operation below the balance point was accomplished solely by a fossil furnace with a combustion efficiency of .7. Parallel furnace and heat pump operation below the balance point would result in even improved performance. Clearly, in a real situation, the choice of the balance point is a critical optimization point. However, for the present preliminary assessment, the hot water only situation, to be discussed below, serves as an upper limit of achievable heat pump savings.

- Hot Water Options

The inclusion of the seasonally steady hot water load can greatly enhance heat pump performance, since it both allows the heat pump to operate at a more constant percentage of rated capacity throughout the season and also increases the seasonal average ambient temperature and thermal COP. Including a hot water load in the proportion typical of that of a single family residential building results in both a small increase in seasonal thermal COP and a relatively substantial increase in energy savings due to the more nearly constant seasonal load. (As noted in Table 10, the water heating load was considered for only the non-cooling months of the year, assumed to be 7,000 hours.)

As a limiting case, it was considered that the I.C. engine heat pump could be operated continuously for water heating service year round. This scenario results in a very dramatic increase in energy savings due in part to an increase in seasonal thermal COP but primarily due to the greatly enhanced load factor on the heat pump system.

- Storage

The role of storage was considered as a means of eliminating cycling and operating the heat pump preferentially in the daytime when ambient temperatures were higher. The results show some improvement, although not the dramatic effect achieved with the dedicated hot water load.

- Advanced Systems

As an indication as to possible improvements in I.C. engine heat pump systems, an advanced system was postulated based on a 30% improvement in heat pump vapor compression cycle COP and the elimination of cycling losses via storage. Relative to the baseline space heat system with current equipment (and cycling losses), improvements of the order of 50% and 100% were achieved for furnace efficiencies of .7 and .95, respectively.

- Advanced System for Hot Water

Lastly, the advanced system was applied to the dedicated hot water load resulting in approximately 50% improvement over the performance of current equipment with hot water.

In summary, the results of the Knoxville parametric studies indicate:

- The addition of the hot water load has a pronounced positive effect on energy savings;
- For space heat loads, it is important to carefully optimize the location of the balance point;
- Advanced systems (i.e., improved heat pump performance) had a strong effect on overall energy savings.

E. ECONOMIC RESULTS

Table 11 presents economic comparisons in the form of annual energy dollar savings for various system fuel price and furnace efficiency values. As shown, the larger system (50 HP) is able to show energy savings in excess of annual ownership costs for all combinations of fuel and furnace efficiency when operating as a hot water heater and also for many of the space heat options. On the other hand, the smaller system (3 HP) appears only able to show energy savings in excess of annual ownership costs for hot water heating service. It should be noted that the annual ownership costs in Table 9 are based on a capital recovery factor of 10% for the small (single family residential) system and 15% for the larger system anticipated to be used in light commercial or apartment service.

An alternate approach is to base the economic comparison on a simple payback defined as the ratio of the incremental first cost of the I.C. engine heat pump system to the net annual operating cost savings incorporating both the incremental energy savings and the incremental maintenance costs. The results shown in Table 12 indicate some very short paybacks for the large system, particularly in hot water usage. As was shown previously, the economics of the smaller system are not as good and the paybacks are commeasurately longer. Note that in the small system, several of the paybacks are infinite, indicating that the incremental maintenance costs are in excess of the energy savings.

TABLE 11

COMPARISON OF INCREMENTAL OWNERSHIP COSTS WITH ENERGY SAVINGS

CASE	ANNUAL ENERGY SAVINGS[1]--$/YR							
	3 HP (S.I. ANNUAL OWNERSHIP COSTS = 609)[2]				50 HP (S.I. ANNUAL OWNERSHIP COSTS = 1929)[2]			
	$4/10^6$BTU		$7/10^6$BTU		$4/10^6$BTU		$7/10^6$BTU	
	η_F=.7	η_F=.95	η_F=.7	η_F=.95	η_F=.7	η_F=.95	η_F=.7	η_F=.95
CURRENT								
SPACE HEAT ONLY	138	52	240	92	2270	870	4050	1530
HOT WATER PRIMARILY	489	251	850	440	8120	4190	14200	7300
ADVANCED								
SPACE HEAT	236	128	413	224	3930	2120	6850	3720
HOT WATER PRIMARILY	650	368	1130	645	11800	6250	11800	10900

Notes:

(1) Relative to conventional system of electric A/C and gas furnace--or gas furnace only.

(2) Relative to conventional system of electric A/C and fossil furnace. If conventional system is furnace only, increase 3HP cost by $220; 50 HP cost by $5050. Assumes capital recovery factor of .10 for 3 HP; and .15 for 50HP.

TABLE 12

SIMPLE PAYBACK

CASE	3 HP SPARK IGNITION				50 HP SPARK IGNITION			
	$4\$/10^6$BTU		$7\$/10^6$BTU		$\$4/10^6$BTU		$\$7/10^6$ BTU	
	$\eta_F=.7$	$\eta_F=.95$	$\eta_F=.7$	$\eta_F=.95$	$\eta_F=.7$	$\eta_F=.95$	$\eta_F=.7$	$\eta_F=.95$
CURRENT								
SPACE HEAT ONLY	∞	∞	∞	∞	5.5	20	2.9	9.0
PRIMARILY HOT WATER	14.8	∞	6.1	18.5	1.4	2.8	.8	1.6
ADVANCED								
SPACE HEAT	∞	∞	21.3	∞	3.0	5.9	1.7	3.2
PRIMARILY HOT WATER	9.0	29.0	4.2	9.1	.93	1.8	.58	1.0

Notes:

(1) Simple payback = incremental capital cost/annual incremental energy and maintenance costs.

(2) Conventional system is electric A/C and fossil furnace.

(3) Energy savings based on Knoxville climatic data.

It should be recognized that all the space only results might be considerably more promising with better optimization of balance point temperature.

F. INSTITUTIONAL/OPERATIONAL FACTORS

In addition to the economic potential, some operational and institutional considerations which may have either positive or negative impacts on the marketability and/or acceptability of I.C. engine driven heat pumps are as follows:

- Utility Load Interaction

The widespread use of fossil fired heat actuated heat pumps would tend to both reduce fuel consumption for winter heating and tend to eleviate peak demands for electric air conditioning in summer. The reduction of summer peak should generally aid most electric utilities. Also, many gas utilities may profit from having a more seasonally balanced demand profile.

- Maintenance Capabilities

I.C. engine heat pumps may require maintenance skills different than those currently required for servicing HVAC equipment. Assuming that these maintenance costs are not excessive, they may in the long term promote business opportunities. However, in the early stages of the industry, there will be inevitably problems resulting from lack of experience on the part of installers and maintenance personnel, as is currently being experienced in the solar industry.

- Noise Isolation

Achieving a high degree of sound isolation can be very difficult and/or very expensive. The unenclosed engine is likely to produce sound levels of the order of 85-100 dBA at 3 feet. Reducing this level by approximately 20 dBA may be possible with a composite wall enclosure, such as used in the FIAT Totem. Further reductions could be very expensive.

It appears that moderate sound isolation measures, such as the composite wall enclosure should be sufficent to reduce the noise to a level compatible with other types of outside HVAC, such as air cooled condensers.

However, it is not clear, if, being a new product, more stringent requirements might be imposed either by consumer acceptance or government regulations.

- Emissions

Gas-fired I.C. engine driven heat pumps will produce significantly larger quantities of NO_x than gas furnaces meeting the same load. To date,

emission control has generally not been required for applications, such as engine generator sets (except in California). However, if control is required, it can be accomplished reasonably simply with catalytic converters.

Diesel engines produce less NO_x than natural gas engines. However, to the extent that cleanup is required, it is likely to be more difficult.

- Regulatory Considerations

Design requirements and costs associated with noise emissions are likely to be the subject of regulations still undefined. If these are unnecessarily stringent, severe cost penalties may result.

- Space Requirements

The envelope volume required for an I.C. engine driven heat pump with sound enclosure is likely to be larger than that required for the split system condenser box of electric air conditioning. In residential applications, this may be considered a problem due to aesthetics and/or reduction of back yard area. On larger, light commercial or multifamily units, this problem is less likely to be severe.

- Financial Incentives

Clearly, financial incentives dealing with energy conservation and such as are being currently applied for solar can have a profound effect on the economic feasibility of the I.C. engine driven heat pump.

G. OVERALL EVALUATION

The economic results have indicated that the I.C. engine heat pump can be very promising in the larger sizes, particularly when applied to hot water loads and/or space heat with carefully optimized balance points. Achieving economic feasibility with the smaller system is considerably more difficult, to a large extent because the maintenance costs per unit horsepower are much larger with small equipment.

Likewise, consideration of noise, emission control and space requirements may be more difficult on small systems.

On balance, the I.C. engine heat pump appears quite promising and in light of the availability of the key components, such as the engine and the vapor compression cycle, is a good candidate for near term applications.

H. KEY AREAS OF UNCERTAINTY

Key areas of uncertainty include:

- Installed cost of production systems;
- Overall systems integration;
- Requirements and costs for noise, isolation systems;
- Emission control for diesels.

VI. DEVELOPMENT PROGRAM OPTIONS

(TASK 4.0)

A. RATIONALE FOR I.C. ENGINE HEAT PUMP DEVELOPMENT PROGRAMS

The results of the I.C. engine driven heat pump program have indicated that theses systems might have favorable economics, particularly in multifamily and light commercial applications. These economics would be associated with fossil fuel savings of roughly 50% as compared to the use of these fuels in a conventional heating system.

The I.C. engine/heat pump systems discussed in this report represent the only such engine driven heat pump options which can be implemented in the near-term. This is due to the fact that the advanced engine options being considered (Stirling engines, Brayton cycles) are all in an R&D stage with limited, if any, long-term operational or cost experience. The I.C. engine/heat pump option, therefore, represents a unique opportunity for DOE to develop and assist in the commercialization of an engine driven heat pump system in a near-term time frame. The benefits which would accrue from such a program include:

- The development of a system which shows promise of being commercially viable now and in which industry has already shown considerable commercial interest.
- Establishing system cost/technical specifications and operating parameters which can be a standard by which more advanced engine driven heat pump systems can be evaluated.
- Gathering information relative to institutional, marketing, and environmental issues which will be common to all engine driven heat pump programs.

B. OVERALL PROGRAM PLAN

Figure 13 shows the elements of the suggested program plan. These elements are:

- The near-term demonstration of an I.C. engine driven heat pump in a real application.
- Performance simulation analyses to define effects of system and application parameters and identify R&D programs which could significantly improve system technical and economic performance characteristics.

ORNL–DWG 81–19705

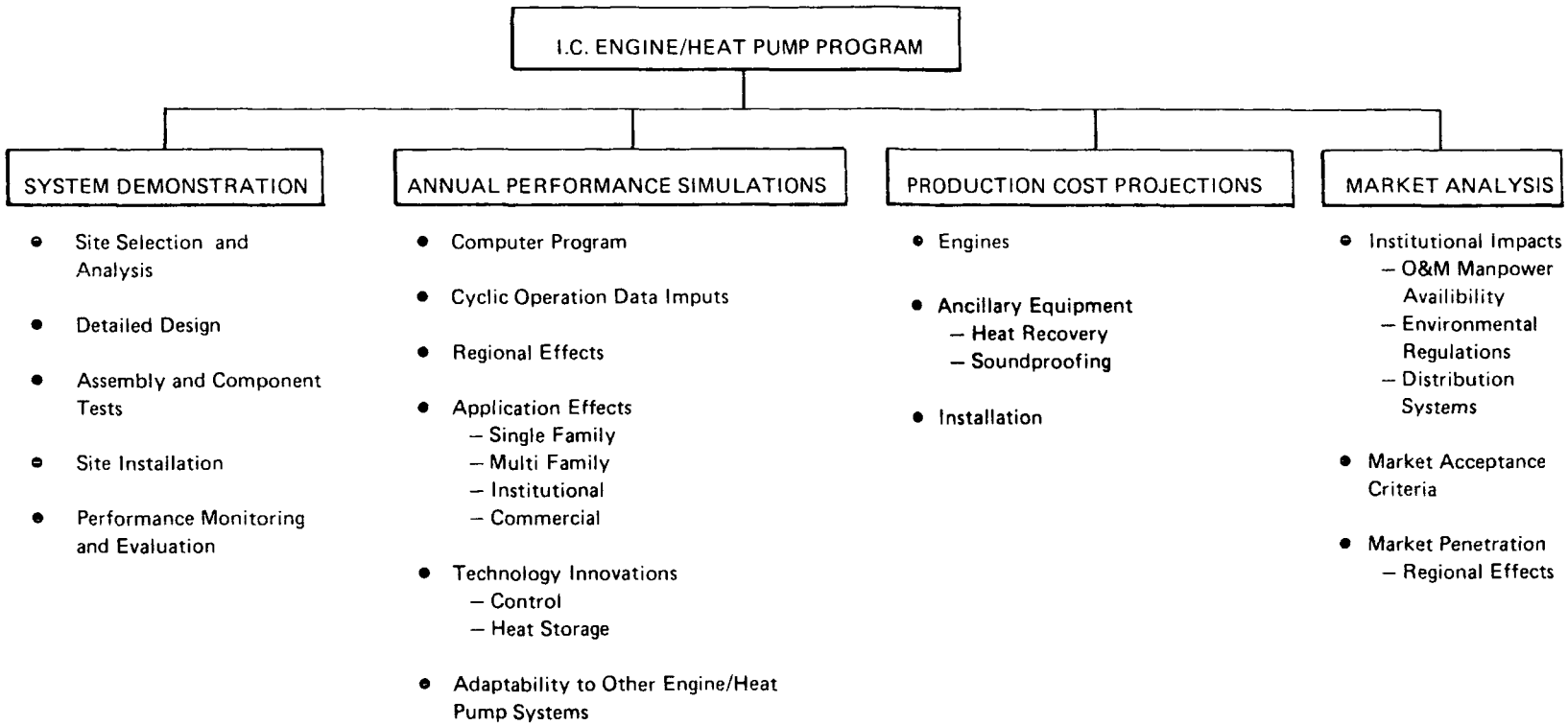

FIGURE 13 I.C. ENGINE HEAT PUMP DEVELOPMENT PROGRAM OPTIONS

- The detailed evaluation of Manufacturing and Cost issues to better determine system economics as a function of production level.

- The analyses of potential Markets for these systems and the national impacts resulting from realistic market penetration scenarios.

Each of these program elements is discussed in more detail below.

C. SYSTEM DEMONSTRATION

The considerable commercial interest exhibited by industry in Europe, Japan, and the U.S. in I.C. engine driven heat pumps provides assurance that one or more demonstration systems at the residential or light commercial capacity level is warranted. By supporting such demonstrations, DOE would assist U.S. manufacturers in the commercialization process plus help in the expeditious resolution of technical/cost issues which only operating experience can uncover.

It is important that any such demonstration program be done with careful planning to insure maximum technical and commercialization impact. Therefore, a phased analyses, design, and installation program is suggested per Figure 14. The tasks of the program are:

1. Application Analyses and Site Selection

During this task, several potential applications at specific sites would be analyzed and reviewed. From these application(s) one or more site would be selected for demonstration(s) based on selection criteria, such as:

- Potential for large markets for systems with similar characteristics

- Compatibility with equipment which can be installed in the near term.

- Possible institutional arrangements which will facilitate the installation and monitoring of the demonstration systems.

2. System Design(s)

For those application(s) identified in Task 1.1 detailed system designs and cost estimates would be prepared specifying:

- The engine which will be used to drive the heat pump and any modifications required for this application.

- The type of drive which will connect the engine to the heat pump compressor.

ORNL-DWG 81-19706

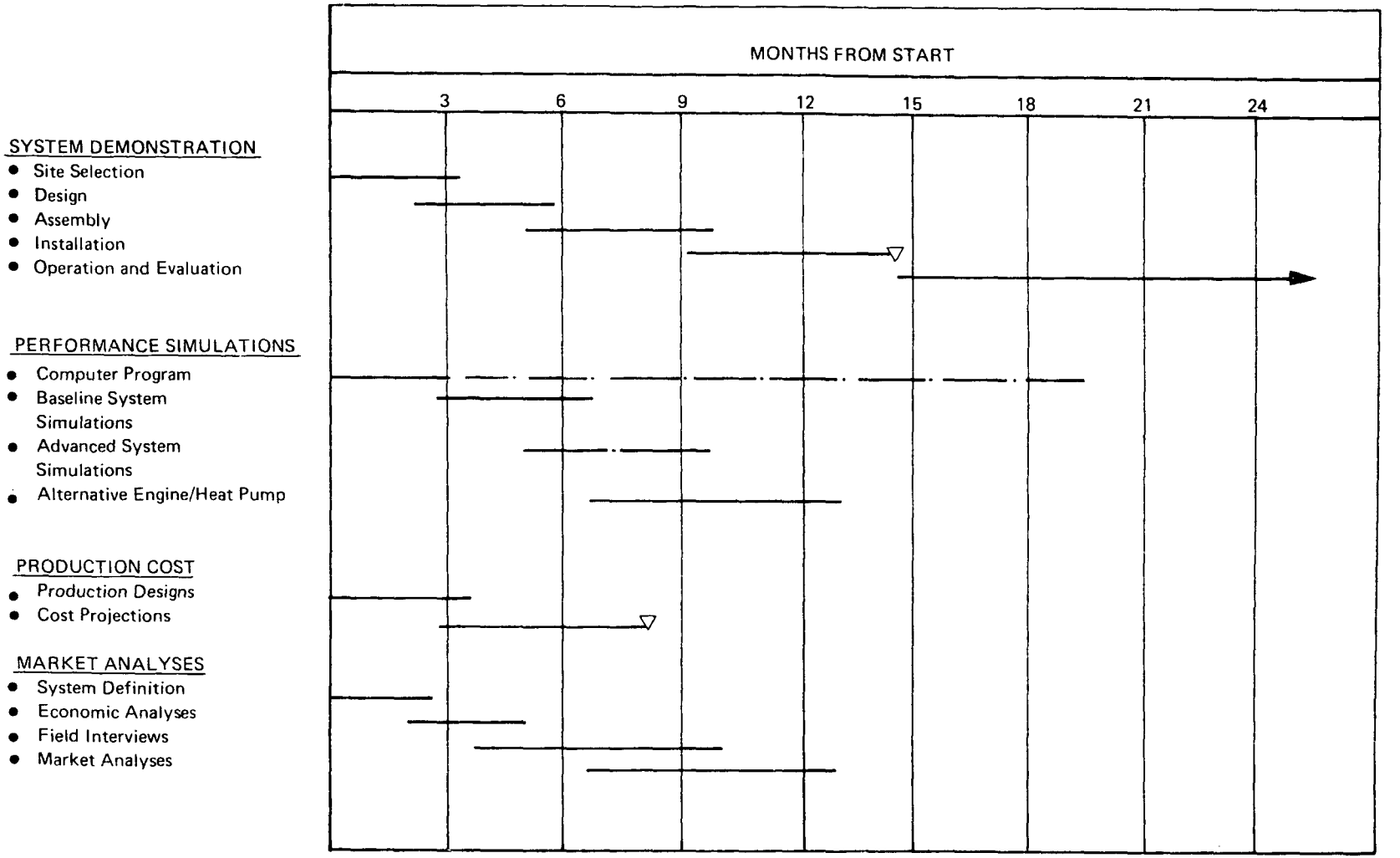

FIGURE 14 PROGRAM SCHEDULES

Arthur D Little, Inc.

- The heat pump which will be used and any modifications required for this application.

- Special enclosures, mufflers, etc. which will be used to result in acceptable noise, vibration, and emission levels.

- How the system will be interfaced with the building heating system and the details of overall system control.

- Instrumentation and recording equipment which will be used for system performance monitoring.

The above information would be used to prepare detailed cost estimates for system fabrication, installation, and testing.

3. Detailed Design and System Assembly and Installation

Based on the preliminary designs of Task 1.2, detailed designs would be prepared. The system would then be assembled and short-term testing undertaken at the contractors facilities to ensure that operation is consistent with projections and to allow for modifications as deemed necessary before installation.

The system would then be installed at the demonstration site and undergo additional checkout testing to ensure proper integration with the building heating system.

4. Operation and Evaluation

Once installed, the performance of the system would be closely monitored for a period of three years. Data would be taken on such operating characteristics as:

- Thermal performance (COP)
- Cycling characteristics (on-off cycles, cycle duration, etc.)
- Emission levels
- Noise/Vibration levels
- Frequency and types of repairs required

D. ANNUAL PERFORMANCE SIMULATIONS

Preliminary performance estimates sufficient for making overall judgements as to such operating parameters as annual COP can be made with acceptable accuracy using hand calculations and aggregated data on climatic conditions, and system performance levels.

However, it would be necessary to develop a computer program to better define the detailed operation characteristics (cyclic operation, etc.) of a range of engine/heat pump systems serving a variety of load profiles and operating in different geographical locations. Such a computer model would greatly facilitate exploring the impact of the many design parameters which can be considered for system operation; for example:

- Thermostat control options to reduce cycling;
- Thermal storage subsystem capacity requirements and cycling;
- System/load balance point
- Engine options (both I.C. engines and external combustion engines);
- Engine/heat pump matching.

In consideration of the above, this program element would consist of three tasks:

1.0 Computer Program Preparation

During this task, a computer program would be prepared which simulates the performance of engine/heat pump systems and can accept as inputs:

- Weather bureau tapes to provide the climatic conditions under which both the buildings and heat pump evaporator must operate;
- Building design parameters (U factors, thermal mass factors, water draw schedules, etc.) which effect the load profile;
- Engine characteristics - both steady state and part load;
- Heat pump characteristics - both steady state and part load;
- Thermal storage characteristics (if used)
- Control arrangements.

2.0 Performance Simulations - Baseline Systems

The program developed under Task 1 would be utilized to predict the detailed performance characteristics of I.C. engine/heat pump systems operating in conventional modes which can be implemented in the near term. These simulations would cover a range of applications (single family houses, commercial buildings, hot water loads, etc.) and would be done using weather tapes from a variety of geographical locations.

3.0 Performance Simulations - Advanced Systems

In this task, the effect of advanced system components and operating modes (thermal storage, etc.) would be quantified to determine which ones show good promise of improving system economic performance.

E. PRODUCTION/INSTALLATION COST PROJECTIONS

The I.C. engines and transmission trains which are being considered for use in the heat pump system are generally produced in relatively modest quantities for specialized applications. As such, the cost estimates for the demonstration system (Task 1) will not reflect the ultimate potential for the I.C. engine/heat pump system. In fact, the cost projections of the Phase 1 program reported herein do not reflect possible cost reductions resulting from the larger markets for high reliability I.C. engines which would result if the heat pump systems gained market acceptance. For example, the cost of mass produced small general purpose industrial engines is about $30/HP while that of similar, but lower volume, engines is about $70/HP. Therefore, if a large market for I.C. engine driven heat pump systems were to develop, it would be reasonable to expect the engine costs to drop significantly from present levels.

This program element would consist of the two tasks indicated in Figure 14.

1. Preliminary Production Design

The conceptual designs of this report, as well as the system designs of Section B above, are based on available I.C. engines, heat pump systems, controls, and drive trains. In this task, preliminary designs for fully integrated systems would be prepared assuming that all major subsystems are designed specifically for this application. Such designs would include:

- Modifications made to engines to improve life, reliability, etc.
- Modifications made to heat pumps (open compressors, etc.) for use in engine driven systems.
- All packaging required for easy installation and vibration control.
- The mufflers, etc. required for noise and emission control.

These designs would be in suffcient detail to allow for making production cost estimates.

2. Production Costs/Facility Requirements

The preliminary designs of Task 1 would be used as the basis for making production cost estimates over a range of production volumes which might be expected for such systems. Preliminary analysis indicates that reasonable production quantities might be 1,000, 10,000 and 100,000 units per year for systems in the size range of interest.

In making the above estimates, the possible need for new production facilities for major components would be identified. The capitol requirements of significant new product facilities will be identified to determine if they could pose a significant barrier to the large scale introduction of such systems.

F. MARKET ANALYSIS/INSTITUTIONAL ISSUES

The potential market for I.C. engine/heat pump systems will be important in influencing the committment of industry in this field and in estimating the potential national benefits from this (and other) engine design heat pump programs. During this task, the potential market for heat pump systems would be estimated as a function of time (1985, 1990, 2000) based on a range of assumptions pertaining to:

- The production cost of the systems.
- The projected costs for electricity, oil, and gas.
- The performance of the system (including regional variations).
- The infrastructure requirements for system manufacture and installation.
- The existence of institutional factors such as building codes, environmental legislation, etc. which could influence system acceptability.
- Various financial inventives (tax credits, etc.) which could effect system economics from the customer point of view.
- National and regional building trends.

The overall approach which would be pursued in the market assessment is displayed in Figure 15.

G. PROGRAM SCHEDULES AND COST

A possible schedule for the recommended program elements is shown in Figure 14. The schedule indicates that demonstration systems could be operational in less than 16 months after potential demonstration sites and program participants are identified (possibly with a Program Opportunity Notice). The other program activities can all be completed within one year after they are initiated.

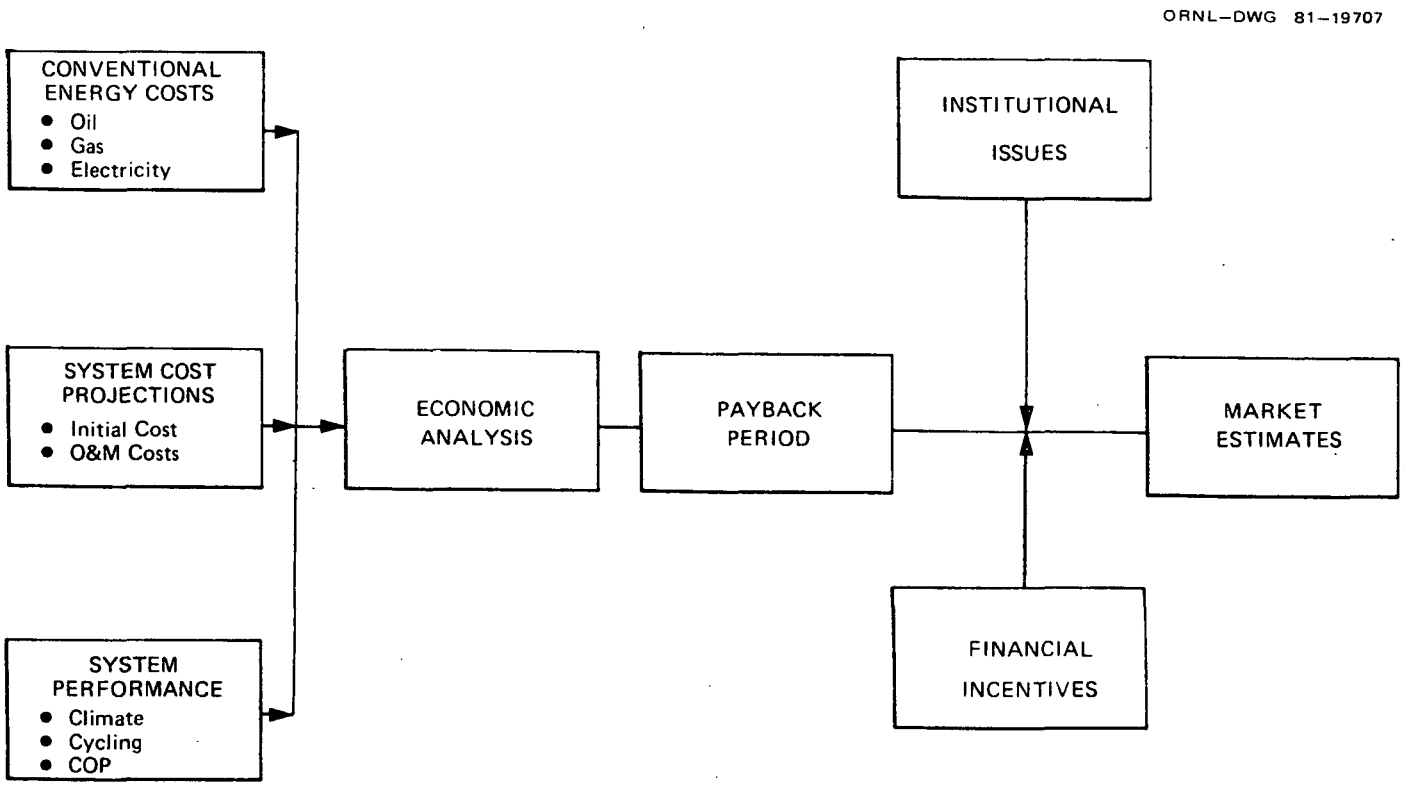

FIGURE 15 MARKET ASSESSMENT METHODOLOGY

Arthur D Little, Inc.

SYSTEM DEMONSTRATION	
SITE SELECTION AND ANALYSIS	$100,000
DESIGN	150,000
ASSEMBLY*	250,000
INSTALLATION AND CHECKOUT	100,000
(TWO YEARS) OPERATION AND EVALUATION	300,000
	$900,000
ANNUAL PERFORMANCE SIMULATIONS	
(BASELINE) COMPUTER PROGRAM	$ 60,000
(BASELINE) SIMULATIONS	60,000
ADVANCED CONCEPTS SIMULATIONS**	40,000
ALTERNATIVE ENGINE/HEAT PUMP	50,000
	$210,000
PRODUCTION COST ESTIMATES	
PRODUCTION DESIGNS (CONCEPTUAL)	$ 40,000
PRODUCTION COSTS	40,000
FACILITY REQUIREMENTS	20,000
	$100,000
MARKET ANALYSES	$150,000

*Including Monitoring Equipment and Instrumentation
**Including Computer Program Modifications

VII. REFERENCES

1. Kennedy, Dan "Energy Conservation--The Potential of the Heat-Actuated Heat Pump", A.G.A. Monthly, April 1973

2. Sarkes, L.A., Nicholls, J.A., Menzer, M.S., "Gas-Fired Heat Pumps: An Emergining Technology", ASHRAE Journal, March 1977

3. Rosenberg, Robert B., "Improving Gas Appliances for Tomorrow's Market", A.G.A. Monthly, December 1978

4. American Gas Association Research & Development Annual

5. Solar Heating and Cooling Research and Development Project Summaries, U.S. Department of Energy, May 1979, Document No. DOE/CS-0010

6. 'Heat Pump Technology--A Survey of Technical Development Market Prospects", Prepared for U.S. Department of Energy by Gordian Associates, June 1978, Report No. HCP/M2121-01

7. Reynolds, P.J., Lunnas, A., "Research and Development Needs in Heat Pump Technology", Proceedings of 3rd Annual Heat Pump Technology Conference, Oklahoma State University, April 1978

8. J. D. Ryan Trip Report on European Visit in March 1980, DOE internal communication

9. Service Requirements of Gas Engine-Powered Air Conditioning Equipment, Project #1547-IB, Washington Gas Light Company, October 25, 1961

10. Five Years' Operating Experience with a Thermal Pump, Washington Gas Light Company, February 1967

11. Telephone conversation with Messrs. Dennis Banks and Onan Kruz of Onan Division, Studebaker-Worthington on August 1, 1980

12. "Powertalk 55 Special Heat Pump Edition", published by Ford of Europe.

13. Telephone conversation with Dr. Sam Sheldon of Georgia Institute of Technology on November 24, 1980

14. Telephone conversations with Messrs. Peter Trombley and Carl Baldwin of Waukesha Engine Division, Dresser Industries, August through December 1980

VII. REFERENCES (Cont'd.)

15. Gas Engine Market Study, Prepared for American Gas Association by William E. Hill & Company, Inc., January 26, 1968

16. Telephone conversation with Mr. George Long of Institute of Gas Technology, July 8, 1980

17. Telephone conversation with Messrs. Dave Manro and Dick Hopkin of Engine Power Company, June 30 and July 1, 1980

18. Telephone conversations with Mr. John Henderson of Caterpillar Tractor Company, July through October 1980

19. Telephone conversation with Mr. James Calm of Argonne National Laboratories, December 13, 1980

20. Telephone conversation with Dr. Hunt Sutherland of Lone Star Gas Co., July 1980

21. "Totem Total Energy Module" brochure prepared by FIAT Auto Group

22. Telephone conversation with Mr. Max Shilstone of Stewart Stevenson on December 12, 1980

23. "Briefing the Record", Mechanical Engineering, April 1980

24. Telephone conversation with Mr. David Taylor, Thermo-King Corporation, August 4, 1980

25. Telephone conversation with Mr. Alfred Matner, Office of Chief Warrant Officer, United Coast Guard, August 13, 1980

26. Moon, John, "Diesels for Irish Coastal Warning Lights", Diesel and Gas Turbine Progress Worldwide, October 1977

27. Telephone conversation with Mr. Donald Schitt of Kohler Company, July 29, 1980

28. Telephone conversations and meeting with Messrs. Peter Frayling and S.R. Bishop of Lister Diesels, Inc., October 3, 1980

29. Bosch Automotive Handbook, copyright Robert Bosch GmbH 1977 Stuttgart

VII. REFERENCES (Cont'd.)

30. "Mechanical and Electrical Cost Data 1980", Robert Shaw Means Co., Inc.

31. Coleman, W.R., "Heat Pump Reliability in Northern Climates", Proceedings of 3rd Annual Heat Pump Technology Conference, Oklahoma State University, April 1978

32. ASHRAE 1976 System Handbook, Chapter 43, "Energy Estimating Methods"

33. Engineering Weather Data, Air Force Technical Manual AFM 88-29, July 1978

34. "Carrier Weathermaster III, Two Speed Heat Pump System", Carrier Corporation Form 38TQ-1P, 1978

35. Parken, Walter H., "Factors Affecting the Performance of a Residential Air to Air Heat Pump"

INTERNAL DISTRIBUTION

1. F. C. Chen
2. R. S. Carlsmith
3. F. A. Creswick
4. J. L. Crowley
5. R. C. DeVault
6. R. D. Ellison
7. P. D. Fairchild
8. W. Fulkerson
9. V. O. Haynes
10. F. R. Kalhammer, Consultant
11. S. V. Kaye, Consultant
12. T. R. LaPorte, Consultant
13. R. N. McGill
14. J. W. Michel
15. R. E. Minturn
16. W. R. Mixon
17. L. I. Moss, Consultant
18. J. C. Moyers
19. E. A. Nephew
20. G. T. Privon
21. C. D. West
22. W. H. Williams, Consultant

23-24. Central Research Library
25. Document Reference Section
26. Laboratory Records - RC
27-28. Laboratory Records Department
27-28. Laboratory Records Department
29. ORNL Patent Section

EXTERNAL DISTRIBUTION

30. C. A. Allen, Energy Information Administration, EI-60, Forrestal Building, 1000 Independence Avenue S.W., Washington, DC 20585
31. John Andrews, Solar Technology Group, Building 701, Brookhaven National Laboratory, Upton, NY 11973
32. B. Backstrom, Chalmers University of Technology, Jordvarmegruppen, S-41296, Goteborg, Sweden
33. James Bard, Executive Vice-President, Bard Manufacturing Co., Inc., P. O. Box 607, Bryan, OH 43506
34. E. K. Bastress, Energy Conversion & Utilization Technology Div., CS-142, Forrestal Building, Department of Energy, Washington, DC 20585
35. J. Berghmans, Katholieke Universiteit, Institut Mechanica, Celestijnenlaan 300 A, B-3030 Heverlee-Belgium
36. James E. Bose, School of Technology, Oklahoma State University, Stillwater, OK 74078
37. Torbjorn Bostrom, Director, Dept. of Energy Systems & Energy Supply, Swedish Council for Bldg. Res., Sankt Goransgatan 66, S-112 33, Stockholm, Sweden
38. A. T. Braun, Tectonics Research, Inc., 9556 W. Bloomington Freeway, Minneapolis, MN 55431
39. James M. Calm, Project Manager, Heat Pump Development, Electric Power Res. Inst., 3412 Hillview Avenue, Palo Alto, CA 94303
40. W. R. Coleman, Residential & Commercial Services, American Elec. Power Services, 180 East Broad, Columbus, OH 43201
41. Kenneth Cuccinelli, Division of Marketing Services, American Gas Association, 1515 Wilson Blvd., Arlington, VA 22209

American Gas Association, Research & Development, 8501 E. Pleasant Valley Rd., Cleveland, OH 44131

43. R. J. Denny, Air-Conditioning & Refrigeration Institute, 1815 N. Fort Meyer Drive, Arlington, VA 22209
44. Richard Dougall, Dept. of Mechanical Engineering, University of Pittsburgh, Pittsburgh, PA 15261
45. G. D. Duffy, Air Conditioning News, P.O. Box 2600, Troy, MI 48007
46. Richard English, Research Division, Carrier Corporation, Carrier Parkway, P.O. Box 4808, Syracuse, NY 13221
47. V. A. Eustace, IRD Co. Ltd., Fossway, Newcastle upon Tyne, Great Britain
48. J. N. Eustis, Department of Energy, Office of Industrial Programs, CE-121.1, 1000 Independence Avenue, S.W., Washington, DC 20585
49. Bernard D. Ferrao, Resource Engineer, Pacific Gas & Electric Company, 245 Market Street, Room 1330, San Francisco, CA 94106
50. R. J. Fiskum, Energy Conversion Equipment Branch, CE-113.2, Department of Energy, 1000 Independence Avenue S.W., Washington, DC 20585
51. P. V. Gilli, Graz University of Technology, Kopernikusgasse 24, A-8010, Graz, Austria
52. Victor Goldschmidt, Ray W. Herrick Laboratories, Purdue University, W. Lafayette, IN 47907
53. Peter Gorike, Abt. Anwendungstechnik, Rheinish-Westfakuscges, Krupstrasse 5, 4300 Essen 1, Federal Republic of Germany
54. D. E. Grether, International Environmental Corp., P.O. Box 25608, 5000 S.W. 7th Street, Oklahoma City, OK 73125
55. James E. Griffith, Principal Engineer - Research, PSE&G Research Corporation, Research & Testing Laboratory, 200 Boyden Avenue, Maplewood, NJ 07040
56. G. C. Groff, Director, Research Division, Carrier Corporation, Carrier Parkway, Syracuse, NY 13201
57. Marvin Gunn, Energy Conversion & Utilization Technology Div., CS-142, Forrestal Building, Department of Energy, Washington, DC 20585
58. James Harnish, Chief Engineer, Advanced Products, Unitary Products Engineering, York Div., Borg-Warner Corp., P.O. Box 1592, York, PA 17405
59. D. T. Harrje, CEES, Engineering Quad, Princeton University, Princeton, NJ 08544
60. Floyd Hayes, Thermal Systems, The Trane Company, 3600 Pammell Creek Road, LaCrosse, WI 54601
61. Robert Holtz, Program Manager, Closed Cycle Systems, Argonne National Laboratory, 9700 S. Cass Avenue, Argonne, IL 60439
62. William M. Hughs, Development Engineer, Lone Star Gas Company, 301 South Harwood Street, Dallas, TX 75201
63. H. Jaster, General Electric Corporate Research & Development, General Electric Company, P.O. Box 43, Schenectady, NY 12345
64. Ted Kapus, Building Equipment Division, CE 112, Room GF-217, Department of Energy, 1000 Independence Avenue, S.W., Washington, DC 20585
65. Herbert Kaufman, ESEERCO, 1271 Avenue of the Americas, New York, NY 10020

66. George Kelly, Building Environment Division, IAT, National Bureau of Standards, Building 226, Room B122, Washington, DC 20234
67. R. W. King, Manager, Product Evaluation, Copeland Corporation, Sydney, OH 45365
68. P. Kuppers, KFA Julich, PLE, Postfach 1913, D-5170 Julich 1, Federal Republic of Germany
69. D. C. Lim, Energy Conversion Equipment Branch, CE-113.2, Department of Energy, 1000 Independence Avenue S.W., Washington, DC 20585
70. George Long, Director of Research, Northern Illinois Gas Company, P.O. Box 190, Aurora, IL 60507
71. Nancy Lovvorn, Alabama Power Company, P.O. Box 2641, Birmingham, AL 35291
72. R. A. Macriss, Associate Director, Energy Conservation Research, Institute of Gas Technology, 3424 South State Street, Chicago, IL 60616
73. J. C. Major, Swiss Federal Institut for Reactor Research, CH-5303 Wurenlingen, Switzerland
74. Martin McCall, Consumers' Gas, 1 First Canadian Place, P.O. Box 90, Toronto, Ontario M5X, 1C5, Canada
75. J. P. Millhone, Office of Buildings Energy Research & Development, CE-11, Department of Energy, 1000 Independence Avenue S.W., Washington, DC 20585
76. Eugene C. Moran, Director of Research, Washington Gas Light Co., Springfield Operations Center, 6801 Industrial Road, Springfield, VA 22151
77. F. H. Morse, Office of Solar Heat Technologies, CE-31, Department of Energy, 1000 Independence Avenue S.W., Washington, DC 20585
78. W. E. Murphy, Department of Mechanical Engineering, Texas A&M University, College Station, TX 77843
79. R. W. Newell, Vice President, Research & Development, Rheem Manufacturing Co., 5600 Old Greenwood Road, P.O. Box 6444, Fort Smith, AR 72906
80. Eric Nimke, Brooklyn Union Gas Company, 195 Montague Street, Brooklyn, NY 11201
81. Joe Pietsch, ARCO Comfort Products Co., 302 Nichols Drive, Hutchins, TX 75141
82. V. Recchi, National Research Council, % O. T. B. Zona Industriale, Contrada del Parco, Bari, Italy
83. Edward A. Reid, Jr., Manager, Utilization Research, Columbia Gas System Service, 1600 Dublin Road, P.O. Box 2318, Columbus, OH 43215
84. Hal Rhea, Vice President - Research & Development, Lennox Industries, Inc., P.O. Box 877, 1600 Metro Drive, Carrollton, TX 75006
85. Bill Riley, Advance Development, Heil Quaker Corporation, 647 Thompson Lane, P.O. Box 40566, Nashville, TN 37204
86. J. Rizzuto, New York State Energy Research & Development Auth., Agency Building No. 2, Empire State Plaza, Albany, NY 12223
87. Arthur Rosenfeld, Lawrence Berkeley Laboratory, Building 90, Room 3058, 1 Cyclotron Road, University of California, Berkeley, CA 94720
88. J. H. Rothenburg, Utilities Systems, Dept. of Housing & Urban

Dev., 451 Seventh Street S.W., Washington, DC 20410

89. William Rudoy, University of Pittsburgh, 323 Benedum Engineering Hall, Pittsburgh, PA 15261
90. J. D. Ryan, Energy Conversion Equipment Branch, CE-113.2, Department of Energy, 1000 Independence Avenue S.W., Washington, DC 20585
91. James Schulze, Senior Engineer, General Electric Company, Appliance Park, Building 1, Room 210, Louisville, KY 40225
92. John Schuster, Gas Research Institute, 8600 West Byrn Mawr Avenue, Chicago, IL 60631
93. Charles Sepsy, Ohio State University, Dept. of Mechanical Eng., Room 2075 - Robinson Lab, 206 West 18th Avenue, Columbus, OH 43210
94. James D. Shaw, Public Service Company of Oklahoma, P.O. Box 201, Tulsa, OK 74102
95. Samuel Shelton, School of Mechanical Engineering, Georgia Institute of Technology, Atlanta, GA 30332
96. J. A. Smith, Department of Energy, 1000 Independence Avenue S.W., CE-113.2, Washington, DC 20585
97. Mason Somerville, Professor, Dept. of Mech. Eng., University of Arkansas, Fayetteville, AR 72701
98. F. Steimle, Angewandte Thermodynamik & Kimatechnik, Fachbereich 13, Universitatsstr. 15, 4300 Essen 1, West Germany
99. Don Stephenson, National Research Council, Division of Buildings Res., Montreal Road, Ottawa, Canada KIA 0R6
100. Paul Swenson, Consolidated Natural Gas Service Company, 11001 Cedar Avenue, Cleveland, OH 44106
101. C. J. Swet, 7040 Woodville Road, Mt. Airy, MD 21771
102. W. D. Syniuta, Advanced Mechanical Technology Inc., 141 California Street, Newton, MA 02158
103. W. H. Thielbahr, Energy Conservation Branch, Department of Energy, Idaho Operations Office, 550 Second Street, Idaho Falls, ID 83401
104. R. M. Thompson, Vice-President, Engineering, BDP Company, Div. of Carrier Corporation, 7310 W. Morris Street, Indianapolis IN 46231
105. E. L. Tramel, Chief, Cons. & Energy Mgmt. Branch, 350 - 401 Building, Chattanooga, TN 37401
106. Michael Wahlig, Lawrence Berkeley Laboratory, Building 90, Room 2024, 1 Cyclotron Road, University of California, Berkeley, CA 94720
107. Donald Walukas, ORFMA, 795 Oak Ridge Turnpike, Oak Ridge, TN 37830
108. Lawrence Woodworth, Brookhaven National Laboratory, Building 475, Upton, NY 11973
109. Leslie R. Wright, Manager, Gas Research Institute, 8600 West Byrn Mawr Avenue, Chicago, IL 60631
110. P. Zegers, Commission of the European Communities, 200 Rue de la Loi, Brussels 1049, Belgium
111. Congressional Information Service, Research Building 83, Kodak Park, Rochester, NY 14050
112. Edison Electric Institute, 8th Floor, 1111 19th Street N.W., Washington, DC 20036

113. Institute for Energy Analysis, ORAU-Library
114. Office of the Assistant Manager for Energy R&D, U.S. Department of Energy, Oak Ridge Operations, Oak Ridge, TN 37830
115-142. Technical Information Center, Department of Energy, P.O. Box 62, Oak Ridge, TN 37830