Estimated Fuel Savings for Heat Pump Systems That* Combine Ejectors and Engine-Driven Compressors

R. W. MURPHY
Energy Division
Oak Ridge National Laboratory
Oak Ridge, Tennessee 37831

ABSTRACT

An existing ejector heat pump model was modified and combined with generic internal combustion engine and compressor models to assess the potential for ejectors driven by engine reject heat to reduce the fuel consumption of heat pumps driven by internal combustion engines. Under the model assumptions for nominal cooling mode conditions, a parallel arrangement of the ejector with the engine-driven compressor decreased heat pump system fuel consumption by 11% from the baseline engine-only case. For an ejector downstream in a series arrangement with the engine-driven compressor, the calculated fuel savings was 8% from the baseline. If assumed enhanced ejectors were employed in these situations, calculated fuel usage reductions were 19% and 17%, respectively.

NOMENCLATURE

C	coefficient of performance
f	engine energy fraction
L	lower heating value
Q	cooling load
R	engine energy stream fraction
w	mass flow

Subscripts

e	ejector
f	fuel
i	engine/compressor
j	jacket
r	refrigeration cycle
s	system
x	exhaust

INTRODUCTION

As used here, the term "ejector" refers to a device that uses a high-pressure (primary) fluid stream to compress a low-pressure (secondary) fluid stream by (a) accelerating the primary stream, (b) entraining and accelerating the secondary stream, and (c) decelerating the combined primary and secondary streams. When employed in a heat pump system such as that illustrated in Fig. 1, the ejector essentially replaces other types of compressors used in more conventional systems. The energy required to accomplish the compression in the ejector is provided by heat input to a pump-fed boiler on the primary fluid stream. The other components of the heat pump system (that is, evaporator, condenser, and expansion valve) remain essentially the same, with the possible exception of size variations, as those in conventional systems.

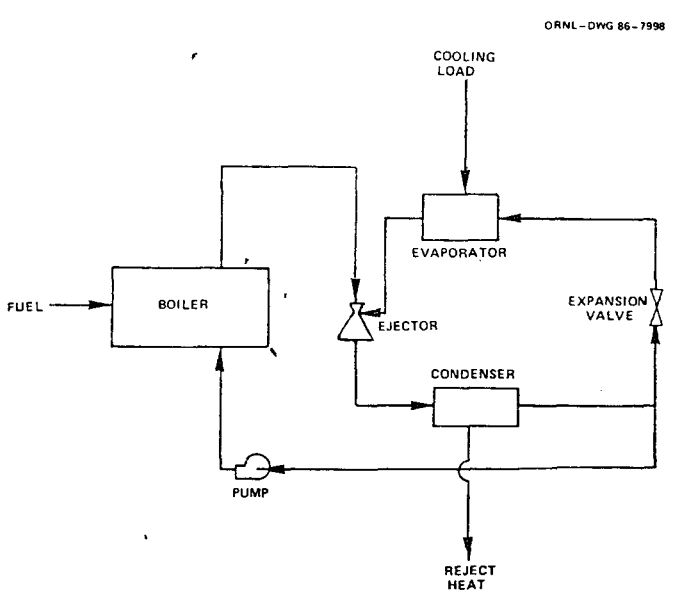

Fig. 1. Ejector heat pump.

Such devices have long been employed in industrial heat pumping applications where the availability of service steam from central fired boilers made it the fluid of choice.

In a previous study, Hsu [1] used an analysis developed by Elrod [2] and thermodynamic property equations for fluorocarbons developed by Downing [3] to estimate performance for ejector heat pumps operating with Refrigerants 11, 113, and 114. For Refrigerant 11 with boiler, condenser, and evaporator temperatures at 200°F (93.3°C), 110°F (43.3°C), and 50°F (10.0°C), respectively, calculated coefficients of performance were 0.3 for the cooling mode (C_e) and 1.3 for the heating mode.

Although the performance calculated by Hsu was not especially impressive when compared with other heat-actuated heat pump options, the traditional advantages claimed for ejectors (low capital investment, low maintenance costs, and high reliability) are considerable. In a situation where relatively low-temperature "waste" heat is available, a combined or hybrid system may be attractive, particularly if ejector performance can be enhanced to levels substantially above model estimates. Based on simple internal combustion engine, compressor, and ejector component models, this paper examines the performance potential of selected hybrid systems and ejector enhancement levels and makes comparisons with the associated baseline system.

SYSTEM SELECTION

As the base for the hybrid systems considered here, a combustion-engine-driven vapor-compression heat pump with given cooling capacity was selected as shown schematically in Fig. 2. As candidate hybrid systems to provide the given cooling capacity, both parallel and series configurations of the ejector with the engine-driven compressor were evaluated (see Table 1). In the

ORNL-DWG 86-8003

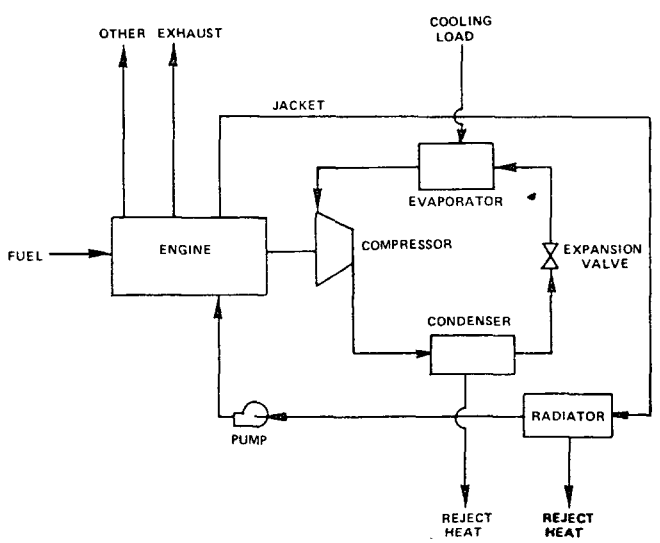

Fig. 2. Internal combustion engine-driven heat pump.

parallel arrangement illustrated in Fig. 3, the engine-driven compressor and the ejector work across the entire pressure difference between the condenser and the evaporator, with the ejector entraining and compressing (as a secondary stream) part of the evaporator refrigerant mass flow and thereby reducing the refrigerant mass flow through the compressor, the power required by the

Table 1. System configurations

System	Configuration
1	Baseline engine-driven
2	Hybrid with parallel ejector
3	Hybrid with series ejector downstream
4	Hybrid with enhanced parallel ejector
5	Hybrid with enhanced series ejector downstream

ORNL-DWG 86-7999

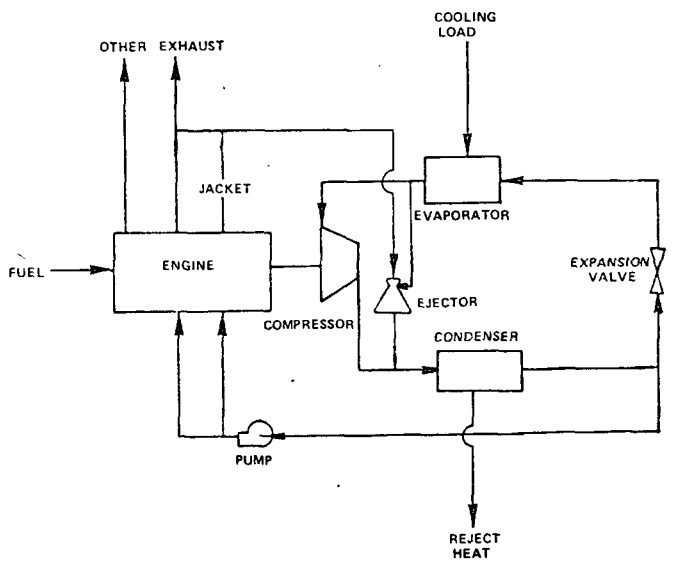

Fig. 3. Combined internal combustion engine-driven and ejector heat pump (parallel arrangement).

compressor, and the fuel usage by the engine. In the series arrangement with ejector downstream (illustrated in Fig. 4), both the compressor and the ejector handle the full refrigerant mass flow from the evaporator, but the ejector reduces the compressor power requirement and fuel usage by providing part of the pressure rise required to bring the refrigerant from the evaporator pressure to the condenser pressure.

MODELING

A generic internal combustion engine model by Segaser [4] was combined with a generic heat pump model (fixed efficiency compressor) to establish fuel usage and coefficients of performance. Brake thermal efficiency (f_i), jacket heat fraction (f_j), and exhaust heat fraction (f_x) values were based on the lower heating value of the fuel and were taken to be those for a liquid-cooled, naturally aspirated, spark-ignition gas engine operating at 75% of rated load (see Table 2). The compressor was assumed to have a fixed efficiency of 45.5%, which, for the baseline case of Refrigerant 11 operation with a 50°F (10.0°C) evaporator and 110°F (43.3°C) condenser, gives a refrigeration cycle coefficient of performance (C_r) of 3.50.

All heat transfer processes were modeled as isobaric. The refrigerant vapor leaving the evaporator and the refrigerant liquid leaving the condenser were assumed to

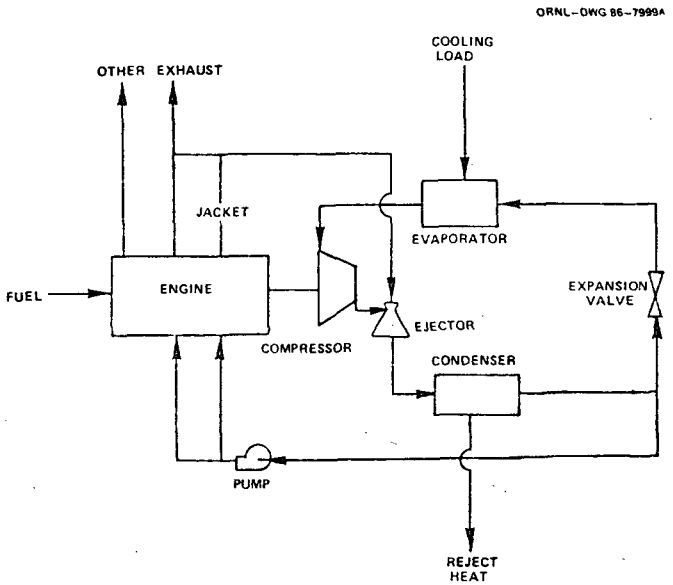

Fig. 4. Combined internal combustion engine-driven and ejector heat pump (series arrangement with ejector downstream).

Table 2. **Generic engine characteristics at 75% of rated load (energy flows based on fuel lower heating value)**

Brake thermal efficiency	30.7%
Jacket coolant heat rejection	27.8%
Exhaust gas heat rejection	26.7%
Lube oil heat rejection	5.3%
Radiation and other losses	9.5%
	100.9%

be saturated at the evaporator and condenser temperatures, respectively. The refrigerant expansion process was assumed to be isenthalpic.

Heat to drive the primary ejector stream was derived from only the engine jacket and engine exhaust. It was assumed that 100% of the former (R_j) and 50% of the latter (R_x) could be recovered by heat transfer from the jacket and exhaust to boil refrigerant in the pumped system feeding the ejector primary nozzle. Consistent with the earlier work by Hsu, primary nozzle efficiency for the ejector was assumed to be 97% and diffuser efficiency to be 75%. Based on the assumption of improved device design, an enhanced ejector was modeled as providing twice the ejector heat pump cooling coefficient of performance determined by the Hsu model for the given exit pressure and inlet temperatures and pressures. Heat pump cycle conditions were set at the Hsu baseline values as indicated in Table 3.

SOLUTION METHODS

As defined here, fuel consumption (w_f) and system cooling coefficient of performance (C_s) are inversely related figures of merit for a fixed cooling load (Q) and fixed fuel lower heating value (L_f) according to the relation

$$C_s = \frac{Q}{w_f L_f} .$$

Table 3. **Heat pump cycle conditions**

Working fluid	Refrigerant 11
Evaporator saturation temp.	50°F (10.0°C)
pressure	8.78 psia (60.55 kPa)
Condenser saturation temp.	110°F (43.3°C)
pressure	102.52 psia (706.85 kPa)
Boiler saturation temp.	200°F (93.3°C)
pressure	27.89 psia (192.29 kPa)

For the parallel arrangement of Fig. 3, the exit pressure and inlet temperatures and pressures to the compressor and ejector are fixed such that the engine-driven compressor and ejector models can be solved separately for the required operating points. Therefore, the total cooling load to be accommodated must be composed of the individual cooling loads (Q_i and Q_e) associated with each component operating separately between these fixed conditions, that is,

$$Q = Q_i + Q_e ,$$

where

$$Q_i = f_i w_f L_f C_r$$

and

$$Q_e = (R_j f_j + R_x f_x)\, w_f L_f C_e .$$

The resulting hybrid system cooling coefficient of performance is given by

$$Q_s = f_i C_r + (R_j f_j + R_x f_x)\, C_e .$$

For the series arrangement of Fig. 4, an iterative solution is required because the compressor exit/ejector secondary inlet condition is not known a priori. The calculation sequence employed was as follows:

(1) Assume a value for the exit pressure of the compressor.

(2) Combine with the given compressor inlet evaporator exit conditions and the compressor model to calculate the compressor exit state.

(3) Employing this state as the inlet state for the ejector secondary stream, the given primary stream inlet (boiler exit) conditions, and the given condenser pressure, use the ejector model to determine the ejector exit conditions and mass flow (entrainment) ratio.

(4) Using the state properties and mass flow ratio, determine the power required by the compressor.

(5) Using the state properties and engine model, calculate the shaft power available to the compressor.

(6) If the power required exceeds the power available, reduce the assumed compressor exit pressure and thereby reduce the compressor enthalpy rise and power requirement while reducing the ejector entrainment ratio and increasing the rejected heat and power available from the engine.

(7) Continue the iteration until convergence is achieved.

RESULTS

All performance results are referenced to the baseline engine-driven configuration denoted in Table 1 as System 1. For the generic engine characterized in Table 2 and the heat pump cycle conditions specified in Table 3, System 1 had a cooling coefficient of performance of 1.074. For convenience, the engine fuel consumption for this case was assigned a value of 10.00 (lower heating value) energy units, establishing a cooling load of 10.74 energy units to be accommodated by all the competing hybrid systems. Of necessity, the compressor of System 1 must encounter both the full mass flow from the evaporator and the full pressure difference between the evaporator and the condenser.

As shown in Table 4, the parallel ejector arrangement of System 2 uses the "waste" heat from the engine to drive an ejector which compresses 11% of the required evaporator mass flow. The net effect is to reduce the compressor power requirement and engine fuel consumption by 11% and to increase the system cooling coefficient of performance to 1.20.

Table 4. Performance calculations for selected systems

System	Compressor mass flow as percent of evaporator mass flow	Compressor pressure difference as percent of total	Cooling coefficient of performance	Relative engine fuel consumption
1	100	100	1.07	10.00
2	89	100	1.20	8.94
3	100	89	1.16	9.24
4	79	100	1.33	8.10
5	100	74	1.29	8.29

System 3, employing the series ejector arrangement, uses the recovered engine heat to accomplish the last 11% of the required pressure rise. Making somewhat less effective use of the ejector, this configuration achieves a system cooling coefficient of performance of 1.16 by reducing the compressor power requirement and engine fuel consumption by 8%.

Incorporation of an enhanced ejector into the parallel arrangement (System 4) increases the portion of the evaporator mass flow handled by the ejector to 21%, reduces the compressor power and fuel consumption to 81% of the System 1 value, and increases the system cooling coefficient of performance to 1.33.

If such an enhanced ejector were implemented in the parallel configuration (System 5), the ejector could provide 26% of the pressure rise, requiring 83% of the System 1 compressor power and fuel consumption and providing a system cooling coefficient of performance of 1.29.

CONCLUSIONS

For the stated conditions, the models predict that the performance of a heat pump driven by an internal combustion engine can be substantially improved when an ejector driven by engine reject heat is combined in various hybrid configurations. Projected reductions in fuel consumption ranged from 8 to 11% under baseline ejector assumptions and from 17 to 19% for the enhanced ejector situation. Corresponding increases in system coefficients of performance apply. Within the study constraints, configurations employing an ejector in parallel with the engine-driven compressor gave calculated system performance superior to that for those using a series arrangement.

REFERENCES

1. Hsu, C. T., Investigation of an Ejector Heat Pump by Analytical Methods, ORNL/CON-144, Oak Ridge National Laboratory, July 1984.

2. Elrod, H. G., Jr., "The Theory of Ejectors," J. of Appl. Mech., Trans. ASME, A170-A174, Sept. 1945.

3. Downing, R. C., "Refrigerant Equations," ASHRAE Trans. 80(2), 158-169, 1974.

4. Segaser, C. L., Internal Combustion Piston Engines, ANL/CES/TE 77-1, Oak Ridge National Laboratory, July 1977.