October 1992 • NREL/TP-254-4147

Desiccant Cooling: State-of-the-Art Assessment

Ahmad A. Pesaran
Terry R. Penney
Al W. Czanderna

National Renewable Energy Laboratory
A Division of Midwest Research Institute
Operated for the U.S. Department of Energy
Under Contract No. DE-AC02-83CH10093

NREL/TP-254-4147 • UC Category: 231 • DE93000013

Desiccant Cooling: State-of-the-Art Assessment

Ahmad A. Pesaran
Terry R. Penney
Al W. Czanderna

National Renewable Energy Laboratory
(formerly the Solar Energy Research Institute)
1617 Cole Boulevard
Golden, Colorado 80401-3393
A Division of Midwest Research Institute
Operated for the U.S. Department of Energy
under Contract No. DE-AC02-83CH10093

October 1992

NOTICE

NOTICE: This report was prepared as an account of work sponsored by an agency of the United States government. Neither the United States government nor any agency thereof, nor any of their employees, makes any warranty, express or implied, or assumes any legal liability or responsibility for the accuracy, completeness, or usefulness of any information, apparatus, product, or process disclosed, or represents that its use would not infringe privately owned rights. Reference herein to any specific commercial product, process, or service by trade name, trademark, manufacturer, or otherwise does not necessarily constitute or imply its endorsement, recommendation, or favoring by the United States government or any agency thereof. The views and opinions of authors expressed herein do not necessarily state or reflect those of the United States government or any agency thereof.

Printed in the United States of America
Available from:
National Technical Information Service
U.S. Department of Commerce
5285 Port Royal Road
Springfield, VA 22161

Price: Microfiche A01
Printed Copy A11

Codes are used for pricing all publications. The code is determined by the number of pages in the publication. Information pertaining to the pricing codes can be found in the current issue of the following publications which are generally available in most libraries: *Energy Research Abstracts (ERA)*; *Government Reports Announcements and Index (GRA and I)*; *Scientific and Technical Abstract Reports (STAR)*; and publication NTIS-PR-360 available from NTIS at the above address.

Preface

Desiccant cooling and dehumidification have received much attention as viable alternatives for the air conditioning of buildings. Over the last 15 years, technological advances have occurred through national and international research, development, and demonstration efforts. Despite these advances, the technology has not achieved widespread acceptance and mass-market penetration. The objectives of this document are to present an overview of the work accomplished to date on desiccant cooling to provide assessment of the state-of-the-art of desiccant cooling technology in the field of desiccant materials, dehumidifier components, desiccant systems, and models. The report also discusses the factors that affect the widespread acceptance of desiccant cooling technology.

This report is organized as follows. First, a basic description and historical overview of desiccant cooling technology is provided. Then, the recent research and development (R&D) program history (focusing on DOE's funded efforts) is summarized. The status of the technology elements (materials, components, systems) is discussed in detail, and a preliminary study on the energy impact of desiccant technology is presented. R&D needs for advancing the technology in the market are identified. The National Renewable Energy Laboratory's (NREL's) unique desiccant test facilities and their typical outputs are described briefly. Finally, the results of a comprehensive literature search on desiccant cooling are presented in a bibliography. The bibliography contains approximately 900 citations on desiccant cooling. The desiccant cooling citations are available on floppy disks as a computerized data base.

This work was funded by the Building Technologies Office of the U.S. Department of Energy (DOE). The authors would like to thank J. Ryan, R. Hassett, and E. Kweller of DOE's Office of Building Technology and R. Anderson of NREL's Buildings Energy Technology Program for their support and feedback during preparation of this document.

A. A. Pesaran

A. A. Pesaran, Leader
Desiccant Cooling and Dehumidification Task

Approved for the National Renewable Energy Laboratory:

T. R. Penney, Manager
Thermal Sciences and Engineering Branch

R. S. Anderson, Manager
Building Energy Technology Program

L. M. Murphy, Director
Industrial and Building Technology Division

Table of Contents

	Page
Preface	iii
Acronyms and Abbreviations	xi
Executive Summary	xiii
1.0 Introduction	1
1.1 State of the U.S. Heating, Ventilation, and Air Conditioning Market: Trends and Opportunities for Desiccant-Based Cooling	1
1.2 Background	2
2.0 Historical Overview and Recent R&D History	7
2.1 Historical Overview	7
2.1.1 Open-cycle desiccant cooling cycles	7
2.1.2 Closed-cycle desiccant cooling cycles	11
2.1.3 Integrated or hybrid desiccant cooling cycles	11
2.2 Recent R&D History	12
2.2.1 United States research and development	12
2.2.2 International research and development	15
2.3 Summary	16
3.0 Desiccant Materials: Status of Science and Technology	17
3.1 Background and Fundamental Understanding of Water/Solid Interactions	17
3.2 Advanced Desiccant Materials	18
3.2.1 Purpose of ADMs research	21
3.2.2 Relationship of desiccant materials to desiccant cooling systems	21
3.2.3 Polymers as ADMs	22
3.3 Other Materials Research Activities	24
3.4 Desiccant Degradation	25
3.5 Summary	26
4.0 Desiccant Components: Status of Science and Technology	27
4.1 Introduction	27
4.2 Commercial Dehumidifiers	29
4.3 Prototype Dehumidifiers	29
4.4 Summary	31
5.0 Systems: Status of Technology	33
5.1 Open-Cycle Solid Desiccant Cooling Systems	33
5.2 Closed-Cycle Solid Desiccant Cooling Systems	40
5.3 Open-Cycle Liquid Desiccant Cooling Systems	40

Table of Contents (Concluded)

Page

5.4 Hybrid and Integrated Desiccant Cooling Systems 46
5.5 Summary 57

6.0 Models 59

6.1 Solid Desiccant Components and Systems 60
6.1.1 Detailed models for desiccant dehumidifiers 60
6.1.2 Simplified models for desiccant dehumidifiers 61
6.1.3 Other component models 62
6.1.4 Systems models 63
6.2 Liquid Desiccant Components and Systems 64
6.2.1 Absorber 64
6.2.2 Collector/regenerator 65
6.2.3 Systems 65
6.3 Summary 65

7.0 Desiccant Cooling Potential: Energy Impact 67

7.1 Introduction 67
7.2 Energy Impact 68
7.3 Summary 68

8.0 Research and Development Needs 71

8.1 Scope 71
8.2 Research and Development Needs 72
8.2.1 Desiccant materials 72
8.2.2 Components 72
8.2.3 Systems 73
8.3 Summary 73

Appendix A DOE/NREL Investments in Desiccant Test Equipment/Procedures 75

A.1 NREL Desiccant Cooling Test Facilities: Full Spectrum Relationships 75
A.1.1 Quartz Crystal Microbalance (QCM) 77
A.1.2 Sorption Test Facility (STF) 79
A.1.3 Heat- and Mass-Transfer Test Facility (HMTF) 80
A.1.4 HVAC Equipment Test Facility (HVACTF) 82
A.1.5 Desiccant Contamination Test Facility (DCTF) 86

Appendix B External Distribution List 91

Bibliography 95
Introduction 95
Search Strategy and Results 95
Description of Data Bases 96
Acknowledgments 97
Desiccant Cooling Bibliography 99
Absorption Cooling Bibliography 165

List of Figures

		Page
Figure 1-1	Distribution of floor area in commercial U.S. building stock	2
Figure 1-2	Vapor compression refrigeration cycle	3
Figure 1-3	Absorption cooling cycle	4
Figure 1-4	Various types of desiccant cooling systems and their elements discussed in this document	5
Figure 2-1	Schematic and psychometric chart for Pennington's cycle	8
Figure 2-2	Past and present U.S. organizations contributing to desiccant cooling and dehumidification research and development	13
Figure 3-1	Comparison of PSSASS and silica gel isotherms with Type 1 moderate, Type 2 linear, Type 3 moderate, and linear isotherms	20
Figure 3-2	Moisture capacity loss of several desiccants because of thermal cycling and exposure to cigarette smoke under worst-case conditions for an estimated 10 years	26
Figure 4-1	Impact of heat- and mass-transfer parameters on dehumidifier effectiveness	28
Figure 4-2	Ratio of heat-transfer rate to pressure drop for various dehumidifier passage geometries	28
Figure 5-1	Schematic of a desiccant cooling ventilation cycle	34
Figure 5-2	Schematic of a desiccant cooling recirculation cycle	35
Figure 5-3	Diagram of Illinois Institute of Technology cooled desiccant cycle	36
Figure 5-4	SENS cycle	38
Figure 5-5	REVERS cycle	39
Figure 5-6	DINC cycle	39
Figure 5-7	Schematic of a closed-cycle zeolite heat pump	41
Figure 5-8	Condenser/evaporator used in the zeolite heat pump	42
Figure 5-9	Example of a liquid desiccant cooling system	43
Figure 5-10	Liquid desiccant cooling system proposed by Griffiths	44
Figure 5-11	Thin-film, open-flow collector proposed by Robison	45

List of Figures (Concluded)

Page

Figure 5-12 Psychometric representation of a) vapor compression, b) adiabatic desiccant dehumidifier, and c) hybrid system cooling processes 47

Figure 5-13 Desiccant cooling system used in a supermarket 48

Figure 5-14 Hybrid liquid desiccant system used in a hospital 50

Figure 5-15 Hybrid system for small general office buildings 51

Figure 5-16 Schematic of the humidity pump 52

Figure 5-17 Residential dehumidifier using aqueous lithium chloride 54

Figure 5-18 DESRAD system operating modes 56

Figure 6-1 Model level hierarchy for desiccant cooling analysis 59

Figure A-1 NREL desiccant cooling test facilities 76

Figure A-2 Block diagram showing the principal components of the NREL quartz crystal microbalance apparatus 78

Figure A-3 Typical results of the quartz crystal microbalance apparatus, adsorption/desorption for polystyrene sulfonic acid sodium salt with various molecular weights at 22.1°C 78

Figure A-4 Schematic of the NREL desiccant sorption test facility 80

Figure A-5 Typical results of the sorption test facility, adsorption/desorption equilibrium capacity of several desiccants at 30°C 81

Figure A-6 Schematic of the NREL desiccant heat- and mass-transfer test facility 81

Figure A-7 Typical results of the heat- and mass-transfer test facility, transient response of the microbead silica-gel/parallel-plate test matrix 83

Figure A-8 Schematic of the NREL HVAC equipment test facility (formerly desiccant cyclic test facility) 84

Figure A-9 Typical results from the HVAC test facility, outlet conditions for the process airstream from a microbead silica-gel/parallel-passage dehumidifier as a function of rotational speed 85

Figure A-10 Schematic of the NREL desiccant contamination test facility 87

Figure A-11 Typical results from desiccant contamination test facility. Moisture capacity of virgin and exposed silica gel samples at 30.5°C 89

List of Tables

		Page
Table 2-1	Desiccant Cooling R&D Areas of Active U.S. Organizations	14
Table 5-1	Desiccant Cooling Cycle COP Values at ARI Standard Conditions	37
Table 7-1	Estimated Desiccant Cooling Annual Energy Impact	69
Table A-1	Results of Analysis of Transient Response Curves for Three Matrices Tested in the Heat-and Mass-Transfer Test Facility	83

Acronyms and Abbreviations

ε	Effectiveness
A/C	Air Conditioner
ADM	Advanced Desiccant Materials Research
ADOC	Adiabatic Desiccant Open Cooling
ARI	Air Conditioning and Refrigeration Institute
ASHRAE	American Society of Heating, Refrigeration and Air Conditioning Engineers
CFC	Chlorofluorocarbons
cfm	cubic feet per minute
COP, electric	Cooling output/electric energy input
COP, thermal	Cooling output/thermal energy input
COP	Coefficient of Performance
DCS	Desiccant Cooling System
DOE	U.S. Department of Energy
GRI	Gas Research Institute
HVAC	Heating, Ventilation, and Air Conditioning
Le	Lewis Number
MOSHMX	Method of Solving Heat and Mass Transfer
NREL	National Renewable Energy Laboratory
NTU	Number of Transfer Units

Executive Summary

Why Desiccant Cooling?

In 1990 about 3.9 quads of primary energy were used for air conditioning (cooling and ventilation) of buildings. The energy used for air conditioning buildings is expected to rise in the 1990s and beyond as the population shifts to the warmer southern states and personal computer use increases in office buildings. In the 1990s, the air conditioning industry is faced with several challenges: increased energy efficiencies, improved indoor air quality, growing concern for improved comfort and environmental control, increased ventilation requirements, reduction of chlorofluorocarbons (CFCs), and rising peak demand charges. New approaches to space conditioning will be required to resolve these economic, environmental, and regulatory issues. Desiccant cooling and dehumidification, a technology known for some time, may provide important advantages in solving air conditioning problems.

How Do Desiccant Cooling Systems Work?

In a typical desiccant system, the moisture (latent load) in the process air is removed by a desiccant material in a dehumidifier, then the temperature (sensible load) of the dried process air is reduced to the desired comfort conditions by sensible coolers (e.g., heat exchangers, evaporative coolers, cooling coils). The latent and sensible loads are handled separately and more efficiently in components designed to remove that load. The desiccant in the dehumidifier is regenerated (reactivated) by application of heat to release the moisture, which is exhausted to the outdoors. The heat for regeneration can be provided from a number of energy sources such as solar, waste heat, natural gas, and off-peak electricity. The desiccant can be either solid or liquid. In solid desiccant systems, air is passed through a bed of adsorptive material. Air is dried and moisture is adsorbed by the desiccant. When the desiccant is saturated, hot air is passed through the bed, releasing the moisture. Typically, the desiccant is loaded into a disc that rotates between the process and regeneration airstreams. In a liquid desiccant system, a concentrated liquid desiccant is sprayed in a contactor (containing cooling coils or packing materials) to absorb moisture from humid air stream passing through the contactor. The liquid desiccant leaving the contactor is diluted with removed water. The diluted liquid desiccant is heated or sprayed into the regeneration air stream to remove and release the moisture and reconcentrate the liquid desiccant.

The Major Advantages

- Desiccant systems offer significant potential for energy savings (0.1-0.4 quads) and reduced consumption of fossil fuels. The electrical energy consumption is small, and the source of thermal energy can be diverse (i.e., solar, waste heat, natural gas).

- With desiccant systems the use of CFCs is eliminated (if used in conjunction with evaporative coolers) or reduced (if integrated with vapor compression units). CFCs contribute to depletion of earth's ozone layer and will be banned by the end of the century.

- Indoor air quality is improved because of higher ventilation and fresh air rates associated with desiccant systems. Such systems also offer lower humidity levels and the capability to remove airborne pollutants.

- With desiccant systems, air humidity and temperature are controlled separately, enabling better control of humidity.

Potential Annual Energy Savings of Desiccant Cooling Technology (Quads)

	$COP_e = 2$						$COP_e = 3$					
	Residential			**Commercial**			**Residential**			**Commercial**		
Market penetration	30%			20%			30%			20%		
Primary energy saved by not using conventional cooling system (Quads)	0.518			0.448			0.518			0.448		
Primary electrical energy needed for running DCS (Quads)	0.080			0.070			0.120			0.103		
	COP_t 1.0	COP_t 1.4	COP_t 1.8	COP_t 1.0	COP_t 1.4	COP_t 1.8	COP_t 1.0	COP_t 1.4	COP_t 1.8	COP_t 1.0	COP_t 1.4	COP_t 1.8
Primary thermal energy for DCS regeneration (Quads)	0.311	0.222	0.173	0.269	0.192	0.149	0.407	0.334	0.257	0.403	0.288	0.224
Total primary energy for DCS (Quads)	0.391	0.302	0.253	0.339	0.262	0.219	0.587	0.454	0.379	0.506	0.391	0.327
Total saved energy for replacing conventional system by DCS (Quads)	**0.127**	**0.216**	**0.265**	**0.109**	**0.186**	**0.229**	**-0.069**	**0.064**	**0.139**	**-0.058**	**0.057**	**0.121**

Notes:

DCS: desiccant cooling system
COP_e: electrical COP for the conventional cooling system
COP_t: thermal COP for DCS
Quad: 10^{15} Btu

Applications

The best circumstances for use of desiccant cooling and dehumidification technology are: need for humidity control, economic benefits from using low humidity, high latent load versus sensible load, low thermal energy cost versus high electric energy cost, and need for dry cooling coils and duct work to avoid microbial growth.

Desiccant cooling and dehumidification can be applied to many types of buildings: supermarkets, hotels and motels, office buildings, hospitals and nursing homes, restaurants, health clubs and swimming pools, and residences. The success of desiccant cooling is being realized in supermarkets, which use four times more energy per unit floor space than most commercial buildings. Use of desiccant technology to provide dry, cool air for hotels and motels in humid climates (to avoid mold and mildew damage as a result of excess moisture) is expected to be the next major application of the technology.

Status of Technology

More than 15 years of research and development, funded by the Department of Energy, Gas Research Institute, utilities, and the private sector, have resulted in significant improvements in the performance, cost, and reliability of desiccant dehumidification and cooling systems. Currently, they are competitive in the market for a few specialized applications such as in supermarkets. Investigation of desiccant cooling systems during past decades have revealed that such systems have great potential to compete with and complement the conventional, electrically driven vapor compression systems. There are approximately 900 citations in the literature on the subject of desiccant cooling. The following are some of the recent advances and findings for desiccant cooling technology.

Materials

- Type 1 M (moderate) isotherm has been identified as the "preferred" shape of isotherm for solid desiccants in cooling applications. The higher performance from a desiccant with a Type 1M isotherm is usually obtained when staged regeneration is used.

- Several Type 1 M desiccants have been identified/synthesized, and R&D efforts are underway to incorporate these materials into inexpensive dehumidifier structures.

- Desiccant materials have the potential to remove airborne pollutants, thereby improving indoor air quality.

- Desiccant degradation/contamination is not expected to be a barrier/problem for HVAC application of solid desiccant cooling technology.

Components

- Rotary dehumidifiers with laminar flow passages (e.g., corrugated, honey comb, or parallel plate) have become the choice for solid desiccant cooling systems.

- Low-pressure-drop, relatively inexpensive, laminar-flow, corrugated dehumidifiers using silica gel or molecular sieves have been entered into the market.

- Low-cost solid desiccant dehumidifiers using Type 1 M material are being manufactured by a few organizations.

- A "humidity pump" gas-fired liquid desiccant dehumidifier module has been developed that can be added to the electrically driven refrigeration air conditioner for removing latent load.

Systems

- The concept of "staged regeneration" for solid desiccant dehumidifiers has been reintroduced. Combined with Type 1 M desiccant and high regeneration temperatures, staged regeneration is expected to reduce the size of air-to-air heat exchangers, thus reducing system size and cost.

- Advanced desiccant cycles have been proposed that have thermal COPs above 1.7. Higher COPs are achieved through use of a larger number of components.

- A gas-fired prototype closed-cycle desiccant heat pump unit has been developed using Zeolite/water with a cooling COP above 1.2.

- A variety of modeling tools for analyzing the performance of desiccant cooling systems and components have been developed and validated.

- Integrated desiccant cooling systems using desiccants for dehumidification and conventional vapor compression for cooling have been successfully demonstrated for a few commercial buildings and many supermarkets.

Future Research and Development Needs

While significant progress has been made in efficiency and cost effectiveness of desiccant cooling systems for air conditioning, commercial systems and designs are available only for special applications such as supermarkets and other low-humidity applications. Lowering costs and improvements in the efficiency, size, reliability, and life-expectancy of components and systems are necessary to advance penetration of the desiccant cooling technology into broader commercial air conditioning market.

The results of the last 15 years of R&D and the goal of mass market penetration have given desiccant cooling technology a direction for the future and shaped R&D needs. In our opinion, the high priority R&D areas are:

Materials

- Development of low-cost solid desiccant materials with optimum properties for high-, medium-, and low-temperature regeneration applications

- Fundamental research on water/vapor desiccant interaction for improving sorption behavior

- Development of low-cost noncorrosive, low-vapor pressure, and safe liquid desiccants with desirable sorption properties

- Study of desiccants as air purifiers for improving indoor air quality.

Components

- Developing low-cost, high-performance, compact solid and liquid dehumidifiers
- Reducing the cost and energy requirements for desiccant regeneration device
- Development of control strategies and components.

Systems

- Demonstration of the state-of-the-art desiccant systems for air conditioning of various buildings
- Conducting system performance and economic analysis studies
- Development of efficient, cost-effective systems utilizing waste heat for desiccant regeneration
- Development of user-friendly design and analysis tools
- Transfer of technology to consultant engineers, building community, and HVAC designers and manufacturers.

Concluding Remarks

Desiccant cooling technology has the potential to significantly affect the air conditioning market and its energy use. Desiccant cooling has many benefits including lower energy consumption, using renewable energy or waste heat, lower use of CFCs, and improved indoor air quality. Advances in the last decade have resulted in successful application of the technology in niche markets. However, penetration into the air conditioning mass market requires further improvement in efficiency and reliability, reduction in size and cost, and improvement in technology acceptance by the building community. Investments in further research and development in materials, components, and systems are needed and justified considering the potential of the desiccant cooling technology.

1.0 Introduction

1.1 State of the U.S. Heating, Ventilation, and Air Conditioning Market: Trends and Opportunities for Desiccant-Based Cooling

In 1990, the United States used approximately 29.3 quads of primary energy in residential and commercial buildings at a cost of $170 billion. Of this energy consumption, about 13% (3.9 quads) was used for air conditioning (cooling and ventilation) of buildings. Over the last several years the use of energy for space air conditioning has risen, and it will continue to rise in the 1990s and beyond because of population shifting to warmer southern states and also increased usage of personal computers in office buildings. (Source: *Analysis and Technology Transfer Report 1989 and 1990: Building Technologies*, 1991, Report BNL 46559, Brookhaven National Laboratory, Upton, NY.)

Faced with indoor air quality and a growing concern for improved comfort and environmental control, increased ventilation requirements, reduction of CFCs (chlorofluorocarbons), increased efficiency standards, and rising peak demand charges, new approaches to space conditioning will be required.

The acceptance of a new space conditioning technology may occur for a number of reasons, but economic, environmental, or regulatory pressures for change are the primary drivers. There is growing evidence that desiccant cooling, a concept that has been known for some time, may gain such acceptance and become one of the important space conditioning technologies of the 1990s. Desiccant cooling technology may provide important advantages in solving these problems. For these reasons, a technology review and assessment is appropriate.

Small buildings (less than 50,000 ft^2) dominate the commercial building stock and represent about half the total commercial floor area in the U.S. market as shown in Figure 1-1. Under speculative development, the U.S. building industry tries to minimize initial cost. Heating, ventilation, and air conditioning (HVAC) system choices generally have favored applied unitary equipment, packaged rooftop units, and distributed heat pump systems, all suited for individual tenant metering.

The efficiency of the various types of cooling equipment has steadily risen over the last 10 to 15 years, largely in response to the pressures for increased efficiency stemming from the oil shocks of the 1970s and resultant federal and state minimum efficiency regulations. A new standard for energy-conserving design of new commercial buildings has been developed by the American Society of Heating, Refrigerating, and Air Conditioning Engineers (ASHRAE). This standard, ASHRAE 90.1-1989, forms the basis for a U.S. Department of Energy (DOE) standard that is mandatory for all federal buildings and proposes minimum efficiency requirements for HVAC equipment. These requirements introduce for the first time partial-load and full-load minimum efficiency levels. With the recent fluctuation in oil prices and uncertainty in the supply of imported oil, the pressures for higher equipment efficiency will continue.

For the air conditioning and refrigeration industry, there is also the new pressure for regulating production and eventually eliminating CFCs. To complicate matters, increased ventilation standards for all new buildings will, ostensibly, increase the overall building load, particularly the latent-to-sensible-heat ratio. The recently approved ASHRAE standard 62-1981R increases the minimum of outdoor air from 2.4 L/s (5 cfm) to 7.1 L/S (15 cfm) per person; this will provide a large incentive for developing equipment that can handle increased fresh-air loads.

Conservation measures and energy-efficient building designs are helping to reduce dependency on imported oil, but usage, especially in peak periods, has grown faster than the added capacity supplied by

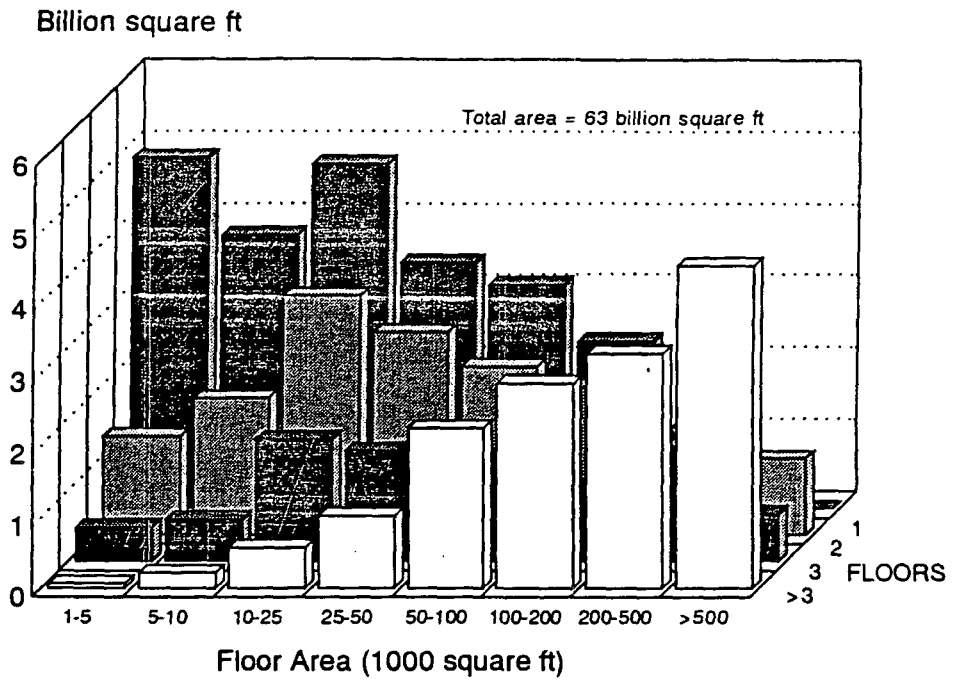

Figure 1-1. Distribution of floor area in commercial U.S. building stock (Source: Energy Information Administration, June 1991, *Commercial Buildings Characteristics 1989*, Report #DOE/EIA-0246(89), Department of Energy, Washington, DC.)

new utility plants. Therefore, utilities have introduced costly peak demand charges and significant financial incentives to help levelize their loads.

The trends discussed previously about the future of the air conditioning technology (release of CFCs), economy, energy prices, and concerns about the environment and health provide opportunities for desiccant-based air conditioning technology.

1.2 Background

Vapor compression refrigeration is the most common type of cooling and dehumidification system in use today. Absorption refrigeration is the second most common air conditioning system. Both systems rely on cooling by evaporating a liquid refrigerant into vapor in a closed loop, condensing it back to liquid, and removing the heat from the space and rejecting it into the atmosphere.

In *vapor compression refrigeration* (Figure 1-2), the refrigerant is maintained in a closed system consisting of a liquid reservoir, an expander, an evaporator, a compressor, and a condenser. The process is as follows: liquid at high pressure in the reservoir is allowed to expand into the lower pressure evaporator, and is transformed into its vapor phase. In so doing, it consumes or absorbs heat from the surroundings, usually the space or substance being cooled. The vapor then proceeds to the compressor where its pressure is increased. It is then fed to the condenser where it returns to its liquid state and accumulates in the reservoir. In this transformation, the liquid rejects heat to the surroundings of the condenser. The major power consumer is the compressor, which usually uses electricity. Ancillary fans, blowers, or pumps are required to move fluids being cooled or heated in the evaporator or condenser. The efficiency of a vapor

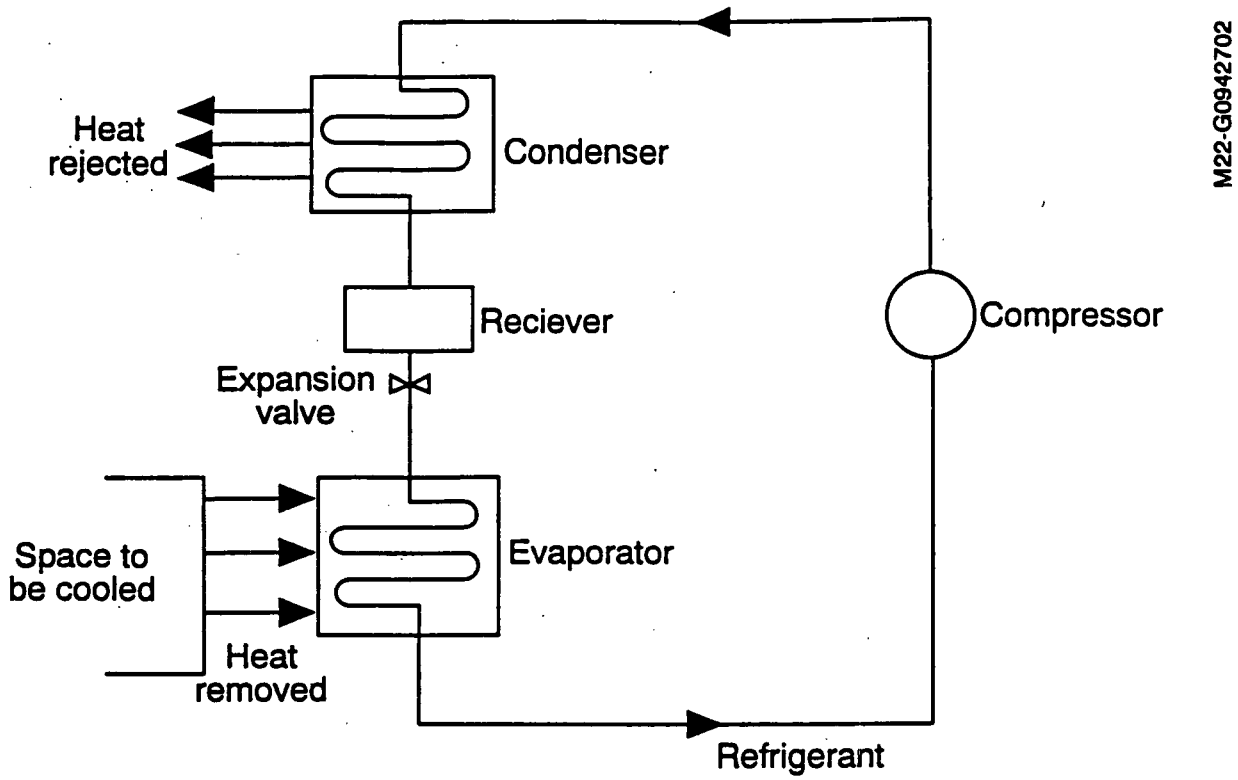

Figure 1-2. Vapor compression refrigeration cycle

compression system is defined in terms of electric coefficient of performance (COP), which is *cooling output* divided by *electric energy input.* Today, the electric COP of vapor compression machines is about 2-3.

In *absorption cooling* (Figure 1-3), the compression of the vapor is accomplished chemically. An absorption cycle provides cooling in the same way that vapor compression cycle does, i.e., evaporation of refrigerant in the evaporator. The difference is that the vapor compressor is replaced by an absorber/regenerator/pump in the absorption system. An absorption cycle uses the chemical affinity of an absorbent for a refrigerant (e.g., lithium bromide salt as the absorbent and water as the refrigerant) to maintain a vacuum at the evaporator (cooler) end of the chiller, and uses a source of heat to maintain a high pressure at the condenser (hot) end. This pressure difference allows the refrigerant to boil at a lower temperature than it condenses, so it moves heat from a cooler place to a warmer place, just like a vapor compression machine. The refrigerant vapor is absorbed in a secondary liquid, and its pressure is increased to condenser pressure by a liquid pump that consumes much less electrical energy than a vapor compressor. The mixture of absorbent and refrigerant flows to a generator where heat is added to separate the refrigerant from the absorbent. The refrigerant in vapor form flows into the condenser. The source of the heat added in the generator can be natural gas, waste heat, or solar energy. The efficiency of an absorption system is defined in terms of thermal COP, which is *cooling output* divided by *thermal energy input.* Today, the thermal COP of an absorption system is about 0.5 to 0.8. Advanced systems with projected COPs of up to 1.7 are under development. Absorption systems are mainly used where electricity costs and usage are too high.

An alternative to vapor compression and absorption cooling is desiccant cooling. Desiccant cooling is not a new technology. An excellent tutorial on psychometrics, methods of dehumidification, and many applications including typical success stories for desiccants are presented in a recent new publication, *The Dehumidification Handbook—Second Edition*, edited by L. Harriman for Munters Cargocaire (Harriman, 1990).[1] Moisture load calculations, typical desiccant dehumidifier performance, and system designs are all discussed with commercial and industrial examples. For those readers who are unfamiliar with the general type of desiccants and desiccant system options and operation, a review of this book is suggested.

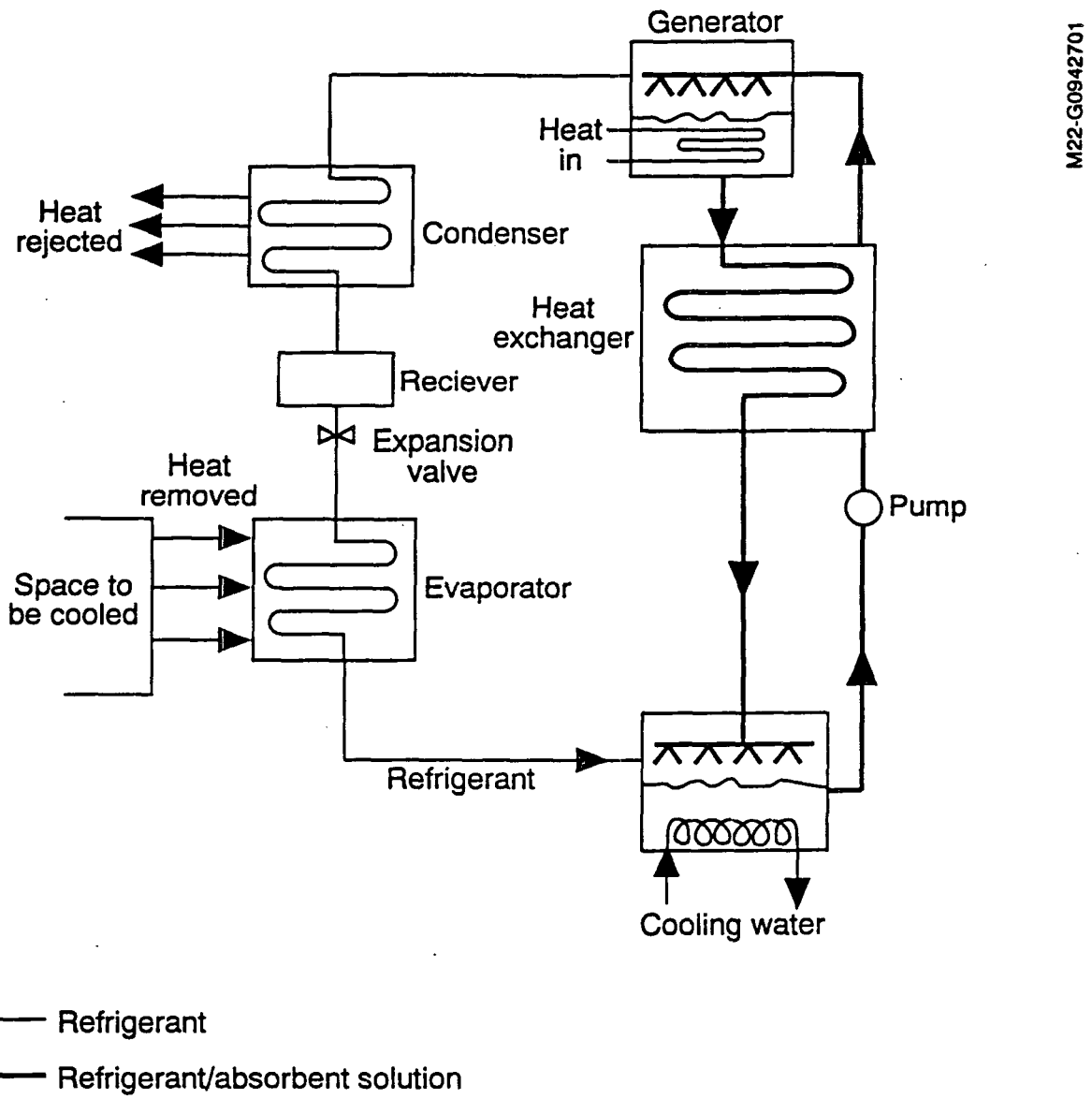

Figure 1-3. Absorption cooling cycle

[1] Almost all of the references are listed in the desiccant cooling bibliography. References not listed in the bibliography are provided as footnotes.

Gas Research Institute (GRI) has recently released a 20-minute video entitled "An Introduction to Commercial Desiccant Systems." This video shows, by example, desiccants being used successfully in a variety of applications. In a recent condensed but comprehensive article, various desiccant cooling cycles and recent national research and development efforts are described (Kini, Waugaman, and Kettleborough, 1990).

Further details about the basic theory of desiccant cooling and dehumidification, material, components, various types of systems, and applications are discussed in Sections 3, 4, 5, and 6. Figure 1-4 shows various types of desiccant cooling systems and their elements. An extensive bibliography that draws together a comprehensive listing of relevant work on the subject of desiccant cooling and dehumidification is presented at the end of this report.

In the next section, a brief historical overview of desiccant technology is presented with a focus on the progressive advances made or being pushed to achieve lower cost, higher performance, and CFC-free cooling.

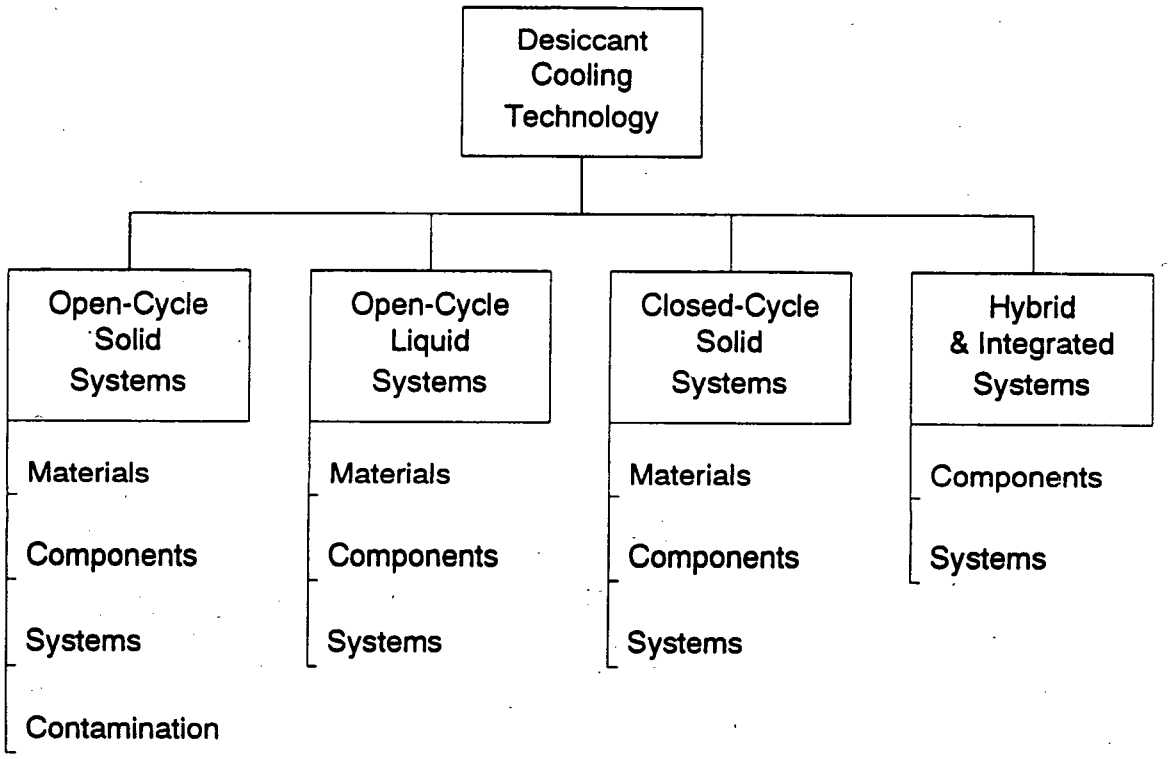

Figure 1-4. Various types of desiccant cooling systems and their elements discussed in this document

2.0 Historical Overview and Recent R&D History

2.1 Historical Overview

2.1.1 Open-cycle desiccant cooling cycles

The simple evaporative cooler is the oldest open-cycle cooling system. During the 1930s, it was developed to the form that is still widely marketed today (Watt, 1986)[2]. The small amount of energy it consumes for fans and pumps can be reduced considerably by applying modern knowledge of heat- and mass-transfer and fluid mechanics (Dunkle et al., 1980)[3]. Simple evaporative coolers only cool down to the wet bulb temperature, which limits their effective use to the hot, dry areas of the Southwest.

Indirect and regenerative evaporative coolers were developed as an improvement to the simple evaporative coolers of the 1930s (Watt, 1986)[2]. Later, however, these coolers did not compete economically with conventional vapor compression or simple evaporative coolers. The large size of the metal plate heat exchangers was an important disadvantage. More compact and economical heat exchangers for these coolers have been developed and marketed (Dunkel et al., 1980[3]; Pescod, 1980[4]) with further improvements possible (Maclaine-cross, 1983)[5]. Theoretically, indirect and regenerative evaporative coolers cool down close to wet bulb temperatures without providing excessively humid supply air, which gives them a broader climatic range than the simple evaporative coolers. This range does not extend to humid climates.

Pennington (1955) solved the problem of limited climatic range of evaporative cooling systems. He saturated a rotary heat exchanger matrix with a desiccant solution, making an adiabatic regenerative dehumidifier. He coupled this dehumidifier with a heat source to a double regenerative evaporative cooler (Figure 2-1). Pennington's cycle is now routinely referred to as the ventilation cycle. Pennington gave a sound description of the phenomena in a regenerative dehumidifier but did not give the performance of his prototype. He discovered that rotating the regenerative dehumidifier at a reasonably high speed would make it transfer the total heat or enthalpy to the incoming fresh airstream during winter heating.

It is interesting to note that the concept of desiccant cooling was first introduced by Hausen (1935). This concept used solid desiccants that were regenerated periodically to dehumidify moist air for air conditioning. Several inventors (Shipman, 1936; Fleisher, 1939; Larriva, 1941; and Altenkirch, 1941 and 1944) followed Hansen's idea of trying to develop commercial desiccant cooling devices. But these and other possible cycles were not developed during the following 30 years. The rotary silica gel dehumidifier was invented in 1933 by Miller and Fonda (1933). However, its potential use in cooling

---

[2]Watt, J.R., 1986, *Evaporative Air Conditioning Handbook*, 2nd edition, Chapman and Hall, New York, NY.

[3]Dunkle, R.V., P.J. Banks, and I.L. Maclaine-cross, 1980, "Wound Parallel Plate Exchangers for Air-Conditioning Applications," *Compact Heat Exchangers*, R.K. Shah et al., eds., ASME HTD Vol. 10, pp. 65-72.

[4]Pescod, D., 1980, "An Advance in Plate Heat Exchanger Geometry Giving Increased Heat Transfer," *Compact Heat Exchangers*, R.K. Shah et al., eds., ASME HTD Vol. 10, pp. 73-78.

[5]Maclaine-cross, I.L., 1983, "Optimizing Rotary Exchanger Matrices for Conditions Close to Ambient," ASME Paper 83-WA/HT-87, Boston, MA.

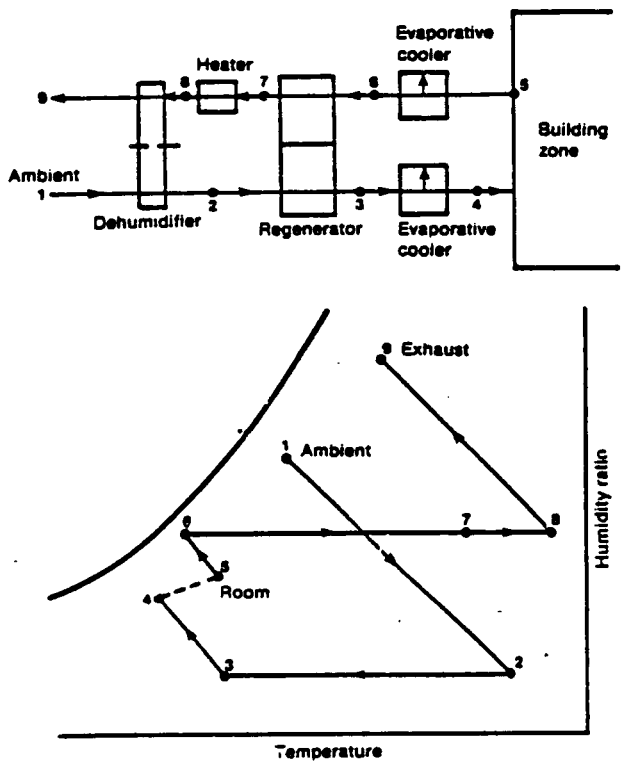

Figure 2-1. Schematic and psychometric chart for Pennington's cycle

cycles to reduce energy for air conditioning applications was not realized because of a lack of theoretical understanding.

Munters (1968) improved Pennington's regenerative dehumidifier by introducing parallel passages. Regenerative dehumidifiers for drying conditioned spaces are commercially available from a number of suppliers (e.g., ASHRAE Handbook, HVAC Systems and Equipment Volume, 1992). Total heat or enthalpy regenerators for building exhaust air to fresh air energy recovery are also available (e.g., ASHRAE Handbook, HVAC Systems and Equipment Volume, 1992).

The Institute of Gas Technology (IGT) recognized the potential of the ventilation, or Pennington, cycle for gas-fired air conditioning and built a number of prototypes in the 1960s (Rush and Macriss, 1969). Solar energy prototypes were built in the late 1970s by IGT (Macriss and Zawachi, 1982), AiResearch Manufacturing Company (Rousseau, 1982), and Exxon Research and Engineering Company (Husky et al., 1982). By 1981 thermal coefficients of performance (COP; ratio of cooling energy delivered to heat energy supplied) over 0.5 had been achieved experimentally at Air Conditioning Refrigeration Institute standard test conditions (indoor conditions of 26.7°C, and 0.0111 kg water/kg dry air; outdoor conditions of 35.0°C, and 0.0142 kg water/kg dry air).

The early IGT effort was hampered by the lack of a satisfactory analytical method for predicting the performance of regenerative dehumidifiers. The available methods (Bullock and Threlkeld, 1966) could only predict performance at rotational speeds so low that the whole matrix was in equilibrium with the entering airstream at the end of both dehumidification and regeneration periods. Over the last 20 years, there have been many analytical methods developed for understanding the performance of desiccant dehumidifiers and desiccant cooling systems. Among these are the *analogy theory* of Banks (1972), the *finite difference method* of Maclaine-cross (1974), the *pseudo-steady-state model* of Barrow (1982) for adiabatic dehumidifiers, and the finite difference method of Worek and Lavan (1982) for cross-cooled dehumidifiers. Collier (1988) developed a model based on the finite difference method of Maclaine-cross and pseudo-steady-state of Barrow that is currently being widely used by desiccant-cooling researchers. These models have helped desiccant-cooling investigators understand the factors and physical properties that can affect the performance of dehumidifiers and cooling systems. The models also allow researchers to understand new desiccant materials and cooling cycles.

Dunkle (1965), in response to a request from the Australian mining industry, had developed a proposal for an adiabatic desiccant open cooling (ADOC) cycle independently of Pennington (1955). Johnston (1967) used the results of tests on packed beds of silica gel beads to predict the performance of Dunkle's cycle. The predictions were disappointingly low, and Dunkle's group realized that the regenerative dehumidifier needed to be understood before ADOC cycles could be improved.

Banks, working in Dunkle's laboratory, initiated the development of a comprehensive theory of combined heat- and mass-transfer in regenerative dehumidifiers and related devices in 1967. He introduced combined potentials, analogous to temperature, and combined specific capacity ratios, analogous to specific heat ratios, in terms of which combined heat- and mass-transfer can be described (Banks, 1972). These quantities can be calculated from the vapor pressure isotherms, the specific heat of the matrix, and the thermodynamic properties of moist air. Maclaine-cross and Banks (1972) used combined potentials and specific capacity ratios in predicting the performance of the regenerative dehumidifier and enthalpy regenerator. This analogy theory makes the many phenomena of regenerative dehumidifiers understandable and has subsequently been simplified for rapid calculation by Jurinak (1982).

Clark et al. (1981) at UCLA designed and tested a thin adiabatic desiccant bed for solar cooling applications and found that packed bed configurations are not economical alternatives because of large pressure drop and poor thermal performance. Nelson et al. (1978) applied the analogy theory of regenerative dehumidifiers to predicting the performance of ADOC cycles. They proposed a regenerative dehumidifier with a matrix consisting of thin parallel plates of silica gel separated by uniform air passages. Their predicted performance was much better than previously measured for ADOC cycle performance.

Maclaine-cross (1974) included the effect of solid side resistance to moisture diffusion in the analogy theory and found good agreement with an accurate finite difference solution of the partial differential equations for silica gel. This finite difference algorithm was based on detailed numerical analysis and extrapolation to zero grid size using three carefully chosen grid sizes. His program, MOSHMX, has been widely used by subsequent investigators.

Jurinak and Mitchel (1984) used MOSHMX to study the effect of isotherm shape, maximum water content, heat of adsorption, regenerative matrix thermal capacitance, matrix moisture diffusivity, and adsorption hysteresis on dehumidifier performance. They found that the best performance was obtained with a Braunuer-Type 1 vapor pressure isotherm shape, characteristic of a microporous silica gel desiccant. They concluded that commercially available microporous silica gels were attractive materials for dehumidifier construction.

Jurinak (1982) also studied the effect of matrix properties on the ventilation cycle performance. Adding heat capacity to a desiccant regenerative dehumidifier matrix increases COP and, hence, reduces energy consumption slightly. However, it reduces cooling capacity greatly, which increases capital costs. Minimum life-cycle cost requires a minimum desiccant matrix heat capacity. Jurinak and Mitchell (1984) used MOSHMX to predict the optimum purge rate for a regenerative dehumidifier. For operating conditions typical of the ventilation cycle, the predicted benefit of purge was small.

Packed-bed dehumidifiers are inexpensive; however, their high-pressure drop and, thus, high parasitic power consumption make them unsuitable for air conditioning applications. More expensive dehumidifiers with laminar-flow passage designs that offer low-pressure drops and high heat- and mass-transfer rates have been used in desiccant cooling systems (Macriss and Zawachi, 1982; Lavan and Gidaspow, 1982; Biswas, Kim, and Mills, 1984; Schlepp and Barrow, 1984; Coellner, 1986; and Cargocaire, 1982).

Effective Lewis numbers measured on packed beds of silica gel spheres have been between 3 and 30, indicating excessive mass-transfer resistance (van Leersum and Close, 1982; Kutscher and Barlow, 1982). Mass-transfer resistance of silica gel has been investigated at UCLA (Pesaran and Mills, 1984). The Solar Energy Research Institute (SERI), now the National Renewable Energy Laboratory (NREL), fabricated and tested parallel plate matrices and dehumidifiers of desiccant-coated polyester films (Schlepp and Barlow, 1984; Bharathan et al., 1987) based on the UCLA dehumidifier concept (Kim et al., 1985). The smaller particle size used by NREL greatly reduced the mass transfer resistance, and the dehumidifier approximates the Nelson et al. (1978) proposal previously discussed.

A thermal COP of 1.1 was predicted at standard test conditions for ventilation cycles using this dehumidifier (Schlepp and Barlow, 1984). This could make a gas-fired ventilation cycle competitive in primary energy consumption with electric vapor compression (Jurinak et al., 1984; Booz-Allen and Hamilton, 1982). However, higher COP and reduced capital costs are necessary for a solar desiccant cooling system to compete with conventional alternatives.

Recent theoretical research into advanced ADOC cycles has shown the possibility of substantially higher thermal COPs. Maclaine-cross and Banks (1981)[6] proposed a regenerative evaporative cooler that minimized the temperature differences across which heat was transferred and the concentration differences across which moisture was transferred. The second law of thermodynamics would lead one to expect improved performance, and the predicted performance was substantially better than less thermodynamically ideal regenerative evaporative coolers. Lavan et al. (1982) calculated the thermal COP for a thermodynamically reversible ventilation cycle at standard ARI test conditions as 4.66. Maclaine-cross (1985) has proposed an ideal ADOC cycle (different than ventilation cycle) with ideal components requiring no thermal energy (i.e., infinite COP) at standard ARI test conditions. Note that thermal COP is defined as cooling-energy output divided by thermal-energy input.

In 1984 the American Solar King Company fabricated and marketed a rotary (lithium chloride) dehumidifier cooling system for residential applications. The system was originally designed to be regenerated with flat-plate solar collectors. Later it was converted to run on natural gas. Under the sponsorship of GRI, Tecogen Corporation (Cohen et al., 1989) has fabricated and tested prototype desiccant cooling systems for restaurant applications.

---

[6]Maclaine-cross, I.L., and P.J. Banks, 1981, "A General Theory of Wet Surface Heat Exchangers and its Application to Regenerative Evaporative Cooling," *J. Heat Transfer*, Vol. 103, pp. 579-585.

Collier et al. (1986) identified *desired* properties of a solid desiccant material (called Type 1M desiccant) that can yield optimum performance for desiccant cooling systems. Laroche Chemical, under the sponsorship of GRI, and NREL, under the sponsorship of DOE, are developing these materials for high and low regeneration temperatures, respectively. The concept of staged regeneration, originally proposed by Glav (1966), has been reintroduced for dehumidifier regeneration. Combined with Type 1M desiccant, staged regeneration can provide thermal COPs over 1.3 with high cooling capacities. Worek et al. (1991) showed that high performance for a ventilation cycle could be achieved by using Type 1M material regenerated at 165°C, with a staged regeneration fraction of 16%. The advantage of this design is that lower heat exchanger effectiveness (i.e., lower heat exchanger sizes) could be used with minimum loss in performance. Several advanced open-cycle cooling cycles that use a desiccant dehumidifier have been proposed that can have COPs greater than the COP of the ventilation cycle (Maclaine-cross, 1985; Waugaman and Kettleborough, 1987). These concepts will be discussed in detail later.

Similar to solid desiccants, liquid desiccant cooling dehumidification systems have been used for many years for industrial dehumidification applications such as dehydration of natural gas. Such systems are commercially available and use either lithium chloride solutions (e.g., Kathabar Systems, 1989) or triethylene glycol (e.g., Niagara Blower Company, 1989). These systems have also been used for dehumidification of institutional buildings and industrial processes. Kakabaev and Golaev (1971) were among the first to investigate the use of solar energy for regeneration of a liquid desiccant flowing over a slanted, blackened surface. Robinson (1982) tested a desiccant cooling system with well water for removing sensible heat and a calcium chloride-water mixture, regenerated in a solar collector, for removing latent heat. Wood et al. (1983) has investigated the concept of flowing liquid desiccant over the roof of a building for desiccant regeneration using solar energy. Recently, Tecogen Inc. and Kathabar Systems (Ryan et al., 1989) have developed and tested a residential gas-fired dehumidifier using lithium chloride solutions.

2.1.2 Closed-cycle desiccant cooling cycles

Closed-cycle cooling systems using solid adsorbent such as zeolite were initially based on daily cycles or intermittent operation (Guillemint et al., 1980). These systems had COPs smaller than unity. In the last 10 years, Tchernev and Emerson (1986) have been developing a heat pump based on the principle of a closed-cycle desiccant system. By adding a regenerative heat exchanger, Tchernev and Clinch (1989) have built and tested a prototype closed-cycle zeolite/water heat pump with cooling COP of above 1.2. Based on the prototype results, a 3-ton zeolite heat pump unit for residential and light commercial applications is expected to enter the market in the near future. This system has costs comparable to electric vapor compression machines. Numerical simulations have shown that regenerative closed-cycle adsorption cooling systems using zeolite/ water can achieve cooling COPs around 2. Some other investigators have used zeolite/ammonia or carbon/ ammonia as pairs for the adsorption process.

2.1.3 Integrated or hybrid desiccant cooling cycles

Vapor compression systems are efficient in sensible cooling, while desiccant dehumidifiers are efficient for removing latent load. Combining the two systems into a hybrid or integrated cycle with the condenser providing most of the regeneration heat gives substantial overall energy conservation. This concept has been proposed by many investigators (e.g., Meckler, 1986; Schlepp and Schultz, 1984; Sheridan and Mitchell, 1982; How et al., 1983). Meckler (1986, 1991) has designed and installed several air conditioning systems that integrate solid or liquid desiccant dehumidifiers with conventional vapor compression systems for air conditioning of commercial and institutional buildings. Integration of commercially available dehumidifiers for latent heat removal and conventional vapor compression systems for sensible heat removal for supermarket applications is economical today (Bowlen et al., 1988). Many

supermarkets have been equipped with the integrated desiccant vapor compression systems. In the last few years, hotel and motel operators have been looking into using integrated desiccant vapor compression systems for moisture control and air conditioning of rooms.

2.2 Recent R&D History

2.2.1 United States research and development

Many organizations have been working on various aspects of desiccant cooling and integrated HVAC options. Figure 2-2 provides a partial list of U.S. organizations that were and are contributing to the desiccant cooling and dehumidification R&D. These organizations range from universities, state and national research laboratories, manufacturers, private research laboratories, consulting firms, utilities, and private and federal agencies. The majority of R&D activities have been funded by DOE and GRI. The Electric Power Research Institute (EPRI), local utilities, private organizations, and state agencies have funded some R&D efforts.

DOE has been funding long-term, high-risk research and development efforts that would not be pursued by the private sector under normal incentives. DOE-funded projects have focused on developing high-performance, low-cost desiccants and other system component materials; researching fundamentals of heat- and mass-transfer phenomena in adsorbent and absorbent geometries; developing fundamental mathematical models for performance predictions of materials, components, and systems; researching contamination of desiccant materials; testing of materials, components, and systems under near-real conditions; and analyzing advanced desiccant cooling system concepts as a mechanism for quantifying the impact of materials and components progress. A conscious effort has been made to leave engineering development to the private sector, which is investing their own resources to commercialize the technology.

DOE has funded many organizations over the last 15 years. Among these organizations are NREL (formerly SERI), Argonne National Laboratory, Oak Ridge National Laboratory, University of Wisconsin–Madison, University of Texas, Texas A&M University, University of South Carolina, UCLA, Illinois Institute of Technology (IIT), Colorado State University, University of Arizona, University of Illinois–Chicago, Florida Solar Energy Center, and Lawrence Berkeley Laboratory. The results of some of these R&D efforts are discussed throughout this report.

GRI is conducting one of the larger gas-fired desiccant cooling research and development efforts. GRI's strategy (Kosar and Novosel, 1988; Novosel, 1991) for cooling systems is to develop cost-effective, gas-fired, and recovered-heat-driven adsorption and absorption equipment for a range of sizes and applications within the residential and commercial markets. GRI's desiccant dehumidification/cooling program includes both near- and mid-term projects. All hardware development projects currently involve HVAC manufacturers on a cost-shared basis. GRI believes that integrated dehumidification/chiller systems that separate latent and sensible load control show good potential for the near term, especially when cost-optimized systems are packaged using existing or readily modified technology. These systems are being developed first for supermarkets, which are an ideal early market application because of the high latent-sensible load ratio. The next near-term application of the technology is moisture control in hotels and motels. Later, the technology is expected be extended to the broader commercial market in the 20- to 100-ton size range.

GRI is also looking into the technical and economic feasibility of combining desiccant dehumidification with passive and other sensible cooling techniques for residential buildings. Advanced desiccant cooling technology, based on the early work by Exxon Corporation, is being developed for residential and light

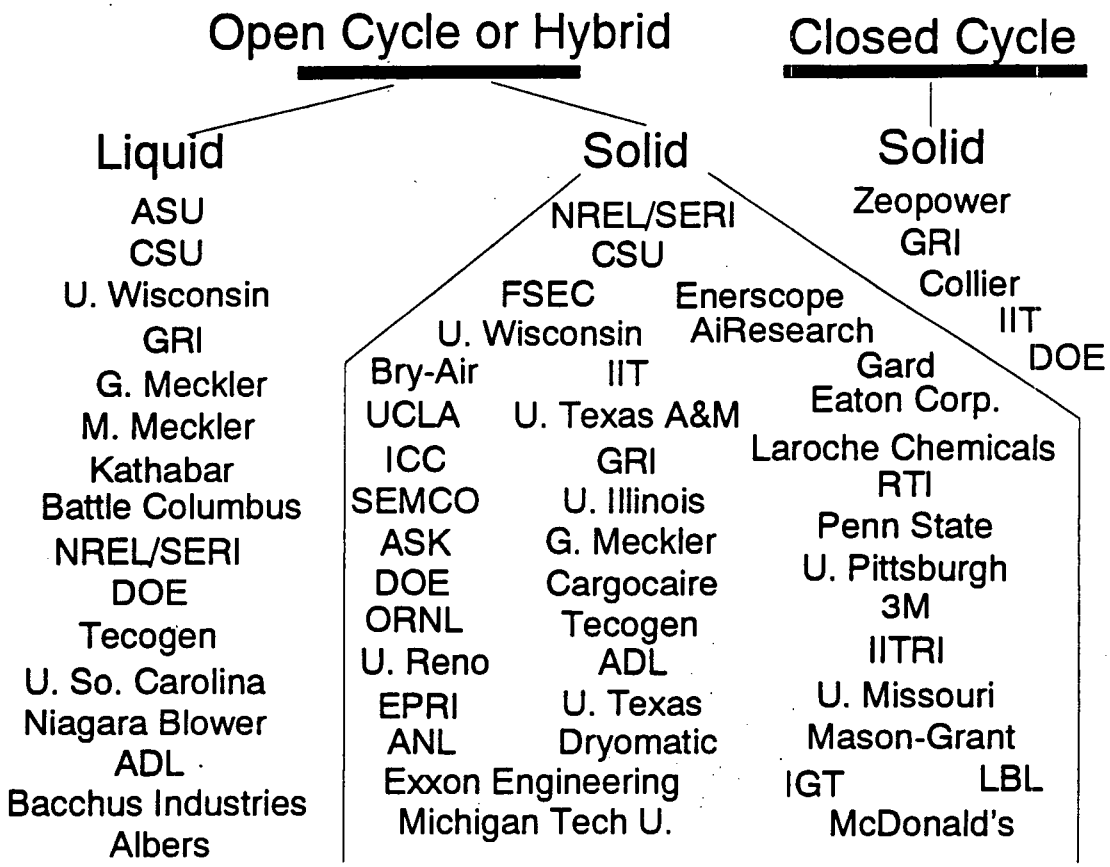

Figure 2-2. Past and present U.S. organizations contributing to desiccant cooling and dehumidification research and development

commercial applications in the 2- to 20-ton size range. Two parallel development projects are in place, each involving a major HVAC manufacturer, for designing and fabricating laboratory prototype units.

Aside from these larger hardware projects, GRI and its subcontractors are investigating the processes to manufacture desiccant materials with desired desiccant properties. These properties have been identified by GRI subcontracts (Collier et al., 1986; Collier, 1988) and a few organizations have been investigating fabrication of new materials. The co-sorption capabilities of desiccants to remove pollutants for improving indoor air quality have been investigated in a program jointly funded by GRI and ASHRAE (Hines et al., 1990). The details of some of GRI's work will be discussed in Sections 3 through 6.

EPRI has funded the University of Wisconsin–Madison to compare the use of desiccants for supermarket dehumidification with conventional, modified conventional, and ice storage electric-driven concepts. EPRI has been participating in desiccant workshops and technical conferences. Many local utilities such as California Edison Company, Tennessee Valley Authority, Georgia Power, and Florida Power and Light Company have supported projects related to desiccant cooling.

Manufacturers have also been developing new products. They have been working with GRI or DOE-funded organizations to develop more efficient, compact, reliable, and less costly dehumidification systems. These manufacturers include Cargocaire, Tecogen, Bry Air, Dryomatic, Kathabar, Niagara Blower, ICC Technologies, and American Solar King. Meckler Associates and Meckler Energy Group have been among the consulting firms involved in desiccant cooling R&D. Table 2-1 provides the

Table 2-1. Desiccant Cooling R&D Areas of Active U.S. Organizations

Organization	Material Synthesis	Material Testing	Material Modeling	Material Manufacturing	Dehumidifier Matrix Synthesis	Dehumidifier Matrix Testing	Dehumidifier Matrix Modeling	Prototype Dehumidifier Development	Dehumidifier Component Testing	Dehumidifier Component Modeling	Dehumidifier Manufacturing	Prototype System Packaging	System Testing (Lab)	System Testing (Field)	System Simulation or Modeling	System Manufacturing	System Packaging	Building Load Codes with Desiccant	Reliability/Degradation	Desiccants for Indoor Air Quality	Market Analysis	Technology Transfer
AIL Research, Inc.							L			L					L							L
Albers Air Conditioning					L	L	L	L	L	L	L	L	L	L		L					L	
American Solar King		S			S	S															S	
Arizona State University		L			L	L	L	L	L	L												L
Arthur D. Little					SL			SL			SL	SL		SL								SL
Bacchus Industries						L	L	L	L	L	L	L	L	L	L	L	L				L	
Battelle-Columbus Labs.									L	L		L	L	L	L							
Cargocaire Eng. Corp.	S	S	S		S	S	S	S	S	S	S	S	S	S	S	S	S		S		S	S
Colorado State Univ.		L			L	L	L		L	L			L									SL
Department of Energy	SL	SL	SL		SL	SL	SL	SL	SL	SL			SL	SL	SL			SL	S	S	S	SL
Eaton Corporation	S			S																		
Elec. Power Rsrch. Inst.	S									S					S							S
Enerscope			S				SL			SL					SL							
Florida Solar Engy. Ctr.		S				S									S			S				S
GARD										S					S			S				
Gas Research Institute	SL	SL	SL	SL	SL	SL	SL	SL	SL	SL	SL	SL	SL	SL	SL	SL	SL	SL	SL	SL	SL	SL
Georgia Inst. of Tech.							S			S					S							
G. Meckler & Associates												SL	SL	SL	SL		SL				SL	SL
ICC Technologies										S		S	S	S		S	S				S	S
IIT Research Institute										S			S							S		
Illinois Institute of Tech.	S	S	S		S	S	S			S			S		S							
Kathabar		L	L		L	L	L	L	L	L	L	L	L	L	L	L	L		L	L	L	
Laroche Chemicals	S	S	S	S	S																	
Mason-Grant																					SL	SL
Mcdonold's													S	S							S	
Michigan Tech. Univ.	S	S	S																			
M. Meckler Engy. Group										L			L	L	L						L	L
NREL	SL	SL	SL		SL	SL	SL	SL	SL	SL			SL		SL			S	S	S		SL
Oak Ridge National Lab.										S					S							S
Penn. State Univ.	S	S	S																			
Research Triangle Inst.	S	S	S																			
SEMCO					S	S	S	S	S	S	S	S	S	S	S	S	S					
Tecogen						SL	SL	SL	SL	SL		SL	SL	SL	SL	S	SL				SL	
3M	S	S	S	S																		
Univ. of Illinois-Chicago						S	SL			S					S							S
U. of Missouri-Columbia		S	S																	SL		SL
Univ. of Nevada-Reno										S					S							S
Univ. of Pittsburgh	S	S	S																			
Univ. of Texas A&M						L				SL					SL							SL
Univ. of Texas at Austin						L	L		L	L			L		L							L
U. of Wisconsin-Madison			SL				SL			SL		SL			SL			SL		S	SL	SL
Whirlpool					S	S		S	S		S										S	
Zeopower	S	S		S	S	S		S		S												

KEYS: S = Solid Capability; L = Liquid Capability; SL = Solid and Liquid Capability

research focus of some of the U.S. organizations currently contributing to desiccant cooling and dehumidification R&D.

2.2.2 International research and development

Internationally, there have been a number of research institutions and manufacturers that are or have been active in the R&D of desiccant cooling systems. It appears that Japan has the most extensive R&D program after the United States. Matsuki and Saito (1988) provide a comprehensive review of desiccant cooling R&D in Japan. Desiccant cooling activities of several countries are discussed in the final report of a workshop sponsored by the International Energy Agency (J.V. Anderson, editor, 1992, *Air Quality, Desiccant and Evaporative Cooling Systems*, final report on IEA Workshop, Orlando, FL, January 14-16, 1991, Swedish Council for Building Research, Stockholm, Sweden).

The following is a list of organizations outside of the United States that contribute to desiccant cooling R&D.

In Europe:

- Dokuz Eylul University, Izmir, Turkey
- Schiedel GmbH & Company, Munich, West Germany
- LIMSI Centre National de la Recherche Scientifique, Orsay, France
- Centre National de la Recherche Scientifique, Perpignan, France
- Tampere University of Technology, Tampere, Finland
- AB Carl Munters, Sollentuna, Sweden
- Delair BV, Netherlands
- CNR Institute for Transformation and Storage of Energy, Pistunina-Messina, Italy

It should be noted that most of the European activities are limited to basic research. The climate in most European countries is not too humid or too warm to require extensive R&D in desiccant cooling and dehumidification.

In Asia:

- National Sun Yat-Sen University, Kaohsiung, Taiwan
- Industrial Technology Research Institute, Chutung, Taiwan
- Sharp Corporation, Nara, Japan
- Seibu Giken Company, Ltd., Fukuokas-ken, Japan
- Government Industrial Research Institute, Nagoya, Japan
- Osaka Institute of Technology, Osaka, Japan
- Daikin Industries, Ltd., Osaka, Japan
- Nichias Corporation, Tokyo, Japan
- Department of Non-Conventional Energy Sources, Ministry of Energy, New Dehli, India
- Korean Gas Research Institute, Korea

Most of the activities in Taiwan are focused on product development. Japan has done both basic and applied research. Seibu Giken is a manufacturer of and silica gel and zeolite desiccant wheels. Daikin and Nichias are manufacturers of silica gel and lithium chloride wheels. Nichias also manufactures molecular sieve wheels. Sharp has developed a lithium chloride wheel and a prototype evaporative desiccant cooling system but is not currently active in this technology.

In Australia:

- University of South Wales, Kinsington
- Monash University, Monash
- Commonwealth Scientific and Industrial Research Organization (CSIRO), Clayton
- Rotary Heat Exchangers Pty, Ltd., Bayswater

The major contribution of Australian researchers has been the development of several methods for analyzing rotary dehumidifiers to better understand their performance. Current activities focus on gas engine desiccant hybrid air conditioning systems for commercial buildings.

2.3 Summary

Desiccant cooling and dehumidification is not a new technology. It has been under study since the mid-1930s. The use of liquid and solid desiccants for dehumidification purposes has grown into a $50 million industry. Most of the dehumidification applications have been for industrial and storage use such as process humidity control, corrosion and condensation protection, mold/fungus avoidance, moisture prevention, and product drying. Desiccants have also been used for dehumidifying and cooling commercial and institutional buildings. The use of desiccants for cooling applications did not receive much attention until the energy crisis of the 1970s. Because of interest in solar energy and potential for regenerating desiccants using solar heat, DOE funded R&D projects on solar desiccant cooling in the late 1970s. In the early 1980s, GRI started a comprehensive R&D program on gas-fired desiccant cooling and dehumidification systems as a gas cooling technology. Many research organizations (universities, national and local laboratories, and private firms) and manufacturers have been involved in these R&D activities. As a result of R&D efforts during the last 20 years, the thermal COP of open-cycle, desiccant cooling systems has doubled, and their first cost has been reduced significantly. A closed-cycle, desiccant cooling/heating system is being developed that may be competitive with electric heat pumps. Desiccant dehumidification devices integrated with conventional cooling systems have been used successfully in several commercial and institutional buildings and supermarkets. In addition to the United States, other countries in Europe, Asia, and the Pacific have been or are involved in desiccant cooling and dehumidification R&D. Japanese companies have apparently made the most progress in solid desiccant wheels and have the most extensive R&D program next to the United States. Ongoing R&D is expected to improve the performance of the components and systems, reduce costs, and improve reliability, making desiccant cooling and dehumidification technology competitive in the HVAC market early in the next century.

3.0 Desiccant Materials: Status of Science and Technology

3.1 Background and Fundamental Understanding of Water/Solid Interactions

A number of inorganic porous solids available have large internal surface areas and pore volume with an enormous affinity to sorb water. Some types of inorganic solids may sorb as much as 40% of their weight and remain physically dry (Gregg and Sing, 1982)[7], which is desirable for desiccant-cooling applications (Collier, Barlow, and Arnold, 1982). Some organic polymers may sorb over 50% of their weight (Bulygin et al., 1983[8]; Czanderna and Thomas, 1986). The uptake of water here is internal to the polymer, and as with many porous solids, the dynamics of the sorption process is diffusion controlled.

The sorption of water vapor, H_2O (v), by the desiccant is given by the reaction scheme:

$$D(s) + H_2O(v) \dashrightarrow D{\cdot}H_2O_{surface} \tag{3-1}$$

and

$$D(s) + D{\cdot}H_2O_{surface} \dashrightarrow D{\cdot}H_2O_{internal} + D(s) \tag{3-2}$$

where D(s) is a solid desiccant adsorption site. Water vapor adsorbs onto the surface (Equation 3-1) and permeates into the solid by several possible diffusion processes (Equation 3-2) to provide the total sorption. Empty surface sites are filled by further adsorption (Equation 3-1). Desorption of water vapor from the desiccant occurs by the reverse sequence:

$$D{\cdot}H_2O_{surface} \dashrightarrow D(s) + H_2O(v) \tag{3-3}$$

and

$$D{\cdot}H_2O_{internal} + D(s) \dashrightarrow D{\cdot}H_2O_{surface} + D(s) \tag{3-4}$$

where empty surface sites are generated (Equation 3-3) by desorption, and water sorbed in the material must first occupy a surface site (Equation 3-4) before desorption via Equation 3-3.

Although the details of the molecular processes are much more complex than illustrated by Equations 3-1 through 3-4, they illustrate that the sorption capacity is gained by at least two kinetic steps involving the rate of adsorption (Equation 3-1) and the rate of permeation into the solid (Equation 3-2). Equations 3-3 and 3-4 illustrate the reverse steps of desorption and diffusion. The adsorption and desorption rates are usually much faster than the permeation and diffusion rates. The permeation (diffusion) steps provide the solid-side resistance in the sorption-regeneration sequence, which can provide a fundamental understanding of these interactions and how they can be used for synthesizing or modifying materials to obtain the desired desiccant properties. The principal limitations to advancing desiccant cooling systems are related to finding a desiccant material with the required combination of isotherm shape, sorption capacity, sorption heat, sorption rates at the bed temperature, desorption rate at a minimally elevated temperature, cyclic stability of the sorption properties, and stability of the desiccant itself.

The forces primarily responsible for the sorption processes arise from interactions of the electric field at the surface of the solid (desiccant) with adsorbate molecules (water). Because of its large dipole moment and polarizability, the water molecule produces a heat of adsorption ranging from 10.8 to 20 kcal/mole.

---

[7] Gregg, S.J., and K.S.W. Sing, 1982, *Adsorption, Surface Area, and Porosity*, NY: Academic Press.

[8] Bulygin, A.N., Ye. L. Vinogradov, A. Ye. Luk'yanov, Ye. I. Mal'ko, and A.A. Tagger, 1983, "Study of the Structure of Polymeric Sorbents," *Polymer Sci., SSSR*, Vol. 25, No. 3, pp. 1179-1187.

The total interaction between the water molecules and the adsorbent surface contains contributions from several types of interactions, such as dipole-dipole, dipole-quadrupole, and dipole-induced dipole. Because water is a polar molecule and the sorption sites are primarily ionic, it appears conceivable that the electric field at the surface could be modified by introducing different inorganic ions or organic functional groups at the surface, changing the heat of adsorption. Modifications could be done by ion-exchange techniques on inorganic surfaces and during the preparation of organic materials. The modifications will influence the sorption capacity and isotherm shape, so the desired material must have the optimal combination of capacity and adsorbate-binding energy.

From sorption isotherms, the binding energy of the water adsorbate to the solid can be determined. The rate of diffusion through the porous material can be calculated, and, in principle, the rate of desorption from the solid can be determined and compared with experimental results. The comparison must be made using materials that at least approach the configurations used for the calculations. The sorption rate processes will be reduced by pore volume diffusion and intraparticle diffusion in a packed bed of particles. However, ideal geometries must be chosen and used for measurements designed to yield fundamental gas/solid interactions.

To understand the molecular processes for water/solid adsorbent desiccant systems, there is an obvious opportunity to combine the use of microbalances, temperature-programmed desorption, infrared, surface spectroscopies, and work function measurements to correlate rates and amount sorbed with the chemical bonds formed (related to heats of adsorption) and surface composition (effects of chemical modification). Furthermore, any changes in the amount sorbed and the rate of desorption should result in changes in the bonding at the surface (infrared). The results of using the modern surface science approaches of vibrational spectroscopies and compositional surface analysis should also be supplemented with the conventional measurements using microgravimetric, scanning electron microscopic, and pore volume analysis techniques. The most helpful understanding will be obtained using methods normally employed by surface chemists (Adamson, 1990)[9] rather than surface physicists.

The results of the fundamental studies will serve two major purposes. First, they will be used for guiding the synthesis of materials, which are designed to be optimal desiccants, and, second, they will provide valuable understanding of how surface interactions can limit or expand the opportunities of using desiccants to remove contaminants in the airstream (e.g., co-adsorption processes are simply limited or enhanced by the relative binding energy of the different gas [vapor] species).

3.2 Advanced Desiccant Materials

Based on the preceding section, the scientific objective of advanced desiccant materials (ADM) research is to understand how the materials modifications and surface phenomena influence the sorption properties so the desired performance can be predicted. As a natural extension of the fundamental research, the technological objective is to identify a next-generation, low-cost material with which solar radiation or heat from another low-cost energy source can be used for regenerating the water vapor sorption activity of the desiccant. This section provides background about desiccant materials, how they relate to desiccant cooling systems (DCS), those that have been used to date, and recent ADM research results. Of course, the solid desiccant in a DCS processes water vapor to remove the latent load.

[9] Adamson, A.W., 1990, *Physical Chemistry of Surfaces*, 5th ed. New York: Wiley. pp. 329-356 and pp. 609-614.

Commercial thermally regenerated DCSs must compete with vapor compression and all other space cooling technologies, so electrical and thermal coefficients of performance (COPs) and initial capital costs are primary concerns. From thermodynamic analyses of desiccant cooling cycles, it is apparent that the adsorption characteristics of the desiccant can have a large influence on the cooling capacity and COP of the cycle (Collier, Barlow, and Arnold, 1982; Jurinak, 1982). This effect was quantified in a computer parametric systems analysis study (Collier, Cale, and Lavan, 1986). Although this study assumed a regeneration temperature of 160°C, the conclusions about an "ideal" desiccant are also applicable for solar regeneration temperatures of 60° to 95°C. Collier concluded that if an "ideal" desiccant can be identified, the thermal COP of a DCS can be improved from 0.85-1.05, which can now be obtained with silica gel, to a minimum of 1.3-1.4 (with staged regeneration), which is closer to the theoretical maximum of about 4.66, identified by Lavan et al. (1982). (Ideal is in quotes because there are other properties of an ideal desiccant that were not included in his study. Isotherm shapes are discussed below and are important for desiccant technology.) At the same time, the cubic feet per minute (cfm) per ton for a ventilation cycle can be reduced from a range of 310 to 400 for silica gel to a range of 200 to 250 for an "ideal" desiccant. The reduction in cfm/ton must not be overlooked because this factor can reduce the physical size of commercial DCSs and keep electrical parasitic consumption low. If both these factors were achieved, DCSs could be cost competitive with other current air conditioning systems; this may not be possible for silica gel because silica gel isotherm shape is close to linear and not close to "ideal" shape (Collier, 1988). A similar analysis has not been carried out for liquid desiccants, which have equal opportunities. It should be noted that the concept of isotherm shape category has been introduced for desiccants and other absorbents in chemical literature for many years (e.g., Perry and Green, 1989)[10]. Investigators used these shapes to identify "favorable" or "unfavorable" isotherms and adsorbents for particular applications. Collier applied the concept of isotherm shape to predict the performance of desiccant cooling systems.

For the computer parametric analysis, Collier et al. (1986), and Collier (1988) chose five types of isotherms that are designated as Brunauer Type 1 extreme, Type 1 moderate, linear, Type 3 moderate, and Type 3 extreme. Type 1 isotherm is characterized by the constant separation factor equation:

$$W^* = W/W_{max} = RH^*/(S_f + RH^* - S_f \cdot RH^*) ,$$

where W^* = normalized desiccant water content
W = actual desiccant water content at RH^*
W_{max} = maximum desiccant water content at RH = 100%
RH^* = relative humidity corrected for temperature effects
S_f = separation factor

Note that for Type 1 moderate S_f is 0.1, and for linear isotherm S_f is 1. Values of S_f larger than 1 provide Type 3 isotherm shapes.

Figure 3-1 shows the Type 1 moderate; Brunauer, Emmet, and Teller (BET) Type 2; Type 3 moderate; and linear isotherms used for the study. The Type 1M (moderate) isotherm is the optimum shape for the "ideal" desiccant, and the sorption should follow this isotherm between 5% and 60% relative humidity (R.H.) for best results (Collier, 1988). The isotherm for a silica gel is also plotted, where the 37% water uptake at 100% R.H. is normalized to a loading fraction of 1.0, and part of the isotherm for PSSASS polymer, where the 40% water uptake at 60% R.H. is normalized to a loading fraction of 1.0. The silica gel isotherm shape is approximately linear and not close to a Type 1M isotherm shape—that is why

[10] Perry, R.H., and D. Green, 1989, *Chemical Engineers' Handbook*, 6th ed., McGraw Hill. New York, NY.

Collier (1988) did not consider it an "ideal" desiccant. No existing silica gel has a Type 1M isotherm shape. Chemical modification of silica gel may result in improved isotherm shape, but further R&D is needed. As is seen, PSSASS (polystyrene sulfonic acid sodium salt) is close to the Type 1 moderate isotherm shape as normalized, which is part of the reason why the modification of this polymer is emphasized.

At low R.H. of water vapor, the BET Type 2 isotherm has a knee that becomes more pronounced as the BET c value increases from 50 to 200 or more. Larger c values correspond to increasing interactions between the gas and the solid. With c values below 10 (weaker interactions), the isotherms become linear and then Type 3 (moderate and then extreme). Thus, an objective of modifying polymers with Type 2 behavior is to increase the water vapor/solid interactions to sharpen the knee to track the Type 1 moderate shape. Interactions that are too strong produce a Type 1 extreme isotherm, which has nearly all its uptake or loading at a low R.H. Desiccants with Type 1 extreme isotherms are more difficult to regenerate, which is why the Type 1 moderate isotherm is favored (Collier, Cale, and Lavan, 1986). Type 1 extreme isotherm represents a desiccant with stronger bonds between water molecules and the desiccant surface than those of Type 1 moderate. The difficulty of regeneration is referred to as a need for higher regeneration temperature and higher heat of desorption to break the strong physical bonding between adsorbed molecules (i.e., water) and adsorbent surfaces (i.e., desiccant).

Farooq and Ruthven (1991) have disputed the importance of the shape of isotherm on the performance of a desiccant cooling system. They suggested that the effect of isotherm shape on the moisture removal rate can be adequately compensated by appropriate adjustment of the cycle time between adsorption and regeneration. The benefits of type 1M isotherm can be realized when staged regeneration is used (Worek et al., 1991).

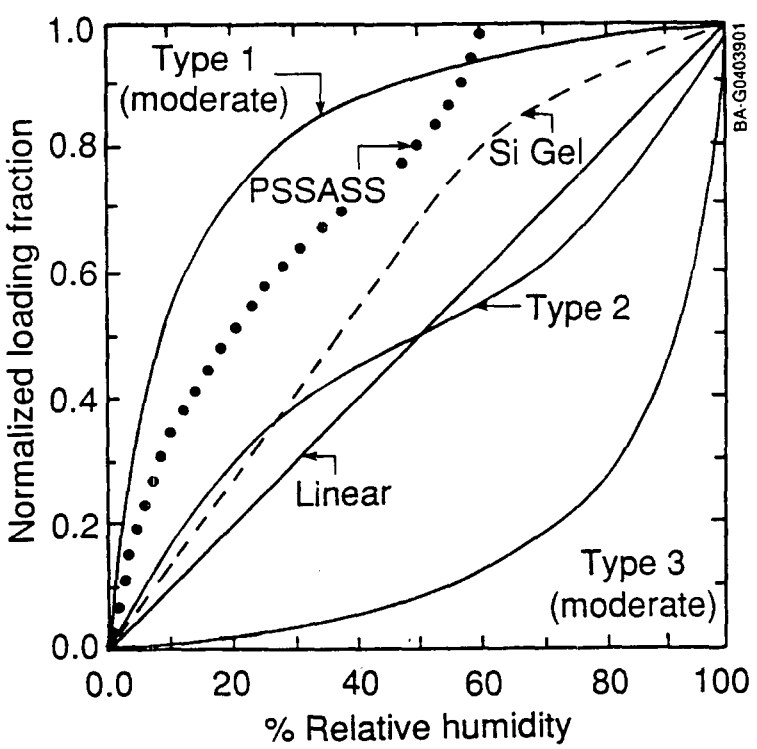

Figure 3-1. Comparison of PSSASS and silica gel isotherms with Type 1 moderate, Type 2 linear, Type 3 moderate, and linear isotherms

3.2.1 Purpose of ADMs research

One purpose for performing long-range research on materials is to secure an understanding of the behavior of low-cost, high-performance technological materials, with a goal of extending the lifetime of these materials, or to identify new materials that will offer new options for components used in operating systems. The cost-effective deployment of DCSs is currently limited by the sorption performance, durability, and life-cycle cost of the inorganic materials used. Long-term materials research is needed that focuses on improving the properties of ADMs and identifying the reasons for degradation of their sorption performance.

The purpose of ADM R&D is to provide new materials options for DCS. The ultimate purpose is to identify materials with optimal performance in the temperature range used in a DCS in which the sorption activity of the desiccant can be routinely regenerated with an appropriate energy source. The performance of these materials can be ranked similarly to the performance of silica gel, which on a relative scale is typical of available industrial products now being sold. The life-cycle cost (i.e., initial cost, performance, and durability) has a direct relationship to the cost-effective deployment of any regenerative DCS. The identification of materials with extended lifetimes, enhanced reliability, and sustained desirable sorption properties for use in DCSs can be anticipated from a sustained R&D effort. Thus, an ADM can advance buildings technology not only by lowering the cost of DCSs to compete with conventional air conditioning but also by eliminating the need for electric utilities to add peak-load generating capacity.

3.2.2 Relationship of desiccant materials to desiccant cooling systems

Desiccant materials must have a favorable performance/cost ratio, provide satisfactory performance, and have cost-effective lifetimes. Widely available materials need to be certified, modified, or, in some cases, developed specifically for use in DCSs. Some of the important parameters for the water/solid desiccant material system include isotherm shape, sorption capacity, heat of sorption, rate of sorption at or near the desiccant bed temperature, rate of desorption at an elevated temperature, physical and chemical stability of the desiccant, and cyclic repeatability of the sorption amount and rates. Some important conclusions and recommendations on these parameters were reached in the recent modeling study for regeneration at 160°C (Collier, Cale, and Lavan, 1986), but the possibility of identifying new materials with optimal properties was not considered.

Silica gel and lithium chloride are now the most widely used desiccant materials in DCS wheel geometries. Extensive optimization studies of the engineering design of DCS units have been carried out using silica gel (Barlow, 1982; Jurinak, 1982; Pesaran and Mills, 1984; Schlepp and Schultz, 1984; Worek et al., 1991). Models in systems analysis studies for estimating the achievable thermal and electrical COP also use the properties of silica gel because they have been documented extensively over several decades. Because the water sorption properties of the desiccant are crucial to the performance of any system, a desiccant materials research effort was initiated at NREL to search for and measure the properties of materials that could not only be better desiccants than silica gel but could also approach the "ideal" desiccant material in its sorption performance. In addition, manufacturing methods with new materials could have a profound impact on reducing the dehumidifier cost.

Except for recent materials research at NREL and research funded by GRI, most of the published work in the past decade has been on silica gels and zeolites. These materials have performance limitations (e.g., isotherm shape, large heat of adsorption, and high regeneration temperatures, that restrict their potential for use in DCSs (Collier, Barlow, and Arnold, 1982; Collier, 1988). Activated carbon and activated alumina are other inorganic desiccants, but they have not been seriously studied for potential DCS applications because silica gel has better sorption properties. Therefore, an ADM is a natural research

need for enhancing the potential of cost-effective DCSs. These results led GRI to initiate a multiyear desiccant materials research program in 1986; in 1987, GRI began supporting work on hydrate-type inorganic materials at LaRoche Chemicals, Inc., proprietary organic formulations at the Eaton Corporation, and porous glass at the Research Triangle Institute, as well as fundamental efforts at the University of Pittsburgh and Penn State University.

3.2.3 Polymers as ADMs

Czanderna and Thomas (May 1986) identified both inorganic and organic (i.e., polymeric) materials as potential candidate ADMs for use in DCSs. To focus the research, they initially selected 21 commercially available polymeric materials for further study. These were listed in two reports (Czanderna and Thomas, May 1986; Czanderna, 1988). The process used to narrow the list of over 300 commercially available polymers was also reported (Czanderna and Thomas, June 1986). They identified several additional polymers as the studies progressed.

By considering the available polymeric desiccants, the following can be noted:

- Polymers have the potential of being modified so that sorption isotherms of both the desired shape and heats of adsorption of approximately 10.8 kcal/mol are obtained.
- Polymers have been identified that sorb water from 5% to more than 80% of their own weight.
- Polymers have the potential for being readily fabricated into shapes required for DCSs; e.g., a honeycomb structure 10 × 0.04 × 0.06 in.; when a desiccant polymer is not a structural material, it may be grafted onto a structural polymer.
- Polymer structures have the potential of being synthesized to provide high diffusivities of water vapor through the material.
- Polymers have the potential for being regenerated at temperatures below 80°C for thermally desorbing water.
- Polymers have the potential for maintaining long-term stability through thousands of sorption-desorption cycles.
- Commercial polymers are available at less than $2/lb, comparable to the cost of commercial-grade silica gel.

Accordingly, polymeric materials could not only serve as both the desiccant and the support structure in a desiccant wheel but may be easily and inexpensively replaced if their water sorption capacity degrades by washing, dipping, and coating processes. The initial need of this research was to characterize the water sorption performance of polymeric materials that could serve in an economically competitive DCS. The current and future needs include modifying candidate polymeric materials identified in prior work and synthesizing new polymeric materials that have the desired water vapor sorption performance properties.

The following are key technical questions in seeking candidate polymers for DCSs:

- Will any commercially available polymer have the properties required for use in a DCS? Several promising candidate materials have been identified, but none have optimum or "ideal" properties.

- Can the polymeric material be modified to improve performance properties such as isotherm shape, heat of adsorption, regeneration temperature, cyclic stability, and diffusivity?

- If commercially available polymers are not suitable, can laboratory-prepared polymers be synthesized with suitable sorption, desorption, and stability properties?

- What impurities in the airstream result in a loss of sorption performance of candidate polymers?

- Are there other degradation processes that cause a candidate polymer to lose sorption performance?

NREL research during the past 5 years has involved the use of a rapid quartz-crystal microbalance method for evaluating the performance properties of ADMs, with an emphasis on polymers. These properties include water vapor sorption isotherms, adsorption and desorption kinetics, and cyclic stability. From studies from 1987 through 1989, the commercially available polymers were narrowed to eight serious candidates for further study or modification. These are:

• Polystyrenesulfonic acid lithium salt	(PSSALS)
• Polystyrenesulfonic acid sodium salt	(PSSASS)
• Polyacrylic acid ammonium salt	(PAAAS)
• Poly(methacrylic acid) sodium salt	(PMAASS)
• Poly(n-vinylacetamide, vinyl sulfonate) sodium salt	(PVAVSSS)
• Polyacrylic acid sodium salt	(PAASS)
• Cellulose sulfate sodium salt	(CSSS)
• Methyl cellulose	(MC)

Isotherms have been published for these anionic (exchange cations) materials (Czanderna, 1988), but their cyclic stability has not been tested. Various preparations of PSSASS have been studied further (Czanderna and Neidlinger, 1990; Czanderna, 1990) and tested in prototype commercial wheels by Cargocaire Engineering. The latter tests are encouraging, which is strongly supportive of NREL's idea of searching for a polymeric desiccant.

Additional potential candidate polymers identified in FY 1990 research at NREL (Czanderna, 1990) include the following:

- PolyAMPSASS/sodium methacrylate copolymer
- PolyAMPSASS/acrylamide AMPSA sodium hydrogel
- Polyvinylbenzyltrimethyl ammonium chloride (PVBTAC)
- n-Vinylpyrrolidone dimethylaminoethyl methacrylate copolymer
- PolyAMPSASS
- PolyAMPSASS/dimethyl acrylamide copolymer
- PolyAMPSALS
- PolyAMPSASS/sodium acrylate copolymer
- PolyAMPSAKS

where AMPS is the abbreviation for 2-acrylamido-2-methyl-1-propane-sulfonic acid and is a water soluble monomer, and polyAMSASS is the sodium salt of polyAMPSA. The AMPSA and their salt derivatives are the new classes of polymers Kodak Company thought could have desirable water vapor sorption behavior. As is indicated, this class of materials and several cationic (exchange anions) polymers have

more than doubled the number of potential candidate polymers. Five of the Kodak-generated polymers have sorption behavior equal to or better than the best PSSASS or PSSALS.

Further research and development are needed on all the polymers to improve and to optimize their sorption performance properties for DCS applications. Measurements on larger samples and cross-linked formulations are also needed in addition to testing the optimized formulations for cyclic stability. Other research issues are summarized in Section 8.

3.3 Other Materials Research Activities

In addition to research funded by DOE on polymers as advanced desiccant materials, GRI has funded other materials research activities. Enerscope, Inc. (Collier, 1988) under GRI funding, has identified the desired properties of a desiccant for open-cycle solid desiccant systems. The desired isotherm shape for a desiccant is Brunauer Type 1M (Type 1 moderate) isotherm shape as discussed earlier. GRI has funded several research activities in developing Type 1M materials. The Eaton Corporation (Pusatcioglu and Novosel, 1989) has worked on developing an advanced desiccant (Type 1M) material based on ionic gel polymers. LaRoche Chemicals (Belding and Novosel, 1989; Belding et al., 1989) and Innovative Research Enterprises (Belding et al., 1991) are developing Type 1M desiccant based on hydratable salts that are capable of being directly regenerated at high temperatures using natural gas. The Research Triangle Institute has shown that porous glass can perform as a desiccant. Michigan Technological University is attempting to develop a Type 1M desiccant based on porous glass (Mullins and Cornilsen, 1990). Penn State University researchers (Komarneni, 1989) have determined the capability of nano-composite materials to perform as effective desiccants. They have identified Type 1M composites and are characterizing them. University of Pittsburgh researchers (Stockhausen and Marcelin, 1989) are determining the capability of layered double-metal hydroxides to perform as effective desiccants. They have identified Type 1M materials and are characterizing them.

The 3M Company and NREL, under funding from GRI, have collaborated on novel composite materials that bind fine desiccant particles (Anderson and Pesaran, 1990). The objective was to fabricate desiccant substrates with high moisture capacity that can eventually be incorporated into a dehumidifier wheel cost-effectively. As the first desiccant, 9-micron-size silica gel particles were captured in the fibrous web structure of polymeric substrates with minimal effect on their moisture sorptive properties. A test dehumidifier matrix fabricated from polytetrafluorethylene(PTFE)/silica-gel composite showed a 47% increase in dynamic dehumidification capacity over the state-of-the-art silica gel matrix. The desiccant/ PTFE composite has the potential to be used in fabricating prototype desiccant dehumidifiers. Manville Corp. has combined various desiccant materials with promising results. A combination microcell E with lithium chloride at 40% R.H. showed four times more sorption capacity than silica gel.

Texas Tech University researchers (Ertas et al., 1990) are investigating the properties of solutions of lithium chloride and calcium chloride. Researchers expect to obtain a solution that has high moisture capacity, low cost, and low viscosity suitable for liquid desiccant systems.

Studies to optimize thermophysical properties of liquid desiccants for open-cycle cooling applications have not been conducted in detail yet. Present systems use several types of liquid desiccants, both organic and inorganic. Some of these are triethylene glycol and salt solutions (lithium chloride, lithium bromide, and calcium chloride). Although some salt solutions such as lithium chloride have very good properties for dehumidification applications, they are corrosive and require special contact surfaces and containers. The problem with glycol solutions is their relatively high vapor pressure and potential for carry-over, which may cause contamination of the supply air. Future R&D activities should focus on development of liquid

desiccants with improved properties. GRI is funding a project at NREL to investigate the development of improved liquid desiccants.

The "ideal" materials of choice for closed-cycle desiccant systems have not been studied in detail yet. The state-of-the-art system uses zeolite/water as the desiccant/refrigerant pair. Other pairs such as activated carbon/ammonia or activated carbon/methanol have also been used. Future studies should focus on understanding the effect of desiccant materials and refrigerants on system performance.

3.4 Desiccant Degradation

The useful life of desiccant dehumidifiers for heat-regenerated desiccant cooling applications is a concern of manufacturers and end users. The useful life of a dehumidifier depends mainly on the useful life of the desiccant material in the dehumidifier. The useful life depends on the process and magnitude of degradation, which can be caused by hydrothermal cycling and exposure to contaminants. Based on hypothetical degradation scenarios, it is estimated (Pesaran and Bingham, 1988; Pesaran and Bingham, 1991) that desiccant degradation can significantly reduce the performance of a desiccant cooling system (up to 35%).

Desiccant degradation has been observed in some *industrial* dehumidification applications in which the process stream contains high concentrations of harsh pollutants. For *residential* and *commercial* air conditioning applications, degradation is expected to be less. However, no substantiating experimental data existed until recently. Few published studies have quantified the moisture sorption change caused by contamination. Farouk et al., (1980)[11] found that the rate of moisture adsorption by three desiccants (molecular sieve, activated alumina, and silica gel) was reduced 50% by the presence of 5% dust in air typically found in agricultural grain processing areas. They also found that dust particles 10 to 20 μm in diameter did not reduce the equilibrium moisture capacity of desiccants. Moseman and Bird (1982)[12] carried out experiments on desiccant degradation by natural gas and found that after only 284 regeneration cycles, the silica gel capacity dropped by almost 20%. With a limited number of data points, Pesaran et al. (1986) found that from 7% to 50% of the moisture capacity of silica gel can be lost, depending on the regeneration and exposure method.

Comprehensive experimental data on degradation of desiccants under conditions experienced in heat-regenerated desiccant cooling applications are needed. NREL has conducted contamination tests. Six different solid desiccants have been exposed to cigarette smoke for 10 months and their sorption and other properties have been measured (Pesaran and Penney, 1991). Further details about their work is presented in Appendix A. Figure 3-2 shows the capacity loss of several desiccant samples exposed to humid air charged with cigarette smoke under worst-case conditions. Based on obtained experimental data, Pesaran (1990) has predicted a 10% to 35% drop in thermal COP and cooling capacity of a ventilation cooling system under the worst conditions. Pesaran (1990) concluded that under more realistic conditions, desiccant degradation would not be a major problem for applying desiccant cooling technology to commercial and residential buildings.

---

[11]Farouk, S.M., G.H. Brusewitz, and P.D. Bloome, 1980, "Desiccant Moisture Sorption as Altered by Dust," ASAE, Paper No. 80-3084.

[12]Moseman, M.H., and G. Bird, 1982, "Desiccant Dehydration of Natural Gasoline," *Chemical Engineering Progress*, Vol. 78, No. 2 pp. 78-83.

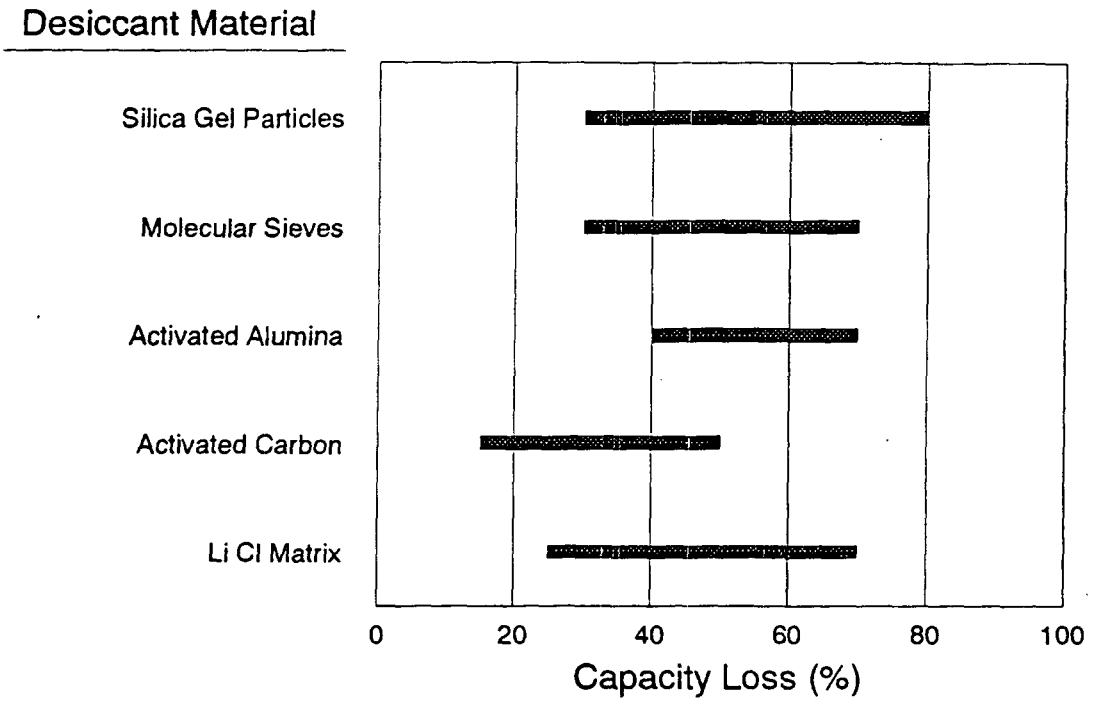

Figure 3-2. Moisture capacity loss of several desiccants because of thermal cycling and exposure to cigarette smoke under worst-case conditions for an estimated 10 years

3.5 Summary

The performance of desiccant cooling and dehumidification systems depends strongly on the thermophysical properties of the desiccant material used. Existing solid desiccant materials (silica gel, lithium chloride salts, molecular sieve), though satisfactory for industrial dehumidification, are not optimal for cooling applications. An analytical study has identified the "ideal" or desired shape for sorption isotherm of desiccants to be Brunauer Type 1M (moderate).

R&D efforts are under way to synthesize/fabricate desiccant materials with Type 1M isotherm characteristics—desiccant polymers for low-temperature applications (less than 100°C) and inorganic desiccants such as hydratable salts for high-temperature applications (higher than 120°C). Regardless of the solid desiccant material type, it must be easily and inexpensively integrated into structures for manufacturing dehumidifiers. The major focus of future R&D efforts for solid desiccants should be in the direction of developing cost-effective desiccant structures. A research study indicated that desiccant contamination will not be a problem for HVAC application of solid desiccant cooling technology.

Leading commercially available liquid desiccants are lithium chloride solutions and triethylene glycol. Though they are quite satisfactory for industrial and some commercial dehumidification applications, they have perceived problems of corrosion or carryover in widespread HVAC applications. However, liquid desiccants have not received much R&D attention in the past. Studies to optimize thermophysical properties of liquid desiccants for cooling applications are limited. Future R&D efforts should focus on development and characterization of liquid desiccants that have high moisture capacity, are not corrosive or toxic, and have low vapor pressure.

4.0 Desiccant Components: Status of Science and Technology

4.1 Introduction

The major components in a desiccant cooling system are: dehumidifier, regenerative heat exchanger, direct or indirect evaporative coolers, fans, heaters, and control hardware. In addition to these components, advanced desiccant cycles use cooling towers, and hybrid desiccant systems use vapor compression components. Most of the components, except the desiccant dehumidifier, have been evolving for many years within other technologies. For example, relatively inexpensive and efficient heat exchangers, evaporative coolers, and fans are available commercially. Therefore, the desiccant dehumidifier has received the most attention over the last 15 years of desiccant cooling R&D. Recent R&D efforts on dehumidifiers have focussed on improving their performance and reliability and reducing their cost and size. In this section, we will present the recent chronology of commercial and experimental/developmental dehumidifiers.

The performance, cost, size, and reliability of a dehumidifier depend on two interdependent parameters: desiccant material and matrix geometry. The physical form of the material affects the shape of the matrix geometry. For example, inexpensive desiccant particles with sizes of 2-4 mm cannot be fabricated into low pressure-drop parallel-passage geometries.

The desirable characteristics for high-performance solid desiccant dehumidifiers are:

- Suitable desiccant properties (as discussed in Section 3.0)
- High heat- and mass-transfer rates or high Number of Transfer Units (NTUs) (see Figure 4-1)
- High ratio of heat-transfer rate (Stanton number) to pressure drop (friction factor) (see Figure 4-2)
- Small resistance to moisture diffusion in the desiccant or low Lewis number (see Figure 4-2)
- Large transfer surface area per unit volume
- Low thermal conductivity materials
- Use of common materials and inexpensive manufacturing techniques
- Low heat input for regeneration.

The desirable characteristics for high-performance liquid desiccant dehumidifiers are similar to those of solid systems:

- Suitable desiccant properties (as discussed in Section 3)
- High heat- and mass-transfer rates or high NTUs
- Low pressure drop
- Small liquid-side resistance to moisture diffusion
- Large contact transfer surface area per unit volume
- Compatible desiccant/contact materials
- Use of common materials and inexpensive manufacturing techniques
- Low heat input for regeneration.

A number of investigators have concluded that for the air conditioning applications, a solid dehumidifier matrix must have a parallel passage configuration (as opposed to packed-bed type). Under laminar flow conditions, a parallel passage configuration is compact and provides a high heat- and mass-transfer rate with low pressure drop. Figure 4-2 shows the theoretical heat-transfer and pressure drop characteristics of various flow geometries. Since early 1980s, dehumidifiers with a packed-bed configuration have not been considered for air conditioning applications because of excessive pressure loss. Corrugated (sine-wave), honeycomb, and parallel plates are among various parallel passage configurations. Desiccant

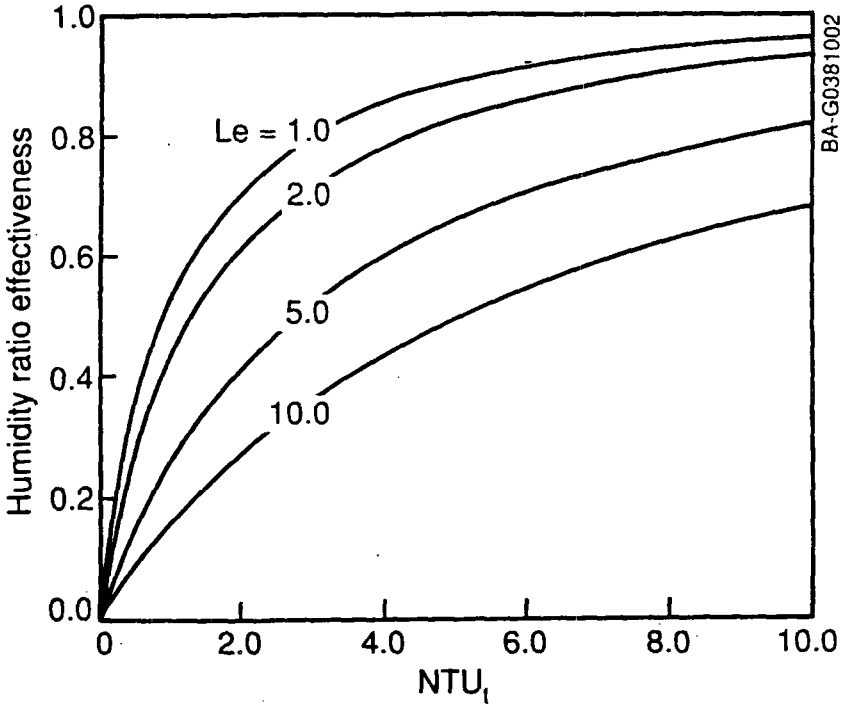

Figure 4-1. Impact of heat- and mass-transfer parameters on dehumidifier effectiveness (Le = Lewis number, ratio of moisture transfer resistance to heat transfer resistance in a desiccant particle)

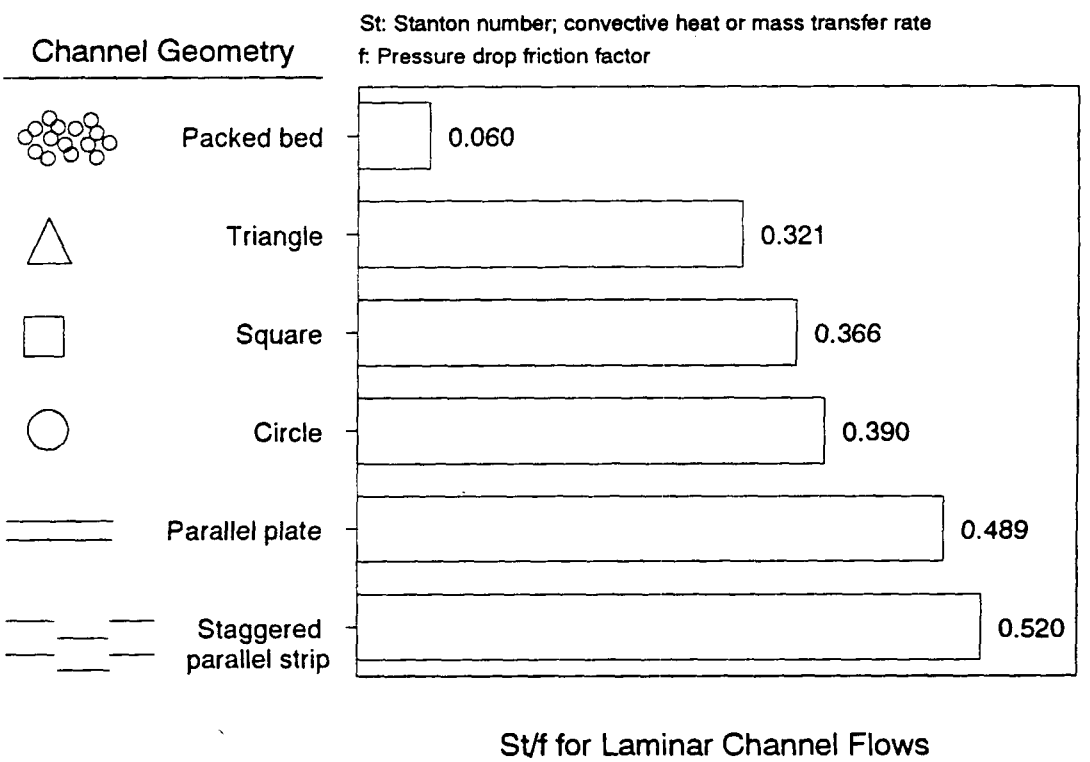

Figure 4-2. Ratio of heat-transfer rate to pressure drop for various dehumidifier passage geometries

materials for use in solid dehumidifiers should have the capability of being impregnated, embedded, or coated within a matrix. There are trade-offs between choices of materials, geometries, manufacturing techniques, costs, reliability, and maintenance.

4.2 Commercial Dehumidifiers

A number of commercial dehumidifiers, traditionally used for industrial and special drying applications, are available from several manufacturers. In recent years, these dehumidifiers have increasingly been used for air conditioning purposes. The circumstances that provide an opportunity for their use are: the need for dryness for very low dew points, high latent load versus sensible load, high electricity cost versus low thermal energy cost, and the need to avoid condensed water in air handling systems.

U.S. manufacturers of solid desiccant dehumidifiers include Bry-Air, Inc., Cargocaire/Munters, Miller-Picking Company, and Airflow Company. In the last few years, a number of Japanese firms have also marketed solid dehumidifier wheels. The Bry-Air dehumidifier is a modular vertical bed system consisting of rectangular bed sections mounted vertically in a circular arrangement. Each packed bed contains a granular desiccant (usually silica gel) that moves vertically into the reactivation or process airstreams. The Cargocaire dehumidifier is a corrugated/honeycomb structure impregnated with lithium chloride. The dehumidifier is a rotary wheel that rotates between the reactivation and the process airstreams for removing the moisture. Miller-Picking produces both dual packed-bed and impregnated rotary dehumidifiers utilizing silica gel or molecular sieves. The Airflow dehumidifier consists of desiccant (silica gel or molecular sieve) granular filled in a disc rotating between the process and reactivation air streams. Among recent products of Airflow are corrugated rotating dehumidifiers impregnated with molecular sieve or silica gel. The Japanese dehumidifiers are corrugated or honeycomb rotary wheels that contain either silica gel, lithium chloride, or molecular sieve. Among the Japanese manufacturers are Daikin, Nichias, Seibu-Giken, Sharp, and Toyobo. In 1984, American Solar King (ASK) introduced a lithium-chloride-impregnated corrugated dehumidifier wheel as part of a gas-fired or solar desiccant cooling system (Energymaster).

Among the U.S. manufacturers of liquid desiccant dehumidifiers are Kathabar Systems (of Somerset Technologies) and Niagara Blower Company. The Kathabar Systems dehumidifier utilizes a packed-tower spray chamber with lithium chloride solution. The Niagara Blower dehumidifier uses sprayed coil configuration with triethylene glycol. Both dehumidifiers have a conditioner (to dry air) and a regenerator (to remove absorbed moisture from desiccant). In the past few years, other companies have purchased desiccant components from others and have built and are selling packaged systems that can include cogeneration, hybrid (with vapor compression), and dual-wheel options using direct and or indirect evaporative coolers. These companies include ICC Technologies, Gershon Meckler Associates, Kohler Company, IAQ Products, Airexchange, and others.

Not all of the commercially available dehumidifiers are suitable for air conditioning applications. Because most of them were designed for industrial applications they are typically expensive and quite large. However, a number of these dehumidifiers have been used in systems for special (niche market) air conditioning applications. These systems will be discussed in Section 5.

4.3 Prototype Dehumidifiers

A number of experimental and prototype dehumidifiers have been developed and tested as part of the national R&D programs. The Institute of Gas Technology (IGT) developed and tested a molecular sieve impregnated corrugated rotary dehumidifier wheel in 1970s. IGT, the AiResearch Manufacturing

Company, and the Exxon Research and Engineering Company were involved in testing the dehumidifier in a ventilation cycle and obtained cooling coefficient of performance (COP) slightly over 0.5.

A number of investigators predicted better performance (cooling COP over 1.0) with silica gel in a parallel plate configuration. UCLA researchers build and tested a bench-scale test dehumidifier with parallel plates coated with a layer of fine silica gel particles. NREL combined the UCLA concept with one using a rotary heat exchanger construction developed by CSIRO in Australia.

NREL, with the assistance of a plastic parallel-plate heat exchanger manufacturer, built and tested two rotary dehumidifier prototypes. These dehumidifiers had parallel plate channels coated with fine particles of silica gel. The first dehumidifier used 300-micron particles, and the second dehumidifier used 100-micron silica-gel particles. Although the length of the second dehumidifier was half that of the first and used one-third the silica gel mass, the second dehumidifier performed slightly better due to higher NTUs. The test results indicated that a cooling COP of over 1 could be achieved in a ventilation cycle using this dehumidifier design. Later, NREL researchers built a bench-scale dehumidifier matrix with silica gel and staggered-parallel-strip configuration (Pesaran, 1987). The staggered configuration caused break-up of the boundary layers in the channels and increased both pressure drop and moisture (or heat) transfer rate. Tests indicated that the increase in moisture transfer rate was higher than pressure drop. They concluded that a smaller dehumidifier was possible with this design. However, the cost of fabrication might be higher than a parallel-plate configuration.

The majority of solid dehumidifiers including the rotary devices work adiabatically. The Illinois Research Institute (IIT) has developed and tested a cooled-bed dehumidifier that worked near isothermal conditions. The IIT cooled dehumidifier consisted of two fixed, parallel-plate, crossflow exchangers. The flow channels were formed by aluminum trays lined with Teflon-bonded silica gel sheets. Although ideal cooled dehumidifiers may be more efficient than adiabatic dehumidifiers, their fabrication into compact units is difficult.

Semco, supported by GRI, is developing a low-cost solid desiccant dehumidifier design based on cost-effective manufacturing techniques. LaRoche Chemicals, with funding from GRI, is developing dehumidifier structures incorporating Type 1M desiccant based on hydratable salts. In recent years, the concept of "staged regeneration" patented by Glav (1966) has been reintroduced and has improved the performance of dehumidifiers. The basic idea of this concept is to heat only a fraction of regeneration air stream to the maximum regeneration temperature. The regeneration process consists of two stages. In the first stage, the air exiting from the warm side of the sensible heat exchanger is used for regeneration of the desiccant without adding external heat. In the second stage, the remainder of the air exiting the heat exchanger is used with additional external heat to regenerate the desiccant.

For a closed-cycle desiccant cooling system, Zeopower Company has developed and tested an adsorber/desorber device. It consists of two sealed containers each having a serpentine-like zeolite and heat transfer fluid. The fluid removes the heat of adsorption when the zeolite adsorbs moisture or transfers heat to regenerate the zeolite. One container adsorbs moisture while the other is regenerated. Using this adsorber/desorber combination, Zeopower has achieved a cooling COP above 1.2 in a closed-cycle regenerative heat pump prototype.

A number of developments have also occurred for liquid desiccant dehumidifiers. Kathabar has developed a gas-fired liquid desiccant dehumidifier module, called a "humidity pump." In this dehumidifier, lithium chloride solution is sprayed over a packed column for moisture exchange. The humidity pump, designed to remove the latent load, is added to the electrically driven refrigeration air conditioner of a commercial building to provide a total of 20 to 100 tons of cooling.

Tecogen, Inc. and Kathabar, under sponsorship of GRI, have developed and tested a prototype residential dehumidifier that can also be used for retrofit applications. The indoor air is dehumidified in the conditioner, which consists of a plate heat exchanger. The indoor air is sprayed with lithium chloride as it passes through the plates. The dehumidifier also uses a direct evaporative cooler, a boiler regenerator, an interchanger heat exchanger. Bacchus Industries, with the support from GRI, is improving this prototype for commercialization.

Most of the other developmental liquid desiccant dehumidifiers (absorber/regenerator combinations) are an integral part of a desiccant cooling system. We discuss these systems in Section 5.

4.4 Summary

Rotary dehumidifiers with laminar flow geometries (corrugated, honeycomb, or parallel plate) have become the choice for solid-desiccant cooling systems. Solid desiccants are either coated, embedded, or impregnated on or within the walls of the dehumidifier. Commercial dehumidifiers with these characteristics are available in the market. However, they are somewhat expensive. Mass production is expected to reduce their cost when the demand for desiccant cooling systems increases. Available commercial dehumidifiers use either silica gel, molecular sieve, or lithium chloride salt. R&D efforts are under way to develop dehumidifiers with the desirable Type 1M isotherm shape using polymeric desiccants or hydratable salts.

Commercial liquid dehumidifiers that use lithium chloride or triethylene glycol are also available for industrial and institutional applications. R&D efforts are under way to develop liquid dehumidifiers for residential and commercial applications.

5.0 Systems: Status of Technology

Since N.A. Pennington introduced his patent on a desiccant cooling cycle in 1955, there have been a number of improvements in components and cycle configurations. In this section we will discuss the recent history of both solid and liquid desiccant cooling cycles. Closed-cycle, hybrid, and integrated desiccant cooling systems will be also discussed.

5.1 Open-Cycle Solid Desiccant Cooling Systems

Solid desiccant cooling systems have been investigated extensively at the component and system levels both analytically and experimentally. Several system configurations have been proposed. These systems will be briefly described here.

Two open-cycle systems that use adiabatic dehumidifiers have received most of the attention to date. These are the Pennington or "ventilation cycle," shown in Figure 5-1, and the recirculation cycle shown in Figure 5-2. A similar cycle with two heat exchangers, proposed by Dunkle (1965), has not received much attention.

In an adiabatic dehumidifier the temperatures can become fairly high because of the heat released during the adsorption process. This either limits the amount of dehumidification or increases the required regeneration temperature. By cooling the dehumidification process, either increased dehumidification (and therefore cooling capacity) or reduced regeneration temperatures (and therefore better solar system performance) can be expected. The ventilation and recirculation cycles are not appropriate for use with a cooled dehumidifier.

An appropriate configuration for nonadiabatic operation, shown in Figure 5-3, has been proposed by researchers at the Illinois Institute of Technology (IIT) (Lavan, Worek, and Monnier, 1981). Evaporatively cooled ambient air is used to cool the dehumidifier while adsorption is taking place. While this may improve the dehumidification process, it also throws away the heat of adsorption that is reclaimed in the adiabatic cycles. For this reason, overall system performance with COP of 0.6 (Schultz, 1983) is not improved. Note also the need for an additional heat exchanger and evaporative cooler in the cooled system. The cross-cooling configuration of the isothermal dehumidifier makes fabrication of a compact system difficult. Overall, cooled systems do not appear to have any advantage over adiabatic systems though other isothermal dehumidifier configurations may have some potential.

A number of investigators have analytically studied the Pennington (ventilation) cycle with different desiccant materials, components, and ambient conditions. The performance is a strong function of heat exchanger effectiveness. The predicted cooling COP varied from 0.5 to 1.4. Table 5-1 shows some of the predicted performances for several desiccant cooling cycles under ARI standard design conditions. With Type 1M desiccant material and staged regeneration, one can realistically obtain COPs over 1.1 with ventilation or recirculation cycles. Tests at Colorado State University have shown COPs varying from 0.7 to 1.5 under various conditions for the ventilation cycle. Recent theoretical research into advanced open-cycle desiccant cooling cycles has shown the possibility of substantially higher thermal COPs. Using second-law analysis, Lavan et al. (1982) calculated the thermal COP for a thermodynamically reversible ventilation cycle at standard test conditions as 4.66. Maclaine-cross (1985) has proposed an ideal open-cycle desiccant cooling cycle requiring no thermal energy at standard test conditions, which translates into an infinite thermal COP (= cooling output/thermal energy input).

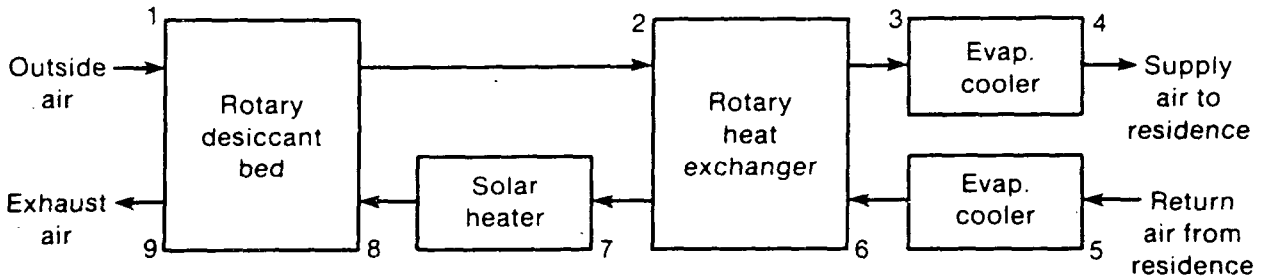

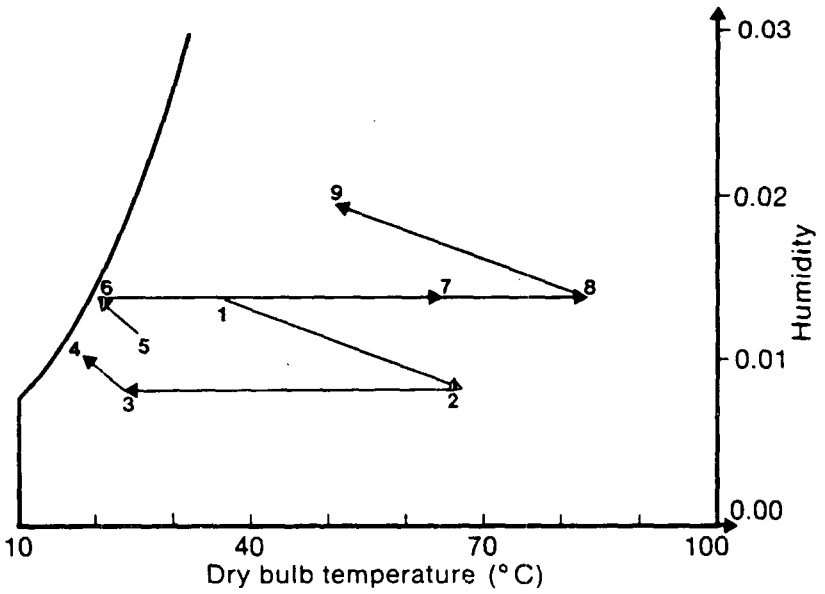

Figure 5-1. Schematic of a desiccant cooling ventilation cycle

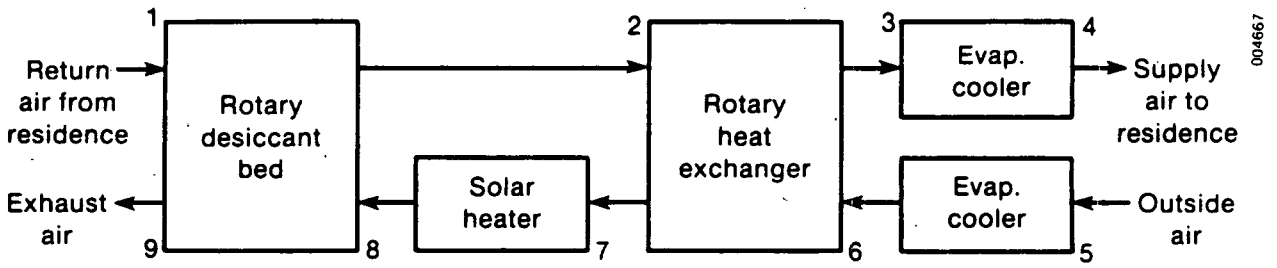

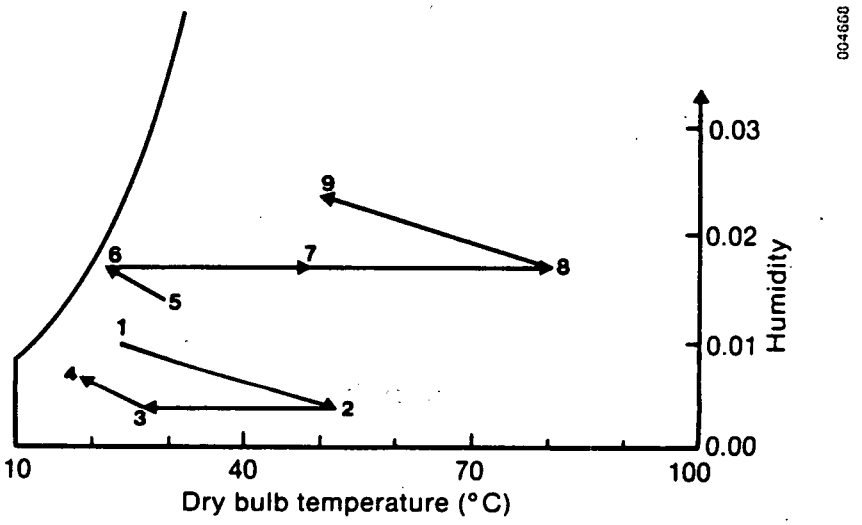

Figure 5-2. Schematic of a desiccant cooling recirculation cycle

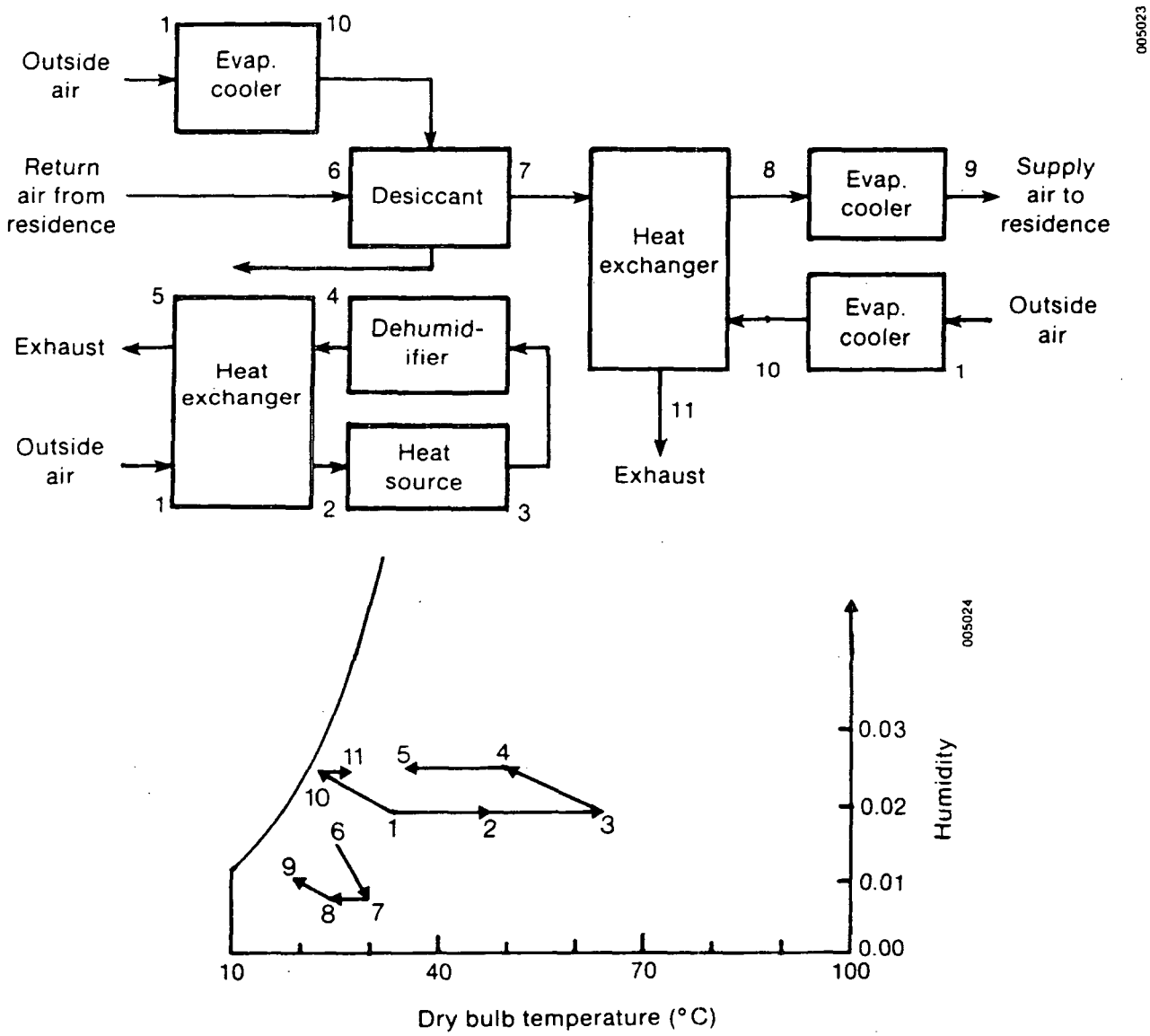

Figure 5-3. Diagram of Illinois Institute of Technology cooled desiccant cycle (Note that there are two independent airstreams, 6-7 and 3-4, that pass the cross-flow dehumidifier)

Table 5-1. Desiccant Cooling Cycle COP Values at ARI Standard Conditions			
Cycle	Investigators	Thermal COP*	Comments
Pennington	Schlepp and Barlow (1984)	1.2	E_{hx} = 0.93, E_{ec} = 0.95, high dehumidifier performance
Pennington	Jurinak, Mitchell, Beckman (1984)	0.53 to 1.02	E_{hx} = 0.85, E_{ec} = 0.90
Pennington	Grolmes, Epstein (1982)	1.4	High heat capacity, E_{hx} = 0.95, E_{ec} = 0.95
Pennington	Husky et al. (1982)	1.1	Staged regeneration, E_{hx} = 0.90, E_{ec} = 0.90
Pennington	Majundar, Worek, and Lavan (1982)	0.5	Low dehumidifier performance
Recirculation	Majundar, Worek, and Lavan (1982)	0.7	Normal heat exchanger effectiveness
Cooled bed	Lavan, Worek, and Monnier (1981)	0.6	Cooled bed configuration
Recirculation	Jurinak, Mitchell, Beckman (1984)	0.50 to 0.78	E_{hx} = 0.85, E_{ec} = 0.90
Pennington	Collier, Novosel, Worek (1990)	1.1	Type 1M desiccant and staged regeneration, E_{hx} = 0.93, E_{ec} = 0.90
REVERS	Kang (1985)	1.25	Ideal components
SENS	Kang (1985)	2.58	Ideal components
DINC	Waugaman and Kettleborough (1987)	1.10 to 1.93	E_{hx} = 0.95, E_{ec} = 0.95, high dehumidifier performance

*Comparisons may not be valid because of use of different heat exchanger effectiveness.
E_{hx} = Heat Exchanger Effectiveness
E_{ec} = Evaporative Cooler Effectiveness

In early designs of the ventilation cycle, high heat exchanger effectiveness (>0.92) was needed to achieve high COPs (>1.0). The size (and cost) of the heat exchanger increases with its effectiveness. Using Type 1M material, high regeneration temperature (165°C) and staged regeneration (0.16 fraction) can reduce the need for high heat exchanger effectiveness. Worek et al. (1991) projected that minimum losses in performance can be obtained when heat exchanger effectiveness was reduced from 93% to 87% (a 50% reduction in heat exchanger size). Thus, a combination of advanced materials and staged regeneration and high regeneration temperature could result in an order-of-magnitude reduction in heat exchanger size.

Several modifications of the ventilation or recirculation cycles have been proposed that suggest higher COP values can be achieved by modifying the cycle. One important modification was proposed by Maclaine-cross (1988). This system is called the simplified advanced solid desiccant (SENS) cycle, and he has predicted that COP values of above 2.0 can be achieved. The schematic of the SENS cycle is shown in Figure 5-4. In this cycle, ambient air is first dehumidified in a rotating desiccant wheel, then cooled in the rotating heat exchanger. It is then mixed with air recirculated from the building and passed through a finned-coil heat exchanger supplied with cold water from a small cooling tower. Some of the cooled air from the finned coil is supplied to the cooling tower where it is discharged to the atmosphere;

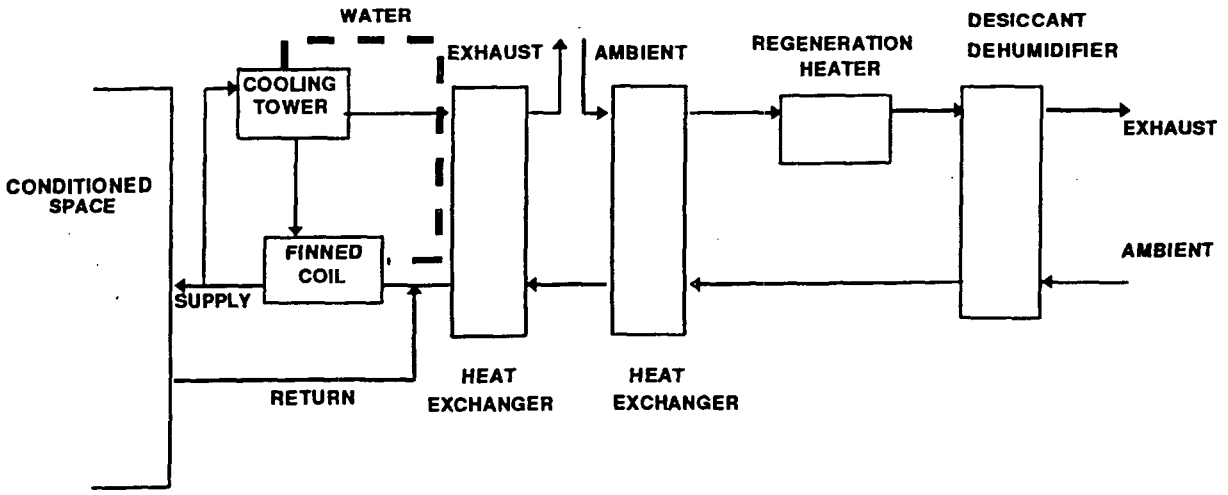

Figure 5-4. SENS cycle

the remainder is supplied to the building conditioned space. On the desorption (regeneration) side, outdoor air is passed through the heat exchanger, is heated in the regenerator, and is finally passed through the desiccant wheel where the desiccant is regenerated. The SENS cycle has been tested at the Solar Energy Applications Laboratory (SEAL) at Colorado State University (Löf and Appleyard, 1988).

The SENS cycle has been investigated further by Kang (1985), who predicted a COP of 2.58, assuming ideal components. Because of the additional heat exchanger and the nature of the finned coil and cooling tower components, this cycle is more complicated and expensive to construct than the Pennington cycle. The "REVERS" cycle proposed by Maclaine-cross (1985) and shown in Figure 5-5 is similar to the SENS cycle but is simpler because there is one less heat exchanger. Apparently the name "REVERS" was chosen for the reversible nature of the evaporative cooling in the finned coil. Kang (1985) predicted a COP of 1.25 for ARI standard conditions, but again, this prediction was for ideal components. The low thermal COPs found in the Pennington cycle, and recirculation cycle, and the complexity of the "SENS" cycle, have motivated the direct, indirect evaporative coolers (DINC) cycle proposed by Waugaman and Kettleborough (1987).

Figure 5-6 is a schematic of the DINC cycle. A commercially available, plastic-plate, indirect evaporative cooler followed by a direct evaporative cooler replaces the cooling-tower and finned-coil components of the "REVERS" cycle. Depending on the dehumidifier size, desiccant material, and other component performance, Waugaman has predicted COPs from 1.1 to 1.93 under AIR standard conditions.

A number of prototype desiccant cooling systems have been developed and field tested. Most of them operate based on the Pennington cycle. The Institute of Gas Technology (IGT) built and tested a number of prototypes in the 1970s. The COP of the prototypes was generally low (below 0.7) primarily because of limited dehumidifier performance. With the addition of the concept of "staged regeneration," Exxon Research/Engineering Company and IGT could achieve COPs near 1.1. The regenerator temperatures were about 50°C to 70°C for the solid lithium chloride wheel. An auxiliary boiler provides heat if necessary. Testing at SEAL produced COP values of about 2.45 at 26°C ambient and 26% relative humidity.

In 1984, American Solar King introduced a packaged desiccant cooling/heating system (called Energymaster) for residential applications (Coellner, 1986). The system used the Pennington cycle and

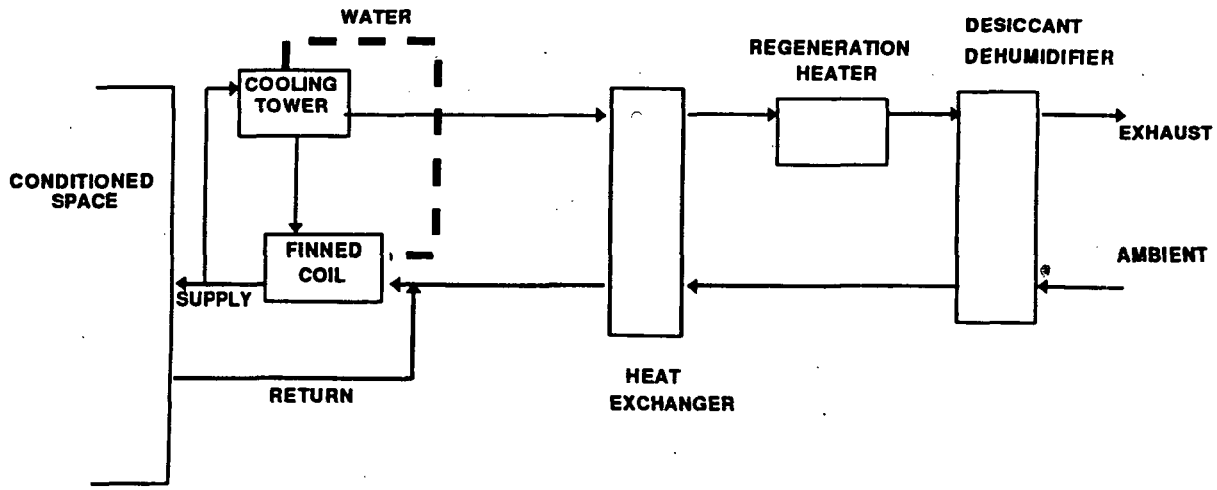

Figure 5-5. REVERS cycle

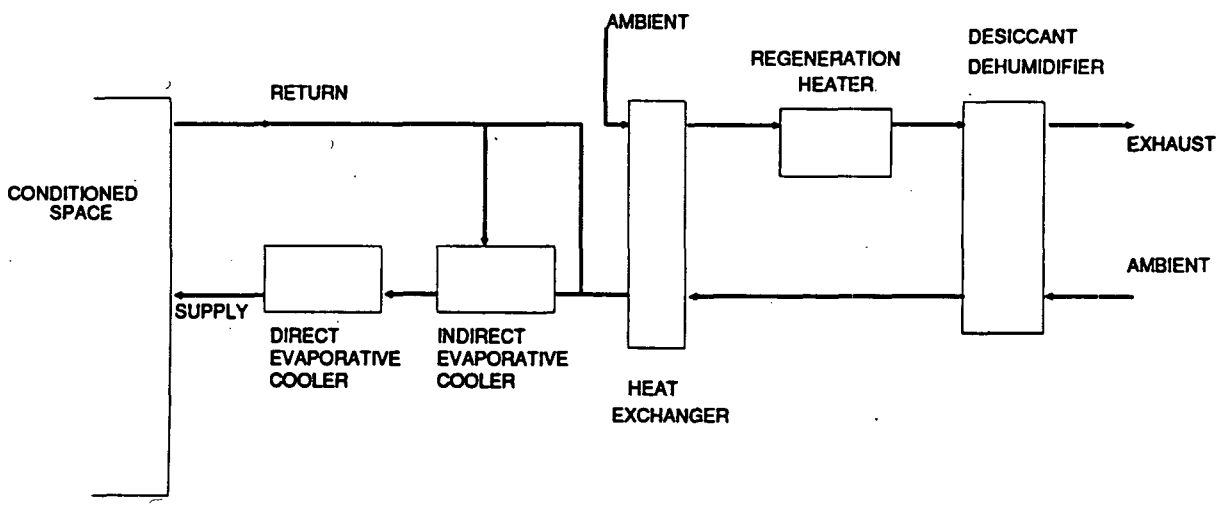

Figure 5-6. DINC cycle

a lithium chloride impregnated honeycomb wheel that could be regenerated with solar or natural gas. A thermal COP around 1 was achieved with the nominal 3- or 4-ton Energymaster system.

Tecogen, Inc., with funding from GRI, has built and tested a 3- to 5-ton laboratory prototype of a Pennington cycle and has achieved COPs above 0.8. Arthur D. Little (ADL) has developed a 1- to 3-ton desiccant dehumidifier system for residences that can be integrated with the electric vapor compression systems (Teagan and Novosel, 1989). McDonald's Corporation has evaluated the potential of using a 5-ton desiccant dehumidification system as make-up air units integrated with existing air conditioners for restaurants. Prototype desiccant units were tested for several months at an actual restaurant, and the results were encouraging (Koopman and Kosar, 1989).

The technical viability of desiccant cooling systems based on the Pennington cycle has been demonstrated. Currently, the system is economically viable where the thermal energy is much cheaper than electrical energy and the latent fraction of the cooling load is high. Initial equipment costs need to be lowered to achieve acceptance in the HVAC market. Reducing the size and improving the efficiency must also be considered for market penetration.

5.2 Closed-Cycle Solid Desiccant Cooling Systems

The operation of a closed-cycle solid desiccant cooling system is similar to that of a thermally activated heat pump. The cooling and heating effects are achieved by the evaporation and condensation of an adsorbate (as refrigerant) on the walls of desiccant containers. Zeopower is the only company that investigates fabrication of this closed-cycle. In the Zeopower design, the system has two zeolite containers acting alternatively as evaporator and condenser (Tchernev and Clinch, 1989). A simple schematic of the Zeopower system is shown in Figure 5-7.

This system uses vaporization and condensation of water within containers 1 and 2 to exchange heat with chilled water circulated to the cooled space. Oil is used to cool and heat the desiccant (zeolite) within the containers 1 and 2. A pump is used to circulate the oil in a closed loop through the oil-air heat exchangers and the zeolite containers. The evaporator/condenser is located inside the zeolite container as shown in Figure 5-8. The outside cooling coil circulates water through the evaporator and is used to conduct the heat of vaporization to the chilled water according to cooled space requirements.

The oil leaving the adsorber is heated further by the gas boiler to about 200°C and is passed into the container operating in the desorption mode. As the temperature of the zeolite is increased, the refrigerant (water) is desorbed and the pressure in the container increases. The refrigerant condenses on the walls of the container and the heat of condensation is rejected to the outside air during the cooling season or is used to provide part of the heating load during the heating season. The oil is further cooled in an oil-to-air heat exchanger to about 38°C, which can provide heat to the conditioned space during the heating season. With support from GRI, Zeopower has built and tested a prototype Zeolite heat pump. Zeopower has found that a cooling COP of above 1.2 can be achieved (Tchernev and Clinch, 1989). Zeopower expects that the manufacturing cost of a 3-ton Zeolite heat pump would be only slightly higher than a comparable electric unit. Hajji, Worek, and Lavan (1989) numerically investigated the performance of a closed-cycle adsorption cooling system and found that at infinite mass- and heat-transfer coefficients, the cooling COP can reach 2.05. A Japanese manufacturer is investigating a similar heat pump system using the activated-carbon/ammonia pair.

5.3 Open-Cycle Liquid Desiccant Cooling Systems

Liquid desiccant systems have not been extensively investigated in the past because of the modest COP values predicted were usually below 1.0. However, liquid desiccants have some advantages over solid desiccant systems. Because the energy is stored in the form of chemical energy rather than thermal energy, the reliance on continuous thermal energy supplies is reduced, and the amount of energy stored is greater. Liquid desiccants do not require complex dehumidifier geometries as the desiccant is usually sprayed over the incoming air and can be regenerated on relatively inexpensive open-flow collectors or tanks. Liquid desiccant systems also offer greater design flexibility than solid systems because the components can be installed in different locations and the liquid pumped between them. The advantage of this is that the supply and exhaust air ducts can be installed in separate locations. The disadvantages of liquid desiccant system can be its large size at low capacities. Liquid desiccants can have either carry-over problems (such as glycols) or corrosion problems (with salt solutions) if not designed properly.

In a liquid desiccant cooling system, the air is dehumidified by contact with a strong solution of liquid desiccant (in the conditioner) on removal of moisture. The solution becomes dilute (weakens). The dilute solution is directed to the regenerator where heat drives out the moisture and strengthens the solution to be returned to the conditioner. Figure 5-9 provides an example of a liquid desiccant cooling system. Cooling in liquid systems can be achieved by water from cooling towers, a well, or a chilled water system, or by cooler air (from evaporative or refrigerative coolers).

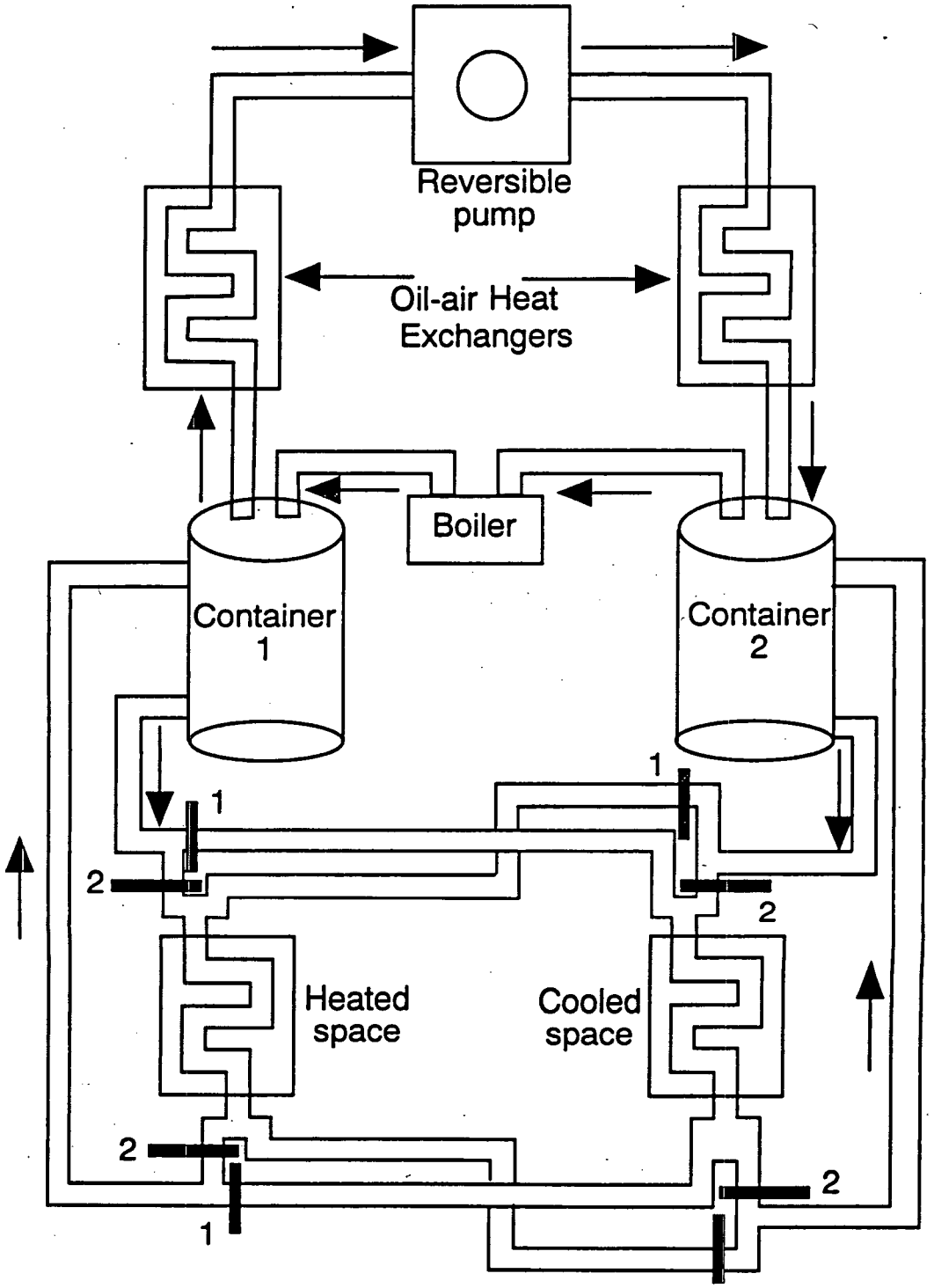

Figure 5-7. Schematic of a closed-cycle zeolite heat pump

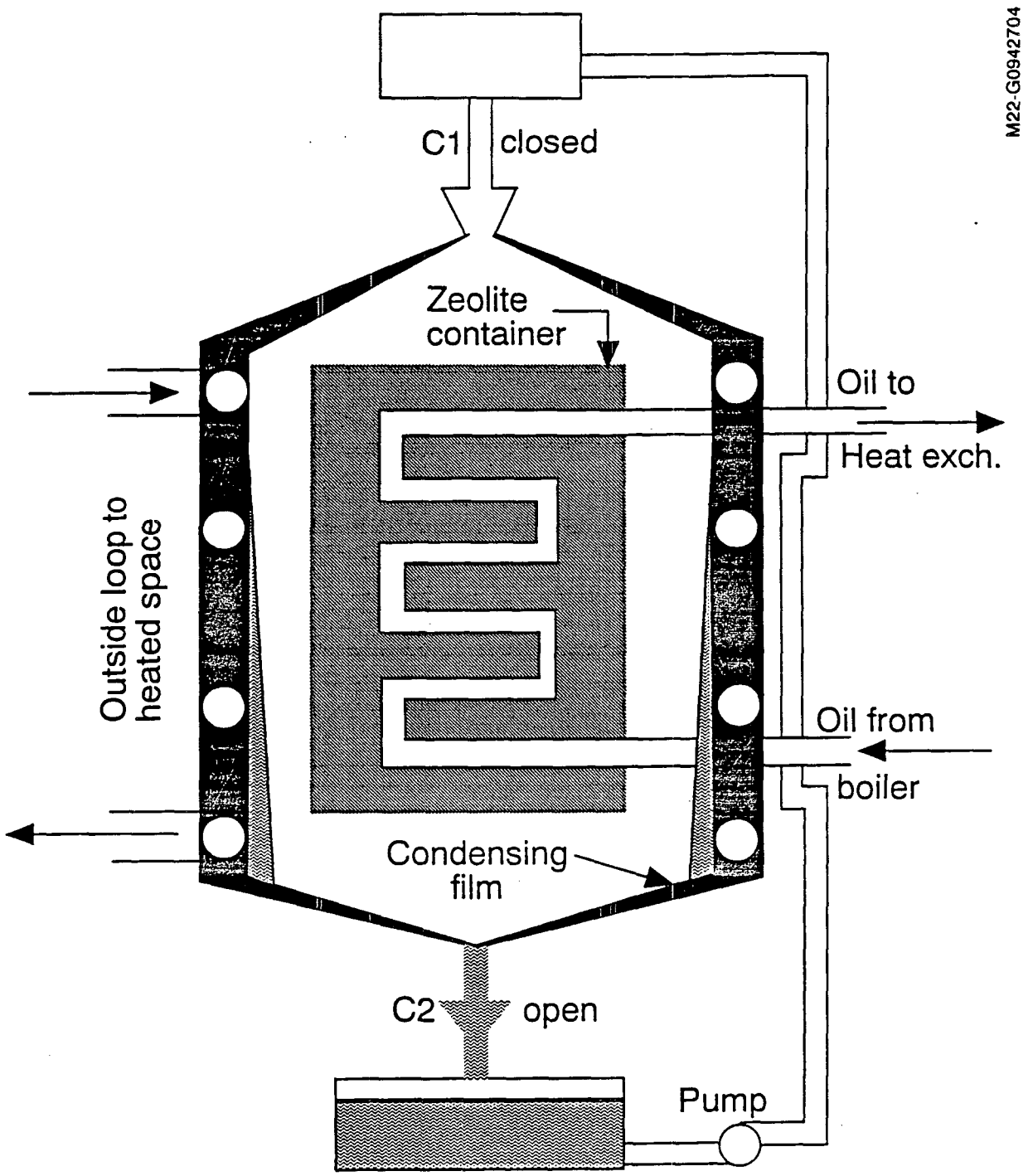

Figure 5-8. Condenser/evaporator used in the zeolite heat pump

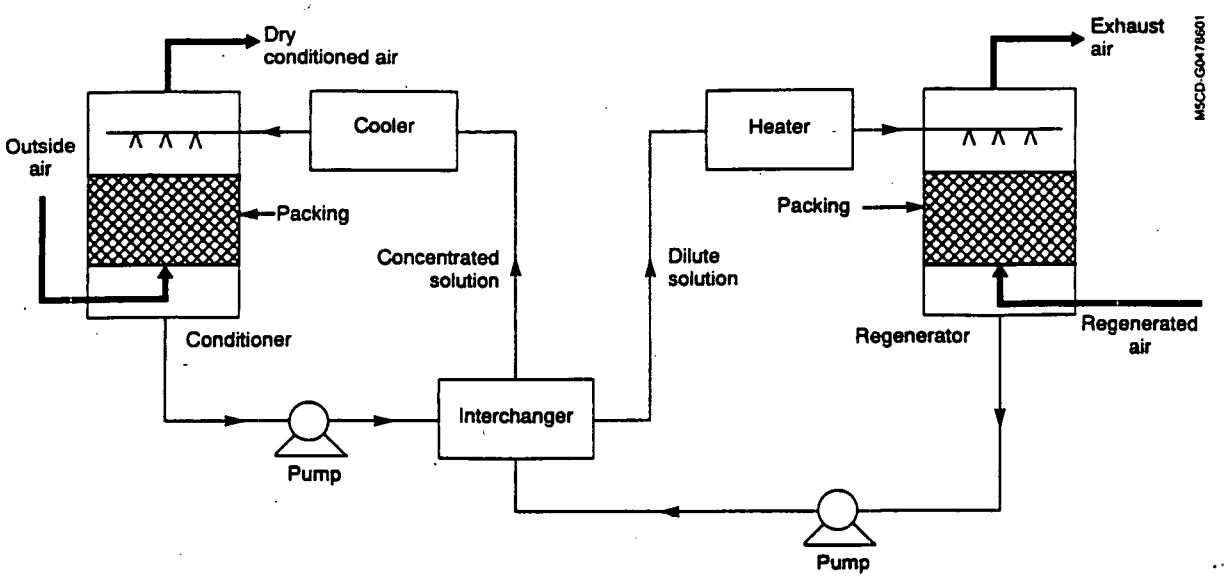

Figure 5-9. Example of a liquid desiccant cooling system

Griffiths (1979) and Robison (1982) have proposed the system configuration shown in Figure 5-10. Return air from the conditioned space (1) contacts concentrated liquid desiccant solution in the absorber and is dehumidified. Simultaneously, the heat of absorption and possibly some sensible heat is rejected to the heat sink. This dried and cooled air (2) is then evaporatively cooled (3) and delivered to the conditioned space. During periods of favorable insolation, weak solution is pumped from storage and heated in the collector. Ambient air (6) is then contacted with the solution, removing moisture (7) and concentrating the solution.

Robison (1982) proposed using a thin-film, open-flow collector for the collector and regenerator as shown in Figure 5-11. A complete system using this concept was designed and installed in a test house.

A counterflow packed tower was used as the absorber, and well water was used as the heat sink. The collector/regenerator was constructed of plywood coated with neoprene liquid roofing material and covered with low-iron glass. Calcium chloride solution was used as the desiccant. The system was operated for two cooling seasons. The average ratio of cooling supplied to incident solar energy was 0.6, and the electric COP was 2.9 (Robison and Harris, 1982). Several problems occurred with the roofing materials, insulation, and storage tanks, but overall the performance was satisfactory (Robison 1983).

Turner (1979) and Peng and Howell (1981) have proposed a system configuration similar to Griffith's in which part of the airstream leaving the absorber is used in a packed cooling tower to produce the cooling water for the absorber. Ambient air is taken in with the recirculated room air to maintain the mass balance. Peng and Howell (1981) have proposed using recirculated room air to produce the absorber cooling water. Numerical analysis of these systems shows thermal COPs on the order of 0.5.

Ullah (1986) has investigated liquid desiccant system regeneration in an open-flow solar collector. The average seasonal thermal COP was predicted to be approximately 2.0 for a cooling season from April through October for Houston, TX.

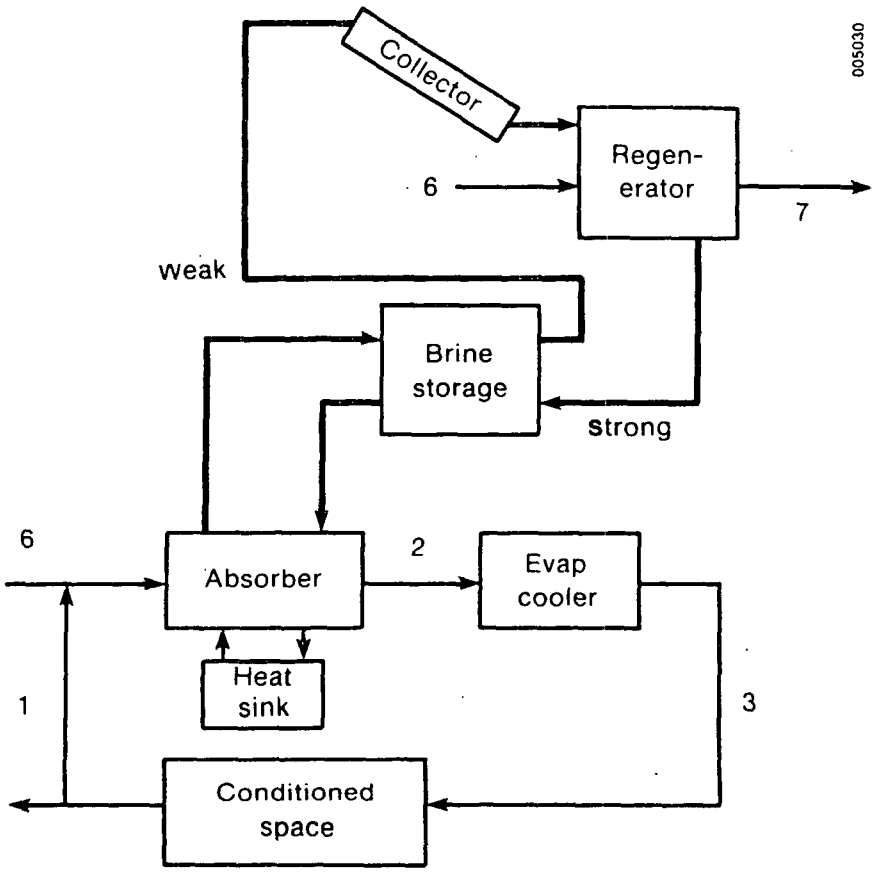

Figure 5-10. Liquid desiccant cooling system proposed by Griffiths

The two most important components in liquid desiccant cooling systems are the absorber and the regenerator. The absorber has received less attention. Turner (1979) proposed using a finned-tube surface in which desiccant solution is sprayed over fins and air is blown through the fin passages. Cooling water is then pumped through the tubes. The absorber installed in Robinson's system (1982) consisted of a packed column rather than fins. This was an adaptation of the current technology in commercial liquid desiccant drying systems.

In Griffith's system, a packed column is also proposed for the regenerator with the solar collector preheating the desiccant solution. These functions can be combined by using an open-flow collector in which the desiccant solution flows over the collector surface in a thin film in direct contact with the ambient air (Figure 5-11). Unglazed collector/regenerators have been built and tested in both dry (Wood et al., 1983) and humid (Grodzka et al., 1981; McCormick et al., 1983) climates. Both collectors were constructed on conventional asphalt shingled roofs with some precautions taken to protect against corrosion by the desiccant solution. This results in a very inexpensive collector. Satisfactory operation of the collector/regenerators was obtained with only minor problems because of contamination by dust, bugs, and birds.

The major problem encountered was rain. The desiccant was either diluted (if rain was collected to save the desiccant washed from the roof) or lost (if rain was drained away). Wood and coworkers at Arizona State University (Wood, 1982; Wood et al., 1984) have been investigating the heat- and mass-transfer characteristics of liquid desiccant open-flow collectors. Adding glazing has been recommended to reduce the problems caused by rain and contamination, which Robison (1982) did in constructing his collector.

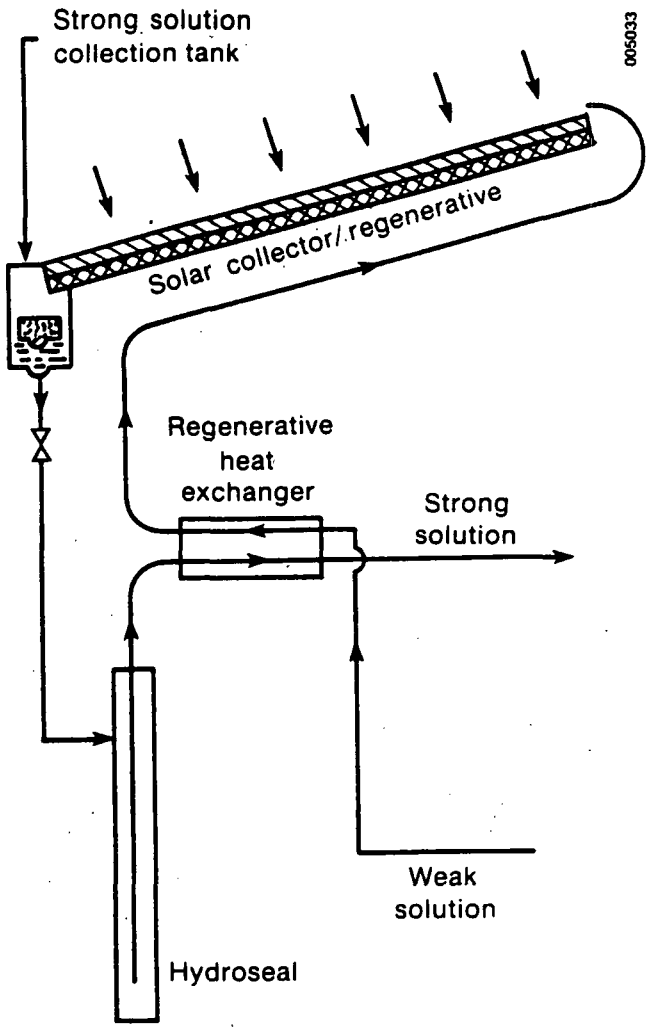

Figure 5-11. Thin-film, open-flow collector proposed by Robison

Adding the glazing may cause materials problems because of the higher temperatures involved. Recently Wood at Arizona State University has initiated an experimental program to determine the effect of glazing on a collector/regenerator.

Colorado State University (CSU) researchers have investigated and field tested a system that employs commercially available dehumidifying equipment using triethylene glycols as a desiccant and a sprayed coiled type dehumidifier regenerator performance (Lenz et al., 1987; Löf et al., 1981). Solar heat was used to regenerate the desiccant. CSU has also been involved in improving the heat- and mass-transfer rate of liquid desiccant systems in packed columns.

Patnaik et al. (1988) and Chen et al. (1989) have studied the effects of liquid desiccant properties on the dehumidification rate. Their results can be used to identify operating conditions that should be maintained to achieve maximum COP.

Ertas et al. (1990) have studied the effect of combining lithium chloride and calcium chloride solutions. This combination is currently being tested in a desiccant-regenerator loop at Texas Tech University. University of Texas at Austin researchers (Studak and Peterson, 1988) compared and ranked the properties

of existing liquid desiccants for use in desiccant dehumidification for buildings. Calcium chloride was suggested to be the best liquid desiccant for the anticipated application.

Albers Air Conditioning Corporation (Albers et al., 1991) has developed a prototype liquid desiccant air conditioner that should be commercially available in 1993. In this air conditioner, concentrated lithium bromide desiccant solution is sprayed into a process airstream to be dried through a heat exchanger. The dry air stream passes through a water spray to lower its temperature and adjust humidity before entering the conditioner space. Exhaust air stream is then cooled by sprayed water, enabling the air to draw heat from intake air via the heat exchanger. After absorbing moisture from the incoming airstream, the diluted lithium bromide flows to a regenerator, where it is heated enough to evaporate extra moisture. Natural gas is used to regenerate the desiccant. British Gas of London is financing the manufacturing and commercialization of this liquid desiccant air conditioner.

Recently, AIL Research, Inc., under funding from GRI, has investigated the improvements in performance of absorber (Lowenstein and Gabruk, 1992) and regenerator (Lowenstein and Dean, 1992) for an open-cycle liquid desiccant cooling system. Lowenstein and Gabruk (1992) modeled a liquid desiccant air conditioner with adiabatic and internally cooled absorbers using a single-effect boiler/regenerator. At desiccant flow rates that are approximately an order of magnitude less than those of current practices, the thermal COP of the liquid desiccant air conditioner increases by 25%. Lowenstein and Dean (1992) modeled the performance of a lithium chloride liquid desiccant air conditioner with the following four types of regenerators: (1) air-dried, packed-bed units, (2) simple boilers, (3) multiple-effect boilers, and (4) engine-driven, vapor compression distillation units. For all systems, the absorber was a counter flow adiabatic packed-bed unit. At ARI conditions, the regenerators produced the following thermal COPs: (1) packed bed: 0.69 at 116°C desiccant spray temperature, (2) simple boiler: 0.79 for subatmosphere boiler with pressure of 11.7 kPa (an 18% increase over atmospheric boiler), (3) multiple effect boiler: 1.36 and 1.89 for double-effect and triple-effect units with subatmospheric pressure of 11.7 kPa, and (4) engine-driven vapor-compression distillation: 2.4. The increase in COP is achieved by an increase in the complexity of the components and added hardware. Economic trade-offs between increased COP and increased initial cost should be made to arrive at a cost-effective system. From the above two studies, it is concluded that using advanced regeneration methods can result in higher improvements in COP of a liquid desiccant air conditioner than using advanced absorber designs.

Other than those sold by Kathabar Systems and Niagara Blowers, no stand-alone liquid desiccant cooling system is commercially available. A number of liquid desiccant dehumidifier/regenerator prototypes are being developed for hybrid or integrated desiccant cooling systems. New liquid desiccant materials with desirable properties should be developed for improving the perceived image of liquid desiccant cooling systems.

5.4 Hybrid and Integrated Desiccant Cooling Systems

Conventional vapor compression systems are very good at providing sensible cooling. To generate a latent cooling capacity, however, they must cool the air past the dew point to condense and remove the excess moisture as shown in Figure 5-12a. Desiccant dehumidifier cooling systems are very good at producing latent cooling but must over-dry the air so sufficient sensible and latent cooling capacity remains after the evaporative cooling process. A portion of the solid desiccant recirculation cycle process is shown in Figure 5-12b.

By combining a desiccant dehumidifier to meet the latent load and a vapor compression system to meet the sensible load, a very efficient system can be built. As shown in Figure 5-12c, the dehumidifier in the hybrid system is required to remove less moisture than in the desiccant system. This allows the desiccant

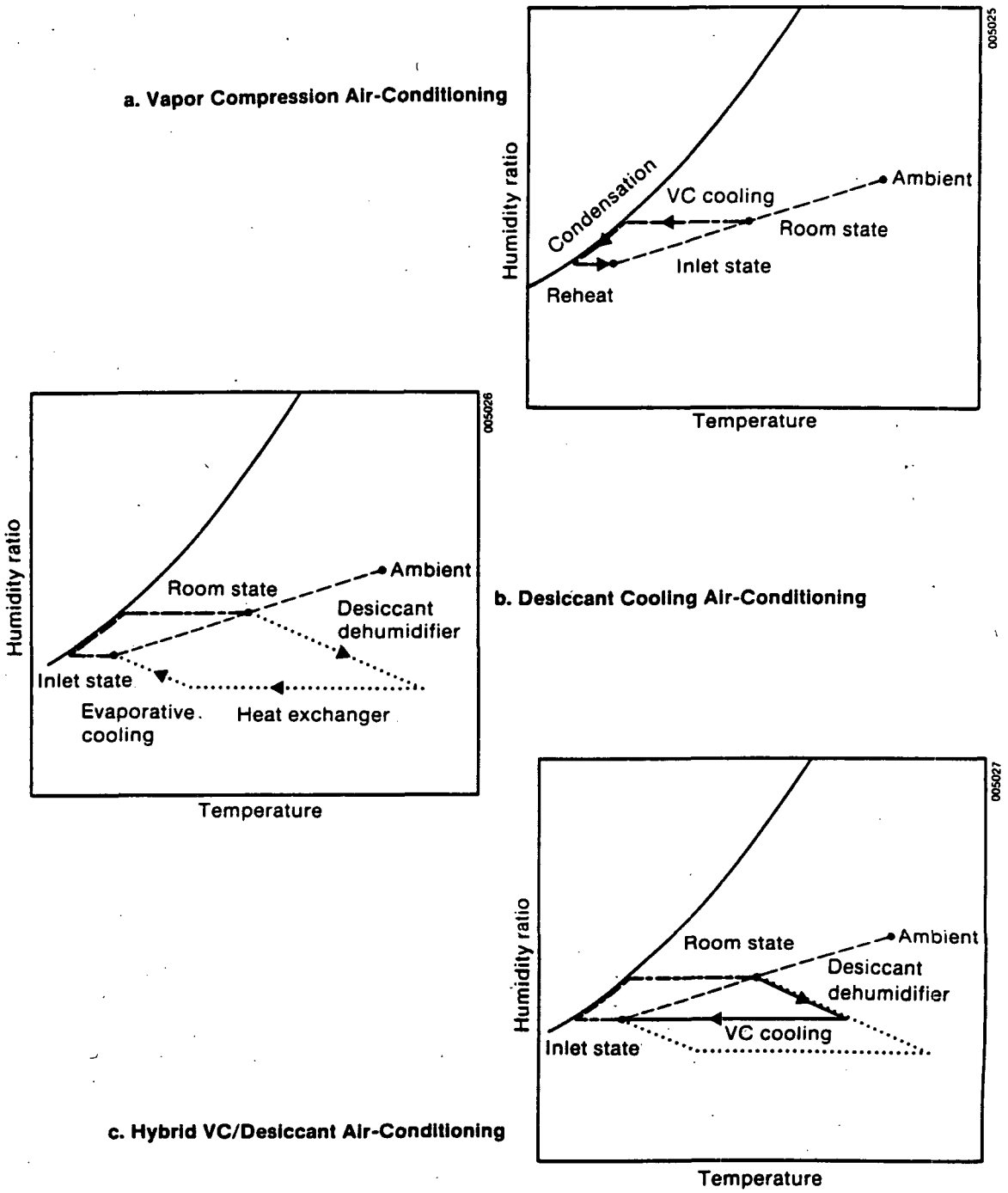

Figure 5-12. Psychometric representation of a) vapor compression, b) adiabatic desiccant dehumidifier, and c) hybrid system cooling processes

to be regenerated at a lower temperature; e.g., by using solar energy more efficiently. Also, waste heat can be used; e.g., from the condenser of the vapor compression unit, from a thermally activated heat pump, or from cogeneration systems. The vapor compression unit needs to handle only the sensible load, so a smaller unit may be used. Performance of the unit is also improved by operating at a higher evaporator temperature because it does not have to condense moisture. Most of the hybrid systems proposed to date have been for commercial applications.

In a supermarket or food store, much of the sensible cooling is provided by the freezer and refrigeration cases; however, additional dehumidification is often required. By using a desiccant dehumidifier to remove this moisture, the size of the vapor compression unit and the electrical power consumed can be substantially reduced. Additionally, the freezer and refrigeration cases can be operated more efficiently because of reduced frost buildup.

A cooperative effort among Thermoelectron, GRI, and Jewel Supermarkets has resulted in the installation of a hybrid system in a Jewell store (Cohen et al., 1983). The simple configuration of components shown in Figure 5-13 is used in the store. An adiabatic silica gel dehumidifier is used to dry ambient ventilation air. After passing through a heat exchanger to remove a portion of the heat of adsorption, the air is mixed with recirculated store air and sensibly cooled by the air conditioner to the required inlet temperature. Many problems were encountered during the first year of operation, yet definite indications of reduced energy use and economic viability were obtained. Optimization of system performance and control remain to be made as the study continues.

A similar system called SuperAire™ has been developed and tested by Cargocaire in two supermarket chains (Bowlen and Kosar, 1989; Manley et al., 1985). In this system the mixed recirculation airstream is dehumidified. The unit has a gas-fired lithium chloride dehumidifier wheel, indirect evaporative cooling, and a down-sized electric air conditioner. Field tests have shown that the combined energy cost of the refrigeration and air conditioning of supermarkets can be reduced by 7% to 14%.

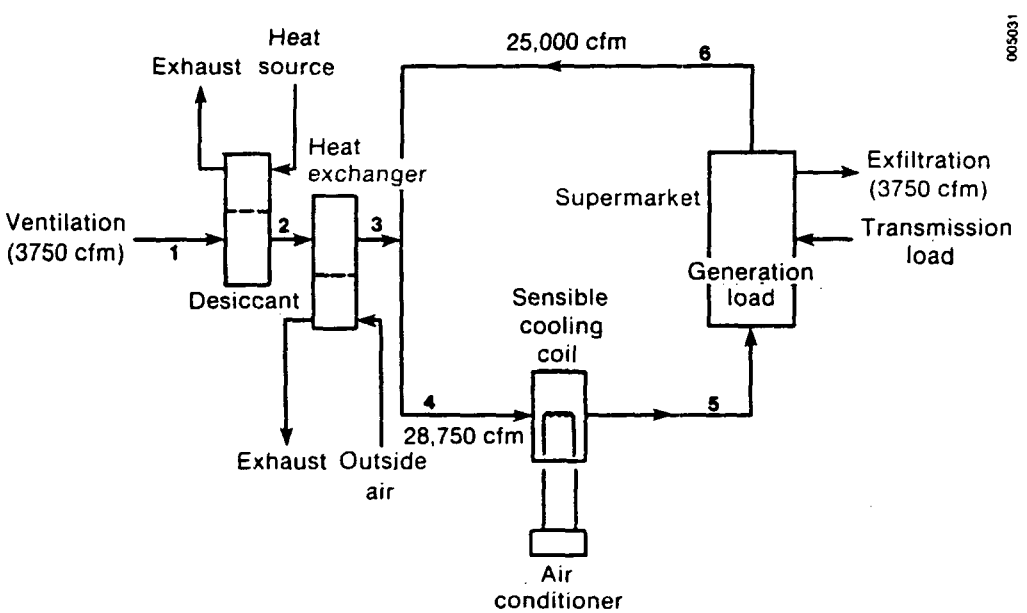

Figure 5-13. Desiccant cooling system used in a supermarket

Integrated systems can also use liquid desiccant dehumidifiers. Gershon Meckler and Associates have designed and installed the system shown in Figure 5-14 in a Veterans Administration hospital (Meckler, 1986). Outside ventilation air is dried by a lithium chloride solution (with external cooling) and passed on to the vapor compression unit. The solution is regenerated by heating it with solar energy or recovered waste heat and subsequent contact with a heated airstream. This hybrid system reduced building cooling costs by 30%. Gershon Meckler and Associates have applied different variations of this concept to various types of buildings such as a courthouse, a museum, and office buildings. In some of these applications, natural gas has provided supplemental heat for regenerating desiccants.

Current desiccant system installations tend to be somewhat specialized because of cooling requirements and favorable economics. Analytical studies of a hybrid system for general small office building applications have been done by University of Wisconsin–Madison (Sheridan and Mitchell, 1985; Howe et al., 1983). The system has an adiabatic silica gel dehumidifier and is shown in Figure 5-15. Room air (1) is mixed with the required amount of ventilation air (6) and dehumidified (3). The air is then cooled (4) to near the ambient wet-bulb temperature (9) in an indirect evaporative cooler. This removes much of the cooling load from the vapor compression unit and is thermally "free" cooling. The dehumidifier is regenerated using combinations of solar energy, condenser waste heat, and auxiliary energy. Simulations of this hybrid system show that resource energy consumption can be reduced to 35%-55% from the standard vapor compression system (Howe et al., 1983). The reduction depends significantly on how much cooling can be obtained from the indirect evaporative cooler. The indirect evaporative cooler is very effective in dry climates, and therefore energy savings can be large. However, the indirect evaporative cooler may provide too much sensible cooling. In this case, insufficient heat would be rejected from the condenser to fully regenerate the dehumidifier, requiring auxiliary energy input.

Milton Meckler of the Meckler Energy Group (Meckler, 1989) has proposed a hybrid cogeneration cooling cycle that incorporates packaged cogenerated electrical power with a solar powered Rankine cycle and a means of utilizing the heat rejected at the condenser to regenerate the desiccant. A case study was done on a representative building, and it was found that this system decreases the energy consumption by 12% as compared to a conventional HVAC system.

Gershon Meckler (1989) has developed a two-stage solid desiccant dehumidification system that integrates with the HVAC system of commercial buildings. The first stage is a desiccant-impregnated enthalpy exchange wheel that accomplishes 30% to 50% of the dehumidification task without addition of external heat or regeneration. The second stage is a desiccant dehumidifier wheel that accomplishes the remainder of the dehumidification task with addition of external heat for regeneration. The thermal COP of the two-stage dehumidification system is expected to be lower than the single-stage system. This system can be applied to office building/shopping centers, supermarkets, restaurants, and nursing homes. Kathabar Systems, under funding from GRI (Novosel and Griffiths, 1989), has developed a gas-fired desiccant humidity pump to supplement electrically driven refrigeration equipment. A schematic of the humidity pump is shown in Figure 5-16. It is designed as a make-up air system coupled to a new or existing conventional air conditioning system via a duct. It consists of a gas-fired regenerator with an air-to-heat exchanger to recover the heat of regeneration. It incorporates an evaporative cooler to reduce the temperature of the make-up air. The make-up air is passed through the liquid desiccant conditioner, where the moisture is absorbed by the concentrated desiccant solution, and its temperature is reduced by the scavenging airstream that has been cooled in an evaporative cooler. This dehumidified and cooled air is then passed on to the conventional system for sensible cooling. Novosel and Griffiths (1989) have predicted a COP of 0.71 based on cooling outside air at ARI standard conditions to 89.7°F and 50 grains

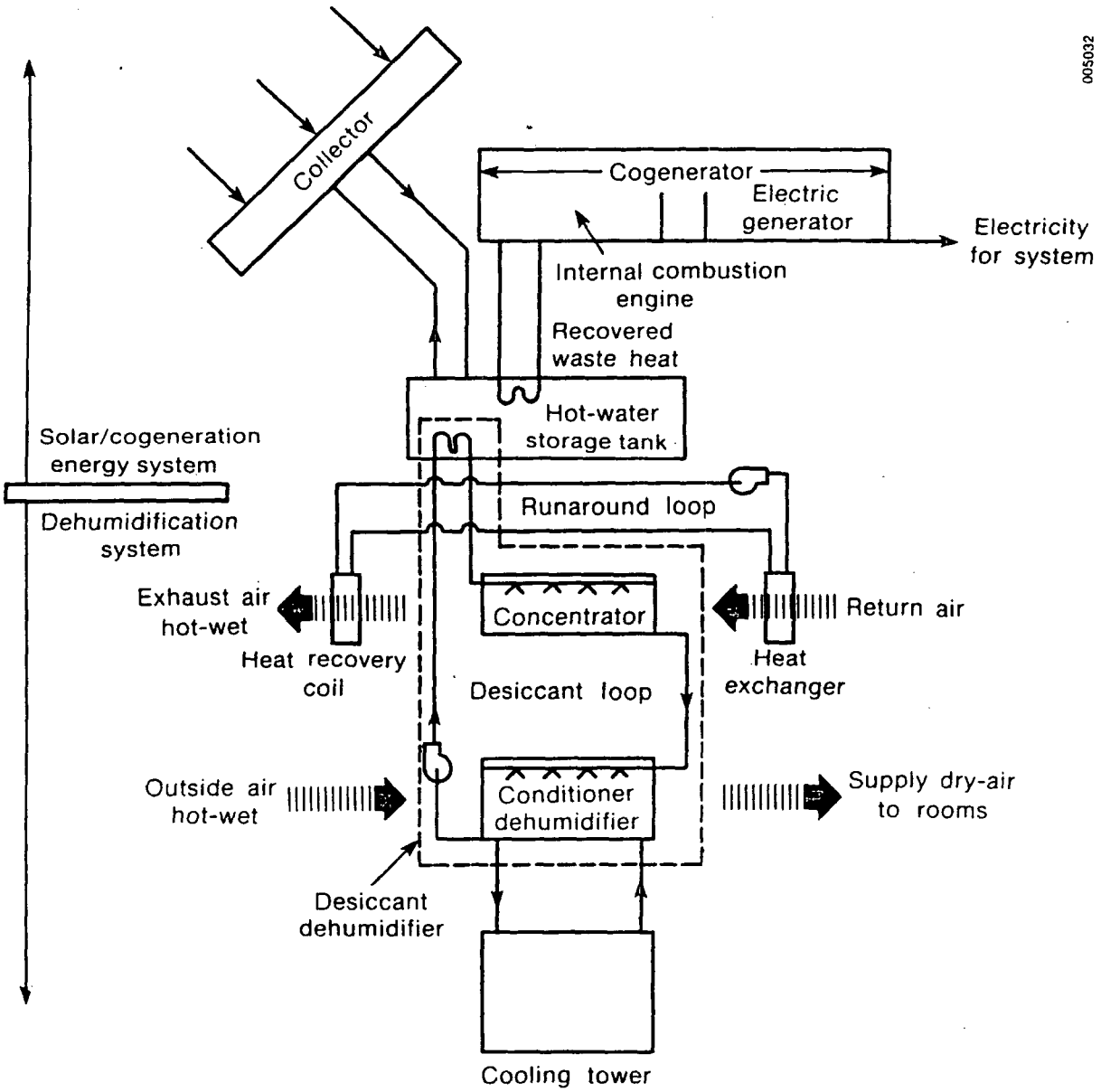

Figure 5-14. Hybrid liquid desiccant system used in a hospital

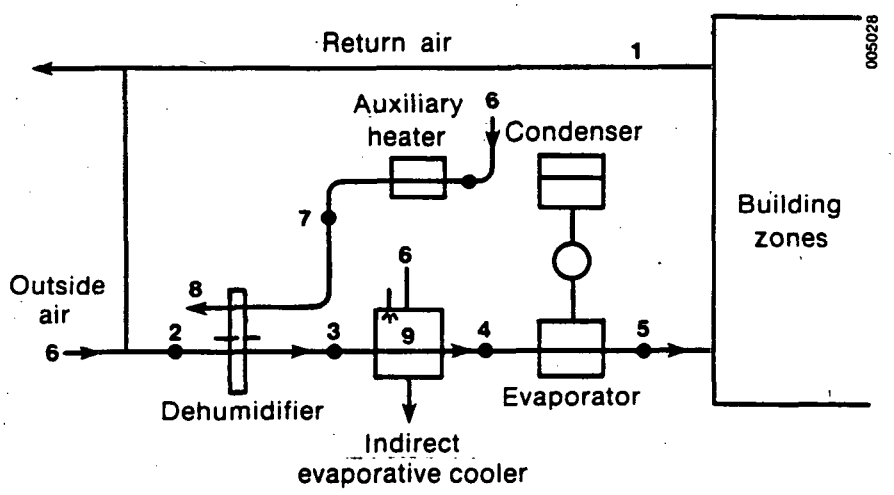

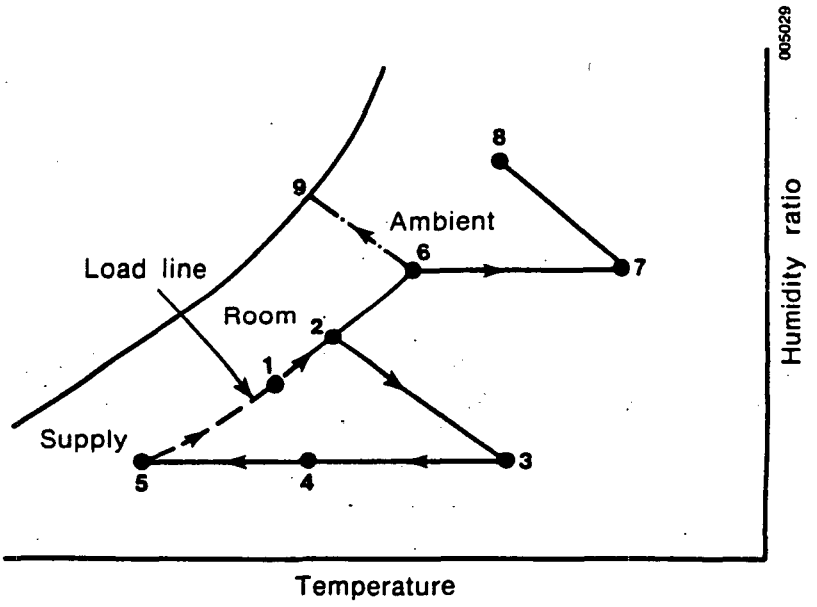

Figure 5-15. Hybrid system for small general office buildings

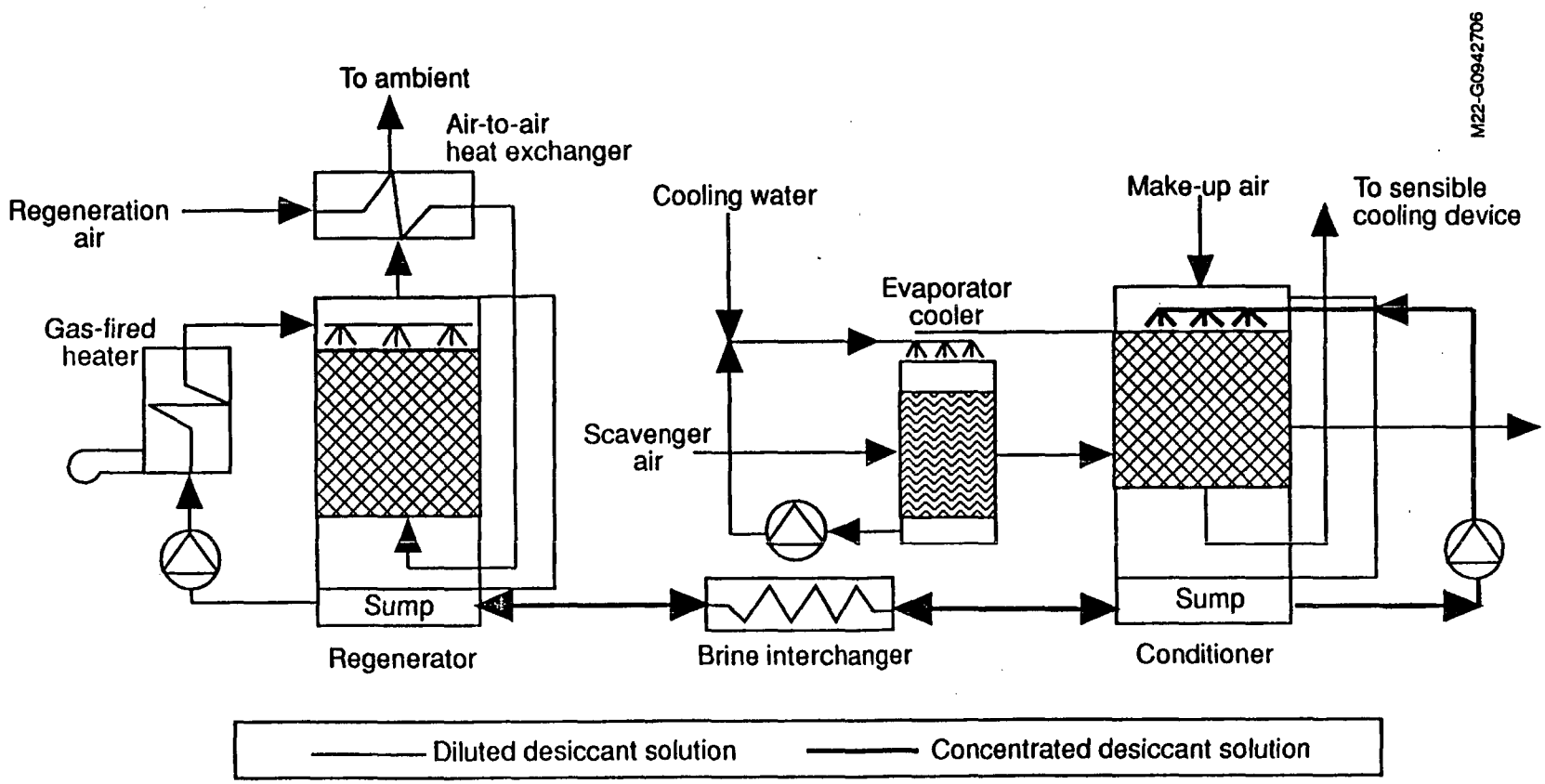

Figure 5-16. Schematic of the humidity pump

moisture/lb air. They have also predicted an increase in COP of about 14% (from 1.4 to 1.6) when a gas-engine-driven chiller is integrated with a humidity pump. The system is developed for a commercial rooftop cooling (20-100 ton) system.

The concept of a desiccant-enhanced air conditioner (DEAC) has been patented by Cromer (1988) of Florida Solar Energy Center (FSEC) to improve the performance of a vapor compression refrigeration air conditioner by adding a desiccant dehumidifier. In this concept, a desiccant dehumidifier removes the moisture from the saturated cold air leaving the evaporator coil, lowering its humidity and increasing its temperature by adding heat of sorption. As a result, there is no need for reheat. The desiccant is regenerated by the warm return air from the building. Desiccants capable of being regenerated at low temperatures (55°C) are needed for this concept. Under DOE funding, FSEC is currently performing a simulation study comparing energy use for a variety of cooling/dehumidification systems (including DEAC), operating in three different climates and three different building types.

Milton Meckler and Tecogen, Inc., with funding from GRI, have started evaluating the practical application and the economic viability of a liquid desiccant energy storage system that utilizes prime mover waste heat; i.e., gas engine chiller, cogenerators, etc.

Tecogen, Inc. and Kathabar Systems, under funding from GRI (Ryan et al., 1989) have developed and tested a residential gas-fired dehumidifier using an aqueous lithium chloride desiccant. This system (Figure 5-17) uses a direct evaporative cooler, a boiler regenerator, a liquid desiccant conditioner, and an interchange heat exchanger. The water is removed from the desiccant directly by boiling. Therefore, a large mass of air need not be heated, and the physical size of the desiccant unit is reduced. The indoorreturn air is dehumidified in a flat-plate heat exchanger. The interchange heat exchanger transfers the heat from the hot regenerated desiccant leaving the boiler to the cool dilute desiccant leaving the conditioner, thus resulting in energy savings. This system delivered 1 ton of dehumidification with the supply air within 4°F of the return air. The average COP of this unit calculated over the test period was 0.5. An economic analysis compared this desiccant system to a state-of-the-art vapor compression system coupled with an electric dehumidifier. The lower operating cost of the desiccant system resulted in pay-back periods of around 2 years with the additional advantage of cleaner indoor air. This system will be further developed for commercialization by Bacchus Industries.

A number of investigators have proposed using desiccant systems in conjunction with conventional HVAC equipment to produce a cold-air distribution system. For example, M. Meckler (1989) has used a liquid dehumidification system and G. Meckler (1990) has used a two-stage solid dehumidification system combined with chillers to produce cold air. M. Meckler has predicted that the desiccant cold air system provides a cost-effective alterative to a 40°F all-air thermal storage system and a conventional all-air variable air volume (VAV) system.

Several investigators have studied combining a desiccant dehumidification system with a thermally activated heat pump. Turner and coworkers (Turner et al., 1988) at the University of Nevada have compared the economics of operation of various heat-pump desiccant-wheel configurations driven by a natural gas internal combustion engine. The engine exhaust heat is used to supply part of the regeneration energy for the desiccant unit. Mathematical modeling predicted that the operating cost of these systems is less than an all-electric heat pump for eight different U.S. cities located in climates ranging from hot and humid to hot and dry to moderate summer conditions.

Parsons et al. (1989) at NREL studied two configurations for coupling a desiccant dehumidification system to a gas-engine-driven heat pump. They studied molecular sieves, lithium chloride, and silicagel dehumidifiers for coupling with the heat pump and found that silica gel provided the best performance.

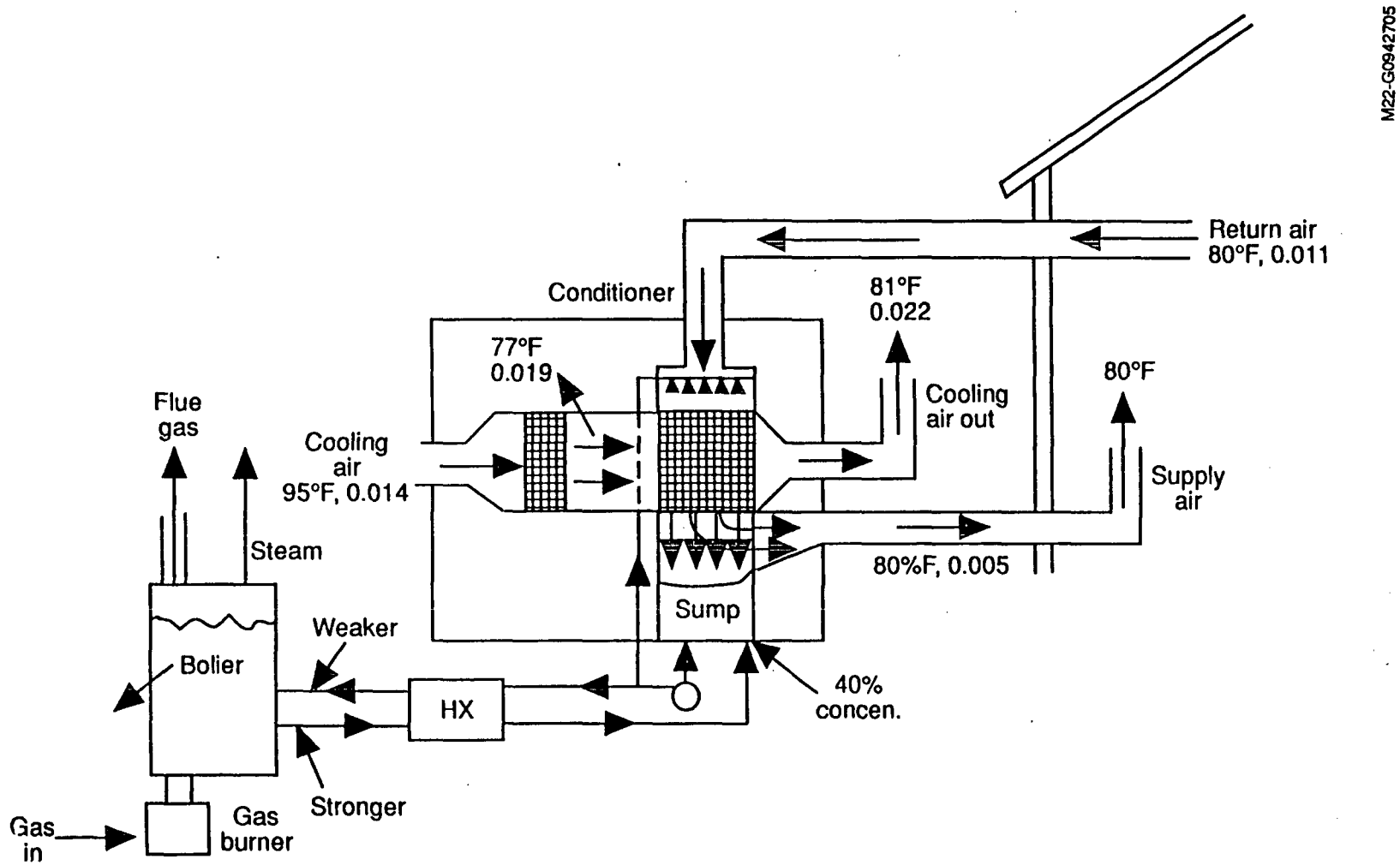

Figure 5-17. Residential dehumidifier using aqueous lithium chloride

They found that adding the desiccant system increased the gas-based coefficient of performance by 40% and increased the cooling capacity 50% without increasing per-ton cost of the system.

Maclaine-cross and coworkers (Smith, 1990; Kang 1990) at the University of New South Wales in Australia have studied a gas engine desiccant hybrid air conditioning system for retrofit applications. The major components of the system are a regenerative dehumidifier with layered silica gel/zeolite desiccant matrices and a gas-engine-powered chiller. Waste heat from the engine regenerates the desiccant unit. Using this system for a commercial building in Sydney, Australia, the pay-back period was estimated to be about 2 years, assuming availability of cost-effective dehumidifiers.

With funding from GRI, Battelle Columbus Laboratories (Saunders et al., 1989; Wilkinson, 1991) have developed a new concept called the DUBLSORB system that incorporates a conventional liquid desiccant unit with a conventional absorption chiller. The heat rejected from the chiller condenser is used to regenerate the desiccant with supplemental regeneration energy being provided by an auxiliary gas-fired burner. This system uses a cooling tower to cool both the chiller absorber and the desiccant dehumidifier. Because the chiller has to meet only the sensible load, it is smaller than a conventional chiller. In an economic analysis, Saunders et al. (1989), have shown that the pay-back period is less than 3 years when compared to a conventional electric chiller with reheat. The mathematical modeling of the system has resulted in COP values of around 0.9 to 1.2 depending on the indoor humidity ratio (outdoor conditions were near standard ARI conditions).

Howell and Peterson (1991) have proposed an all-electric hybrid vapor compression/liquid desiccant air conditioner for building applications. Liquid desiccant is sprayed in air over the condenser or evaporator coils, for heat and moisture transfer. During periods of peak electric demand, which coincide with hot and moderately humid ambient conditions in Texas, the hybrid system is operated as a conventional air conditioner; i.e., water vapor is condensed rather than sorbed. In this mode, the condensate is carried in solution and recirculated over the condenser, lowering condensing temperature as it is evaporated. In effect, the condenser operates as an evaporative condenser without the problems of biological fouling and scaling; triethylene glycol solutions are biostatic and contain no scale-producing chemicals. During off-peak periods, which coincide with cool and extremely humid ambient conditions in Texas, the system is operated as a desiccant dehumidifier, with desiccant solution recirculated between and through both evaporator and condenser. Consequently, the system provides for both improved comfort and summer electric load leveling. An experimental prototype of this system will be tested in 1993 at the University of Texas at Austin.

Fairey and coworkers at the FSEC (Fairey et al., 1986; Swami et al., 1990) have developed and are studying a passive-solar cooling concept using a desiccant. This concept is called the "desiccant enhanced nocturnal radiation" (DESRAD) cooling and dehumidification system. The concept is a passive cooling approach and utilizes a desiccant bed integrated in the roof and a conventional vapor compression system to achieve both the latent and sensible cooling in hot and humid climates. This concept utilizes the capacity of household materials to store moisture and thermal energy during the day and the desiccant bed to remove moisture during the night. Sensible cooling is provided during the night, and the desiccant is regenerated during the day by solar heat.

The system basically operates in two modes as shown in Figure 5-18: the nighttime adsorption mode and the daytime desorption mode. During the night, room air is circulated to the desiccant bed on the roof where the moisture is removed. The heat of sorption is transferred to the atmosphere. After the air passes through the desiccant bed it is passed through an evaporative cooler to increase the humidity level and to further cool the air. This air is then passed into the room where it absorbs the heat and moisture from the room. During the day, the desiccant system is disconnected from the house and the desiccant is

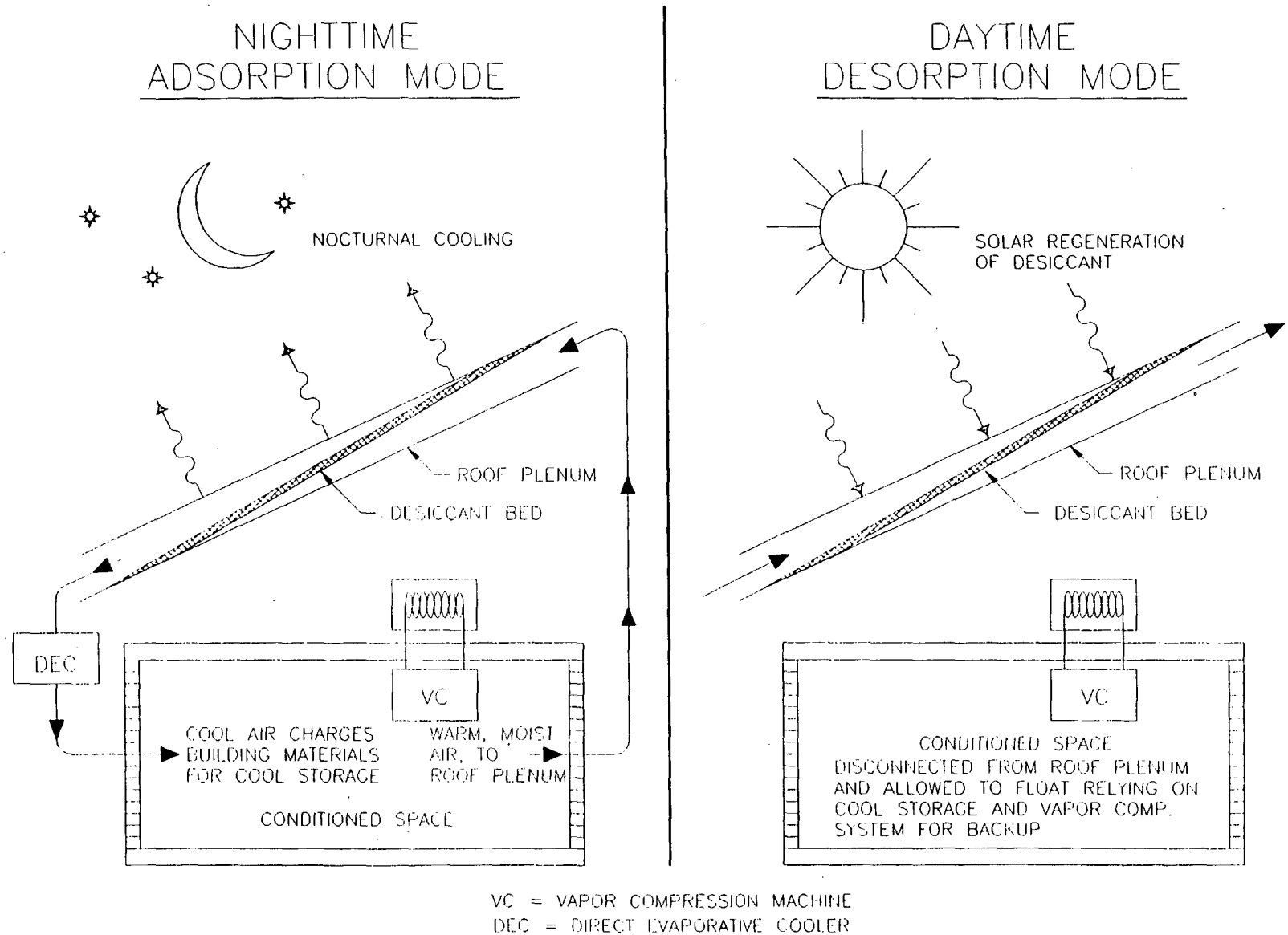

Figure 5-18. DESRAD system operating modes (Reprinted from Swami et al., 1990)

6.0 Models

Analytical tools have played a crucial role in the development of desiccant technologies. Basic property models were used to define the behavior of desiccants, fundamental heat- and mass-transfer models were used to explore potential improvements in the processes and components, and comprehensive systems and building models have supported the integration of technological improvements into present state-of-the-art systems.

As discussed by Howell et al. (1986), there is a hierarchy for developing analytical tools. The relationship among the several levels of analytical tools is illustrated in Figure 6-1. Properties and fundamental materials models are used in components models. The components models are used to develop system models that can interact with building energy analysis programs. There have been extensive modeling efforts for open-cycle solid and liquid desiccant components and systems. Less attention has been paid to closed-cycle desiccant systems. The developed models have been verified with experimental data with varying degrees of accuracy. Validated analytical models have been and continue to be important tools in guiding the R&D efforts. In this section, we briefly discuss available analytical tools.

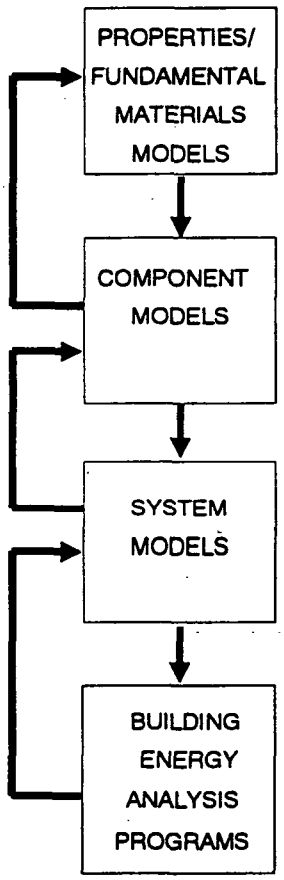

Figure 6-1. Model level hierarchy for desiccant cooling analysis

6.1 Solid Desiccant Components and Systems

Dehumidifier performance depends on many variables. The available regeneration temperature affects the choice of desiccant. The thermal properties of the supporting matrix affect dehumidifying capacity. The heat- and mass-transfer coefficients and the friction factor are determined by the matrix geometry. Dehumidifier performance can be improved by optimizing flow rate ratios and wheel rotation speed and by using purge streams. The effects of these variables can be conveniently determined by using detailed models of desiccant dehumidifiers. Preliminary decisions based on model results can greatly improve the effectiveness of a development or design program.

System performance depends on the interaction of the various components under the influence of changing ambient conditions and the cooling load. Design point calculations provide a preliminary estimate of performance on which the potential viability of a particular system concept can be judged. (Note that adequate component models are needed to do system design point calculations.) However, the competitiveness of a desiccant cooling system depends on its seasonal performance, which is difficult to deduce from design point data alone. Computer simulations of seasonal performance provide a more accurate estimate of system viability and the potential impact on the consumer and utilities in terms of energy and costs. System simulations are also a tool for investigating control strategies that maximize the thermal performance and minimize the parasitic power requirements of desiccant cooling systems.

6.1.1 Detailed models for desiccant dehumidifiers

Much of the potential for further increases in desiccant cooling system performance lies in the dehumidifier. Detailed models of the heat- and mass-transfer processes that occur in a dehumidifier can be used to judge the potential benefits of various materials and matrix geometries. Optimization of performance in terms of flow-rate ratios, rotation speed, and the desiccant/matrix thermodynamic properties is also easily accomplished with these models.

Finite difference techniques have been used by many researchers to obtain detailed models of dehumidifiers (e.g., Pla-Barby, 1978; Holmberg, 1979; Barker and Kettleborough, 1980; Mathiprakasam and Lavan, 1980; Pesaran and Mills, 1984). The finite difference program MOSHMX (Method of Solving Heat and Mass Xfer), developed by Maclaine-cross (1974), has been used extensively to model dehumidifier operation, including transient performance (Brandemuehl, 1982), purging (Jurinak and Mitchell, 1984), desiccant property effects (Collier, 1989; Jurinak and Mitchell, 1984), desiccant contamination effects (Pesaran, 1990) and optimization (Jurinak et al., 1984). In MOSHMX, a dehumidifier is described by five nondimensional parameters (a "number of transfer units" and a "mass capacity rate ratio" for each airstream and a "Lewis number"). Two step sizes in the time (rotation angle) coordinate are used, one to follow the initial rapid transfer wave and a second larger step to efficiently cover the rest of the period. Both a matrix technique and successive substitution are used to provide fast convergence to the periodic steady-state solution. To increase precision, the results of three successively smaller grid sizes are extrapolated to zero size, making use of the known second order accuracy of the difference equations. This increases the computation time excessively.

Pesaran and Mills (1987) have used the finite difference method to solve heat- and mass-transfer governing equations in a packed-bed dehumidifier by solving conservation equations both in gas phase and spherical solid particles. Charoensupaya and Worek (1988) solve the governing energy and mass conservation equations for a dehumidifier matrix consisting of parallel passages. Implicit finite difference schemes were used to solve governing equations both in the air and in the desiccant.

The program DESSIM (Barlow, 1982) was developed at NREL. In the original DESSIM procedure, the matrix is discretized and each node is treated as a counterflow heat and mass exchanger in which the mass transfer and heat transfer are assumed to be uncoupled. Although DESSIM's results agree relatively well with experimental data, the procedure is not fundamentally correct, and Schultz (1987) has shown that unless sufficiently small step sizes are used, inaccurate results may be obtained. This problem can be easily corrected by substituting a set of finite-difference equations derived from the partial differential equations into the numerical procedure.

DESSIM is a well documented program that is easy to follow and modify as needed. It is also a very flexible program providing a wide range of investigative options (e.g., Barlow and Collier, 1981; Collier, 1985; Schultz et al., 1985). In addition, the dehumidifier is described in terms of simple geometrical design parameters. These features make DESSIM an attractive analysis and design tool. Schultz and Mitchell (1989) have compared the DESSIM program with the more fundamental model MOSHMX and found that the predictions of DESSIM are within 5% of the predictions of MOSHMX under most conditions. Swami et al. (1989) have used a modified version of the DESSIM algorithm to model the performance of the DESRAD concept by incorporating intersurface radiation.

Enerscope and Tecogen Inc. (Collier and Cohen, 1988) developed a model based on the DESSIM program. This code (ET/DESSIM) has several improvements over the NREL/DESSIM. ET/DESSIM uses (1) parallel-flow operations rather than counter-flow, (2) vapor-pressure driving potentials in the mass exchanger rather than concentration driving potential, and (3) an additional iterative loop on the mass-transfer process. The ET/DESSIM model is more stable numerically and closer to physical reality than DESSIM models. Collier (1989) added the approach of MOSHMX for solving the heat- and mass-transfer in a dehumidifier node to the ET/DESSIM. This code, called DCSSMX, is more accurate than ET/DESSIM and is widely accepted and used for modeling solid rotary dehumidifiers. The results of various finite-difference models agree well with each other.

These codes (MOSHMS, DESSIM, and DCSSMX) have been validated, with varying degrees of accuracy, with experimental data (Barlow and Schlepp, 1982; Schultz, 1987; and Collier et al., 1989). Recently, Kang (1990) has modified MOSHMX to model the performance of a silica gel/zeolite, layered desiccant dehumidifier. A ventilation cycle using this dehumidifier performs slightly better than a cycle with a silica gel dehumidifier.

Several models have been developed for "ideal" dehumidifiers; that is, dehumidifiers in which the airstream and the matrix are in equilibrium at all times and locations (e.g., Epstein et al., 1985; Grolmes and Epstein, 1985). Van den Bulck et al. (1985) have solved the conservation equations for an equilibrium dehumidifier using a wave analysis that includes the effects of "shocks" (irreversible sharpening of the wave fronts). An analytical expression for dehumidifier performance results for the case of either complete regeneration or complete saturation during adsorption. Intermediate cases are found by interpolation. The model currently employs property correlations for a nominal silica gel dehumidifier.

Hajji et al. (1989) have numerically modeled the performance of a closed-cycle desiccant cooling system using a water vapor-zeolite pair. Equations governing the transport of the heat- and mass-transfer that occurs in the adsorption system are derived, and the performance is determined using finite and infinite transport coefficients.

6.1.2 Simplified models for desiccant dehumidifiers

As noted previously, detailed models of dehumidifiers are valuable tools in desiccant cooling research. However, their computational complexity limits their application in systems studies to parametric and

design-point calculations. Efficient hour-by-hour simulations of desiccant cooling systems have been undertaken to estimate seasonal performance and investigate optimal control strategies; these simulations require simple, quickly computed models of the dehumidifier.

One method of obtaining a simple dehumidifier model is to correlate the results of a detailed model. Correlations of the outlet states of the dehumidifier can be made (Barker and Kettleborough, 1980) or the performance of a complete system that incorporates a detailed dehumidifier model can be correlated (Majumdar et al., 1982). Investigations using this technique are generally restricted to a particular dehumidifier and to a limited number of describing parameters, which are limited in range.

A simplified version of the so-called "*analogy method*" has been used extensively in system simulations. In the analogy method, the normal dependent variables of temperature and humidity ratio are transformed to two variables termed the F_1 and F_2 potentials (Banks, 1972). The outlet state is then determined by superposing F_1 and F_2 effectiveness, which is directly analogous to the heat exchanger effectiveness. The F_1 potentials are functions of the desiccant/matrix properties. In the simplified version, the F_1 potentials are represented as nonlinear analytic functions of the temperature and humidity ratio for a particular desiccant; to date, this has only been done for silica gel and lithium chloride dehumidifier. Many organizations (e.g., University of Wisconsin–Madison, NREL, University of Nevada–Reno, etc.) have used this method in their analysis.

Van den Bulck et al. (1985), have defined an enthalpy and a humidity ratio effectiveness based on their ideal model. They have correlated these in terms of inlet conditions and operating parameters (NTUs and capacity rate ratios) for a silica gel dehumidifier. While the functional form of the effectiveness correlations is more concise than the direct correlation of outlet states, this method is currently applicable only to a matrix composed entirely of silica gel.

Confidence in system simulation results requires confidence in the models used. The analogy method has been shown to agree sufficiently well with MOSHMX for silica gel and simulation purposes (Jurinak, 1982). Van den Bulck's effectiveness model was generated using MOSHMX results. The level of confidence of these simplified models, as well as the correlation models, depends on the confidence level of the detailed models. This provides further justification for experimental validation efforts.

6.1.3 Other component models

Simulation of desiccant cooling systems requires quickly computed models of the other components that make up the system such as heat exchangers, evaporative coolers, and vapor compression equipment. Heat exchangers are conveniently modeled using the ε-NTU concept (Kays and London, 1984).[13] Typically, the use of a constant effectiveness is satisfactory for system simulations. However, for systems in which flow rate modulation is used to control cooling capacity, it may be desirable to include the variation of effectiveness with NTU.

The ε-NTU concept can also be used to adequately model both direct and indirect evaporative coolers; again, constant values of effectiveness are usually satisfactory. Maclaine-cross and Banks (1981)[14] have

---

[13]Kays, W.M., and A.L. London, 1984, *Compact Heat Exchangers*, Third Edition, McGraw-Hill Book Company, New York, NY.

[14]Maclaine-cross, I.L., and P.J. Banks, 1981, "A General Theory of Wet Surface Heat Exchangers and Its Application to Regenerative Evaporative Cooling," *ASME Journal of Heat Transfer*, Vol. 103, pp. 579-585.

analyzed wet surface exchangers and have proposed a heat exchanger-cooling tower combination in which part of the air conditioned in the heat exchanger by the chilled water from the tower is used as the inlet cooling tower airstream. The advantage of this device is that, unlike evaporative coolers, the heat and moisture transfer processes become reversible for an ideal component. A model of this device based on the analysis of Maclaine-cross and Banks is computationally too extensive for direct use in system simulations. Crum (1986) has developed a simplified model in which the performance at the desired conditions is interpolated from a table of values generated by the more detailed model.

Models of vapor compression units are needed to simulate the performance of hybrid systems. In addition, simulation of vapor compression systems is important to provide information by which to judge the competitiveness of desiccant cooling systems. Jurinak (1982) used an interpolative routine based on manufacturer's data to simulate the performance of a residential heat pump. Howe (1983) used a non-linear regression fit of manufacturer's data to model a commercial-scale vapor compression system. In hybrid systems, nonstandard vapor compression unit operating conditions are encountered that may be beyond the range of the available data. Burns (1985) extrapolated vapor compression unit performance to high condensing temperatures using the functional dependence of the Carnot COP on condensing temperature.

The Florida Solar Energy Center has developed a computer model called FEMLAP (Kerestecioglu et al., 1990)[15] that uses a finite-element approach to the problem of heat- and mass-transfer in solids. This model has been integrated into the building energy analysis program FSEC 1-1 to predict moisture transport within the building structure. This model has not been used for solving any specific desiccant problem.

6.1.4 Systems models

Desiccant cooling system models are easily developed by appropriately connecting the various component models together. Simulations can then be run by driving the system with time-dependent forcing functions such as weather data. The program TRNSYS (TRaNsient SYstem Simulation, Klein et al., 1983)[16] provides a very flexible structure for doing this. TRNSYS contains models for solar collection/storage systems and building cooling loads along with routines for reading weather data and summarizing results. The modular nature of TRNSYS makes it convenient to consider a variety of component arrangements or replacement of one component model with another. The hour-by-hour nature of the simulation allows investigation of control strategies for responding to changing conditions and of the potential impact on the power utilities.

Jurinak et al. (1984) simulated the performance of the solar-assisted ventilation cycle for residential applications using TRNSYS. Several levels of the analogy method, along with MOSHMX, were used as dehumidifier models. Howe (1983) has simulated a desiccant/vapor compression hybrid system for a small office building. The simplified analogy method was used to model the dehumidifier. Standard TRNSYS models were used to model the building cooling loads. Burns (1985) has simulated the hybrid system at the Jewel supermarket in Chicago. The dehumidifier model used is a combination of the simplified analogy method and van den Bulck's effectiveness correlations. Crum (1986) has simulated a desiccant

---

[15]Kerestecioglu A.A., M.V. Swami, A.A. Kamel, *Theoretical and computational investigation of simultaneous heat and moisture transfer in buildings: "Effective penetration depth" theory*, ASHRAE Trans., Vol. 96, Part 1, pp. 447-454.

[16]Klein, S.A., et al., 1983, "TRNSYS—A Transient Simulation Program," University of Wisconsin—Madison, Engineering Experiment Station Report 38-12, Version 12.1, Madison, Wisconsin.

cooling system proposed by Maclaine-cross (1985), which incorporates a heat exchanger/cooling tower in place of an evaporative cooler.

The DESSIM program also models the performance of ventilation and recirculation desiccant cooling cycles (Barlow, 1982). Collier and Cohen (1988) and Collier et al. (1990) have modeled the ventilation and recirculation cycle using DCSSMX model. They have studied the effects of change in desiccant isotherm shape and staged regeneration. They have found that a dehumidifier containing Type 1M isotherm desiccant operating under staged regeneration conditions gives the highest COP. Smith (1990) and Kang (1990) working with Maclaine-cross have simulated the performance of a gas engine desiccant hybrid air conditioning system using a fast modified version of MOSHMX. The system was a silica gel/zeolite layered dehumidifier. For hourly analysis of a building using this hybrid system, a building simulation program called BUNYIP (Building Energy Investigation Program) developed in Australia was used.

Under funding from GRI, GARD of Chamberlain National in conjunction with Lawrence Berkeley Laboratory is incorporating models of desiccant cooling systems in the computer code of the DOE 2.1 building load and HVAC simulation program. In a similar effort, S.E.I. Associates of Boulder, Colorado, has incorporated several desiccant dehumidification systems in the Trane Company's energy and economic program TRACE (TRane Air Conditioning Economics). TRACE is an HVAC simulation program that has been designed by Trane to perform a variety of analyses including demonstrating the impact of both energy use and operating costs between common HVAC systems, and incorporating various energy efficient system equipment and control strategies.

6.2 Liquid Desiccant Components and Systems

6.2.1 Absorber

The most important component in a liquid desiccant system is the absorber, in which water vapor is removed from the humid air, and cooling may occur. Peng and Howell (1981), Queiroz et al. (1984) and Ameringer et al. (1983) provide analyses of this component, and the latter two give comparisons with experimental data for different absorber designs.

Adaptations of the packed-column technologies used in commercial liquid desiccant drying and other processes have been considered. Modeling of absorption in packed columns is well developed, but applying the general principles to specific configurations may not be as straightforward as desired; therefore, more effort may be needed in this area. Peng (1980) has developed a finite-difference model for a finned-tube absorber and has used this model to optimize absorber design. The model has not been checked against experimental data. Siebe and Wood (1983) have proposed a simplified two-parameter model of a generic absorber. It is useful for long-term simulations of system performance.

Queiroz et al. (1984) analyzed and performed experiments on a system similar to Peng's system in which the coolant flow was parallel rather than in counterflow to the airstream. Measured values of the isothermal and adiabatic mass-transfer coefficients, as a function of air and desiccant solution mass flow rates, absorber cross-section, and packing length (i.e., mass-transfer area per unit volume), were found to be equal within the experimental error.

Löf, Lenz, and coworkers (e.g., Patnaik et al., 1988) have analyzed and performed experiments on packed beds and various liquid desiccants (glycols, lithium chloride, and lithium bromide) for cooling and dehumidification purposes. Rigorous heat- and mass-transfer analyses have been carried out by Gandhidasan et al. (1986) for Raching rings and Berl Saddles packed beds using calcium chloride.

Ullah et al. (1988) have attempted to circumvent the computational complexity of finite-difference models by defining an effectiveness factor for moisture removal in a packed tower using calcium chloride as the desiccant. Stevens et al. (1989) have developed a computationally simple effectiveness model for packed-bed liquid-desiccant heat and mass exchangers. This effectiveness model has been used to evaluate two cooling systems using the TRNSYS simulation program.

6.2.2 Collector/regenerator

An analytical closed-form solution to the unglazed, thin-film, open-flow collector has been developed by Collier (1979). Several assumptions, including small evaporation rates, constant transfer coefficients and heat of absorption, and a particular mathematical form for the equilibrium relationship, were required to obtain the solution. Good agreement was obtained with available experimental data. Siebe and Wood (1983) and McCormick et al. (1983) have compared the predictions of Peng's model with experimental data and Collier's model and found good agreement. McCormick et al. (1983) found that the thermal capacitance of the roof can cause a transient effect not accounted for in the steady-state model, although daily average performance is predicted by the model.

The Collier and finite-difference models provide similar insight into collector performance. Although the finite-difference models are much easier to calculate than those of the solid desiccant dehumidifier, the Collier's model is faster and almost as accurate. For these reasons, Siebe and Wood (1983) used Collier's model for the unglazed collector in long-term simulations of system performance.

Robison (1982) presents a simplified model for a glazed, open-flow collector. The overall evaporation rate is calculated based on the arithmetic average of the inlet and outlet conditions. This model does not account for any temperature or concentration profiles in the solution or airstream over the length of the collector. No verification of the model is indicated.

Gandhidasan (1983) has derived the differential equation describing the water evaporation rate in a glazed open-flow collector with parallel flow between the solution film and the air. Constant transfer coefficients and heat of absorption were assumed as was a particular mathematical form of the equilibrium relationship. The equation is solved numerically. The model has been used to parametrically study the effect of ambient conditions, initial solution concentration, and insolation level on evaporation rates from the regenerator. The model has not been experimentally verified.

Howell and Shephard (1982) have developed a finite-difference model for a glazed collector with air and solution film in counterflow. An iterative solution is required to obtain steady-state performance. The air is assumed to be in turbulent flow and the thermal entry length is accounted for. A parametric analysis of the effects of inlet conditions, insolation, and flow rates on the concentration and temperature profiles in the regenerator has been done. Again, the model has not been verified against experimental data.

6.2.3 Systems

Similar to solid desiccant systems, liquid desiccant cooling system models have been developed by appropriately connecting the various component models together. The liquid system models have been connected with other building or HVAC programs such as DOE 2.1, TRNSYS, and TRACE.

6.3 Summary

A variety of tools exist for modeling desiccant cooling systems, both detailed and simplified. More attention has been given to open-cycle solid desiccants than to open-cycle liquid and closed-cycle solid

desiccant systems. These tools have significantly aided the analysis and development of competitive desiccant cooling systems, and they have greatly enhanced R&D programs. However, further efforts in the areas of experimental verification and model development are needed. Further experimental work is needed to ensure that the detailed dehumidifier models properly describe real dehumidifiers. More data on actual systems is needed to ensure that component interactions are being properly modeled and that simulation results are accurate. Currently, there appears to be a lack of simplified, fast models for dehumidifiers with desiccants other than silica gel. While system design-point studies can be used to choose an appropriate desiccant/matrix combination, simulation of the system requires a quickly computed model that incorporates the chosen properties. There is also much modeling work to be done in optimizing specific system operation and control. There is a need for fast and user-friendly computer models for general-purpose users, designers, and others who are not experts in the field of desiccant cooling.

7.0 Desiccant Cooling Potential: Energy Impact

7.1 Introduction

In previous sections, we discussed the advantages of desiccant cooling systems:

- They use no CFCs.
- They are appropriate for reducing electricity peak load through fuel switching.
- They improve indoor air quality.
- They conserve energy and can be operated using renewable form of energy (e.g., solar or waste heat).

In this section, we estimate the potential energy impact of using thermally driven desiccant cooling systems in place of conventional electric-driven cooling systems. This estimation of the energy impact is simplified and thus should be considered preliminary. However, it provides an order-of-magnitude estimate for the energy impact. The energy impact is estimated based on comparing the primary energy of conventional cooling systems and desiccant cooling systems. The comparisons are made based on the following assumptions:

- The primary energy consumption for electric-driven residential and commercial cooling is 1.73 and 2.24 quads[17] in 1990, respectively.[18]
- The primary energy is converted to electricity by a factor of 30%, i.e., each Btu of electricity is generated by 3.4 Btu of primary energy.
- The electrical COPs of conventional cooling systems are between 2.0 and 3.0 as suggested by Blue et al. (1979)[19]
- The market penetration of desiccant systems is 30% for residential buildings and 20% for commercial buildings, i.e., either 30% or 20% of existing conventional systems will be replaced with desiccant systems. For commercial applications, the desiccant system will be probably used for latent load removal and will be integrated with the existing HVAC systems.
- The electrical COP for desiccant cooling systems is taken to be 13.
- The thermal COPs of desiccant systems are taken as 1.0, 1.4, and 1.8. We are assuming that with recent and expected advances in desiccant technology these higher thermal COPs will be attained.

---

[17] 1 quad is 10^{15} Btu.

[18] Source: *Energy Consumption and Conservation Potential: Supporting Analysis for the National Energy Strategy*, Office of Energy and Markets and End Use, Energy Information Administration, SR/NES/90-02, December 1990.

[19] Blue, J.L., et al., *Building Energy Use Data Book*, ORNL-5552, 2nd ed., Oak Ridge National Laboratory, Oak Ridge, Tenn., December 1979.

7.2 Energy Impact

Table 7-1 shows the results of our energy impact calculations. With a conventional electric COP of 2 for residential buildings, about 0.127 to 0.265 quads of primary energy could be saved (i.e., between 7 to 15%) if 30% of conventional cooling systems are replaced with desiccant systems. The higher the thermal COP, the larger the savings in primary energy consumption. Table 7-1 shows that as the electric COP of the conventional system increases to 3, the primary energy consumption for the desiccant system with thermal COP of 1.0 is higher than the primary energy consumption of conventional systems. At thermal COPs of 1.4 and 1.8, the primary energy savings are 0.064 and 0.139 quads (4% and 8%) for residential buildings using conventional cooling systems with electric COPs of 3.0.

Table 7-1 also shows that savings of 5% to 10% for commercial buildings with conventional systems that have electric COPs of 2.0. For commercial buildings, the quad savings is between 2% and 5% with thermal COPs of 1.4 and 1.8, respectively, when the electric COP of conventional systems is 3.0. As can be seen from Table 7-1, desiccant systems can have a significant energy impact if high thermal COPs are achieved. In our opinion, desiccant systems are not likely to penetrate in the residential market in the near term because of their high cost, large size, and immaturity. In the near term, desiccant technology has more potential for growth in commercial buildings because the desiccant technology is more adaptable for commercial buildings, and these systems can be integrated with existing HVAC systems.

In our analysis we assumed that the alternative primary energy source is natural gas. If solar energy or waste heat is used for regenerating the desiccant, more energy savings can be realized. Using solar energy conserves energy and it is also an electric peak load reduction strategy. For example, the Tennessee Valley Authority[20] (TVA) has calculated that by using desiccant technology enormous energy and capital saving for the utility can be realized. Assuming load management using thermal storage, TVA estimated residential-sized desiccant air conditioners could shave or shift up to 4 kW per residence from the peak demand during the extreme peak hour of a hot summer afternoon. Up to 2 kW average peak demand reduction could be realized for the entire multihour daily peak period during the cooling season. Estimated market penetration in the year 2005 was projected using conservative assumptions. Using desiccant systems in approximately 300,000 residence, TVA could save 1100 megawatts of electricity or replace the need for one new nuclear power plant. When these projected residential savings are combined with the opportunities in the commercial market, the numbers can be staggering.

The waste heat from industrial processes is estimated to be between 6-7 quads with more than 80% at temperatures suitable for desiccant regeneration. If desiccant technology is applied to industrial dehumidification and cooling utilizing waste heat from industrial processes, tremendous amounts of energy could be saved.

7.3 Summary

A simplified energy impact analysis indicated that desiccant systems can save up to 15% and 10% in primary energy for residential and commercial buildings, respectively. The energy savings can be even higher if solar energy or waste heat is used for desiccant regeneration.

[20]Article by Chinnery in the *Proceedings of 1986 Desiccant Cooling and Dehumidification Opportunities for Buildings Workshop* (Penney 1989).

Table 7-1. Estimated Desiccant Cooling Annual Energy Impact (In Quad)

Column		Calculation	$COP_e = 2$						$COP_e = 3$					
			Residential			Commercial			Residential			Commercial		
A	Primary energy use (Quads)		1.73			2.24			1.73			2.24		
B	Electric energy consumption (Quads)	$A \times \eta$	0.519			0.672			0.519			0.672		
C	Cooling load of buildings (Quads)	$B \times COP_e$	1.038			1.344			1.038			1.344		
D	Market penetration		30%			20%			30%			20%		
E	Cooling load to be replaced by DCS (Quads)	$C \times D$	0.311			0.269			0.467			0.403		
F	Primary energy saved by not using conventional cooling system (Quads)	$A \times D$	**0.518**			**0.448**			**0.518**			**0.448**		
G	Electrical energy needed for running DCS (Quads)	$E/COP_{e,dcs}$	0.024			0.021			0.036			0.031		
H	Primary electrical energy need for running DCS (Quads)	$G \times \eta$	0.080			0.070			0.120			0.103		
			COP_t 1.0	COP_t 1.4	COP_t 1.8	COP_t 1.0	COP_t 1.4	COP_t 1.8	COP_t 1.0	COP_t 1.4	COP_t 1.8	COP_t 1.0	COP_t 1.4	COP_t 1.8
K	Primary thermal energy for DCS regeneration (Quads)	E/COP_t	0.311	0.222	0.173	0.269	0.192	0.149	0.407	0.334	0.257	0.403	0.288	0.224
L	Total primary energy for DCS (Quads)	K+H	**0.391**	**0.302**	**0.253**	**0.339**	**0.262**	**0.219**	**0.587**	**0.454**	**0.379**	**0.506**	**0.391**	**0.327**
M	Total saved energy for replacing conventional system by DCS (Quads)	F-L	**0.127**	**0.216**	**0.265**	**0.109**	**0.186**	**0.229**	**-0.069**	**0.064**	**0.139**	**-0.058**	**0.057**	**0.121**

Notes:

- DCS: desiccant cooling system
- COP_e: electrical COP for the conventional cooling system
- $COP_{e,dcs}$: electrical COP for the desiccant cooling system (= 13)
- η: conversion efficiency of primary energy to electricity (= 0.3)
- COP_t: thermal COP for DCS

8.0 Research and Development Needs

8.1 Scope

While significant progress has been made in efficiency and the cost effectiveness of desiccant cooling systems for air conditioning, commercially available systems and designs are available for special applications such as supermarkets and numerous other applications requiring low humidity. Improvements are necessary in the efficiency, cost, size, reliability, and life-expectancy of components and systems to penetrate the broader commercial air conditioning (A/C) market.

In our opinion, the critical performance and cost goals for successful penetration of desiccant cooling systems into this competitive market are:

- For open-cycle solid desiccant cooling systems: thermal COP of 1.3 or higher; electrical COP of 12 or higher; flow cooling capacity of 225 cfm/ton or lower; life expectancy of 15 years or more; compact size (slightly larger than conventional A/C equipment); cost competitive with conventional A/C equipment; reduction in the use of CFCs.

- For open-cycle liquid desiccant cooling systems: development of noncorrosive, low-vapor-pressure, efficient, and inexpensive liquid desiccant materials; thermal COP of 1 or higher; electrical COP of 8 or higher; life expectancy of 20 years or more; compact size; cost competitive with alternative technologies, reduction in the use of CFCs.

- For closed-cycle solid cooling systems: thermal COP of 1.3 or higher; electrical COP of 10 or higher; flow cooling capacity of 225 cfm/ton or lower; compact size (slightly larger than conventional A/C equipment); cost competitive with conventional A/C equipment; reduction in the use of CFCs.

- For hybrid and integrated desiccant cooling systems: cost-effective and reliable components to reduce life-cycle cost of the integrated system relative to the conventional A/C system; reduction in the use of CFCs.

Achieving these performance goals will require advances in materials, components, and systems. In this section, we have identified R&D needs. We have proposed a program to implement the R&D activities needed in another document[21].

It should be noted that a matured $40-50 million desiccant dehumidification industry exists in the United States that mostly services industrial applications. In recent years, the industry has been successful in implementing the technology for air conditioning of some institutional and commercial buildings. Future development and advancement of the technology may have profound impact on the commercialization of the technology for broader air conditioning markets. Depending on the industry's particular needs and strategy, better materials, components, or systems may need to be employed. The R&D needs identified here are based on argumentative discussions at various meetings we had with the leaders of the technology. We have summarized what could be done with sufficient resources. The R&D needs and the program plan have to be reviewed and revised annually to be responsive to the needs of the industry and users.

[21]Pesaran, A.A., 1992, *Research and Development Needs for Desiccant Cooling Technology, 1992-1997*, NREL/TP-4320-5182, Golden, CO: National Renewable Energy Laboratory.

8.2 Summary of Research and Development Needs

Based on the previous R&D activities, we have identified some future R&D needs for achieving cost-effective, high-performance, and reliable desiccant cooling systems.

8.2.1 Desiccant materials

- Fundamental research on water vapor/desiccant interactions for improving sorption behavior
- Synthesis of new materials or modification of existing ones for improving sorption performance and reducing cost
- Synthesis and/or preparation of composite desiccants
- Characterization of materials and development of models to predict equilibrium and dynamic performance
- Identification of optimum properties of liquid and solid desiccants for cooling and dehumidification for low-, medium-, and high-temperature applications
- Development of noncorrosive, low-vapor-pressure, and environmentally acceptable liquid desiccants with desirable sorption properties
- Determination of durability of new desiccants with regard to thermal cycling and exposure to contaminants
- Study of desiccants as air purifiers for improving indoor air quality.

8.2.2 Components

- Improving heat- and mass-transfer rate in solid and liquid desiccant dehumidifiers while keeping the pressure drops low
- Developing low-cost, high-performance, compact solid dehumidifiers
- Developing low-cost, high-performance, compact liquid dehumidifiers
- Developing high-effectiveness (>0.89), compact, low-cost heat exchangers
- Investigation of materials and methods for improving storage techniques for liquid desiccant cooling systems for peak-shifting application.
- Developing low-cost, high-performance, compact direct and indirect evaporative coolers
- Developing advanced liquid desiccant absorbers and regenerators for higher thermal COP
- Improving performance and reducing cost of regeneration equipment such as solar collectors, boilers, and other advanced regenerators

Appendix A

DOE/NREL Investments in Desiccant Test Equipment/Procedures

A considerable amount of test equipment is available in the United States and abroad for obtaining data on desiccant materials, components, and system performance. Most of the test equipment has been developed under funding from DOE, GRI, and utilities in the United States, and from government agencies in other countries. Manufacturers of desiccant dehumidification and cooling components and systems also have test equipment for evaluating the performance of their products. In this appendix we will focus on test equipment available at NREL.

A.1 NREL Desiccant Cooling Test Facilities: Full Spectrum Relationships

NREL, with funding from DOE, has developed a complimentary set of experimental facilities (Figure A-1) to evaluate new and promising desiccant materials and matrices, and to validate mathematical models. The facilities were designed to measure the important characteristics of desiccant materials, dehumidifier matrices, and components under conditions expected in the operation of thermally regenerated desiccant cooling systems.

The output from each facility is designed to be input for another facility and for validating analytical models. The observed results and validated models can be used to gather information on new test specimens. The sorption properties of a new desiccant are measured with the quartz crystal microbalance (QCM), a Sartorius beam microbalance, or the sorption test facility (STF) depending on its form and shape to be tested. The sorption properties of special interest are water vapor equilibrium isotherms, rates of moisture adsorption and desorption, cyclic stability, and diffusivity. An isotherm is desiccant moisture capacity as a function of relative humidity at a constant temperature and also contains information about maximum water capacity and capacity change between any two relative humidities, as well as hysteresis between adsorption and desorption.

After initial evaluation that a desiccant material is promising (based on its sorption properties), it is made into a dehumidifier matrix material. If the desiccant is bonded to or embedded in a support material for structural integrity, its sorption properties are measured in the STF again. When it is assessed that the matrix material (desiccant and support) is still a promising desiccant, a dehumidifier matrix is fabricated, and its pressure drop and heat- and mass-transfer characteristics are measured in the desiccant heat- and mass-transfer test facility (HMTF). The characterization includes obtaining the nondimensional pressure drop data (friction-factor × Reynolds number), heat- and mass-transfer Nusselt numbers, and dehumidification capability at various flow conditions. The experimental data can also be used to validate fundamental momentum and heat- and mass-transfer models for the matrix.

When it is determined that the dehumidifier matrix is promising and feasible to build, a prototype rotating dehumidifier component is built and tested in the HVAC equipment test facility (HVACTF), formerly the desiccant cyclic test facility. This facility evaluates the performance of a dehumidifier under real operating conditions. The moisture removal effectiveness of the dehumidifier and its pressure drop are measured at various regeneration and adsorption stream-flow conditions. The experimental data can be used to validate dehumidifier models. The HVACTF is not limited to rotary dehumidifiers. Other HVAC components, such as evaporative coolers, heat exchangers, heat pipes, cooling coils, etc., can be tested.

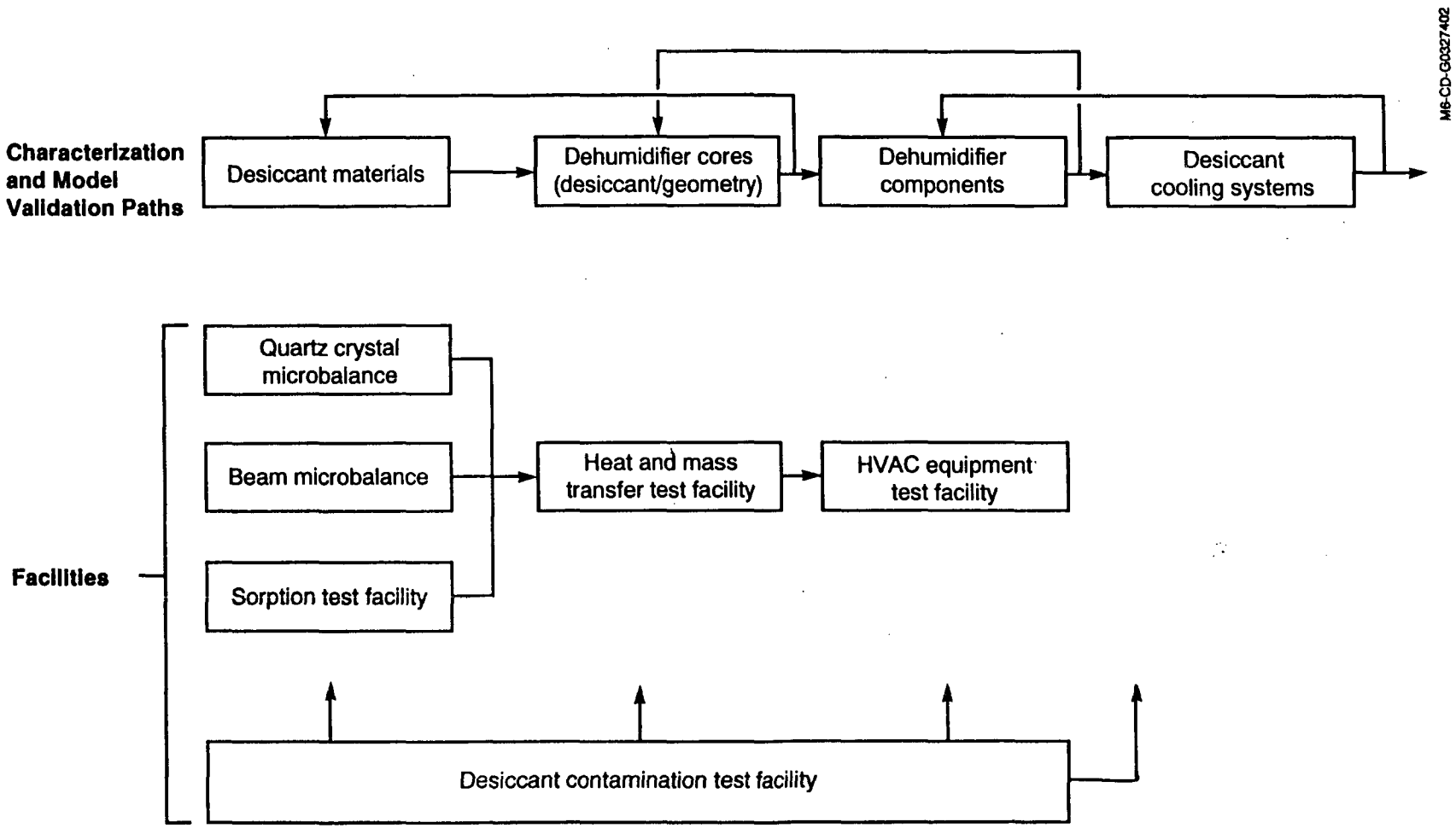

Figure A-1. NREL desiccant cooling test facilities

There is a progression in the mass and the size of the items tested in the above test facilities. The QCM uses samples with masses that are usually less than 1 mg with thicknesses of less than 10 μm. The STF uses desiccant and matrix samples with masses between 0.5 and 10 g and sizes between 0.5 and 10 cm^3. Dehumidifier matrices that contain between 100 and 1000 g of desiccant and have volumes between 2 and 8 liters can be tested in the HMTF. The HVACTF can test dehumidifiers that contain 2 to 20 kg and have sizes of 20 to 100 liters. The approach of starting with small samples and, after screening and evaluating, progressing to larger samples prevents undue expenses of fabricating costly experimental dehumidifier matrices and prototype dehumidifiers and performing unnecessary experiments. Dehumidifiers are fabricated and tested using only materials and matrices that have shown sufficient potential.

The desiccant contamination test facility is used to contaminate and degrade different desiccant samples in a controlled manner. The purpose is to obtain experimental data on the magnitude and mechanisms of desiccant degradation. The eventual goal is to evaluate strategies to prevent and mitigate degradation of desiccants in order to develop desiccant systems with long service lives.

In the following sections, the hardware of each experimental facility at NREL is described, the experimental procedures are explained, and typical output results from these facilities are provided.

A.1.1 Quartz Crystal Microbalance (QCM)

The QCM is one of the best commercially available units (Czanderna and Thomas, 1986) suitable for measuring water vapor-sorption performance properties of thin-film materials, especially polymeric desiccants. In the QCM, a desiccant material is coated onto a quartz crystal oscillator. Changes in the mass of the coating because of water vapor adsorption or desorption cause changes in the crystal vibrational frequency that can be measured by a frequency counter. The measured frequency can then be correlated to a mass gain or loss. At NREL, Czanderna and Thomas (1986, 1987) have developed a QCM to detect frequency changes that correspond to a mass change of about 10^{-9} g. They have demonstrated detectability of 10 ppm in a sample weighing 0.1 mg.

The QCM apparatus (Figure A-2) consists of vacuum system; a residual gas analyzer; a QCM controller; a temperature bath for quartz crystal sensors; instrumentation to measure pressure, temperature, frequency; and a data acquisition system. The vapor pressure can be measured to a precision of 10^{-4} of total pressure, and the temperature is maintained to a precision of less than 0.08°C. The apparatus has five crystal holders, so one can measure the sorption capacity and kinetics for several desiccant materials at the same time.

The experimental procedure consists of several steps (Czanderna and Thomas, 1987). A quartz crystal is first cleaned ultrasonically. The crystal is weighed on an analytical balance. Then a polymeric desiccant is dissolved in a solvent that is subsequently pipetted onto the crystal surface, and the solvent is allowed to evaporate. After reweighing to find the mass of the polymer film, the crystal is attached to the oscillator and is assembled in the vacuum system. The sample chamber is pumped to the 10^{-8} torr range, and the oscillator mass is zeroed after the mass loss or gain has equilibrated. The system is allowed to equilibrate with the desired temperature. Water vapor is then introduced into the chamber to increase the water vapor pressure incrementally as desired, which is typically in 1 to 2 torr steps. The pressure and mass measurements are taken at the intervals of 2 seconds during the adsorption. After reaching the desired maximum vapor pressure, the process is reversed by decreasing the water vapor pressure in the desired decrements followed by equilibration intervals, and thus obtaining the desorption data.

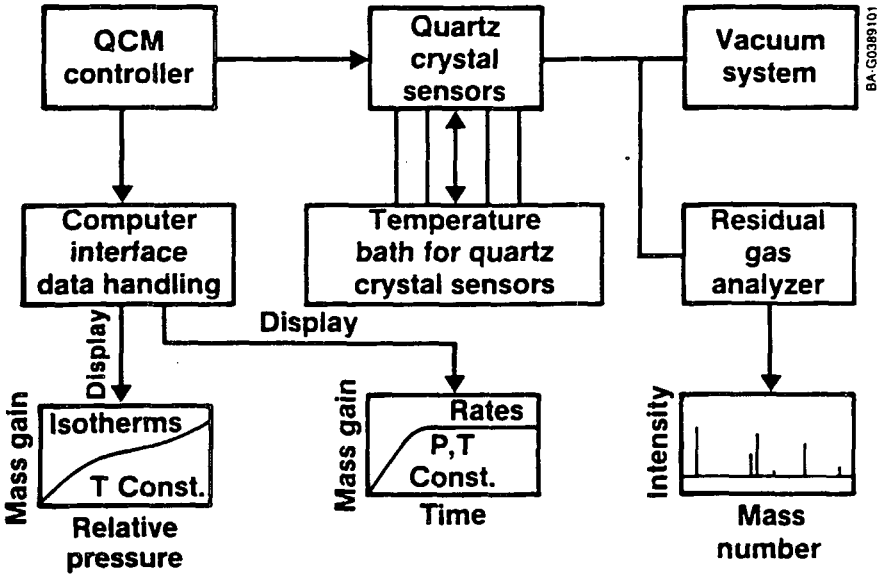

Figure A-2. Block diagram showing the principal components of the NREL quartz crystal microbalance apparatus (Czanderna and Thomas, 1987)

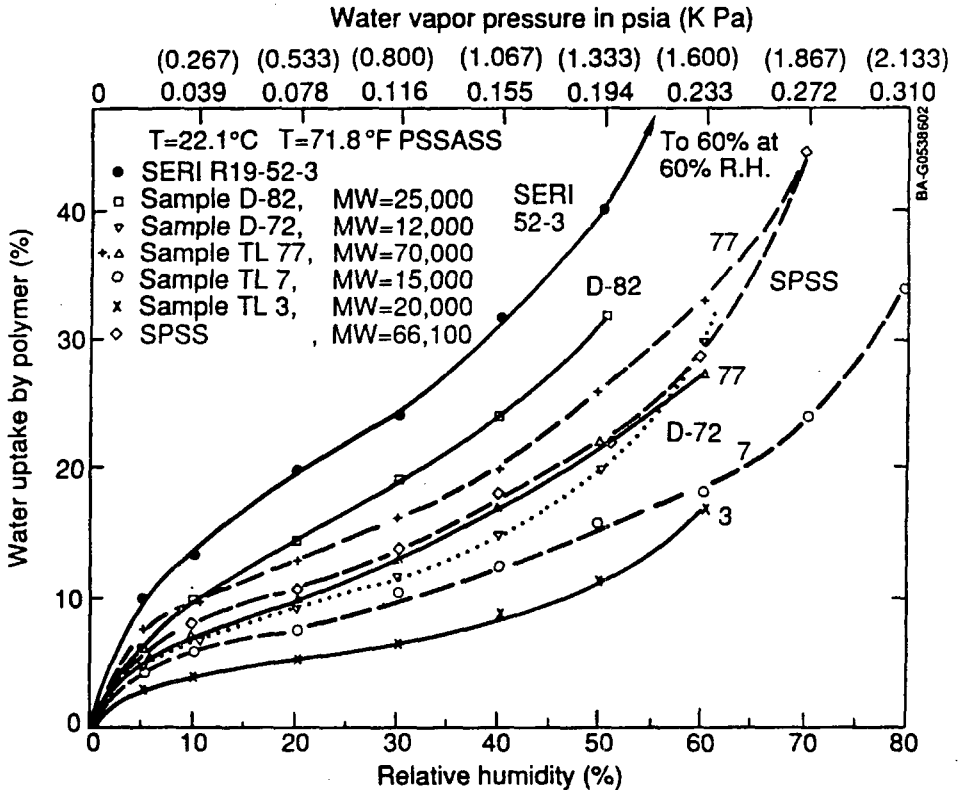

Figure A-3. Typical results of the quartz crystal microbalance apparatus, adsorption/desorption for polystyrene sulfonic acid sodium salt with various molecular weights at 22.1°C (Czanderna and Niedlinger, 1991)

The water capacity is obtained by dividing the mass of water gained or lost by the mass of the desiccant. The relative humidity is the ratio of water vapor pressure to the saturation water vapor pressure at the crystal temperature. Figure A-3 shows a typical result of sorption capacity measurement of polystyrenesulfonic acid sodium salts obtained by the QCM apparatus. Of more than 30 commercial and laboratory- synthesized desiccant polymers characterized (Czanderna, 1988) with this QCM, nine have shown potential for desiccant cooling applications when compared with a hypothetical desiccant with the "ideal" isotherm identified by Collier et al., (1986). Three of the most promising ones are polystyrene sulfonic acid sodium salt, cellulose sulfate sodium salt, and polyacrylic acid ammonium salt.

NREL has recently added a sartorius beam microbalance to the QCM vacuum system. The beam microbalance is capable of measuring the sorption capacity of desiccant in particle or liquid forms.

A.1.2 Sorption Test Facility (STF)

The STF is used to measure the water-vapor sorption capacity of desiccant materials, as well as their moisture transfer rates, under isothermal conditions (Zangrando et al., 1986). The sorption capacity (i.e., the amount of moisture the desiccant can hold at various humidities) is obtained by a gravimetric technique.

The sorption test facility (Figure A-4) consists of a dry air source, a humidifier, a sample test section, a constant temperature bath, and instrumentation for measurements and data collection. Bone-dry air from a compressed air cylinder enters a mass flow controller that measures and controls the air mass flow rate. Then, the air flows through a humidifier to obtain the desired level of water vapor concentration. In the humidifier, the air becomes saturated as it bubbles through deionized water kept at a desired temperature. The dew-point temperature and absolute pressure of the air before entering a test cell are measured by a chilled-mirror hygrometer and a capacitance-type pressure transducer, respectively. The test cell containing a desiccant is immersed in the constant temperature bath, which is measured with a thermocouple. Two types of test cells have been used: packed bed and parallel passage. The test cell is connected to a bypass line and three-way switching valves. The dew-point temperature and absolute pressure of the air leaving the test cell are measured with another hygrometer and pressure transducer, respectively. The air pressure in the test cell is controlled with a set of valves before the air is exhausted to the atmosphere.

We have developed a careful experimental procedure. A precision balance with repeatability of 0.1 mg is used to measure the dry mass of the test cell. Then, the test cell is loaded with desiccant and dried by passing bone-dry air through it at 100°–120°C and near-ambient pressures for at least 24 hours. After being air cooled, the sample is weighed to determine the dry mass of the desiccant. The test cell is inserted in the housing and installed in the apparatus and then immersed in the constant-temperature bath.

The process air, which is bypassing the air at this point, is conditioned to the desired humidity, temperature, pressure, and flow rate. Once the process air conditions reach steady-state values, the air is switched to the test cell. The outlet dew-point temperature and pressure are recorded as function of time to provide kinetic data. When the air and the desiccant reach equilibrium with each other, the test cell is removed, capped, and weighed to determine any mass change in the desiccant resulting from moisture adsorption or desorption. The test cell is then reinstalled in the apparatus and exposed to the same air conditions again. After 3–4 hours, the sample is removed for weighing again. This process is repeated until the difference between consecutive masses is not noticeable with the balance.

The equilibrium capacity is calculated by dividing the mass gain (or loss) by the dry mass of the desiccant. The relative humidity is calculated from the measurements of equilibrium pressure, dew-point temperature,

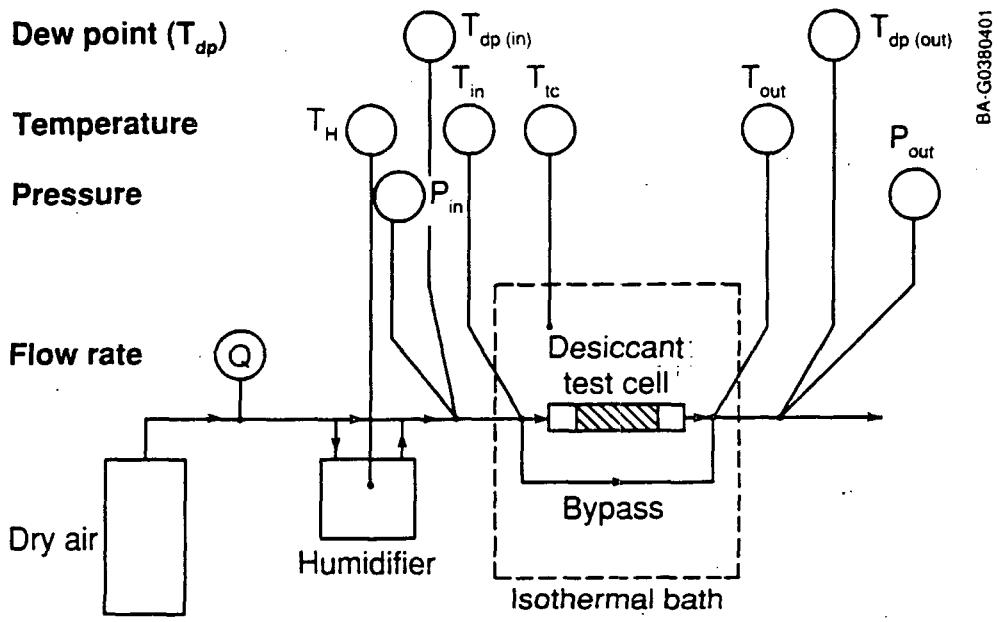

Figure A-4. Schematic of the NREL desiccant sorption test facility

and bath temperature using a psychometric relation. Generally the error in the sorption capacity is less than 2%, and the error in the relative humidity is less than 5%. Several measurements at the same test cell temperature and various relative humidities enable us to construct the equilibrium isotherm of the desiccant, which can be used to evaluate its potential for desiccant cooling applications. Figure A-5 shows the typical results of the STF; i.e., equilibrium water capacity of several desiccants at different relative humidities for 30°C. Among more than 10 desiccants tested, microporous silica gels (e.g., grade 40, microbead grade 3A, and Syloid 63) have been found to have the most suitable sorption properties for thermally regenerated solid desiccant cooling applications based on these results and system performance simulations.

A.1.3 Heat- and Mass-Transfer Test Facility (HMTF)

The HMTF is used to test different dehumidifier matrices that contain a desiccant material, with or without a substrate, formed into a particular geometry. In the HMTF, the pressure drop and heat- and mass-transfer rate data and dehumidification capacity of a promising dehumidifier matrix are obtained under adiabatic conditions. The HMTF (Figure A-6) consists of an air heater, a steam injector, a variable-speed fan, an orifice plate, a test section, and instrumentation to control and measure airflow rate, air temperatures, pressure drops, and dew-point temperatures (Pesaran, 1986). The test section that contains a test matrix, temperature sensors, air samplers for humidity measurements, and pressure taps has a rectangular section with removable walls for inserting test matrices. Air temperatures are measured using copper-constantan thermocouple wires with an uncertainty of less than 0.4°C. Air humidities are calculated from the dew-point temperatures measured using chilled-mirror dew-point hygrometers with an uncertainty of

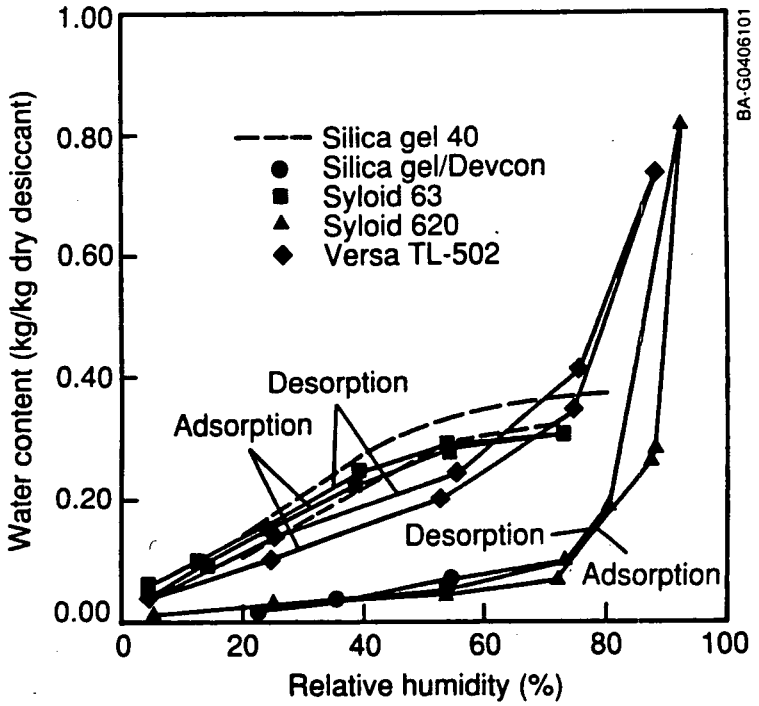

Figure A-5. Typical results of the sorption test facility, adsorption/desorption equilibrium capacity of several desiccants at 30°C

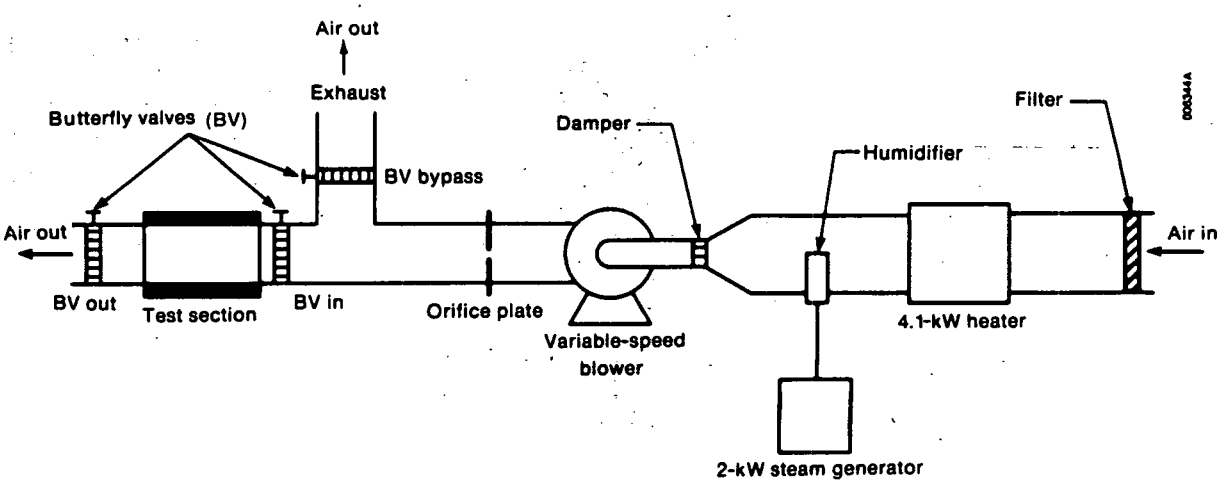

Figure A-6. Schematic of the NREL desiccant heat- and mass-transfer test facility

less than 3% in humidity ratios. The pressure drop across the orifice plate and a test matrix are measured using capacitance-type pressure transducers with an uncertainty of less than 1%. Air mass flow rates are determined by ASME standard orifice plates with an uncertainty of less than 3%.

In the experimental procedure, each step-transient test basically consists of three parts: matrix conditioning, process air preparation, and transient response. After the matrix is installed in the test section, it is insulated to simulate adiabatic conditions. The dehumidifier matrix is conditioned to a desired uniform state (temperature and desiccant water content) by passing conditioned air through the matrix. Then the air is bypassed and the matrix is sealed by closing butterfly valves on both sides. The process airstream is brought up to a new state (temperature and humidity) while passing through the bypass. Finally, when the process airstream reaches the desired humidity, temperature, and flow rate, it is abruptly introduced to the matrix, and the transient response of the matrix is obtained by recording the outlet air temperature and dew-point temperature (humidity) as a function of time. Both adsorption (dehumidification) and desorption (regeneration) tests are performed. The pressure drop across the test matrix as a function of mass flow rate is measured when equilibrium is reached.

Figure A-7 shows a typical adiabatic transient response of a dehumidifier test matrix. These typical adiabatic responses are a measure of how fast the heat and moisture are transferred from (or to) the matrix to (or from) airstreams and thus how effective the dehumidifier is in removing moisture from an airstream. The humidity curves can also be integrated to provide the dehumidification capability of the matrix. Using theoretical models (Pesaran, 1986; Maclaine-cross and Pesaran, 1986; and van den Bulck, 1987), the temperature and humidity response curves can be manipulated to obtain the heat- and mass-transfer coefficients of the matrix under tested conditions. Two silica-gel/parallel-plate matrices, a silica-gel/staggered-parallel-strip matrix, a lithium-chloride/sine-passage matrix, a silica-gel/sine-passage test matrix, and a parallel-plate matrix with silica-gel/Teflon composite substrate have also been tested. Table A-1 shows the results of analysis of the transient response and pressure drop characteristics of the first three matrices. Higher heat and moisture transfer rates and lower pressure drops are desired since these relate to higher moisture removal effectiveness and lower fan power, respectively. For these reasons the microbead-silica-gel/staggered-parallel-strip matrix is expected to provide the highest dehumidifier efficiency of the three for a given size and pressure drop (Pesaran, 1987).

A.1.4 HVAC Equipment Test Facility (HVACTF)

The HVAC equipment test facility (formerly cell desiccant cyclic test facility) is used to measure the performance of prototype HVAC components, such as rotary dehumidifier wheels. Although the facility can be used to measure the performance of evaporative coolers, heat exchangers, heat pipes, cooling coils, and other HVAC components, we focus here on the use of the facility for measuring the performance of rotary dehumidifiers. The facility simulates operating conditions expected in thermally regenerated desiccant cooling systems. The dehumidifier component, which consists of a desiccant in a dehumidifier matrix and necessary support and hardware, rotates between an adsorption airstream and a regeneration airstream. The dehumidifier adsorbs the moisture from the adsorption stream and releases it into the regeneration stream. The facility generates data on the amount of moisture and heat transferred as a function of air temperatures and humidities, airflow rates, and rotational speed of the dehumidifier wheel.

The cyclic test facility (Figure A-8) consists of two duct heaters, two duct humidifiers (a boiler with two steam injectors), two variable-speed fans, flow nozzles, and the dehumidifier section (Schultz, 1986 and Bharathan et al., 1987). A full set of automated controls maintains steady-state inlet conditions for the temperature, absolute humidity, and airflow rate. Instruments are used to monitor and record the ambient air conditions, dehumidifier inlet and outlet air conditions for both airstreams, and wheel rotational speed. Air temperatures are measured with copper-constantan thermocouple wires with an uncertainty of

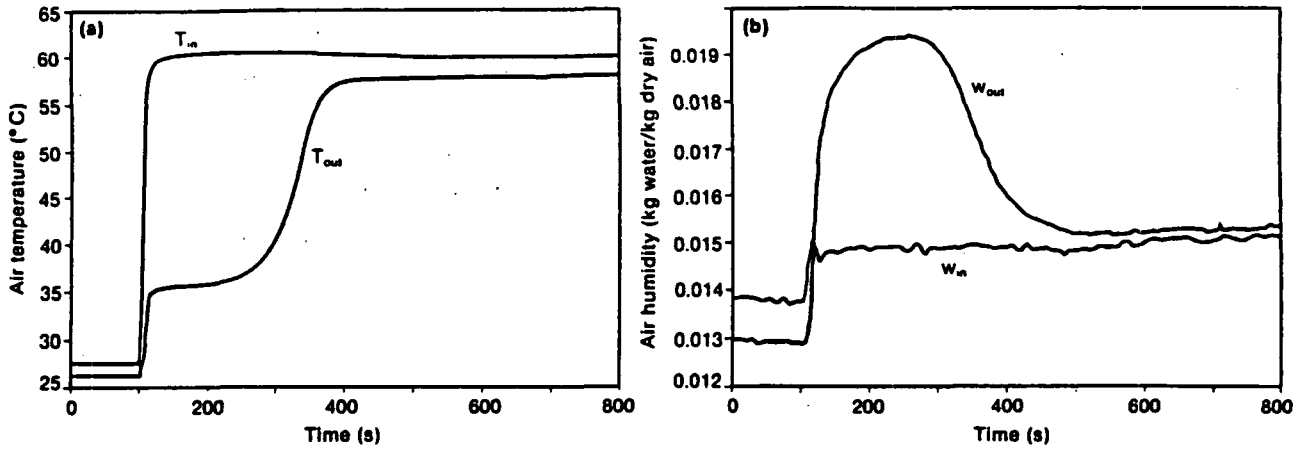

Figure A-7. Typical Results of the heat- and mass-transfer test facility, transient response of the microbead silica-gel/parallel-plate test matrix (Pesaran, 1987)

Table A-1. Results of Analysis of Transient Response Curves for Three Matrices Tested in the Heat- and Mass-Transfer Test Facility (Pesaran, 1987)

Dehumidier Matrix	Nu_o	Nu_{mo}	Le	fRe	Nu_o/fRe
Crushed silica gel parallel plate	3.59	3.15	1.14	25.49	0.141
Microbead silica gel parallel plate	3.70	3.70	1.00	22.61	0.164
Microbead silica gel staggered parallel strip	6.68	6.30	1.06	36.87	0.181

Nu_o Mean overall heat transfer Nusselt number
Nu_{mo} Mean overall mass transfer Nusselt number
Le Mean Lewis number (= Nu_o/Nu_{mo})
f Mean friction factor
Re Mean Reynolds number

Nu_o and Nu_{mo} are measures of how fast heat and moisture are transferred from or to a matrix.

fRe is a measure of pressure drop across a matrix.

0.4°C. The absolute humidities are obtained by measuring the dew-point temperatures using the chilled-mirror hygrometers and psychometric correlations. The error in humidities is less than 3%. Capacitance-type pressure transducers measure the pressure drops across the dehumidifier and the flow nozzles with an uncertainty of less than 1%. Mass flow rates are measured with an uncertainty of less than 3% using ASME standard flow nozzles. The dehumidifier wheel is rotated by a DC servomotor turning a rubber-rimmed wheel in contact with the circumferences of the dehumidifier. An optical encoder mounted on the drive motor allows measurement of wheel rotational speed with an uncertainty of less than 1%.

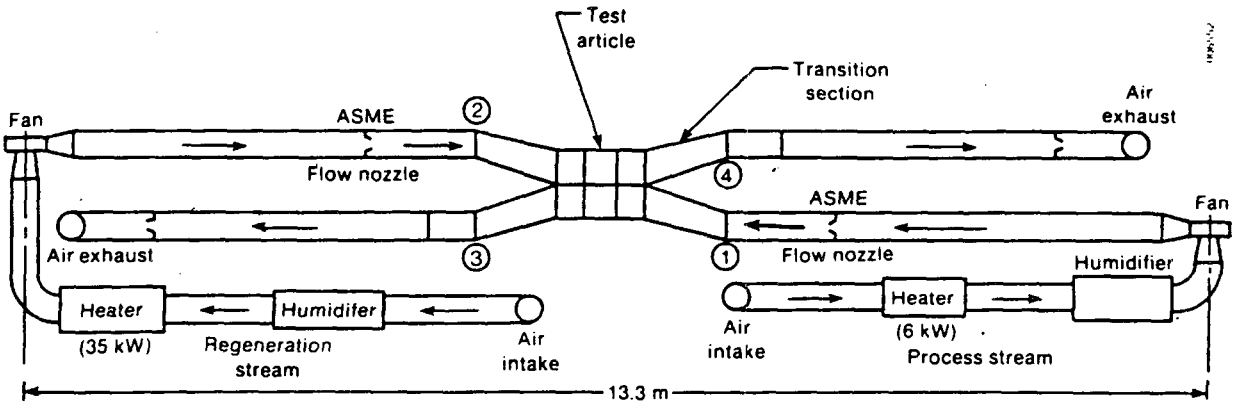

Figure A-8. Schematic of the NREL HVAC equipment test facility (formerly desiccant cyclic test facility)

After a prototype rotary dehumidifier is installed in the facility and insulated for simulation of adiabatic operation, the transient and steady-state performances of the dehumidifier are obtained (Bharathan et al., 1987 and Schultz, 1987). The process (adsorption) and regeneration airstreams are conditioned to achieve the desired airflow rates, inlet air temperatures, and humidities. The dehumidifier is not rotating during this conditioning period. When the outlet air conditions of both airstreams become uniform, the dehumidifier is rotated at the desired speed, and the outlet air temperatures and humidities of both process and regeneration airstreams are measured with time. This provides the transient performance. When the inlet and outlet conditions reach steady state, measurements of all the test parameters are recorded to provide the steady-state data. Data are obtained for a wide range of rotational speeds. The pressure drops across the dehumidifier for both airstreams are measured as a function of airflow rate.

Two prototype test dehumidifiers were tested in the HVACTF (Bharathan et al., 1987 and Schultz, 1987). Both had parallel-plate designs for the geometry because this geometry offers the highest heat-transfer-to-pressure-drop ratios among simple geometries (Kays and London, 1964). One had microbead (100 micron size) and the other had irregularly shaped silica gel particles (300 micron size); particles were coated on the air passages of the dehumidifier.

Figure A-9 shows typical steady-state test results for the microbead silica gel matrix. The process outlet air humidities are plotted against the outlet air temperatures for a range of rotational speeds. For this particular prototype and these operating conditions, the optimum dehumidification occurs at about 40.6 rev/h. The solid lines are the theoretical process lines. The overall heat- and mass-transfer units and pressure drops were estimated using analytical tools. Comparing the data with fully developed laminar flow models, it was found that the nonuniformity in the passage air gap in both matrices resulted in significant reduction (up to 50%) in the overall number of transfer units available for dehumidification (Bharathan et al., 1986). The tests showed that the microbead dehumidifier performed better in moisture removal than the other dehumidifier, although the microbead dehumidifier was 50% smaller in volume and had 25% less desiccant. Note that the HVACTF could be used to test most advanced concept dehumidifier designs such as liquid dehumidifiers or heat pipes as dehumidifier conditioners.

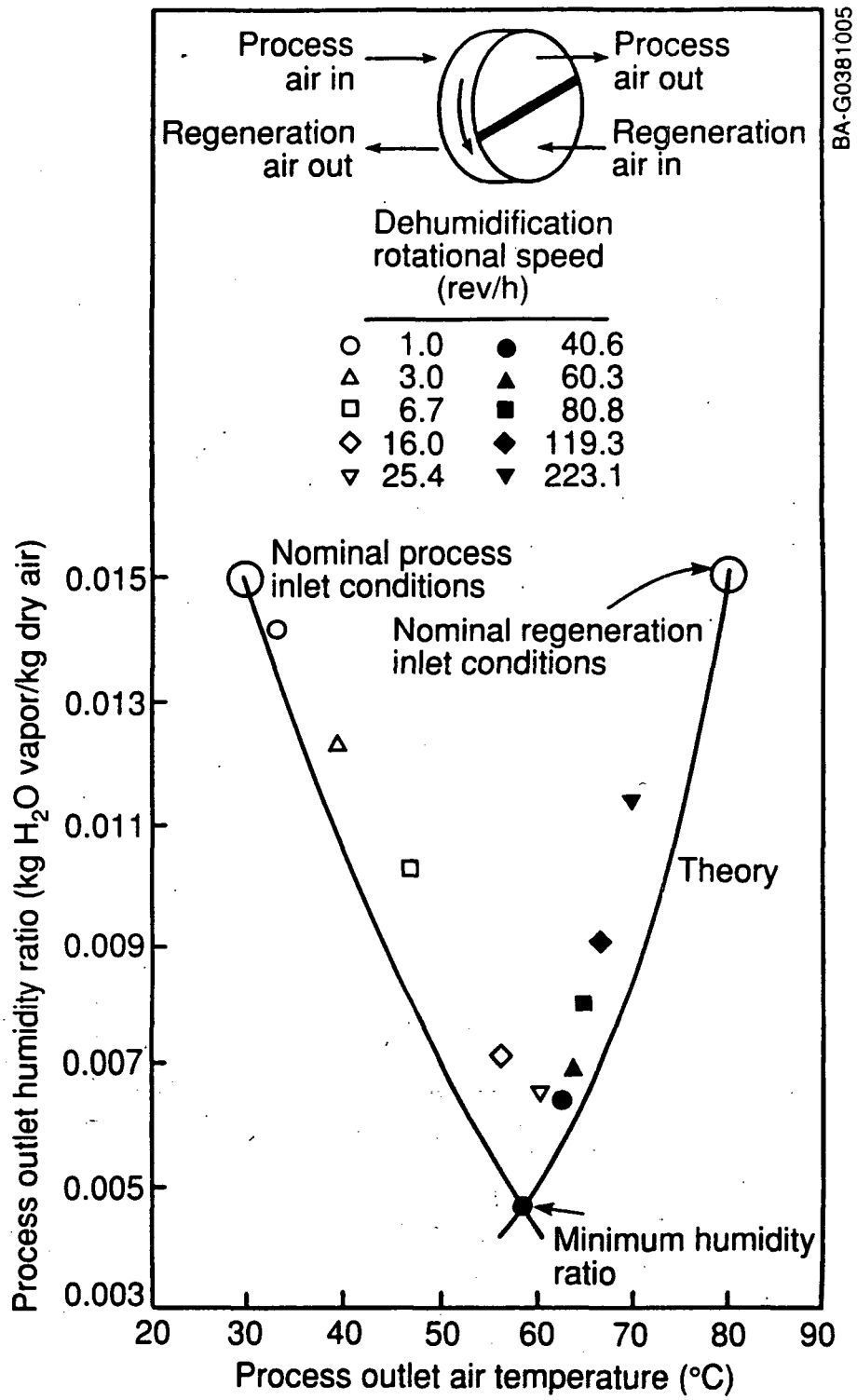

Figure A-9. Typical results from the HVAC test facility, outlet conditions for the process airstream from a microbead silica-gel/parallel-passage dehumidifier as a function of rotational speed (Bharathan et al., 1986)

A.1.5 Desiccant Contamination Test Facility (DCTF)

The hardware, function, and purpose of the DCTF are described in detail by Pesaran and Bingham (1991). In this section, the test facility is described briefly. The purpose of the DCTF is to provide data on the degradation of desiccant materials with time because of hydrothermal cycling and airborne contaminants. Specifically, the DCTF was designed to:

- Cycle desiccant samples between a hot and a warm stream of humid air
- Expose desiccant samples to airborne contaminants such as cigarette smoke
- Simulate the operation of a desiccant dehumidifier in a solar-regenerated desiccant cooling system.

The DCTF consists of two test cells that can each hold 100 desiccant sample tubes, two flow-through heaters, two external booster heaters, air filters, a humidifier, a smoking machine, and an air blower. The components are connected via 3.8-, 5-, and 7.6-cm galvanized steel pipes. After the air is humidified to 0.012 to 0.016 kg water/kg dry air, it is divided into two branches.

In each branch, air passes through a heater and a test cell. The hot heater (2 kW) heats up the air in one airstream to about 120°C; the warm heater (0.5 kW) warms the air in the second branch to about 35°C. The heat from the booster heaters compensates for the heat losses between the heaters and the test cells. Depending on whether the valves in each branch are in the open or closed position, hot air can go in only one test cell (for desiccant regeneration) while warm, humid air is going in the other test cell (for desiccant adsorption). After coming out of the two test cells, the airstreams in the two branches join in one stream that is exhausted outside the building with an air blower. Cigarette smoke (or any other contaminant) is injected through a pipe connected to only one of the test cells. Figure A-10 depicts these configurations schematically.

Note that the desiccant samples in the contaminated test cell of the DCTF represent worst-case scenarios for desiccant materials for each of the following cases:

- The desiccant cooling cycle is in the ventilation mode and the outside air is very polluted.

- The desiccant cooling cycle is in the recirculation mode and the return air from the conditioned space is very polluted.

- The desiccant cooling cycle is in any mode and the regeneration air is very polluted.

When a desiccant cooling system is in the recirculation mode, return air from the conditioned space (containing air pollutants) is first passed through the dehumidifier. In the ventilation mode of a desiccant cooling cycle, the outside air (containing pollutants) is first passed through the desiccant dehumidifier.

Temperatures and humidities of air at the entrance and exit of each test cell were monitored and recorded during the contamination test by a set of thermocouple array and dew-point hygrometers. The flow rate to each test cell was measured with a turbine flow meter. The pressure drop across each test cell was measured with a pressure transducer. The absolute pressure in each test cell was measured by a differential pressure transducer with one side connected to ambient air with known pressure. The analog signals from all the sensors were taken with a digital-voltmeter/scanner. The analog signals were then converted to digital signals and transferred to a personal computer for calculations, display, and storage. The data were collected and stored in either 15-s or 1-min intervals.

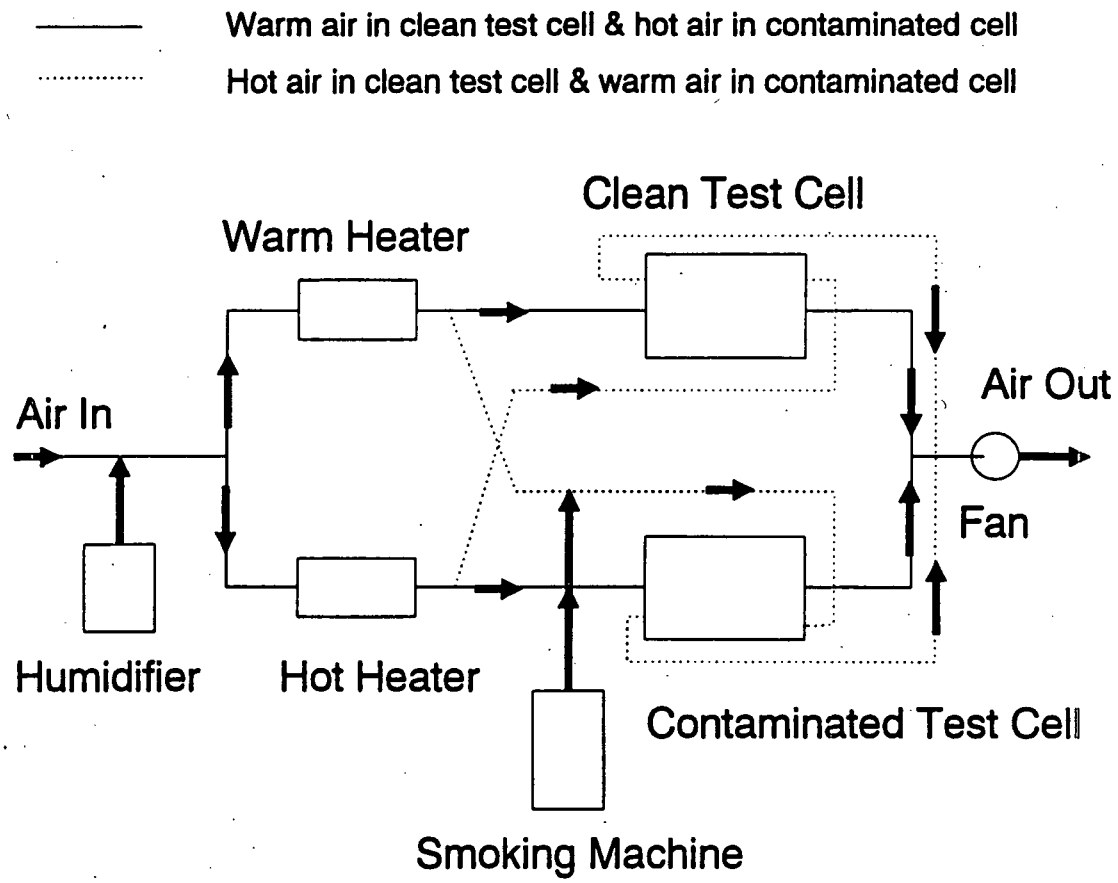

Figure A-10. Schematic of the NREL desiccant contamination test facility

The actual air temperature going into each test cell was about 42°C during adsorption and 80°C during regeneration. The air humidity going into each test cell was about 0.014 (±0.001) kg water/kg dry air. The cycle time of 7.4 min between regeneration and adsorption in each test cell was achieved by simultaneously opening and closing a set of valves energized and de-energized by an electrical repeat-cycle timer. The airflow rate through each test cell was 9.5 L/s (20 scfm). To obtain design concentration of cigarette smoke in the airstream going through the contaminated test cell, cigarette smoke was generated by a continuous smoking machine. The smoking machine, specified by NREL and designed and fabricated by Fidus Instruments Corporation, injected fresh smoke at a rate of six cigarettes per hour into one of the airstreams of the DCTF, where it was diluted with air (at 2.5 L/S) to the desired concentration. This injection rate was based on twice the upper bound of concentration of particulate matter in smoking residences, the airflow rate through a test cell, and the emission and burning rates of common cigarettes. In the smoking machine, a hopper drum fed cigarettes from a hopper to a smoking drum. The smoking drum brought the cigarette in front of an electric lighter. It was lit, and it burned passively. After 10 minutes, the drums rotated, dropped the cigarette butt into an ash receptor, and fed another cigarette for burning. The smoking machine was placed in a plexiglass box. The smoke generated was mixed with about 0.15 L/s of ambient air and was drawn from the top of the plexiglass box into the contaminated test cell where it was mixed with about 9.5 L/s of ambient air.

Each test contains 100 sample tubes containing desiccants. The sample tubes are held by individual cylindrical brass sleeves. The sample tubes were made of brass, with an outer diameter of 8.7 mm and a length of 7.6 cm. Sample tubes were loaded with six different desiccant materials. When possible, two

different batches of each desiccant were used to account for batch-to-batch or lot-to-lot variations caused by changes during manufacturing. For example, two different batches of microporous silica gel (Davison grade 40) were tested. The test cells were insulated during the contamination test.

We prepared 10 sample tubes per desiccant for each test cell. Each test cell could hold 100 desiccant samples, so we prepared 200 desiccant samples for testing in the DCTF. Sample tubes were prepared by loading 1.6 g of particulate desiccants. Metal screens were placed at both ends of each tube to hold the desiccant particles in the tubes. The samples were dried with air at 1.5% relative humidity and 100°C. The desiccant tubes were capped on both ends with plastic caps to prevent the desiccant from interacting with the ambient air when not in the test cells. Using a microbalance with a precision of 0.1 mg, we measured the weight of each tube, the weight of the screens, the weight of the dried desiccants, and the weight of the plastic caps. A set of 20 desiccant sample tubes was prepared in the same manner as the virgin baseline for comparison with samples exposed in the ambient and contaminated test cells.

The desiccant sample tubes were installed in the two test cells. The ambient air at the designed flow rate, humidity, and temperature was sent through the test cells. Cigarette smoke was injected only into the contaminated test cell. The hot regeneration and warm adsorption airstreams were switched between the two test cells at a cycle time of 7.4 min. The experiments were run for 24 hours a day since the start of the contamination experiment in mid-August 1989 until mid-June 1990. After 0.5, 1, 2, 4, and 10 months, the appropriate sample tubes from each test cell were removed. At each time, about 20 samples were removed from each test cell and replaced with tubes containing glass beads or desiccant materials. To account for the variation in properties in a single batch of desiccant, we tested two samples from each desiccant batch each time the samples were removed. Each month of testing in the DCTF is equivalent to 6 months of field operation, assuming that a desiccant dehumidifier works 8 hours a day for 6 months a year and the concentration of contaminant is the same in the field as in the experiment. We believe smoke concentration is two to three times the amount found in buildings. Therefore, we expect each month of testing to be equivalent to 1 year of field operation.

After the samples were removed from the clean and contaminated test cells, their sorption capacity was measured in the NREL desiccant heat- and mass-transfer facility by using a gravimetric technique. A set of the silica gel samples (virgin, ambient, and contaminated) was sent to a commercial laboratory for internal pore structure analysis. Another set of samples was sent for scanning electron microscopy and x-ray photoelectron spectroscopy. The contaminants deposited on some of the samples were extracted using a solvent and analyzed using the gas-chromatography/mass-spectroscopy technique. The results of these techniques are discussed in detail by Pesaran and Dresler (1990).

The most important property of a desiccant for dehumidification and cooling applications is its ability to remove water vapor. This is usually quantified in terms of moisture capacity (kg moisture removed/kg dry desiccant) as a function of relative humidity; i.e., equilibrium isotherm. The moisture capacity of a desiccant may change on thermal cycling and exposure to pollutants. Comparisons among the moisture capacity of virgin, thermally cycled, and contaminated samples were made to quantify degradation effects. NREL measured the adsorption capacity of virgin, clean, and contaminated desiccant samples at 30.5°C and various relative humidities (14%, 29%, 44%, 58%, and 73%). The desiccant samples that were removed were installed in the heat- and mass-transfer test facility and exposed to humid air at desired conditions for about 20 hours. The samples were then removed and capped, and their moisture gain was measured with a microbalance. The weight of moisture gain divided by the dry weight of desiccant provided the moisture capacity of the sample.

Typical results of capacity measurements of virgin, clean, and contaminated samples for silica gel (lot #2, Davison grade 40, MDF88) at 30.5°C are given in Figure A-11. From this and similar data for other

desiccants, we found that a desiccant may lose 30% to 70% of its sorptive capacity on exposure to cigarette smoke under worst-case conditions.

Using the obtained degradation data, the impact of desiccant degradation on the performance of a desiccant cooling cycle was estimated using a system model (Pesaran, 1990). Depending on the degree of desiccant degradation, the decrease in thermal COP and cooling capacity of the system was 10% to 35% under worst-case conditions. It was found that the COP and, to a lesser degree, the cooling capacity of the degraded systems can be improved by increasing the rotational speed of the dehumidifier. This research indicated that under more realistic field conditions, desiccant degradation would not be a significant factor for desiccant cooling technology in commercial and residential HVAC applications.

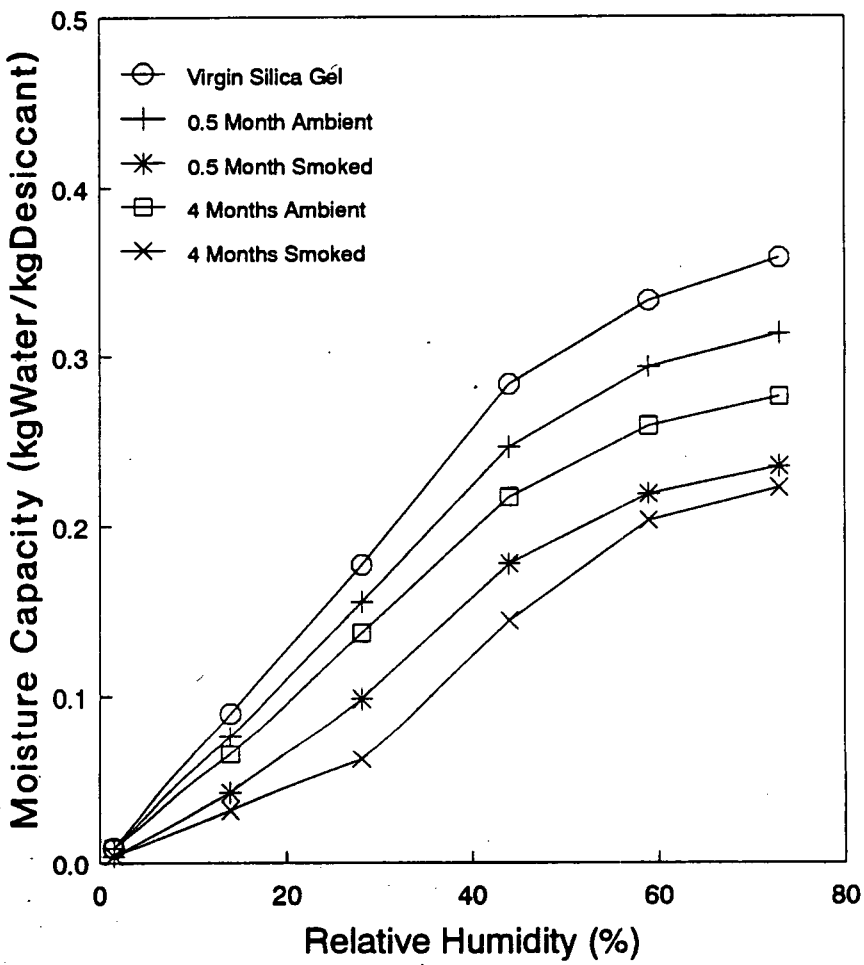

Figure A-11. Typical results from desiccant contamination test facility. Moisture capacity of virgin and exposed silica gel samples at 30.5°C. (Pesaran, 1990) (Note: 1 month of laboratory testing shown here is equivalent to 0.5 to 1 year of field operation.)

Appendix B
External Distribution List

N. M. Banks
Cargocaire
79 Monroe Street
P.O. Box 640
Amesbury, MA 01913

Carl Bergt
Trane Systems Engineering Co.
6200 Troup Highway
Tyler, TX 75711

Robert Bishop
Competitek
1050 Walnut Street, Suite 205
Boulder, CO 80302-5140

Carl Blumstein
Universitywide Energy Research Group
Rm. 216, Bldg. T-9
Berkeley, CA 94720

Steve Brickley
Cargocaire Engineering Corp.
79 Monroe Street
Amesbury, MA 01913

Carl Brown
California Institute for Energy Efficiency
Lawrence Berkeley Laboratory
Mail Stop 90-3124
1 Cyclotron Road
Berkeley, CA 94720

F. C. Chen
ORNL
Energy Division
Oak Ridge, TN 37831

Jim Coellner
ICC Technologies
441 North Fifth Street
Philadelphia, PA 19123

Barry Cohen
TECOGEN, Inc.
45 First Avenue
Waltham, MA 02154

Kirk Collier
Florida Solar Energy Center
300 State Road, 401
Cape Canaveral, FL 32920

Robert De Remer
American Gas Assoc. Lab
8501 E. Pleasant Valley Road
Independence, OH 44131

R. J. Denny
Air-Conditioning & Refrigeration Institute
1815 North Fort Meyer Dr.
Arlington, VA 22209

W. H. Dolan
Gas Research Institute
8600 West Bryn Mawr Avenue
Chicago, IL 60631

Walter G. Evers
Coward-Eastman, Inc.
40 Townview Drive
Doylestown, PA 18901

Phillip Fairey
Florida Solar Energy Center
300 State Road, 401
Cape Canaveral, FL 32920

A. Hunter Fanney
National Institute of Science & Technology
Bldg. 226, Room B310
Washington, DC 20234

Stephen D. Fitch
Bry-Air
P.O. Box 795
Sunbry, OH 43074

P. Gandhidasan
Mechanical Engineering Department
King Fahd University of Petroleum and Minerals
Dhahran 31216
SAUDIA ARABIA

William C. Griffiths
Kathabar Systems
Somerset Technologies, Inc.
P.O. Box 791
New Brunswick, NJ 08903

L. G. Harriman
Mason-Grant Company
P.O. Box 6547
Portsmouth, NH 03802-6547

Robert J. Hasset
U. S. Department of Energy
CE 421, Room 5H-407
1000 Independence Ave., S.W.
Washington, DC 20585

Anthony Hines
1010 Engineering Building
University of Columbia
Columbia, MI 65211

Doug Hittle
Colorado State University
Solar Energy Applications Laboratory
Fort Collins, CO 80523

H. M. Ingram
Udall Center for Studies in
Public Policy
The University of Arizona
803/811 East First Street
Tucson, AZ 85719

Robert Jones
Los Alamos National Laboratory
P.O. Box 1663
Mail Stop H577
Los Alamos, NM 87545

Esher Kweller
U.S. Department of Energy
CE-422, 5H098
1000 Independence Ave., S.W.
Washington, DC 20585

Zalman Lavan
Illinois Institute of Technology
Department of Mechanical Engineering
Illinois Institute of Technology Center
Chicago, IL 60616

George Löf
Colorado State University
Solar Energy Applications Laboratory
Fort Collins, CO 80523

A. Lowenstein
AIL Research, Inc.
18 Cameron Court
Princeton, NJ 08540

Ian Maclaine-cross
University of New South Wales
School of Mechanical and Industrial
Engineering
P.O. Box 1
Kensington, NSW 2033 Australia

J. Marsala
Desiccant and Absorption Technologies
Gas Research Institute
8600 West Bryn Mawr Avenue
Chicago, IL 60631

John J. McGuiness Jr.
John J. McGuiness Co., Inc.
P.O. Box 1378
N. Hampton, NH 03862

G. Meckler
Gershon Meckler Associates, P.C.
590 Herndon Parkway, Suite 100
Herndon, VA 22070

Milton Meckler
Meckler Energy Group
17525 Ventura Blvd., Suite 307
Encino, CA 91316

Kirk T. Mescher
SEMCO Mfg. Inc.
1800 East Pointe Drive
Columbia, MO 65201

John Mitchell
University of Wisconsin-Madison
Engineering Research Building
1500 Johnson Drive
Madison, WI 53706

N. L. Nagda
GEOMET Technologies, Inc.
20251 Century Boulevard
Germantown, MD 20874-1192

Davor Novosel
Gas Research Institute
8600 West Bryn Mawr Avenue
Chicago, IL 60631

J. L. Peterson
Center for Energy Studies
The University of Texas at Austin
Balcones Research Center
10100 Burnet Road
Austin, TX 78758

C. A. Redman
Battelle Pacific Northwest Laboratory
Battelle Boulevard
Richland, WA 99352

Robert E. Roberts
Bry-Air Inc.
Rt. 37 West
P.O. Box 269
Sunbury, OH 43074

D. M. Ruthven
University of New Brunswick
P.O. Box 4400
Fredericton, N.B.
Canada E58 5A3

J. D. Ryan
U. S. Department of Energy
CE-422, FH-048
1000 Independence Avenue, S.W.
Washington, DC 20585

Y. Saito
Department of Mechanical Engineering
Osaka Institute of Technology
5-16-1, Omiya, Asahi-ku
Osaka 535, JAPAN

Ken Schultz
Trane Company
Building 15-5
3600 Pammel Creek Road
Lacrosse, WI 54601

S. V. Shelton
Department of Mechanical Engineering
Georgia Institute of Technology
Atlanta, GA 30332-0405

Ronald B. Slosberg
The Fleming Group
55 Colvin Avenue
Albany, NY 12206

D. L. Tchernev
The Zeopower Company
75 Middlesex Avenue
Natick, MA 01760

M. Wahlig
Lawrence Berkeley Laboratories
University of California
1 Cyclotron
Berkeley, CA 94720

W. H. Wilkinson
Battelle Columbus Division
Battelle Corporation
Columbus, OH 43201

Byard Wood
Department of Mechanical & Aerospace Engineering
Arizona State University
Tempe, AZ 85287

William Worek
Department of Mechanical Engineering
M/C 251
900 Science & Engineering Offices
Box 4348
Chicago, IL 60680

Bibliography

Introduction

We have conducted a comprehensive open literature search to compile this desiccant cooling bibliography. The following is a list of major data bases searched and their dates of coverage:

- Engineering Index; 1970-June 1992
- National Technical Information Service; 1964-June 1992
- DOE Energy Data Base; 1974-June 1992
- Dissertation Abstract Online; 1861-June 1992
- Chemical Abstracts; 1967-June 1992.

Additional information about these data bases is given in this section. Some of the older references known to the authors have been added to the bibliography.

Search Strategy and Results

The search strategy consisted of the following terms as they related to *cooling, dehumidification, or air conditioning*:

- Desiccants
- Silica gel
- Molecular sieves
- Lithium chloride
- Lithium bromide
- Adsorption/adsorbents
- Absorption.

When possible, the search was limited to the English language, although nearly all the data bases have international coverage.

After each data base was searched according to the above strategy, the citations found were downloaded and reformatted using a commercial bibliographical search program called Pro-Cite (from Personal Bibliographic Software, Inc., P.O. Box 4250, Ann Arbor, Michigan 48106; Tel: 313 996-1580). The citations were then edited and reorganized using Pro-Cite software, and additional citations were manually input into the data base. It is possible that some articles regarding desiccant or absorption cooling were not cited.

The data base contains about 1340 citations. The breakdown of the citations are as follows: 582 conference papers, 350 journal articles, 274 reports, 62 Ph.D. dissertations, 54 patents, and 18 books. Of the 1340 citations, 871 are about *desiccant cooling* and 533 are about *absorption cooling*, with about 64 citations common between the two. Two separate computerized data bases and bibliographies for each topic (Desiccant Cooling and Absorption Cooling) were prepared. Hard copies of these bibliographies are provided at the end of this report. The data bases (including most of the abstracts) are also available on floppy disks for access and manipulation by IBM-PC compatible computers using the Pro-Cite software.

Description of Data Bases

The following information is obtained from the provider of each data base.

Engineering Index or COMPENDEX® PLUS

Coverage: 1970 to June 1992
File Size: 2.5 million records
Updates: Monthly
Provider Engineering Information, Inc., New York, NY

The COMPENDEX PLUS data base is the machine-readable version of the *Engineering Index*, which provides abstracted information from the world's significant engineering and technological literature. The COMPENDEX PLUS data base provides worldwide coverage of approximately 4,500 journals and selected government reports and books. Subjects covered include: civil, energy, environmental, geological, biological engineering; electrical, electronics, and control engineering; chemical, mining, metal, and fuel engineering; mechanical, automotive, nuclear, and aerospace engineering and computers, robotics, and industrial robots. In addition to journal literature, over 480,000 records of significant published proceedings of engineering and technical conferences are included in COMPENDEX PLUS.

National Technical Information Service (NTIS)

Coverage: 1964 to the June 1992
File Size: 1,410,264 records
Updates: Biweekly
Provider: National Technical Information Service (NTIS),
U.S. Department of Commerce, Springfield, VA

The NTIS data base consists of government-sponsored research, development, and engineering plus analyses prepared by federal agencies, their contractors, or grantees. It is the means through which unclassified, publicly available, unlimited distribution reports are made available for sale from agencies such as NASA, DDC, DOE, HUD, DOT, Department of Commerce, and some 240 other agencies. In addition, some state and local government agencies now contribute their reports to the data base.

Truly multidisciplinary, this data base covers a wide spectrum of subjects including administration and management, agriculture and food, behavior and society, building, business and economics, chemistry, civil engineering, energy, health planning, library and information science, materials science, medicine and biology, military science, transportation, and much more.

DOE Energy Data Base (DOE Energy)

Coverage: 1974 to June 1992
File Size: 2,278,215 records
Updates: Biweekly
Provider: U.S. Department of Energy, Washington, DC

DOE ENERGY, the data base of the U.S. Department of Energy, is one of the world's largest sources of literature references on all aspects of energy and related topics. DOE ENERGY provides coverage of journal articles, report literature, conference papers, books, patents, dissertations, and translations. The

following energy topics are included: nuclear, wind, fossil, geothermal, tidal, and solar. Related topics such as environment, energy policy, and conservation are also included.

Use of this data base is restricted to the United States, Canada, the United Kingdom and Northern Ireland, France, Italy, Japan, Spain, The Netherlands, Norway, Finland, Denmark, and Sweden.

Dissertation Abstracts Online

Coverage: 1861 to June 1992
File Size: 1,043,613 records
Updates: Monthly
Provider: University Microfilms International, Ann Arbor, MI

DISSERTATION ABSTRACTS ONLINE is a definitive subject, title, and author guide to virtually every American dissertation accepted at an accredited institution since 1861, when academic doctoral degrees were first granted in the United States. In addition, citations for thousands of Canadian dissertations and an increasing number of papers accepted abroad are included in the data base. Professional and honorary degrees are not included. All subject areas are covered. Abstracts are included for a large majority of the degrees granted after January 1980. British and European dissertations are included in the data base from January 1988 forward. In addition, the data base includes the Masters Abstracts data base from Spring 1988 to the present.

Chemical Abstracts

Coverage: 1967 to June 1992
File Size: 8.94 million records
Updates: Biweekly
Provider: Chemical Abstracts Service

Chemical Abstracts covers all areas of chemistry and chemical engineering. *Chemical Abstracts* contains over 8 million records for documents reported in printed *Chemical Abstracts* from 1967 to the present. Sources include journals, patents, technical reports, books, conference proceedings, and dissertations from all areas of chemistry and chemical engineering worldwide. Bibliographic terms and indexing terms are searchable. Over 87% of the records in the English-language data base also contain abstracts, the text of which is searchable.

Acknowledgments

This literature search was conducted by A. Berger of the NREL Library and A. Pesaran of NREL's Thermal Sciences and Engineering Branch. A. Berger searched the major commercial data bases and provided a raw data base. R. Heiden, a student from Denver University, and A. Baca edited and refined the bibliographical data base, under the supervision of A. Pesaran, using the Pro-Cite software.

Desiccant Cooling Bibliography

Abebiyi, G. A.; Russel, L. D.; 1986, "Second law analysis of alternative schemes for solar-assisted air conditioning," American Society of Mechanical Engineers winter meeting. Computer-aided engineering of energy systems, Anaheim, CA, USA, 7 Dec 1986. New York, NY: American Society of Mechanical Engineers, Advanced Energy Systems Div., pp. 105-116, AES v 2-3.

Agarwal, R. S.; Aggarwal, M. K.; Das, Gupta P.; 1985, "Solar powered space conditioning system using LiBr as a desiccant," INTERSOL - 85. Proceedings of the ninth biennial congress of the International Solar Energy Society, Montreal, Canada, 23 Jun 1985. Elmsford, NY: Pergamon Books Inc., pp. 674-681.

Ahlberg, J. E.; 1939, "Rates of Water Vapor Adsorption from Air by Silica Gel", Ind. Eng. Chem., Vol. 31, No. 8; pp. 988-992.

Akopdzhanyan, E. S.; 1967, "Solar air conditioning with solid adsorbents", Appl. Solar Energy (USSR) (Engl. Transl.) (United States), Vol. 3, No. 6; pp. 97-100.

Akopdzhanyan, E. S.; 1969, "Solar air conditioning using solid adsorbents", Appl. Solar Energy (USSR) (Engl. Transl.) (United States), Vol. 5, No. 2; pp. 55-8.

Akulov, A. K.; Ustinov, E. A.; 20 Apr 1982, "Modeling of a cyclic adsorption process with vacuum-thermal regeneration", J. Appl. Chem. USSR (Engl. Transl.) (United States), Vol. 54, No. 11; pp. 2148-2152.

Al-Shawi, I. M.; Al-Murrani, K.; Hilal, K. H.; 1988, "Multi-stage, evaporatively cooled liquid desiccant air-conditioning system," Advances in solar energy technology. Vol. 1. Proceedings of the biennial congress of the International Solar Energy Society, Hamburg, F.R. Germany, 13-18 Sep 1987. Oxford, GB: Pergamon Press, pp. 1024-1028.

Al-Zuhair, M.; 1991, "Liquid desiccants for low energy regeneration Energy conservation in buildings: the achievement of 50% energy saving: an environmental challenge," Proceedings of NORTHSUN 90, an international conference, Reading (United Kingdom), Sep 18-21, 1990. Oxford (GB) Pergamon Press, pp. 406-412.

Albers, W. F.; Beckman, J. R.; Farmer, R. W.; Gee, K. G.; 1991, "Ambient Pressure Liquid Desiccant Air Conditioner", ASHRAE Transactions, Vol. 97, No. 2; pp. 603-608.

Alhamid, M. I.; 1990, Packed Bed and Rotary Desiccant Dehumidifier in Air-Conditioning Systems, Ph.D. Dissertation, Katholieke Universiteit Leuven (Belgium).

Altenkirch, E.; 1944, Air Conditioning, U. S. Patent #2 344 384.

Altenkirch, E.; 1941, Separating and Cooling Apparatus, U. S. Patent #2 233 189.

Aly, S. E.; Fathalah, K.; Gari, H. A.; 1988, "Analysis of an integrated vapour compression and a waste heat dehumidifier A/C system", Heat Recov. Syst. CHP (United Kingdom), Vol. 8, No. 6; pp. 503-528.

Aly, S. E.; Fathalah, K. A.; 1988, "Combined absorption-desiccant solar powered air conditioning system", Waerme- Stoffuebertrag, Vol. 23, No. 2; pp. 111-21.

Ambrose, C. W.; 1979, "Effects of component efficiencies on the performance of some novel air conditioning systems utilizing waste or solar energy," Energy conservation in the built environment, proceedings of the 2nd international CIB symposium, Copenhagen, Denmark, 27 May 1979. Copenhagen, Denmark: Danish Building Research Institute, pp. 9-18, Session 3.

American Hotel & Motel Association; 1991, Mold and Mildew in Hotels and Motels, Washington, DC: Report of the Executive Engineer's Committee of the American Hotel & Motel Association.

American Society of Heating, Refrigerating and Air Conditioning Engineers, Inc.; 1989, 1989 ASHRAE Handbook - Fundamentals, Atlanta, GA: American Society of Heating, Refrigerating and Air Conditioning Engineers. pp. 19.1 - 19.6.

Ameringer, G.; Shepherd, E.; 1983, "Validation of analytical model of absorbers for tiethylene glycol liquid desiccant dehumidification/cooling systems," ASME-JSME Thermal Engineering Joint Conference Proceedings, Mar 20-24, 1983. New York, NY, USA: ASME, pp. 479-486.

Anderson, D. M.; 1985, "Passive dehumidification," Alternative energy in the Midwest: research and applications, Schaumburg, IL, USA, 21 Feb 1985. Lake Bluff, IL: Conference and Publication Services, Inc., pp. 2.43-2.46.

Anderson, D. R.; Pesaran, A. A.; 1990, Exploration and Evaluation of Innovative Hybrid Solid Desiccant Substrates, GRI Contract No. 5088-295-1705. Chicago, IL: Gas Research Institute.

Anderson, D. R.; Pesaran, A. A.; 1991, "Innovative solid desiccant substrates for desiccant dehumidifiers," ASHRAE Winter Meeting - Technical Papers. ASHRAE Transactions pt 1. Publ by ASHRAE, Atlanta, GA, USA. p 578-586, New York, NY, USA, 1991 Jan 19-23.

Anderson, William M.; 1984, "Desiccant-Based Air Conditioning for Commercial Buildings," Energy Technology XI, Proceedings of the Eleventh Energy Technology Conference: Applications & Economics, 19-21 Mar 1984. Rockville, MD, USA: Government Inst Inc, pp. 424-433.

Anon; May 1978, "Bibliography: Solar Cooling Systems", Sol. Eng. Mag. (United States), Vol. 3, No. 5; pp. 41-44.

Anon; 1990, "Cable corrosion prevented on the Humber Bridge", Dock & Harbour Authority v 70 n 815 Jan-Feb 1990 p 251-252.

Anon; 1982, "Desiccant cooling rountable discussion," Annual DOE Active Solar Heating and Cooling Contractors' Review Meeting: Proceedings and Project Summaries, Sep 9-11, 1981. Washington, DC, USA: DOE, pp. 14. 8-14. 9, CONF-810912.

Anon; May 12, 1983, "Dessicant Cooling Arrives", Eng. News-Rec. (United States), Vol. 210, No. 19; p. 18.

Anon; Jan 1977, "Solar collector for sapce air conditioning desiccant type", Natl. Eng. (United States), Vol. 82, No. 1; pp. 5.

Arizona State Univ., Tempe AZ (USA); Nov 1983, Performance characteristics of open-flow liquid desiccant solar collector/regenerator for solar cooling applications. Part I: two dimensional analysis of heat and mass transfer for open flow over rough inclined surfaces, ERC-R-83043. Arizona State Univ., Tempe (USA). Coll. of Engineering and Applied Sciences.

Armstrong, P. R.; Brusewitz, G. H.; Jan-Feb 1984, "Design and testing of a liquid desiccant dehumidifier", Transactions of the American Society of Agricultural Engineers (General Edition), Vol. 27, No. 1; pp. 169-172.

Arnold, F. H.; 1980, "Dehumidification in passively cooled buildings Passive-cooling-applications handbook," 5th national passive solar conference, Amherst, MA, USA, 19 Oct 1980. pp. 257-296, LBL-PUB-375-Rev. CONF-801016-(Vol.3).

Arnold, F. H.; 1980, "Solar dehumidification," American section of the International Solar Energy Society conference: Solar cooling applications workshop, Phoenix, AZ, USA, 2 Jun 1980. pp. 110-116, PUB-355-CONF-800604-P1.

Arnold, F. H.; Barlow, R. S.; Collier, R. K.; 1980, "Design considerations for solar dehumidifiers," 5th national passive solar conference. Proceedings. Annual Meeting - American Section of the International Solar Energy Society (United States), Amherst, MA, USA, 19 Oct 1980. pp. 712-716.

Asaeda, Masashi; Du, Luong Dinh; Ushijima, Masao; 1985, "Feasibility study on dehumidification of air by thin porous alumina gel membrane", Drying '85, pp. 472-478.

Asker, Gunnar C. F.; 1965, "Advantages of humidity control by adsorption dehumidifiers in spaces requiring low humidities," Humidity Moisture; Meas. Control Sci. Ind., Pap. Int. Symp., pp. 392-400.

Assouad, Y. T.; 1985, Combined heat and mass transfer as applied to desalination and liquid desiccant cooling systems, PhD Thesis, Chicago, IL: Illinois Institute of Technology.

Auh, P. C.; Sep 1978, "Solar cooling R and D overview," 3rd solar heating and cooling R and D branch contractors' meeting, Washington, DC, USA, 24 Sep 1978. pp. 4, BNL-24924 CONF-780983-4.

Bacchus, R.; Dowdy, J.; Guajardo, J.; Nov 1986, Max air conditioner development: Advanced indirect/direct evaporative cooling: Final technical report, NMRDI-2-73-4614. Bacchus Industries, Inc., Sunland Park, NM (USA); Texas Univ., El Paso (USA).

Ball, H. D.; Ananth, G. P.; Singer, R. J.; Nov 1983, "The dehumidification of air using solar regenerated rotating beds of silica gel," ASME winter annual meeting. Am. Soc. Mech. Eng., (Pap.) (United States), Boston, MA, USA, 13 Nov 1983. pp. 9, 83-WA/SOL-2.

Banks, N. J.; 1990, "Desiccant Dehumidifiers in Ice Arena", ASHRAE Transactions, Vol. 96, No. 1; pp. 1269-1272.

Banks, N. J.; Kosars, D.; 1990, Development of Desiccant Based AC for Hotels and Motels, GRI Contract No 5090-243-1963. Chicago, IL: Gas Research Institute.

Banks, P. J.; 1982, "Effect of Fluid Carryover on Regenerator Performance", Joural of Heat Transfer, Vol. 104, pp. 215-217.

Banks, N. J.; Smith, C. B.; Davis, T.; Keneipp, M.; 1986, "Desiccant dehumidification in supermarkets," Productivity through energy innovation, Pacific Gas and Electric (PG and E) energy expo, Oakland, CA, USA, 29 Apr 1986. Elmsford, NY: Pergamon Books Inc., pp. 123-127.

Banks, P. J.; 1972, "Coupled Equilibrum Heat and Single Adsorbate Transfer in Fluid Flow through a Porous Medium - I Characteristic Potentials and Specific Capacity Ratios", Chemical Engineering Science, Vol. 27, pp. 1143-1155.

Banks, P. J.; 1985, "Prediction of Heat and Mass Regenerator Performance Using Nonlinear Analogy Method: Part 1 - Basis", Journal of Heat Transfer, Vol. 107, pp. 222-229.

Banks, P. J.; Feb 1985, "Prediction of Heat and Mass Regenerator Performance Using Nonlinear Analogy Method: Part 2 - Comparison of Methods", Journal of Heat Transfer, Vol. 107, No. 1; pp. 230-238.

Banks, P. J.; 1984, "The Representation of Regenerator Fluid", Journal of Heat Transfer, Vol. 106, pp. 216-220.

Banks, P. J.; 1986, "Technology update for desiccant-based air conditioning systems Strategic planning for cogeneration and energy management," 8th world energy engineering congress, Atlanta, GA, USA, 22 Oct 1985. Atlanta, GA: Fairmont Press, Inc., pp. 165-170.

Banks, P. J.; Close, D. J.; Maclaine-cross, I. L.; 1970, "Coupled Heat and Mass Transfer in Fluid Flow Through Porous Media - An Analogy with Heat Transfer," 4th International Heat Transfer Conference, V. VII, T. 3.1, Elsevier Publishing Co., Amsterdam, Holland, 1970.

Banks, P. J.; Close, D. J.; 1972, "Coupled Equilibrium Heat and Single Adsorbate Transfer in Fluid Flow Through a Porous Medium -II. Predictions for a Silica Gel Air-Drier Using Characteristic Chart", Chemical Engineering Science, Vol. 27, pp. 1157-1169.

Barker, J. M.; Kettleborough, C. F.; 1980, "The adiabatic adsorption-desorption characteristics of silica gel beds - part 1," ASME Winter Annual Meeting, Nov 1980. New York, NY: American Society of Mechanical Engineers, pp. 80-WA/Sol-30.

Barker, J. M.; Kettleborough, C. F.; 1980, "Adiabatic adsorption-desorption characteristics of silica gel beds--2. Curve fits," ASME Winter Annual Meeting, Nov 1980. New York, NY: American Socity of Mechanical Engineers, pp. 80-WA/Sol-31.

Barlow, R.; May 1981, "Analysis of solar desiccant systems and concepts," Active contractors' review meeting, Washington, DC, USA, Sep 1981. pp. 5, SERI/TP-631-1254 CONF-810912-6.

Barlow, R. S.; Dec 1982, Analysis of the Adsorption Process and of Desiccant Cooling Systems: A Pseudo-Steady-State Model for Coupled Heat and Mass Transfer, SERI/TR-631-1330. Solar Energy Research Inst., Golden, CO (USA).

Barlow, R. S.; Aug 1981, "Simple predictive model for performance of desiccant beds for solar dehumidification," 1981 international passive and hybrid cooling conference, Miami Beach, FL, USA, 11 Nov 1981. pp. 7, SERI/TP-631-1329 CONF-811109-1.

Barlow, R. S.; Jun 1983, Assessment of dehumidifier geometries for desiccant cooling systems, SERI/TR-252-1529. Solar Energy Research Inst., Golden, CO (USA).

Barlow, R.; Collier, K.; Mar 1981, "Optimizing the performance of desiccant beds for solar-regenerated cooling," Annual conference of the International Solar Energy Society, Philadelphia, PA, USA, 26 May 1981. pp. 5, SERI/TP-631-1157 CONF-810509-28.

Barrer, R. M.; 1978, Zeolites and Clay Minerals as Sorbents and Molecular Sieves, New York, NY: Academic Press.

Bartz, D.; Zografos, A.; Marsala, J.; Oct 89, Integrated Gas-Fired Desiccant Dehumidification Vapor Compression Cooling System for Residential Application. Phase 2. Final Report, December 1987-December 1988, TR4477-142-89; GRI-89/0218. Tecogen, Inc., Waltham, MA.

Basmadjian, D.; 1975, "Possibility of omitting the cooling step in thermal gas adsorption cycles", Can. J. Chem. Eng, Vol. 53, No. 2; pp. 234-8.

Bassols-Rheinfelder, J.; 13 Dec 82, Experimental and Numerical Studies on an Open Adsorption System for Solar Space-Cooling Diss. (Dr.-Ing.), NP-5770024. Technische Hochschule, Aachen (Germany, F.R.). Fakultaet fuer Maschinenwesen.

Bassols-Rheinfelder, J.; 1985, "Solar cooling using an open-cycle adsorption system with adiabatical mass transfer and external heat exchange", Sol. Energy, Vol. 35, No. 1; pp. 93-104.

Beba, S.; Cler, G.; Löf, G. O. G; 1986, "Performance of a solar desiccant cooling system," ASES 86. Proceedings of the 1986 Annual Meeting, Boulder, CO, 11-14 Jun 1986. Boulder, CO: American Solar Energy Society, pp. 228-231.

Beckman, W. A.; Nov 1977, "Ingenuity and experiment are needed to advance solar cooling", Sunworld (Australia), Vol. 6, pp. 2-6.

Beckman, W. A.; Duffie, J. A.; Klein, S. A.; Mitchell, J. W.; Oct 1978, "Systems analysis of solar cooling process for residential systems," 3rd workshop on the use of solar energy for the cooling of buildings, San Francisco, CA, USA, 15 Feb 1978. pp. 334-338, CONF-780249.

Belding, W. A.; Collier, R. K.; Fraioli, A. V.; Lavan, Z.; Worek, W. M.; Jan 89, Development of Desiccant Materials for Cooling System Applications, Phase 1. Final Report, October 1987-November 1988, 1523234 PB91-159582/XAB GRI-88/0343. LaRoche Chemicals, Inc., Pleasanton, CA. 099304000.

Belding, W. A.; Novosel, D.; 1989, Development of Desiccant Materials for Cooling System Applications, GRI Contract No. 5087-293-1521. Chicago, IL: Gas Research Institute.

Belding, W. A.; Worek, W. M.; Novosel, D.; Holeman, W. D.; 1991, "Desiccant development for gas-fired desiccant cooling systems," ASHRAE Winter Meeting - Technical Papers. ASHRAE Transactions pt 1. Publ by ASHRAE, Atlanta, GA, USA., New York, NY, USA, 1991 Jan 19-23. pp. 587-594.

Berg, C. A.; Filed date 10 Oct 1978 29 Apr 1980, Modular solar powered heat pump Patent, U. S. Patent #4,199,952.

Berg, C. A.; Filed date 10 Oct 1978 4 Nov 1980, Solar powered heat pump construction Patent; silica gel adsorbent with solar regenerator, U. S. Patent #4,231,772.

Bharathan, D.; Parsons, J.; Maclaine-cross, I.; 1986, "Experimental Results on Advanced Rotary Desiccant Dehumidifiers," 3rd Annual Conference on Improving Building Energy Efficiency in Hot and Humid Climates, Arlington, TX, USA, 17-19 Nov 1986. pp. 10, SERI/TP-252-2989 CONF-861181-1.

Bharathan, D.; Parsons, J. M.; Maclaine-cross, I. L.; November 1987, Experimental Studies of Heat and Mass Exchange in Parallel-Passage Rotary Desiccant Dehumidifiers for Solar Cooling Applications, SERI/TR-253-2897. Solar Energy Research Institute. Golden, CO (USA).

Bharathan, D.; Parsons, J. M.; Maclaine-cross, I. L.; Nov 1987, Experimental study of an advanced silica gel dehumidifier, SERI/TR-252-2983. Solar Energy Research Inst., Golden, CO (USA).

Bilgen, E.; 1976, "Solar cooling Applications of solar energy," Solar energy seminar, Saskatoon, Saskatchewan, Canada, 26 Mar 1976. Regina, Sasketchewan: Canadian Plains Research Center, pp. 65-84.

Bilgen, E.; 1979, Solar energy conversion: an introductory course, New York, NY: Pergamon Press. pp. 1223-1243.

Bingham, C. E.; Pesaran, A. A.; 1989, "Measurement Uncertainty of Adsorption Testing of Desiccant Materials," 11th Annual American Society of Mechanical Engineers Solar Energy Conference. Solar Engineering - 1989, San Diego, CA (USA), 2-5 Apr 1989. New York, NY: American Society of Mechanical Engineers, pp. 457-464,544.

Biswas, P.; Feb 1983, Experimental study of the performance of a laminar flow silica gel desiccant packing suitable for solar air conditioning application, UCLA-ENG-8311. California Univ., Los Angeles (USA). School of Engineering and Applied Science.

Biswas, P.; Mills, A. F.; Kim, S.; May 1984, "A compact low-pressure drop desiccant bed for solar air conditioning applications: Analysis and design", Journal of Solar Energy Engineering, Vol. 106, No. 2; pp. 153-158.

Bokserman, Yu I.; Polyanskii, R. P.; 29 Apr 65, Liquefaction of Natural Gas, FTD-TT-64-1271; TT-65-62246. Foreign Technology Div Wright-Patterson AFB Ohio.

Boon-Long, P.; Szokolay, S. V.; 1983, "Experimental results on a solar-assisted dehumidification system using solid desiccant," Solar world congress. Vol. 1, Perth, Australia, 15 Aug 1983. Oxford, England: Pergamon Press, pp. 375-379.

Booz-Allen and Hamilton, Inc; Jan 82, Competitive Assessment of Desiccant Solar/Gas Systems for Single Family Residences Final rept. Aug 81-Jan 82, GRI-81/0063. Booz-Allen and Hamilton, Inc.,Bethesda, MD.

Boussemaere, C.; Bougard, J.; 1986, "Solar thermal refirgerator for vaccine storage and icemaking," INTERSOL 85: Proceedings of the Ninth Biennial Congress of the International Solar Energy Society, Jun 23-29 1985. New York, NY, USA: Pergamon Press, pp. 754-758.

Bowen, A.; Martinez, A. R. (ed.); 1981, "Thermodynamic humidity control through architecture," 1st international solar cooling and dehumidifying conference, Caracas, Venezuela, 3 Aug 1980. Oxford, England: Pergamon Press Ltd., pp. 185.

Bowlen, K.; Kosar, D.; 1989, Development of Desiccant Based Air Conditioning Systems, GRI Contract No. 5083-243-0839. Chicago, IL: Gas Research Institute.

Bowlen, K. L.; Manley, D. L.; Calton, D. S.; Sep 1988, Development and field test of a desiccant-based air conditioning system for supermarkets. Final report, October 1983-May 1988, PB-89-167464/XAB. Cargocaire Engineering Corp., Amesbury, MA (USA).

Brandemuehl, M. J.; 1982, Analysis of Heat and mass Regenerators with Time Varying of Spatially Nonuniform Inlet Conditions, PhD Thesis, Madison, WI: Univ. of Wisconsin - Madison.

Brandemuehl, M. J.; Banks, P. J.; 1984, "Rotary Heat Exchangers with Time Varying or Nonuniform Inlet Temperatures", Journal of Heat Transfer, Vol. 106, pp. 750-758.

Brotherton, T. K. Jr.; 1983, "Building applications - heating and cooling," Proceedings of the fourth SOLERAS workshop on solar thermal collectors, Denver, CO, USA, 1 Apr 1983. pp. 10-19, MRI/SOL-1301 CONF-8304199.

Brusewitz, G. H.; 1983, "Animal environment dehumidification with a rotating desiccant bed," 1983 Winter Meeting - American Society of Agricultural Engineers, Dec 13-16 1983. St. Joseph, Michigan, USA: ASAE, pp. 1-21.

Brusewitz, G. H.; Sharma, A. D.; 1982, "Animal environment dehumidification with a variable-depth sorption bed," 1982 Winter Meeting - American Society of Agricultural Engineers, Dec 14-17, 1982. St. Joseph, Michigan, USA: ASAE, pp. 1-19.

Brusewitz, Gerald H.; Stone, Marvin L.; Mar-Apr 1987, "Microcomputer controlled desiccant dehumidifier", Transactions of the American Society of Agricultural Engineers (General Edition), Vol. 30, No. 2; pp. 459-463.

Buchberg, H.; Lassner, N.; 1978, "Performance of an experimental regenerative-evaporative cooler compared with predictions," Energy conservation in heating, cooling, and ventilating buildings: heat and mass transfer techniques and alternatives, Dubrovnik, Yugoslavia, 29 Aug 1977. Washington, DC: Hemisphere Publishing Corp., pp. 629-640.

Bugaj, A. H.; Hahne, E.; 1985, "Analysis of a thermochemical energy storage system with liquid absorbents," ENERSROCK '85 - 3rd International conference on energy storage for building heating and cooling. Proceedings, Toronto, Canada, 22 Sep 1985. pp. 426-431, ITL-8509 CONF-850905-MICROLOG-89-00267.

Bullock C.E.; Threlkeld J.L.; 1966, "Dehumidification of Moist Air by Adiabatic Adsorption", Trans. American Society of Heating, Refrigerating and Air-Conditioning Engineers, Vol. 72, pp. 301-313.

Bullock, Charles Ernest; 1965, Dehumidification of moist air by adiabatic adsorption, PhD Thesis, Minneapolis, MN: Univ. of Minnesota.

Burns, P. R.; 1985, An analysis of hybrid desiccant cooling systems in supermarket applications, MS Thesis, Madison, WI: Univ. of Wisconsin - Madison.

Burns, P. R.; Mitchell, J. W.; Beckman, W. A.; 1985, "Hybrid desiccant cooling systems in supermarket applications", ASHRAE Transactions: Technical Papers presented at the 1985 Winter Meeting, Vol. 91, No. 1B; pp. 457-468.

Burns, P. R.; Mitchell, J. W.; Beckman, W. A.; 1985, "Solar hybrid desiccant cooling systems in supermarket applications," INTERSOL '85 - Solar energy--the diverse solution. Proceedings of the ninth biennial congress of the International Solar Energy Society, Montreal, Canada, 23 Jun 1985. Elmsford, NY: Pergamon Books Inc., pp. 700-706.

Buschulte, T. K.; 1984, Analysis of hybrid liquid desiccant cooling systems, MS Thesis, Madison, WI: Univ. of Wisconsin - Madison.

Buschulte, T. K.; Klein, S. A.; 1985, "Analysis of a hybrid liquid desiccant cooling system," INTERSOL '85 - Solar energy--the diverse solution. Proceedings of the ninth biennial congress of the International Solar Energy Society, Montreal, Canada, 23 Jun 1985. Elmsford, NY: Pergamon Books Inc., pp. 694-699.

Cairns, E. J.; Wahlig, M. A.; Mar 1988, Applied Science Division annual report: Building Energy Systems Program, FY 1987, LBL-24214. Lawrence Berkeley Lab., CA (USA).

Calton, Dean S.; 1985, "Application of a desiccant cooling system to supermarkets", ASHRAE Transactions: Technical Papers presented at the 1985 Winter Meeting, Vol. 91, No. pt 1B; pp. 441-446.

Campbell, J.; Lush, D. M.; Moss, J. G. G; 1983, Study and evaluation of the latent cooling potential of chemical de-humidifiers. Final report, PB-83-170936. Commission of the European Communities, Luxembourg.

Cargocaire Engineering Corporation; 1982, The dehumidification handbook, Amesbury, MA.

Carmi, Y.; Korin, E.; Borde, I.; 1990, "Heat and mass transfer in a solid desiccant dehumidifier: theoretical model and experimental results", Sci. Tech. Froid, No. 1, Propr. Thermophys. Frigorigenes Purs Melange; pp. 257-62.

Carmi, Y.; Korin, E.; Borde, I.; Sayigh, A. A. M.; 1991, "Utilization of low grade energy sources for air-conditioning using solid-desiccant material Energy conservation in buildings: the achievement of 50% energy saving: an environmental challenge," Proceedings of NORTHSUN 90, an international conference, Reading (United Kingdom), 18-21 Sep 1990. Oxford (GB) Pergamon Press, pp. 401-405.

Carter, J. W.; 1968, "Isothermal and Adiabatic Adsorption in fixed Beds", Trans. Instn. Chem. Engrs., Vol. 46, pp. 213-221.

Carter, J. W.; 1966, "A Numerical Method for Prediction of Adiabatic Adsorption in Fixed Beds", Trans. Instn. Chem. Engrs., Vol. 44, pp. 253-259.

Carter, J. W.; Husain, H.; Jan 1974, "Simultaneous adsorption of carbon dioxide and water vapour by fixed beds of molecular sieves", Chemical Engineering Science, Vol. 29, No. 1; pp. 267-273.

Center for the Environment and Man, Inc Hartford, CT (USA); 24 Jul 1981, Solar powered desiccant air conditioning system. Final report, DOE/CS/52702-T1 DOE/CS-34286. Center for the Environment and Man, Inc., Hartford, CT (USA).

Chang, S. C.; Roux, J. A.; 1985, "Thermodynamic Analysis of a Solar Zeolite Refrigeration System", Journal of Solar Energy Engineering, Vol. 107, pp. 189-195.

Charan, V.; Varma, H. K.; Chander, Maj R.; May 5 1977, "Use of a dehumidifier and heat exchanger with an evaporative cooler", Journal of the Institution of Engineers (India), Part ME: Mechanical Engineering Division, Vol. 57, pp. 266-272.

Charoensupaya, D.; 1986, Experimental and analytical investigations of composite desiccant structures and low humidity adsorption, PhD Thesis, Chicago, IL: Illinois Institute of Technology.

Charoensupaya, D.; Worek, W. M.; Lavan, Z.; 1987, "Effect of heat and mass transfer properties on desiccant dehumidifier and cooling system performance," ASME winter meeting. Solar energy technology SED-Vol. 4, Boston, MA, USA, 13 Dec 1987. New York, NY: American Society of Mechanical Engineers, pp. 41-48.

Charoensupaya, D.; Worek, W. M.; 1988, "Effect of adsorbent heat and mass transfer resistances on performance of an open-cycle adiabatic desiccant cooling system", Heat Recov. Syst. CHP (United Kingdom), Vol. 8, No. 6; pp. 537-548.

Charoensupaya, Dhanes; Worek, William M.; 1988, "Parametric study of an open-cycle adiabatic, solid, desiccant cooling system", Energy (Oxford), Vol. 13, No. 9; pp. 739-47.

Chase, C. A.; Gidaspow, D.; Peck, R. E.; 1969, "Adiabatic adsorption in a regenerator", Chem Eng Progr Symp Ser, Vol. 65, No. 96; pp. 34-47.

Chau, K. V.; 1982, "Grain aeration with air conditioned by a desiccant," 1982 Summer Meeting - American Society of Agricultural Engineers, St. Joseph, Michigan, USA: ASAE, pp. 1-10, Pap 82-3013.

Chebbah, A.; 1987, Analysis and design of a solar-powered liquid-desiccant air conditioner for use in hot and humid climates, PhD Thesis, Gainesville, FL: Univ. of Florida.

Chen, L. C.; Kao, F. K.; Horigome, T.; Kimura, K.; Takakura, T.; Nishino, T.; Fujii, I.; 1990, "The experimental study of three types of regenerator/collector for solar liquid desiccant cooling," Clean and Safe Energy Forever. V. 1 - World congress of the International Solar Energy Society, Kobe (Japan), 4-8 Sep 1989. Oxford (GB) Pergamon Press, pp. 840-844.

Chen, Ruey-Feng; 1988, Assessments of desiccant cooling systems, MS Thesis, Reno, Nevada: Univ. of Nevada.

Chen, L. C.; Kuo, C. L.; Shyu, R. J.; 1989, "The performance of a packed bed dehumidifier for solar liquid desiccant systems," 11. annual American Society of Mechanical Engineers solar energy conference. Solar engineering - 1989, San Diego, CA (USA), 2-5 Apr 1989. New York, NY: American Society of Mechanical Engineers, pp. 371-378.

Chi, C. W.; Wasan, D. T.; 1970, "Fixed Bed Adsorption Drying", AIChE Journal, Vol. 16, No. 1; pp. 23-31.

Choi, K. H.; Kimura, K.; Horigome, T.; Kimura, K.; Takakura, T.; Nishino, T.; Fujii, I.; 1990, "Experiments of a dryness storage tank in a solar heated dehumidifying/drying system of open cycle absorption type," Clean and Safe Energy Forever. V.1 - World congress of the International Solar Energy Society, Kobe (Japan), 4-8 Sep 1989. Oxford (GB) Pergamon Press, pp. 860-864.

Choi, M. K. W.; 1987, "Simplified method for evaluating solar desiccant cooling systems performance," ASME/JSME/ISES solar energy conference. Solar engineering - 1987, Honolulu, HI, USA, 22 Mar 1987. New York, NY: American Society of Mechanical Engineers, pp. 114-122.

Chuah, Y. K.; Norton, P.; Kreith, F.; 1989, "Transient mass transfer in parallel passage dehumidifiers with and without solid side resistance", J. Heat Transfer, Vol. 111, No. 4; pp. 1038-44.

Clark, G.; Loxsom, F.; Doderer, E.; Vieira, R.; Fleischhacker, P.; Nov 1983, Energy and peak power saved by passively cooled residences, N-84-26130. Trinity Univ., San Antonio, TX (USA).

Clark, J. E.; 1979, Design and construction of thin, adiabatic desiccant beds with solar air conditioning applications, MS Thesis, Los Angeles, CA: Univ. of California.

Clark, J. E.; Mills, A. F.; Buckberg, H.; May 1981, "Design and Testing of Thin Adiabatic Desiccant Beds for Solar Air Conditioning Applications", J. Sol. Energy Eng., Vol. 103, No. 2; pp. 89-91.

Close, D. J.; Banks, P. J.; 1972, "Coupled Equilibrium Heat and Single Adsorbate Transfer in Fluid flow through a Porous Medium - II Predictions for a Silica-Gel Air-Drier using Characteristic Charts", Chem. Engng Sci, Vol. 27, pp. 1157-1168.

Close, D. J.; Sheridan, J. C.; 1982, "Low energy cooling for humid regions," TASCON '82, Papers Presented at the AIRAH Conference (Australian Institute of Refrigeration Air Conditioning and Heating), Hobart, Tasmania, Aust: Australian Inst of Refrigeration Air Conditioning & Heating, Tasmanian Div., pp. 8. 3-8. 10.

Coellner, J. A.; 1980, "Energy Conservation Techniques for use in Rotary Solid Sorption Dehumidification Systems", ASHRAE Trans., Vol. 86, No. 1; pp. 1022-1026.

Coellner, J. A.; 1980, "Energy Conservation techniques for use in Rotary Solid Sorption Dehumidification Systems", ASHRAE Journal, Vol. 22, April 1980, No. 4; pp. 42-44.

Coellner, J. A.; 1986, "Energymaster - Desiccant Cooling in the Marketplace," Proceedings of the Desiccant Cooling and Dehumidification Opportunities for Buildings Workshop, Chattanooga, TN, June 10-11, 1986.

Coellner, J. A.; Mar 1986, "Energymaster - desiccant cooling in the marketplace," 13th annual energy technology conference and exposition (ET '86). Energy Technology, Washington, DC, USA, 17 Mar 1986. pp. 1210-1213.

Cohen, B. M.; Slosberg, R. B.; 1988, "Application of Gas Fired Desiccant Cooling Systems", ASHRAE Trans., Vol. 94, No. 1; pp. 525-536.

Cohen, B.; Arora, R.; Chapp, T.; Manley, D.; Sarkisian, P.; May 87, Advanced Desiccant Cooling System Development. Design, Features, and Applications. September 1984-March 1987, 1491034 PB91-101881/XAB TE4315-123-86; GRI-87/0043.1. Tecogen, Inc., Waltham, MA. 089038000. pp. 42.

Cohen, B. M.; Levine, A. H.; Arora, R.; Feb 1983, Field development of a desiccant-based space-conditioning system for supermarket applications. Annual report, February 1982-January 1983, PB-83-251017 TE-4308-42-83. Thermo Electron Corp., Waltham, MA (USA).

Cohen, B.; Manley, D.; Popelka, A.; Sarkisian, P.; Slosberg, R.; Oct 88, Advanced Desiccant Cooling System Development. Manufacturing Costs and Application Economics. Topical Report, September 1984-September 1987, 1491035 PB91-101899/XAB TR4315-058-89; GRI-87/0043.2. Tecogen, Inc., Waltham, MA. 089038000. pp. 150.

Cohen, B. M.; Manley, D. L.; Arora, R.; Levine, A. H.; Jun 84, Field Development of a Desiccant-Based Space-Conditioning System for Supermarket Applications Final rept. Feb 82-Jun 84, TE4308-39-84; GRI-84/0111. Thermo Electron Corp., Waltham, MA.

Cohen, B.; Ross, M.; Wysk, R.; Popelka, A.; Sarkisian, P.; Dec 88, Advanced Desiccant Cooling System Development. Small Commercial Laboratory Prototypes Testing. Topical Report, December 1987-July 1988, 1491036 PB91-101907/XAB TR4315-075-89; GRI-87/0043.3. Tecogen, Inc., Waltham, MA. 089038000. pp. 115.

Cohen, B.; Ross, M.; Arora, R.; Swanson, J.; Sarkisian, P.; Jul 90, Advanced Desiccant Cooling System Development. Final Report, September 1982-June 1990, 1491045 PB91-102004/XAB GRI-90/0213. Tecogen, Inc., Waltham, MA. 089038000. pp. 89.

Cohen, B. M.; Slosberg, R. B.; 1989, "Application of gas-fired desiccant cooling systems", Energy Engineering: Journal of the Association of Energy Engineers, Vol. 86, No. 4; pp. 10-25.

Cohen, B.; Wysk, R.; Slosberg, R.; Mar 1989, Advanced desiccant-cooling-system development. Desiccant wheel sample performance testing. Topical report, January 1987-May 1988, PB-89-189393/XAB TR-4315-040-89. TECOGEN, Inc., Waltham, MA (USA).

Cohen, Barry M.; Collier, Robert K., Jr.; Levine, Andy H.; Dibella, Francis A.; 8 Mar 1988, Nonuniform regeneration system for desiccant bed, U. S. Patent #4,729,774.

Collier, R. K.; 1982, "Desiccant cooling workshop," Annual DOE Active Solar Heating and Cooling Contractors' Review Meeting: Proceedings and Project Summaries, Sep 9-11 1981. Washington, DC, USA: DOE, pp. 14. 7, CONF-810912.

Collier, R. K.; 1978, "Analysis of an improved solar-powered cooling system utilizing open-cycle absorbent regeneration," Meeting of the American Section of the International Solar Energy Society, Denver, CO, USA, 28 Aug 1978. pp. 6, LA-UR-78-1663 CONF-780808-10.

Collier, R. K.; 1980, "Desiccant and other cooling systems," SOLERAS - Solar cooling. Proceedings of the first SOLERAS workshop, Dhahran, Saudi Arabia, 1 Apr 1980. Kansas City, MO: Midwest Research Institute, pp. 89-106, MRI/SOL-0601 CONF-8004244.

Collier, R. K.; Jan 1988, Advanced desiccant materials assessment. Phase 2. Final report, November 1986-January 1988, PB-88-217054/XAB. Enerscope, Inc., Glendale, AZ (USA).

Collier, R. K.; 1989, "Desiccant Properties and Their Affect on Cooling System Performance", ASHRAE Transaction, Vol. 95, No. 1; pp. 823-827.

Collier, R. K. Jr; 1987, "On the theoretical performance of open cycle desiccant cooling systems," American Society of Mechanical Engineers winter meeting, Anaheim, CA, USA, 7 Dec 1986. New York, NY: American Society of Mechanical Engineers, pp. 3.

Collier, R. K.; Barlow, R. S.; Arnold, F. H.; Feb 1982, "Overview of Open-Cycle Desiccant-Cooling Systems and Materials", Journal of Solar Energy Engineering, Vol. 104, No. 1; pp. 28-34, see also SERI/TP-631-1065.

Collier, R. K.; Cale, T. S.; Lavan, Z.; Apr 1986, Advanced desiccant materials assessment. Final report, February 1985-May 1986, PB-87-172805/XAB. Enerscope, Inc., Glendale, AZ (USA).

Collier, R. K.; Cohen, B. M.; 1988, "An analytical examination of methods for improving the performance of desiccant cooling systems," 10th annual American Society of Mechanical Engineers solar energy conference. Solar engineering - 1988, Denver, CO, USA, 10 Apr 1988. New York, NY: American Society of Mechanical Engineers, pp. v.

Collier, R. K.; Cohen, B. M.; 1991, "Analytical examination of methods for improving the performance of desiccant cooling systems", Journal of Solar Energy Engineering, Transactions of the ASME, Vol. 113, No. 3, Aug 1991; pp. 157-163.

Collier, R. K.; Cohen, B. M.; 1989, "Desiccant properties and their effects on the performance of desiccant colling systems," 1989 International Gas Research Conference, Tokyo, Japap, November 6-9, 1989. Rockville, MD (US); Government Institutes, Inc.: pp. 272-281.

Collier, R. K.; Novosel, D.; Worek, W. M.; 1990, "Performance Analysis of Open-Cycle Desiccant Cooling Systems", ASHRAE Transasction, Vol. 96, No. 1; pp. 1262-1268.

Colorado State Univ., Fort Collins Solar Energy Applications Lab.; Jan 90, Colorado State University program for developing, testing, evaluating and optimizing solar heating and cooling systems. Project status report, November-December 1989 Progress rept, DOE/SF/16306-19. Colorado State Univ., Fort Collins. Solar Energy Applications Lab.

Colorado State Univ., Fort Collins, CO (USA). Solar Energy Applications Lab.; May 1990, Colorado State University program for developing, testing, evaluating and optimizing solar heating and cooling systems Project status report for the months of March and April 1990, DOE/SF/16306-21. Colorado State Univ., Fort Collins, CO (USA). Solar Energy Applications Lab.

Colorado State Univ., Fort Collins, CO (USA). Solar Energy Applications Lab; 5 Mar 1990, Developing, testing, evaluating and optimizing solar heating and cooling systems Project status report, January 1, 1990--February 28, 1990, DOE/SF/16306-20. Colorado State Univ., Fort Collins, CO (USA). Solar Energy Applications Lab.

Copeland, R. J.; 1982, "Systems analysis of thermal storage," Proceedings of the 6th Annual Thermal and Chemical Storage Contractors' Review Meeting, Sep 14-16 1981. Silver Spring, Md, USA: MCC Assoc, pp. 365-371, CONF-810940.

Critoph, R. E.; 1988, "Performance limitations of adsorption cycles for solar cooling", Sol. Energy (United Kingdom), Vol. 41, No. 1; pp. 21-31.

Critoph, R. E.; Vogel, R.; Oct 1986, "Possible adsorption pairs for use in solar cooling", Int. J. Ambient Energy (United Kingdom), Vol. 7, No. 4; pp. 183-190.

Cromer, C. J.; 1988, Cooling System, U. S. Patent #4 719 761.

Cromer, C. J.; 1989, "Desiccant moisture exchange for dehumidification enhancement of air conditioners," Proceedings of Solar 89, the 14th national passive solar conference, Denver, CO (USA), 19-22 Jun 1989. New York, NY: American Solar Energy Society, pp. 401-408, 488.

Cromer, Charles J.; 1981, "Solar liquid desiccant air conditioning system: Preliminary report," Passive Cooling, International Passive and Hybrid Cooling Conference, Nov 6-16 1981. Newark, Del, USA: Am Sect of the Int Sol Energy Soc, pp. 296-300.

Crum, D. R.; 1986, Open cycle desiccant air conditioning systems, MS Thesis, Madison, WI: Univ. of Wisconsin - Madison.

Crum, D. R.; Mitchell, J. W.; Beckman, W. A.; 1987, "Advanced desiccant cycles," ASME/JSME/ISES solar energy conference. Solar engineering - 1987, Honolulu, HI, USA, 22 Mar 1987. New York, NY: American Society of Mechanical Engineers, pp. 841-847.

Curran, H. M.; 1982, "Hybrid refrigeration/sorption solar cooling systems," ASME solar energy conference. Solar engineering - 1982, Albuquerque, NM, USA, 26 Apr 1982. New York, NY: American Society of Mechanical Engineers, pp. 538-544.

Curran, H. M.; DeVries, J.; May 1981, Options for thermal energy storage in solar-cooling systems. Final report, DOE/CS/30202-T2 H-C-1007/060-80-976. Hittman Associates, Inc., Columbia, MD (USA).
Czanderna, A. W.; December 1988, Polymers as Advanced Materials for Desiccant Applications: 1987, SERI/PR-255-3308. Solar Energy Research Institute Golden, CO.

Czanderna, A. W.; 1989, "Polymers as Advance Materials for Desiccant Applications: 1. Commercially Available Polymers," ASHRAE Annual Symposium. ASHRAE Transactions, In Press, Vancouver, B.C., Canada, 28 June 1989. Atlanta, GA: American Society of Heating, Refrigerating and Air-Conditioning Engineers, Vol 95, No. 2, pp. 1090-1108.

Czanderna, A. W.; Dec 1990, Polymers as advanced materials for desiccant applications, SERI/TP-213-3608 DE90000389. Solar Energy Research Inst., Golden, CO (USA) 9506687. pp. 88.

Czanderna, A. W.; Neidlinger, H. H.; Sep 90, Polymers as advanced materials for desiccant applications, 1988, 1500571 DE90000385/XAB SERI/PR-255-3443. Solar Energy Research Inst., Golden, CO.

Czanderna, A. W.; Neidlinger, H. H.; 1991, "Polymers as Advanced Materials for Desiccant Applications - 2 - Alkali Salts of Polyestyrene Sulfonic Acid", ASHRAE Transactions, Vol. 97, No. 2; pp. 615-623.
Czanderna, A. W.; Thomas, T. M.; May 1986, Advanced desiccant materials research, SERI/PR-255-2887. Solar Energy Research Inst., Golden, CO (USA).

Czanderna, A. W.; Thomas T.M.; June 1987, Advanced Desiccant Materials Research--1986, SERI/PR-255-3102. Solar Energy Research Institute Golden, CO.

Czanderna, A. W.; Thomas, T. M.; June 1986, "Polymers: Options as Advanced Desiccant Materials," Conference Proceedings of a Workshop on Desiccant Cooling and Dehumidification Opportunities for Buildings, Chattanooga, TN, 10 June 1986. SERI/CP-254-3000.

Czanderna, A. W.; Thomas T.M.; 1987, "A Quartz Crystal Microbalance Apparatus for Water Sorption by Polymers", Journal of Vacuum Science Technology, Vol. A5, No. 2412.

Davidson, K.; 1987, "An emerging energy saving gas technology - Desiccant-based space conditioning systems", Strategic Plan. Energy Manage. (United States), Vol. 7, No. 1; pp. 53-59.

Davidson, K. G.; Kosar, D. R.; Epstein, M.; Grolmes, M. A.; 1983, "Analysis of advanced desiccant cooling systems 1983 international gas research conference," International gas research conference, London, UK, 13 Jun 1983. Rockville, MD: Government Institutes, Inc., pp. 726-740.

Davidson, K. G.; Sep 1987, "Advances in HVAC alternatives", Heating, Piping & Air Conditioning, Vol. 59, No. 9; pp. 59-68.

Davis, M. M.; 1987, Studies on the optimal thermal regeneration of adsorption beds, PhD Thesis, Charlottesville, VA (US): Univ. of Virginia.

de Winter, Francis; 1974, "Workshop Proceedings on Solar Cooling for Buildings," Semi-Annual Meeting of the American Society of Heating, Refrigerating and Air Conditioning Engineers (ASHRAE), Los Angeles, California, Feb 6-8 1974. pp. 241.

DeVries, J.; 1980, "Thermal energy storage design criteria," Energy Technology. Proceedings of 7th energy technology conference. Expanding supplies and conservation, Washington, DC, USA, 24 Mar 1980. Washington, DC: Government Institutes, Inc., pp. 1181-1189.

DeVries, J.; 1982, "Thermal energy storage for solar cooling systems," 4th Miami international conference on alternative energy sources, Miami Beach, FL, USA, 14 Dec 1981. Coral Gables, FL: Univ. of Miami, pp. 33-34.

Diamond, S.; Packard, C.; 1976, "Solar heated and cooled office building," Joint conference of the American Section of the International Solar Energy Society and The Solar Energy Society of Canada, Inc. Sharing the Sun: solar technology in the seventies. Volume 3, Winnipeg, Manitoba, Canada, 15 Aug 1976. Cape Canaveral, FL: American Section of the International Solar Energy Society, pp. 99-105, CONF-760842--P3.

DiBella, F.; Patch, K.; Becker, F.; Oct 1989, Desiccant-based, heat actuated cooling assessment for DHC systems, May 1-July 31, 1989, Quarterly Rpt No.1 DOE/CE/26593-T1. TECOGEN, Inc., Waltham, MA.
Dini, S.; Lavan, Z.; Gidaspow, D.; 1982, "Effect of sorption properties on desiccant dehumidifier performance," Proceedings of Condensed Papers - 16th Southeastern Seminar on Thermal Sciences, Apr 19-21 1982. Coral Gables, Fla, USA: Univ of Miami, Clean Energy Research Inst, pp. 158-159.

Dini, S.; Worek, W. M.; 1986, "Sorption equilibrium of a solid desiccant felt and the effect of sorption properties on a cooled-bed desiccant cooling system", J. Heat Recovery Syst, Vol. 6, No. 2; pp. 151-67.
Dini, Said; 1981, Analysis of cross-cooled Desiccant cooling systems, PhD Thesis, Chicago, IL: Illinois Institute of Technology.

Dolan, William H.; 1989, "Desiccant cooling systems - a new HVAC opportunity", Energy Engineering: Journal of the Association of Energy Engineers, Vol. 86, No. 4; pp. 6-9.

Douss, N.; Meunier, F.; 1989, "Experimental study of cascading adsorption cycles", Chemical Engineering Science, Vol. 44, No. 2; pp. 225-235.

Dovletov, D.; 1971, "Design of a lithium bromide solar air-conditioning installation", Izv. Akad. Nauk Turkm. SSR, Ser. Fiz.-Tekh., Khim. Geol. Nauk (USSR), Vol. 5, pp. 46-50.

Drewry, J.; 1985, "Gas Research Institute Space Conditioning Research Program New energy technologies for Illinois and the midwest," 13th annual Illinois energy conference, Chicago, IL, USA, 28 Oct 1985. Springfield, IL: Illinois Dept. of Energy and Natural Resources, pp. 71-90.

Drucker, E. E.; Ucar, M.; LaGraff, J. E.; May 1978, Commercial building unitary heat pump system with solar heating. Final report, May 1, 1976--October 31, 1977, COO-2979-2. Syracuse Univ., NY (USA).

Duff, W. S.; 1988, "Advances in research and development in domestic heating and cooling systems," V. 1. Proceedings of the biennial congress of the International Solar Energy Society. Advances in solar energy technology, Hamburg, F.R. Germany, 13-18 Sep 1987. Oxford, GB: Pergamon Press, pp. 471-479.

Duffie, J. A.; Beckman, W. A.; 1976, "Review of solar cooling," Sharing the Sun: solar technology in the seventies. Volume 3 Sorption and mechanical cooling, Winnipeg, Manitoba, Canada, 15 Aug 1976. Cape Canaveral, FL: American Section of the International Solar Energy Society, pp. 13-26, CONF-760842--P3.

Duffie, J. A.; Mitchell, J. W.; 1980, "Systems evaluation study of solar desiccant cooling systems," Proceedings of the annual DOE active solar heating and cooling contractors' review meeting, Lake Tahoe, NV, USA, 26 Mar 1980. pp. 3.14-3.16, CONF-800340.

Duffie, John A.; Mitchell, John W.; 1982, "Component and system evaluation study of solar desiccant cooling," Annual DOE Active Solar Heating and Cooling Contractors' Review Meeting: Proceedings and Project Summaries, Sep 9-11 1981. Washington, DC, USA: Publ by DOE, pp. 3. 28-3. 30, CONF-810912.

Dunkle, R. V.; 1965, "A Method of Solar Air Conditioning," Mechanical Chemical Engineering Trans. Inst. Engineers, August 1, 1965. pp. 73-78.

Dupont, M.; 1980, "Second law analysis of a solid adsorption cycle for a solar refrigerator," Proceedings of the first SOLERAS workshop. SOLERAS - Solar cooling., Dhahran, Saudi Arabia, 1 Apr 1980. pp. 251-254, MRI/SOL-0601 CONF-8004244.

Dupont, M.; Nguyen, P. H.; Meunier, F.; 1983, "Study of solar solid adsorption ice-maker using 13 X zeolite - water couple in tropical climate," 17. conferences of the Pan american confederation of Engineering Association. 1st Pan American conference on energy and 2nd National conference on renewable energy technologies; proceedings. Volume 1, San Juan, Puerto Rico, 1 Aug 1982. pp. vp, CEER-X-163 CONF-8208212-Vol.1.

Dupuy, G.; 1980, Optimization of Adsorbate-Absorbent Couples. Final Report, EUR-6742-FR. Rhone-Poulenc S.A., Paris (France).

Ebrahim, M. A.; 1987, "Investigation of cooling produced by coupling desiccant dehumidification and evaporative cooling for a residence in the hot and humid climate of Karachi, Pakistan," Book of abstracts. Vol. 2. ISES solar world congress 1987: Advances in solar energy technology, Hamburg, F.R. Germany, 13 Sep 1987. pp. 6.4.22, CONF-870903-Vol.2-Absts.

Ebrahim, M. A.; 1988, "Investigation of cooling for a hot humid climate: desiccant dehumidification coupled with evaporative cooling for a residence in Karachi, Pakistan," Advances in solar energy technology. V. 3. Proceedings of the biennial congress of the International Solar Energy Society, Hamburg, F.R. Germany, 13-18 Sep 1987. Oxford, GB: Pergamon Press, pp. 2653-2657.

Energy Materials Research Co., Berkeley CA (USA); 1981, Development of switchable hygroscopic materials. Final technical report FY 1980-1981, DOE/SF/11506-T1. Energy Materials Research Co., Berkeley, CA (USA).

Epstein, M.; Davidson, K.; Grolmes, M.; Kosar, D.; 1983, "Advanced desiccant dehumidification/cooling technology," 6th annual ASME technical conference on commercial building heating and cooling applications, Orlando, FL, USA, 19 Apr 1983. New York, NY: ASME, pp. 398-407.

Epstein, M.; Davidson, K.; Grolmes, M.; Kosar, D.; Feb 1985, "Desiccant cooling system performance: A simple approach", J. Sol. Energy Eng. (United States), Vol. 107, No. 2; pp. 21-28.

Epstein, Michael; Grolmes, Michael A.; 1982, Desiccant cooling system performance: a simple approach, FAI-82/23; GRI-81/0089. Fauske and Assoc., Inc Burr Ridge, IL, USA.

Ertas, A.; Anderson, E. E.; Kavasogullari, S.; 1990, "Comparison of mass and heat transfer coefficients of liquid desiccant mixtures in a packed column," Winter Annual Meeting of the American Society of Mechanical Engineers. Solar Energy in the 1990s American Society of Mechanical Engineers, Solar Energy Division (Publication) SED v 10. Publ by ASME, New York, NY, USA. p 55-60,

Ertas, A.; Anderson, E. E.; Kiris, I.; Burley, S. M.; Coleman, M. J.; 1990, "Properties of a new liquid desiccant solution--lithium chloride and calcium chloride mixture Proceedings of the 1990 annual conference of the American Solar Energy Society, Inc," Solar '90: 19th American Solar Energy Society annual conference and 15th national passive solar conference, Austin, TX (USA), Mar 19-22, 1990. Boulder, CO (USA) American Solar Energy Society, pp. 535-540 (611 p).

Ertas, A.; Anderson, E. E.; Kavasogullari, S.; 1991, "Comparison of mass and heat transfer coefficients of liquid-desiccant mixtures in a packed column", Journal of Energy Resources Technology, Transactions of the ASME, Vol. 113, March 1991, No. 1; pp. 1-6.

Exell, R. H.; Bhattacharya, S. C.; Upadhyaya, Y. R.; Garg, H. P.; Dayal, M.; Furlan, G.; 1987, "Solar cooling for cold-storage applications using solid desiccants and adsorbents," International workshop on physics of solar energy. Physics and technology of solar energy. Volume 1. Solar thermal applications, New Delhi, India, 24 Nov 1986. Dordrecht, Netherlands: D. Reidel Publishing Co., pp. 405-411.

Factor, Haim M.; Grossman, G.; 1980, "A Packed Bed Dehumidifier/Regenerator for Solar Air Conditioning with Liquid Desiccants", Sol. Energy, Vol. 24, No. 6-C; pp. 541-50.

Fago, E. T. Jr; 17 Mar 1982, Solar energy applied to dehumidification and water heating in an integrated system, DOE/R7/01037-T1. Fago (Edward T., Jr.), Kansas City, MO (USA).

Fairey, P.; Kerestecioglu, A.; Vieira, R.; 30 Apr 1986, Analytical investigation of the desiccant enhanced nocturnal radiation cooling concept. Final report, FSEC-CR-152-86. Florida Solar Energy Center, Cape Canaveral (USA).

Fairey, P.; Vieira, R.; Kerestecioglu, A.; Wilson, A. T.; Glennie, W.; 1985, "Dessicant enhanced nocturnal radiation - A new passive cooling concept," SOLAR '85 - conference proceedings, Raleigh, NC, USA, 15 Oct 1985. Boulder, CO: American Solar Energy Society, pp. 271.

Fang, L. J.; Shyu, R. J.; Chuah, Y. K.; 1988, "Solar thermal energy research at Industrial Technology Research Institute," Advances in solar energy technology. V. 3. Proceedings of the biennial congress of the International Solar Energy Society, Hamburg, F.R. Germany, 13-18 Sep 1987. Oxford, GB: Pergamon Press, pp. 2809-2813.

Farooq, S.; Ruthven, D. M.; 1991, "Numerical simulation of a desiccant bed for solar air conditioning applications", J. Sol. Energy Eng, Vol. 113, No. 2; pp. 80-8.

Farwati, M. Adnan; 1985, "Some aspects of adsorption cooling using solar energy", Bull Tech Univ Istanbul, Vol. 38, No. 2; pp. 273-281.

Feustel, H.; de, Almeida A.; Blumstein, C.; Jan 1991, Alternatives to compressor cooling in California climates, LBL-30041 DE92000707. Lawrence Berkeley Lab., CA (United States) 9513034.

Finney, O.; Oct 1982, Underground-desiccant cooling system, DOE/R7/01162-T1. Finney (Oliver), Lawrence, KS (USA).

Fischer, J. C.; Jan 1991, Development of low-cost dehumidification and sensible-only energy-exchanger components for desiccant-based air-conditioning systems. Phase 1, Final report, December 1989-December 1990, PB-91-240689/XAB. SEMCO Mfg., Inc., Columbia, MD (United States) 9530081. (73 p).

Fitch, S. D.; 1980, "Solar and Sorption - An Energy Effective Alternative", ASHRAE Transactions, Vol. 86, No. 1; pp. 1027-1030.

Fleisher, W. L.; 1939, Adsorption System of Air Conditioning, U. S. Patent #2 147 248.

Fletcher, J. W.; McCormick, P. O.; 1980, "Economics of desiccant cooling and drying," National Estimating Society conference on energy economics of the 80's. Energy economics of the 80's, Huntsville, AL, USA, 8 Dec 1980. pp. 9, CONF-801230.

Florida Technological Univ.; FL Solar Energy Center; Arizona State Univ.; Apr 1981, Solar Technology Assessment Project. Volume IV. Solar air conditioning: Active, Hybrid and Passive, DOE/CS/30278-T5. Florida Technological Univ., Cape Canaveral (USA). FL Solar Energy Center; Arizona State Univ., Tempe (USA). Coll. of Architecture.

Flowers, L. T.; Groff, G. C.; 1989, "Application of solar technologies in buildings," 2nd world congress on heating, ventilating, refrigerating and air conditioning, Sarajevo (Yugoslavia), 27 Aug - 1 Sep 1989. pp. 10, CONF-890828-2.

Fraioli, A. V.; Mar 1983, Investigation of manganese dioxide as an improved solid desiccant, ANL-83-22. Argonne National Lab., IL (USA).

Fraioli, A. V.; 1987, "Mass transfer mechanisms for water adsorbed on silica gel," Proceedings of ASME winter meeting, Boston, MA, USA, 13 Dec 1987. pp. 8, CONF-871234-13.

Fraioli, A. V.; Jul 1985, "New concepts in desiccant manufacture," Solar buildings: realities for today - trends for tomorrow. Solar buildings conference: proceedings, Washington, DC, USA, 18 Mar 1985. pp. 284-287, CONF-850388.

Fraioli, A. V.; Schertz, W. W.; Filed date 30 Dec 1985 24 Feb 1987, Composite desiccant structure, U. S. Patent #4,645,519.

Fraioli, Anthony V.; 1984, "Characterization of the surfaces of manganese oxides by water adsorption", Prog. Batteries Sol. Cells, Vol. 5, pp. 147-50.

Fraioli, Anthony V.; 1984, "Water adsorption characteristics of manganese oxides," Extended Abstracts, Fall Meeting - Electrochemical Society, Oct 7-12 1984. Pennington, NJ, USA: Electrochemical Soc, pp. 106-107.

Fraioli, Anthony V.; Schertz, William W.; 1985, Composite desiccant structure, U. S. Patent #617,781.

Francis. C. E.; Beavers, D. R.; 1980, "Passive features for a liquid desiccant air conditioner," Proc Annu Meet Am Sect Int Sol Energy Soc AS/ISES 1980, Sol Jubilee 25 Years of the Sun at Work, Phoenix, Ariz, USA, Jun 2-6 1980. Newark, Del, USA: Am Sect of Int Sol Energy Soc, Inc, pp. 903-907.

Francis, C. E.; 1982, "Dual bed solid desiccant dehumidifier for use with passive hybrid cooling systems," Solar World Forum, Proceedings of the International Solar Energy Society Congress, Aug 23-28 1981. Oxford, Engl and New York, NY, USA: Pergamon Press, pp. 2147-2151.

Francis, C. E.; 1979, "Passive liquid desiccant air conditioner," 6th annual conference on energy. Annu. UMR-DNR Conf. Energy, (Proc.) (United States), Rolla, MO, USA, 16 Oct 1979. pp. 396-398.

Freeman, Clarence S.; 5 Oct 1989, Dehydrator utilizing water-absorbing polymers for air conditioning units, U. S. Patent #8,909,371.

Gandhidasan, P.; 1990, "Analysis of a solar space cooling system using liquid desiccants," Proceedings of the 25th Intersociety Energy Conversion Engineering Conference - IECEC '90. Proceedings of the Intersociety Energy Conversion Engineering Conference v 5. Publ by IEEE, IEEE Service Center, Piscataway, NJ, USA (IEEE cat n 90CH2942-1). p 162-166, Reno, NV, USA, 1990 Aug 12-17.

Gandhidasan, P.; Aug 1983, "Heat flux reduction by a flowing liquid desiccant film over the roof", J. Sol. Energy Eng. (USA), Vol. 105, No. 3; pp. 336.

Gandhidasan, P.; Nov 1990, "Reconcentration of aqueous solutions in a packed bed", Journal of Solar Energy Engineering (USA), Vol. 112, No. 4; pp. 268-272.

Gandhidasan, P.; 1983, "A simple analysis of an open regeneration system", Sol. Energy (United Kingdom), Vol. 31, No. 3; pp. 343-345.

Gandhidasan, P.; 1984, "Solar dehumidified air for low temperature drying systems," Proceedings of the Fourth International Drying Symposium, Jul 9-12 1984. Japan, Tokyo, Jpn: Soc of Chemical Engineers, pp. 748-752.

Gandhidasan, P.; Oct-Dec 1984, "Study of Roof Pond Liquid Desiccant System", International Journal of Energy Research, Vol. 8, No. 4; pp. 387-392.

Gandhidasan, P.; 1985, "Temperature regimes of an open solar regenerator," INTERSOL '85 - Solar energy--the diverse solution. Proceedings of the ninth biennial congress of the International Solar Energy Society, Montreal, Canada, 23 Jun 1985. Elmsford, NY: Pergamon Books Inc., pp. 664-668.

Gandhidasan, P.; 1983, "Testing of an open solar regenerator", Proc. Intersoc. Energy Convers. Eng. Conf, Vol. 18th, No. Vol. 4; pp. 1946-51.

Gandhidasan, P.; 1983, "Thermal Performance Predictions and Sensitivity Analysis for a Parallel Flow Solar Regenerator", ASME Journal of Solar Energy Eng., Vol. 105, May 1983, pp. 224.

Gandhidasan, P.; Kettleborough, C. F.; Ullah, M. R.; 1986, "Calculation of Heat and Mass Transfer Coefficients in a Packed Tower Operating with a Desiccant-Air Contact System", Journal of Solar Energy Engineering, Vol. 108, No. 2; pp. 123-128.

Gandhidasan, P.; Robinson, H.; 1981, "Analysis and simulation of forced flow solar collector/regenerator," Passive Cooling, International Passive and Hybrid Cooling Conference, Nov 6-16 1981. Newark, Del, USA: Am Sect of the Int Sol Energy Soc, pp. 301-30.

Gandhidasan, P.; Sriramulu, V.; Gupta, M. C.; Jan 1981, "Heat and mass transfer in a solar regenerator", Chem. Eng. J. (Lausanne) (Switzerland), Vol. 21, No. 1; pp. 59-63.

Gandhidasan, P.; Ullah, M. Rifat; Kettleborough, C. F.; 1987, "Analysis of heat and mass transfer between a desiccant-air system in a packed tower", J. Sol. Energy Eng, Vol. 109, No. 2; pp. 89-93.

Gandhidasan, P.; Ullah, M. R.; Kettleborough, C. F.; May 1987, "Analysis of heat and mass transfer between a desiccant-air system in a packed tower", J. Sol. Energy Eng. (U.S., Vol. 109, No. 2; pp. 89-93.

Gandhidasan, P.; Ullah, M. R.; Kettleborough, C. F.; 1985, "Analysis of heat and mass transfer between a desiccant-air system in a packed tower," American Society of Mechanical Engineers winter annual meeting, Miami, FL, USA, 17 Nov 1985. New York, NY: American Society of Mechanical Engineers, pp. 6.

Garg, H. P.; 1990, "Solar cooling technologies and techniques," Proceedings of the Workshop on Interaction between Physics and Architecture in Environment Conscious Design at the International Centre for Theoretical Physics (ICTP) congress, Trieste (Italy), 11-29 Sep 1989. Rome, Italy ENEA, pp. 213-241.

Gari, H. A.; Aly, S. E.; Fathalah, K. A.; 1990, "Analysis of an integrated absorption/liquid desiccant air conditioning system", Heat Recovery Systems & CHP, Vol. 10, No. 2; pp. 87-98.

Gas Research Inst., Chicago IL (USA); Jan 1989, Gas Research Institute: overview, January 1989, PB-89-205090/XAB GRI-89/0095. Gas Research Inst., Chicago, IL (USA).

General Electric Co Philadelphia Pa Space Div.; Jun 74, Solar Heating and Cooling of Buildings Study Conducted for Department of the Army. Volume II. Technical Report, 74SD4226-VOL-2; CERL-TR-E-65-Vol-2. General Electric Co Philadelphia Pa Space Div.

Gershon Meckler Associates, P. C.; 1 Dec 1988, Data collection and model development of liquid desiccant integrated HVAC System: Phase II, Final report, DOE/SF/15256-T1. Gershon Meckler Associates, P.C., Herndon, VA (USA).

Ghate, S. R.; Chhinnan, M. S.; Jul 1983, "Pecan drying with silica gel", Energy Agric. (Netherlands), Vol. 2, No. 1; pp. 11-20.

Ghezelayagh, H.; Gidaspow, D.; 1982, "Micro-Macropore Model for Sorption of Water on Silica Gel in a Dehumidifier", Chem. Eng. Sci., Vol. 37, No. 8; pp. 1181-1197.

Gidaspow, D.; Lavan, Z.; Onischak, M.; Perkari, S.; 1978, "Development of a solar desiccant dehumidifier," Proc. - Intersoc. Energy Convers. Eng. Conf, pp. 1623-7.

Gidaspow, Dimitri; Lavan, Zalman; Onischak, Michael; 27 Jul 1982, Thermally regenerative desiccant element, U. S. Patent #4,341,539.

Gidaspow, D.; Lavan, Z.; Onischak, M.; Perkari, S.; Oct 1978, "Development of a solar desiccant dehumidifier," 3rd workshop on the use of solar energy for the cooling of buildings, San Francisco, CA, USA, 15 Feb 1978. pp. 83-89, CONF-780249.

Glav, B. O.; 17 May 1966, Air Conditioning Apparatus, U. S. Patent #3251402.

Glenn, W. E.; Ludeke, C. A.; Filed date 5 Jun 1978 20 May 1980, Solar air conditioning method and apparatus Patent, U. S. Patent #4,203,298.

Gong, Z.; Huang, N.; Coleman, M. J.; 1988, "Conceptual design of solar space cooling for an engineering building at the University of Hawaii," Solar '88: American Solar Energy Society annual meeting and 13th national passive solar conference, Cambridge, MA, USA, 18 Jun 1988. Boulder, CO: American Solar Energy Society, pp. 120-124, CONF-880615.

Gortel, Z. W.; Kreuzer, H. J.; 1983, "Negligible adsorbent cooling in thermal desorption", Surf. Sci, Vol. 131, No. 1; pp. L359-L366.

Grace, W. R. and Co.; 1966, Fluid Processing Handbook - Davison Silica Gel, 1C-15-378. W.R. Grace and Co. Baltimore, Maryland: W.R. Grace and Co.

Gravenstreter, T. E.; 1983, "Augmented air conditioning reduces energy consumption," 6th world energy engineering congress. Advances for energy cost savings for industry and buildings, Atlanta, GA, USA, 29 Nov 1983. Atlanta, GA, USA: Fairmont Press, pp. 91-93.

Greiner, L.; 1977, Chemical heat pump: a simple means to conserve energy. Final report, September 1, 1976-February 28, 1977, SAN-1332-1. Chemical Energy Specialists, Costa Mesa, CA (USA).

Griffiths, W. C.; 1986, "Desiccant-based environmental control systems," 9th world energy engineering congress. Strategies for energy efficient plants and intelligent buildings, Atlanta, GA, USA, 21 Oct 1986. Atlanta, GA: Association of Energy Engineers, pp. 65-68.

Griffiths, W. C.; 1979, Solar Energy Assisted Air-Conditioning Apparatus and Method, U. S. Patent #4 164 125.

Griffiths, W.; Novosel, D.; 1989, Integrated Commercial Rooftop Cooling System, GRI Contract No. 5086-293-1339. Chicago, IL: Gas Research Institute.

Griffiths, William C.; 1989, "Desiccant dehumidification reduces refrigeration loads", Energy Engineering: Journal of the Association of Energy Engineers, Vol. 86, No. 4; pp. 39-47.

Grodzka, P. G.; Rico, S. S.; McCormick, P.; Nov. 1981, Performance and Operational Analysis of a Liquid Desiccant Open-Flow Solar Collector, LMSC-HREC TR D784488. Huntsville, AL: Lockheed Missiles and Space Company, Inc., Huntsville Engineering and Research Center.

Grolmes, Michael A.; Epstein, Michael; 1985, "Property and Composition Effects on the Cyclic Performance of Fixed Bed Desiccant Air Dehumidification," 1985 ASME/AIChE National Heat Transfer Conference (Paper 85-HT-69), Denver, CO, Aug 4-7 1985. New York, NY, USA: American Society of Mechanical Engineers, pp. 1-12.

Grosmaire, Monique; May 1988, "Problems in characterizing silica gels", Materials Research Bulletin, Vol. 23, No. 5; pp. 679-683.

Grossman, G.; 1978, "Open absorption system utilizing solar energy for air conditioning," Conference on heat and mass transfer in buildings. Energy conservation in heating, cooling, and ventilating buildings: heat and mass transfer techniques and alternatives, Dubrovnik, Yugoslavia, 29 Aug 1977. Wasington, DC: Hemisphere Publishing Corp., pp. 641-647.

Grossman, G.; Aug 1979, Solar air conditioning with solar regenerated desiccants. Final report, PB-83-201988. Technion-Israel Inst. of Tech., Haifa. Energy Engineering Center.

Grossman, G.; Johannsen, A.; 1981, "Solar cooling and air conditioning", Prog. Energy Combust. Sci. (United Kingdom), Vol. 7, No. 3; pp. 185-228.

Guillemiont, J. J.; Meunior, F.; Mischler, B.; 1980, "Study of Intermittant Solid Adsorption Cycles for Solar Refrigeration", Rev. Physi Ap, Vol. 15, No. 3; pp. 441.

Gunderson, M. E.; Mar 1979, "Development of solar desiccant dehumidifier," Proceedings of 3rd annual solar heating and cooling Research and Development Branch contractors' meeting, Washington, DC, USA, 24 Sep 1978. pp. 261-267, CONF-780983.

Gunderson, M. E.; 12 Jun 1979, Development of a solar desiccant dehumidifier. Third technical progress report, SAN-1591-3. AiResearch Mfg. Co., Los Angeles, CA (USA).

Gunderson, M. E.; Hwang, K. C.; Railing, S. M.; 31 Mar 1978, Development of a solar desiccant dehumidifier. Volume 1. Summary. Volume 2. Detailed technical information. Technical progress report, SAN-1591-1. AiResearch Mfg. Co., Los Angeles, CA (USA).

Gunderson, M. E.; Hwang, K. C.; Railing, S. M.; Rousseau, J.; 10 Nov 1978, Development of a solar desiccant dehumidifier. Second technical progress report, DOE/CS/31591-2. AiResearch Mfg. Co., Torrance, CA (USA).

Gutdowski, K. M.; Ryduchowski, K. W.; Jan 1986, "Solar absorption system for air conditioning", Int Journal of Refrigeration, Vol. 9, No. 1; pp. 39-42.

Gutkowski, K. M.; Ryduchowski, K. W.; Dec 1983, "Solar absorption system for air conditioning," 6th Miami international conference on alternative energy sources. Alternative Energy Sources (United States), Miami Beach, FL, USA, 12 Dec 1983. pp. 247-249.

Haas, S. A.; Jun 1982, "Solar desiccant cooling: an evolving technology," 9th energy technology conference. Energy Technol. (Wash., D.C.) (USA), Washington, DC, USA, 16 Feb 1982. pp. 1176-1183.

Haas, S. A.; Hall, K. D.; Sum 1982, "Desiccant cooling: a possible winner for the gas industry", Energy (Stamford, Conn.) (USA), Vol. 7, No. 4; pp. 22.

Haffi, Ali; 1987, Analysis of combined heat and mass transfer in closed-cycle adsorption cooling systems, PhD Thesis, Chicago, IL: Illinois Institute of Technology.

Hagen, K. G.; Levine, A.; Colarusso, J. M.; Zakak, A. I.; Dec 1981, The development of solar-assisted gas-fired appliances: Phase II. Final Report Dec 80-Nov 81, PB-82-231663. Thermo Electron Corp., Waltham, MA (USA).

Hajji, A.; Worek, W. M.; Lavan, Z.; 1989, "Numerical simulation of a regenerative closed-cycle adsorption cooling/heating system," 11th Annual American Society of Mechanical Engineers solar energy conference. Solar engineering - 1989, San Diego, CA (USA), 2-5 Apr 1989. New York, NY: American Society of Mechanical Engineers, pp. 339-346, 544.

Hajji, A.; Worek, W. M.; 1991, "Thermodynamics of constant-pressure and constant-volume sorption processes in closed-cycle solid desiccant systems", Chem. Eng. Commun, Vol. 104, pp. 21-40.

Halacy, D.; 1986, Understanding Passive Cooling Systems Technical paper, VITA/TP-48:6/86; ISBN-0-86619-265-4. Volunteers in Technical Assistance, Inc., Arlington, VA.

Hall, K. D. Jr.; Haas, S. A.; 1982, "Competitive economic assessment of residential solar/desiccant cooling," American section of the International Solar Energy Society conference. Proc. Annu. Meet. - Am. Sect. Int. Sol. Energy Soc. (USA), Houston, TX, USA, 1 Jun 1982. pp. 1027-1032.

Harriman, L. G. III; 1990, The Dehumidification Handbook, 2nd Edition, Amesbury, MA: Munters Cargocaire.

Harriman, Lewis G. III; 1985, "Prevention of metallic corrosion in storage areas," Moisture and Humidity 1985: Measurement and Control in Science and Industry, Proceedings of the 1985 International Symposium, Apr 15-18 1985. Research Triangle Park, NC, USA: ISA, pp. 949-964.

Harter, Russell W.; 1965, "Developments in adsorption technology and how they affect the design of drying and dehumidification equipment," Humidity Moisture; Meas. Control Sci. Ind., Pap. Int. Symp. Vol. 2, pp. 384-91.

Hartman, D.; Kosar, D.; Jun 1983, "Innovative gas energy systems for use with passive solar residences," 10th energy technology conference. Energy Technol. (Wash., D.C.) (United States), Washington, DC, USA, 28 Feb 1983. pp. 1247-1259.

Haves, F.; Loxsom, F.; Doderer, E. S.; 1982, "Dehumidification and passive cooling for retrofit and conventional construction," 7th national passive solar conference. Progress in passive solar energy systems, Knoxville, TN, USA, 30 Aug 1982. New York, NY: American Solar Energy Society, pp.911-916.

Haves, P.; 9 Feb 1982, Solar-regenerated desiccant dehumidification. Final report, TENRAC/EDF-064. Trinity Univ., San Antonio, TX (USA).

Haves, P.; Yannas, S.; Bowen, A.; 1983, "Selection and sizing of low energy cooling system for more humid climates," International conference on passive and low energy architecture, Chania, Crete, Greece, 27 Jun 1983. Oxford, England: Pergamon Press, pp. 391-397.

Haves, Phil; 1981, "Simulated performance of a passively cooled residence with a solar regenerated desiccant dehumidifier," Passive Cooling, International Passive and Hybrid Cooling Conference, Nov 6-16 1981. Newark, Del, USA: Am Sect of the Int Sol Energy Soc, pp. 320-32.

Hines, A. L.; et.al.; 1990, Investigation of Co-Sorption of Gases and Vapors as a Means to Enhance Indoor Air Quality, GRI-90-0194. Chicago, IL: Gas Research Institute.

Hodge, J. P.; May 1986, "Innovative ways to save energy in new buildings", Heat., Piping Air Cond. (USA), Vol. 58, No. 5; pp. 71-82.

Hollands, K. G. T; Apr-Jun 1963, "Regeneration of lithium chloride brine in a solar still for use in solar air conditioning", Sol. Energy (USA), Vol. 7, No. 2; pp. 39-43.

Holmberg, R. B.; 1979, "Combined Heat and Mass Transfer in Regenerators with Hygroscopic Materials", J. Heat Transfer, Vol. 101, May 1979, pp. 205-210.

Hooker, D. W.; Shelpuk, B. C.; March 1979, Overview of Desiccant Cooling Systems and Their Storage Requirements, SERI/TP-34-202. Solar Energy Research Institute Golden, CO.

Hooker, D. W.; Arnold, F. H.; 1980, "National Solar Desiccant Cooling Program," Proceedings of the Annual DOE Active Solar Heating and Cooling Contractors' Review Meeting, Lake Tahoe, NV, USA, 26 Mar 1980. pp. 3.1-3.4, SERI/TP-631-618, CONF-800340.

Hougen, O. A.; Marshall, W. R. Jr.; 1947, "Adsorption from a Fluid Stream Flowing Through a Stationary Granular Bed", Chemical Engineering Progress, Vol. 43, No. 4; pp. 197-208.

Howe, R. R.; 1983, Model and performance characteristics of a commercially-sized hybrid air conditioning system which utilizes a rotary desiccant dehumidifier, MS Thesis, Madison, WI: Univ. of Wisconsin.

Howe, R. R.; Beckman, W. A.; Mitchell, J. W.; Jun 1983, "Commercial applications for solar hybrid desiccant systems," VDI Society of German Engineers conference on precipitation. Progress in solar energy Volume 6. Engineering Division, Lindau, F.R. Germany, 7 Jun 1983. pp. 253-258, CONF-830662-Pt.4.

Howe, R. R.; Beckmann, W. A.; Mitchell, J. W.; Aug 1983, "Factors influencing the performance of commercial hybrid desiccant air conditioning systems," 18th intersociety energy conversion engineering conference. Proc., Intersoc. Energy Convers. Eng. Conf. (United States), Orlando, FL, USA, 21 Aug 1983. pp. 1940-1945.

Howell, J. R.; 1987, "Active hybrid solar cooling systems," Solar energy utilization, Izmir, Turkey, 23 Jun 1986. Hingham, MA: Martinus Nujhoff Publishing, pp. 388-408.

Howell, J. R.; 1 Aug 1982, Demonstration of desiccant dehumidification components compatible with solar-powered residential cooling systems. Final report, TENRAC/EDF-077. Texas Univ., Austin (USA).

Howell, J. R.; Hunn, B. D.; Peterson, J. L.; 1986, "Evaluation and Validation of Desiccant Cooling/Dehumidification Systems Models," Proceedings of the Desiccant Cooling and Dehumidification Opportunity for Buildings Workshop, Chattanoga, TN, June 10-11, 1986.

Howell, J. R.; 1987, "Design of liquid desiccant dehumidification and cooling systems," Solar energy utilization, Izmir, Turkey, 23 Jun 1986. Hingham, MA: Martinus Nujhoff Publishing, pp. 374-387.

Howell, J. R.; 1987, Progress in solar engineering, New York, NY: Hemisphere Publishing. pp. 171-182.

Howell, J. R.; Peterson, J. L.; 1991, Hybrid Vapor-Compression/Liquid Desiccant Air Conditioner, U. S. Patent #4 984 434.

Howell, J. R.; Peterson, J. L.; 1987, "Preliminary performance evaluation of a hybrid vapor-compression/liquid desiccant air conditioning system," American Society of Mechanical Engineers winter meeting, Anaheim, CA, USA, 7 Dec 1986. New York, NY: American Society of Mechanical Engineers, pp. 8.

Huang, Bin-Juing; Liao, In-Fan; Mar 1989, "Prototype test of a desiccant cooling system", Zhongguo Gongchen Xuekan/Journal of the Chinese Institute of Engineers, Transactions of the Chinese Institute of Engineers, Series A, Vol. 12, No. 2; pp. 187-195.

Hubard, S. S.; 1954, "Equilibrium Data for Silica Gel and Water Vapor", Ind. Engng Chem., Vol. 46, pp. 356-358.

Humphries, C. L.; Filed date 23 Oct 1963 29 Nov 1966, Hydrocarbon adsorption system Patent, U. S. Patent #3,288,705.

Huskey, B.; Sharp, J.; Venero, A.; Yen, H.; Feb 82, Advanced Solar/Gas Desiccant Cooling System Final Report, GRI-81/0064. Exxon Corp., Florham Park, NJ. Energy Venture Development Group.

Ingram J.B.; Vliet, G. C.; 1982, "Solid Desiccant Rotary Dryer Performance Charts", Progress Solar Energy, Vol. 5, pp. 603-608.

Ismail, M. Zainal; Angus, D. E.; Thorpe, G. R.; 1991, "Performance of a solar-regenerated open-cycle desiccant bed grain cooling system", Solar Energy, Vol. 46, No. 2; pp. 63-70.

Jain, Dilip; Das, S. K.; 1989, "Solar energy assisted desiccant cooling system for preservation of fruits and vegetables", Modelling, Simulation & Control B: Mechanical & Thermal Engineering, Materials & Resources, Chemistry, Vol. 24, No. 2; pp. 1-8.

Jank, R.; Januschkowetz, G.; Mierke, T.; Voigt, B.; 1987, "Development of a zeolite/water-adsorption heat pump for the simultaneous supply of heating and cooling power," Proceedings of the 22nd intersociety energy conversion engineering conference, Philadelphia, PA, USA, 10 Aug 1987. New York, NY: American Institute Aeronaut and Astronaut, pp. 1324-1327.

Jebens, R. W.; Filed date 1 Jun 1979 30 Dec 1980, Solar powered dehumidifier apparatus Patent, U. S. Patent #4,242,112.

Jian, W.; Ziaole, L.; Playne, M. J.; 1985, "The prediction of refrigeration characteristics of molecular sieve adsorption refrigeration system," Technological developments in the effective use of energy, vol. 2, Melbourne, Australia, 27 Aug 1985. Wahroonga, AU: Australian Institute of Energy, pp. 555-564.

JMT (DOE contractor); Jan-Feb 1987, "Desiccant dehumidification can contribute to cogen efficiency", Cogeneration (USA), Vol. 4, No. 1; pp. 26-27.

Jody, B. J.; Daniels, E. J.; Karvelas, D. K.; Dudek, F. J.; 10 May 1991, "Integration of a dessicant cooling system with a stag turbine and an absorption refrigeration cycle to meet the total annual energy requirements of small- and medium-size communities," 82. annual International District Heating and Cooling Association (IDHCA) conference, San Francisco, CA (USA), 22-26 Jun 1991. ANL/CP-73243 CONF-9106215--2 DE91014468. pp. (16 p).

Johannsen, A.; 1979, "Design and operation of a liquid-desiccant type solar air conditioning system," SUN II International Solar Energy Society meeting, Atlanta, GA, USA, 28 May 1979. Elmsford, NY: Pergamon Press Inc., pp. 681-685.

Johannsen, A.; 1980, Developments in solar-powered air conditioning: state-of-the-art and prospects for South Africa. Paper No. 10, PB-81-246076. Council for Scientific and Industrial Research, Pretoria (South Africa). National Mechanical Engineering Research Inst.

Johannsen, A. F.; 1987, "Developments in solar-powered desiccant-type air-conditioning," Conference on renewable energy potential in South Africa, Rondebosch, South Africa, 8 Sep 1986. Albuquerque, NM: Institute for Space Nuclear Power Studies, Univ. of New Mexico, pp. 10.1-10.13.

Johannsen, A.; Apr 1984, "Performance simulation of a solar air-conditioning system with liquid desiccant", International Journal of Ambient Energy, Vol. 5, No. 2; pp. 59-88.

Johannsen, A. F. B; 1983, Simulation of performance of a liquid-desiccant type solar air conditioning system under different climatic conditions in the Republic of South Africa, MS Thesis, Pretoria, South Africa: University of Pretoria.

Johannsen, A.; Grossman, G.; Feb 1983, "Performance simulation of regenerating type solar collectors", Sol. Energy (United Kingdom), Vol. 30, No. 2; pp. 87-92.

Johnston, R. C. R.; 1967, "Regenerative Evaporative Air Conditioning with Dehumidification", Aust. Refrigeration, Air Conditioning and Heating, Vol. 21, No. 2; pp. 29-34 and 65.

Joudi, K. A.; Madhi, S. M.; 1987, "Experimental investigation into a solar assisted desiccant-evaporative air-conditioning system", Sol. Energy (United Kingdom), Vol. 39, No. 2; pp. 97-107.

Jung, D.; Khelifa, N.; Lavemann, E.; Sizmann, R.; 1985, "Energy storage in zeolites and application to heating and air conditioning," Zeolites: Synthesis, Structure, Technology and Applications, Proceedings of an International Symposium. Studies in Surface Science and Catalysis 24., Sep 3-8 1984. Amsterdam, Neth and New York, NY, USA: Elsevier, pp. 555-562.

Jung, D.; Khelifa, N.; Lavemann, E.; Sizmann, R.; 1985, "Solar air conditioning with solid adsorbents in open systems," INTERSOL '85-Solar energy--the diverse solution. Proceedings of the ninth biennial congress of the International Solar Energy Society, Montreal, Canada, 23 Jun 1985. Elmsford, NY: Pergamon Books Inc., pp. 659-663.

Jurinak, J. J.; Mitchell, J. W.; 1984, "Effect of matrix properties on the performance of a counterflow rotary dehumidifier", J. Heat Transfer, Vol. 106, No. 3; pp. 638-645.

Jurinak, J. J.; Banks, P. J.; 1982, "Numerical evaluation of two analogy solutions for a rotary silica gel dehumidifier," ASME Winter Annual Meeting, Phoenix, AZ, USA, 14 Nov 1982. pp. 12, CONF-821101-24.

Jurinak, J. J.; Beckman, W. A.; 1985, Comparison of the performance of open cycle air conditioners utilizing rotary desiccant dehumidifiers, DOE/SF/10548-T2. Wisconsin Univ., Madison (USA). Solar Energy Lab.

Jurinak, J. J.; Beckman, W. A.; Mitchell, J. W.; Aug 1984, "Open-cycle desiccant air conditioning as an alternative to vapor compression cooling in residential applications", J. Sol. Energy Eng. (United States), Vol. 106, No. 3; pp. 252-260.

Jurinak, J. J.; Mitchell, J. W.; May 1984, "Recirculation of purged flow in an Adiabatic counterflow rotary dehumidifier", J. Heat Transfer (United States), Vol. 106, No. 2; pp. 369-375.

Jurinak, Jeff Jerome; 1982, Open cycle solid desiccant cooling -- component models and system simulations, PhD Thesis, Madison, WI: Univ. of Wisconsin.

Jury, S. H.; Edwards, H. R.; 1971, "The Silica Gel-Water Vapor Sorption Therm", Can. J. Chem. Engng., Vol. 49, pp. 663-666.

Kakabaev, A.; Golaev, M.; 1971, "Glazed Flat Surface as a Solution Regenerator for Use in an Absorption Cooling System", Geliotekhnika, Vol. 7, No. 4; pp. 44-49.

Kakabaev, A.; Khandurdyev, A.; Klyshchaeva, O.; Kurbanov, N.; Jan 1976, "Large-scale solar air-conditioning pilot plant and its test results", Int. Chem. Eng. (USA), Vol. 16, No. 1; pp. 60-64.

Kang, T. S.; 1985, Adiabatic Desiccant Open Cooling Cycles, MS Thesis, School of Mechanical and Industrial Engineering, The University of New South Wales, Kinsington, Australia.

Kang, T. S.; 1990, Layered Desiccant Dehumidifiers for Air Conditioning, Ph.D. Dissertation, The University of New South Wales, Kinsington, Australia.

Kang, T. S.; Maclaine-Cross, I. L.; 1989, "High-performance, solid-desiccant, open cooling cycles", J. Sol. Energy Eng, Vol. 111, No. 2; pp. 176-83.

Kathabar Systems Division; 1990, Bulletin KM 90, Brunswick, NJ: Somerset Technologies, Inc.

Kaudinya, J. V.; Kaushik, S. C.; 1986, "Experimental validation of theoretical studies on open and forced flow solar regenerator", Int. J. Sol. Energy (United Kingdom), Vol. 4, No. 1; pp. 13-23.

Kavasogullari, S.; Gandhidasan, P.; Ertas, A.; Anderson, E. E.; 1991, "Performance of CaCl//2 and LiCl liquid desiccants in a dehumidifying packed tower," Proceedings of the 14th Annual Energy-Sources Technology Conference and Exhibition. Emerging Energy Technology - 1991 American Society of Mechanical Engineers, Petroleum Division (Publication) PD v 36. Publ by ASME, New York, NY, USA. p 45-49, Houston, TX, USA, 1991 Jan 20-23.

Kester, F. L.; Lunde, P. J.; 1973, "Chemisorption-B.E.T. Model for Adsorption of Water Vapor on Silica Gel", AIChE Symp. Ser., Vol. 69, No. 134; pp. 87-94.

Ketteringham, John M.; Beutner, Heinz P.; Oct 68, Water Vapor Removal System Final rept. 15 Nov 65 - 15 Mar 68, AMRL-TR-68-42. Little (Arthur D) Inc Cambridge Mass.

Kettleborough, C. F.; Aug 1980, Desiccant dehumidification and cooling with an indirect evaporative cooler. Final Report, 1 Apr 1980, TENRAC/EDF-030. Texas A & M Univ., College Station (USA).

Kettleborough, C. F.; 1980, "Solar assisted desiccant dehumidification and cooling with and indirectevaporative cooler", American Society of Mechanical Engineers (Paper for Meet Nov 16-21 1980), Vol. 80 WA/Sol-29, pp. 1-11.

Khalil, K. H.; Sakr, I. A.; Hegazi, A. I.; Kettani, M. A.; Soussou, J. E. (eds.); 1976, "Factors affecting the use of solar energy for cooling," International conference on heliotechnique and development. Volume II, Dhahran, Saudi Arabia, 2 Nov 1975. Cambridge, MA: Development Analysis Associates, Inc., pp. 125-132, CONF-7511131--P2.

Khelifa, N.; 3 May 85, Absorption System 'Silica Gel/Water Vapor'. Applications in Solar Air Conditioning Systems Diss. (Dr.rer.nat), ETDE-MF-0711180. Munich Univ. (Germany, F.R.). Fakultaet fuer Physik.

Khelifa, N.; Jung, D.; Lavemann, E.; Sizmann, R.; 1983, "Energy storage in silica-water systems," Solar world congress. Vol. 3, Perth, Australia, 15 Aug 1983. Oxford, England: Pergamon Press, pp. 1488-1492.

Khelifa, N.; Lavemann, E.; Hallermayer, R.; Sizmann, R.; 1984, "Solar air conditioning with silica gel-water-air," Proceedings of the 5th international solar forum. Vol. 1, Berlin, F.R. Germany, 11 Sep 1984. Muenchen, Germany, F.R.: DGS-Sonnenenergie Verl., pp. 370-374.

Kim, S.; Feb 1983, Development of a laminar flow desiccant bed for solar air conditioning application, UCLA-ENG-8312. California Univ., Los Angeles (USA). School of Engineering and Applied Science.

Kim, S.; Biswas, P.; Mills, A. F.; May 1985, "A compact low-pressure drop desiccant bed for solar air conditioning applications: bench scale tests", J. Sol. Energy Eng. (USA), Vol. 107, No. 2; pp. 120-127.

Kinast, J. A.; Rush, W. F.; Wurm, J.; Macriss, R. A.; Aug 1979, SOLAR-MEC development program. Project 61019 quarterly progress report, September 1-December 31, 1978, DOE/CS/34495-T2 COO-4495-19. Institute of Gas Technology, Chicago, IL (USA).

Kinast, J. A.; Wurm, J.; Zawacki, T. S.; Macriss, R. A.; Mar 1985, Solar-MEC Development Program. Project 61019 Final Report, September 1, 1977-March 9, 1982, DOE/CS/34495-53 COO-4495-53. Institute of Gas Technology, Chicago, IL (USA).

Kini, Anil; Waugaman, Dennis G.; Kettleborough, C. Fred; 1990, "Progress in desiccant cooling," Winter Annual Meeting of the American Society of Mechanical Engineers. Solar Energy in the 1990s American Society of Mechanical Engineers, Solar Energy Division (Publication) SED v 10. Publ by ASME, New York, NY, USA. p 9-17, Dallas, TX, USA, 1990 Nov 25-30.

Klein, H.; 1988, Heat and Mass Transfer in Regenerative Enthalpy Exchangers, MS Thesis, Madison, WI: Univ. of Wisconsin-Madison.

Kleiser, James Dickson; 1987, Modelling internal combustion engine-powered desiccant cooling systems, MS Thesis, Reno, Nevada: University of Nevada.

Klotz, Stephen P.; Street, Robert L.; 1981, "On the simulation of the coupled laminar boundary layers at a smooth, phase-changing gas-liquid interface," Numerical Methods in Laminar and Turbulent Flow, Proceedings of the 2nd Intl. Conference, Jul 13-16 1981. Swansea, Wales: Pineridge Press, pp. 517-530.

Kluppel, R. P.; Gurgel, J. M. A.M.; 1988, "Solar adsorption cooling using silica gel/water," Advances in solar energy technology. V. 3. Proceedings of the biennial congress of the International Solar Energy Society, Hamburg, F.R. Germany, 13-18 Sept 1987. Oxford, GB: Pergamon Press, pp. 2627-2631.

Kluppel, Rogerio P.; Gurgel, Jose Mauricio A. M.; 1988, "Solar cooled drinking fountain", Sunworld, Vol. 12, No. 4; pp. 113-114.

Klyshchaeva, O.; Kakabaev, A.; Iomudov, A.; Pelageikina, S. K.; 1980, "Preliminary tests of solar unit for reduction of heat content and evaporative cooling of air", Appl. Solar Energy (Engl. Transl.) (USA), Vol. 16, No. 3; pp. 37-40.

Ko, S. M.; 3 Jun 1980, LiCl dehumidifier/LiBr absorption chiller hybrid air conditioning system with energy recovery, U. S. Patent #4,205,529.

Ko, S.M.;Merrifield, D.V.; 1977, "Energy-efficient desiccant drying/dehumidification using solar or fossil fuel energy," Proceedings of the 12th intersociety energy conversion engineering conference. Vol. I, Washington, DC, USA, 28 Aug 1977. La Grange Park, IL: American Nuclear Society, Inc., pp. 434-441.

Ko, Y. J.; 1989, Advanced Desiccant Cooling System with Staged Regeneration includingSolid-Side Resistances, Ph.D. Dissertation. Illinois Institute of Technology.

Ko, Y. J.; Charoensupaya, D.; Lavan, Z.; 1990, "Open-cycle desiccant cooling system with staged regeneration Heat," Proceedings of the Ninth International Heat Transfer Conference, Jerusalem (Israel), Aug 19-24, 1990. New York, NY (USA): Hemisphere Publishing, pp. 121-126.

Koh, H. K.; 1977, Study on the use of solar energy for the regeneration of silica gel used for grain drying, PhD Thesis, Manhattan, KS: Kansas State Univ.

Kohler, J.; Jul 1982, "Fresh look at solar cooling", Sol. Age (USA), Vol. 7, No. 7; pp. 34-41.

Komarneni, S.; Malla, P. B.; Roy, R.; Jun 91, High Performance Nanocomposite Desiccation Materials. Annual Report, March 1990-February 1991, 1551459 PB91-213918/XAB GRI-91/0126. Pennsylvania State Univ., University Park. Materials Research Lab. 009222082. 35p.

Komarneni, S.; Roy, R.; Jun 89, Nano-Composite Desiccation Materials. Annual Report March 1988-February 1989, GRI-89/0083. Pennsylvania State Univ., University Park. Materials Research Lab.

Komarneni, S.; Roy, R.; Mar 1988, Nano-composite desiccation materials. Annual report, March 1987-February 1988, PB-88-230024/XAB. Pennsylvania State Univ., University Park (USA). Materials Research Lab.

Komarneni, S.; Roy, R.; Jun 90, Nano-Composite Desiccation Materials. Final Report, March 1987-February 1990, 1473044 PB90-247388/XAB GRI-90/0092. Pennsylvania State Univ., University Park. Materials Research Lab. 009222082. 76p.

Koopman, N.; Kosar, D.; 1989, Integrated Electric Air Conditioning/Gas Desiccant Dehumidification Cooling Systems, GRI Contract No. 5086-292-1346. Chicago, IL: Gas Research Institute.

Koopman, R. N.; Marciniak, T. J.; Oct 1989, Gas-fired desiccant dehumidification system field evaluation in a quick-service restaurant. Final report, October 1989, PB-90-115155/XAB MCD/ENG/RD-88-01. McDonald's Corp., Oak Brook, IL (USA).

Kosar, D. R.; Cohen, B. M.; Anderson, W. M.; 1985, "Supermarket dehumidification with gas-fired desiccant systems - field evaluation results," International Gas Research Conference, Washington, DC, USA, 10 Sep 1984. Rockville, MD: Government Institutes, Inc., pp. 971-985.

Kosar, D.; Novosel, D.; May 1988, Outline of desiccant cooling program, PB-88-213889/XAB GRI-88/0136. Gas Research Inst., Chicago, IL (USA).

Kotob, S.; Salman, M.; Ayyash, S.; Farhat, M.; 1983, "Low cost microprocessor based optimal controller for solar cooling systems," Proceedings of the 22nd IEEE Conference on Decision and Control Including The Symposium on Adaptive Processes, Dec 14-16 1983. New York, NY, USA: IEEE, pp. 958-963.

Kravchik, T.; Korin, E.; Borde, I.; 1990, "Influence of material properties and heat removal on mass and heat transfer in a solid desiccant dehumidifier", Chem. Eng. Process, Vol. 27, No. 1; pp. 19-25.

Kreider, J. F.; Hoogendoorn, C. J.; Kreith, F.; 1989, Solar Design: Components, Systems, Economics, New York, NY: Hemisphere Publishing Corporation. pp. 254-258.

Kreider, J. F.; Kreith, F.; 1982, Solar Heating and Cooling: Active and Passive Design, Second, New York, NY: McGraw-Hill Book Company. pp. 260-261.

Krishna, S. Murali; Murthy, S. Srinivasa; 1989, "Experiments on a silica gel rotary dehumidifier", Heat Recovery Syst. CHP, Vol. 9, No. 5; pp. 467-73.

Kumar, Pradeep; Devotta, S.; 1989, "Modeling of the thermal behavior of a solar regenerator for open-cycle cooling systems", Appl. Energy, Vol. 33, No. 4; pp. 287-95.

Kumar, Y.; Kaushik, S. C.; 1990, "Performance testing of a rotary bed solid desiccant dehumidifier", International Journal of Ambient Energy, Vol. 11, Oct 4, 1990, No. 4; pp. 211-218.

Kumar, Y.; Kaushik, S. C.; 1990, "Performance and cost evaluation of solid desiccant solar cooling system", International Journal of Ambient Energy, Vol. 11, July 3, 1990, No. 3; pp. 149-156.

Kume, Y.; Sago, Y.; Sugihara, S.; Cramer, T. L.; 1986, "Development of advanced gas fired dehumidifier," Proceedings of the 1986 international gas research conference, Toronto, Canada, 8 Sep 1986. Rockville, MD: Government Institutes Inc., pp. 779-788.

Kuo, S. L.; 1987, Adsorption of chlorinated hydrocarbons on silica gel, PhD Thesis, Stillwater, OK (US): Oklahoma State Univ.

Kutscher, C. F.; May 1981, "Solar Desiccant Laboratory experiments," Active contractors' review meeting, Washington, DC, USA, Sep 1981. pp. 3, SERI/TP-632-1253 CONF-810912-5.

Kutscher, C. F.; Barlow, R. S.; Aug 1982, Dynamic performance of packed-bed dehumidifiers: experimental results from the SERI desiccant test loop, SERI/TR-253-1429. Solar Energy Research Inst., Golden, CO (USA).

Kutscher, Charles F.; 1982, "SERI desiccant laboratory experiments," Annual DOE Active Solar Heating and Cooling Contractors' Review Meeting: Proceedings and Project Summaries, Washington, DC, USA: DOE, pp. 3. 23-3. 25, CONF-810912.

Kweller, E.; Mei, V. C.; Chen, F. C.; 1991, "Options of desiccant cooling and dehumidification technology", Proc. Intersoc. Energy Convers. Eng. Conf, Vol. 26th, No. 2; pp. 566-70.

LaCasse, Gary A.; Bechtol, Donald; Aug 1989, "Using desiccant dehumidification during surface preparation and coating operations", Materials Performance, Vol. 28, No. 8; pp. 32-36.

Langhorst, Marsha L.; 16 Sep 1986, Method and device for separating water vapor from air, U. S. Patent #4,612,019.

Larriva, G. A.; 1941, Air Conditioning System and Apparatus Therefor,, U. S. Patent #2 266 219.

Lavan, Z.; Aug 1982, "Second law analysis of desiccant cooling systems", J. Sol. Energy Eng. (USA), Vol. 104, No. 3; pp. 229-236.

Lavan, Z.; Gidaspow, D.; 1979, "Development of a Solar Desiccant Dehumidifier," Proceedings of the 3rd Annual Soar Heating and Cooling R & D Branch Contractor Meeting, Sept 1978. Washington, D.C.: USA. Dept. of Energy,

Lavan, Z.; Gidaspow, D.; Onischak, M.; Chaturvedi, S.; Mathiprakasam, B.; Perkari, S.; 1980, "Development of a solar desiccant dehumidifier," Symposium on solar energy. Solar energy: international program. Volume 2, Cairo, Egypt, 16 Jun 1978. Elmsford, NY: Pergamon Press, pp. 898-931.

Lavan, Z.; Monnier, J. B.; Worek, W. M.; 1982, "Second Law Analysis of Desiccant Cooling Systems", Journal of Solar Energy Engineering, Vol. 104, pp. 229-236.

Lavan, Z.; Worek, W. M.; Monnier, J.; 1981, "Cooled bed solar-powered desiccant air conditioning," IECEC Conference. Proc., Intersoc. Energy Convers. Eng. Conf. (USA), Atlanta, GA, USA, 9 Aug 1981. pp. 1654-1661.

Lavan, Z.; Worek, W. M.; 28 Jan 1988, Effect of heat and mass transfer properties on desiccant dehumidifier and cooling system performance, DOE/SF/16528-T2. Illinois Inst. of Tech., Chicago (USA).

Lavan, Z.; Worek, W. M.; 28 Jan 1988, Parametric study and optimization of an open-cycle adiabatic solid desiccant cooling system Theoretical model of an open-cycle desiccant cooling system, DOE/SF/16528-T1. Illinois Inst. of Tech., Chicago (USA); Chicago Univ., IL (USA).

Lavan, Zalman; Gidaspow, Dimitri; 1982, "Testing of a cross-cooled solar powered desiccant cooling system," Annual DOE Active Solar Heating and Cooling Contractors' Review Meeting: Proceedings and Project Summaries, Sep 9-11 1981. Washington, DC, USA: DOE, pp. 3. 1-3. 12, CONF-810912.

Lavemann, E.; Schneewind, R.; Sizmann, R.; 1988, "Low temperature driven open air conditioning with solid adsorbents," Advances in solar energy technology. V. 3. Proceedings of the biennial congress of the International Solar Energy Society, Hamburg, F.R. Germany, 13-18 Sept 1987. Oxford, GB: Pergamon Press, pp. 2622-2626.

LeChevalier, R. R.; Oct 1978, "Overview of the national solar cooling," The 3rd workshop on the use of solar energy for the cooling of buildings, San Francisco, CA, USA, 15 Feb 1978. pp. 3-13, CONF-780249.

Lemmini, F.; Bahraoui, J.; Guilleminot, J. J.; Meunier, F.; Pons, M.; Vezioglu, T. N.; 1988, "Adsorptive solar cooling Simulation of a year operation in Rabbat Marroco," The 8th Miami international conference on alternative energy sources. Volume 1-2 (Condensed Papers), Miami Beach, FL (USA), 14-16 Dec 1987. Coral Gables, FL: Clean Energy Research Inst. University of Miami, pp. 99-100.

Lenz, T. G.; Löf, G. O. G.; Patnaik, S.; Dec 1987, Design and testing a solar cooling system employing liquid desiccants: Dehumidifier experiments in Colorado State University Solar House II: Final report, 1986--1987, DOE/SF/16306-5. Colorado State Univ., Fort Collins (USA).

Lenz, T. G.; Löf, G. O. G.; Patnaik, S.; 1987, "Experimental studies with a solar open-cycle liquid desiccant cooling system," ISES solar world congress 1987: Advances in solar energy technology. Book of abstracts. Vol. 1, Hamburg, F.R. Germany, 13 Sep 1987. pp. 2.8.07, CONF-870903-Vol.1-Absts.

Lenz, T.; Löf, G. O. G.; Flaherty, M.; Misra, S.; Patnaik, S.; May 1989, Testing and design of solar cooling systems employing liquid dessicants, SAN-16306-12 DE91012149. Colorado State Univ., Fort Collins, CO (USA). Solar Energy Applications Lab. 9501143. (84 p).

Leonard, Laverne; May-Jun 1986, "The gentle art of upstram dehumidifying drying", Plastics Compounding, Vol. 9, No. 3; pp. 38 and 46.

Levine, A.; Cohen, B.; Linteris, G.; Kolody, D.; Bryant, R. C.; McGorray, J. J.; 1983, "Evaluation of a desiccant-based dehumidification system for supermarket applications," Mid-Atlantic energy conference. Managing energy for buildings, Baltimore, MD, USA, 7 Dec 1982. Rockville, MD: Government Institutes, Incorporated, pp. 238-255.

Lindler, K. W.; 1989, "A computer aided design approach to the optimization of control strategies for desiccant air conditioning," 11th annual American Society of Mechanical Engineers solar energy conference. Solar engineering - 1989, San Diego, CA (USA), 2-5 Apr 1989. New York, NY: American Society of Mechanical Engineers, pp. 71-76, 544.

Lingemann, H.; 20 Jan 1987, Desiccant application for double-glazed windows, etc. and a spacer section filled with the desiccant application, U. S. Patent #1,216,803.

Lobo, M.; Russell, L. D.; Jun 1987, Development of desiccant dehumidification system utilizing waste heat from air conditioners, TVA/OP/EDT-87/16. Tennessee Valley Authority, Chattanooga (USA). Div. of Energy Demonstrations and Technology; Mississippi State Univ., Mississippi (USA). Thermal and Fluid Dynamics Group.

Lobo, P. C.; da Silva, C. L.; 1982, "Solar regeneration of a desiccant solution," 4th Miami international conference on alternative energy sources, Miami Beach, FL, USA, 14 Dec 1981. Coral Gables, FL: Univ. of Miami, pp. 83.

Lodwig, E.; Wilke, D. A.; Bressman, J.; 1977, "Solar powered desiccant air conditioning system," Solar world meeting Proceedings of the 1977 annual meeting of the American Section of the International Solar Energy Society. Volume 1, Sections 1--13, Orlando, Florida, USA, 6 Jun 1977. Cape Canaveral, FL: American Section of the International Solar Energy Society, pp. 7.1-7.3, CONF-770603--P1.

Löf, G. O. G.; Appleyard, J.; 1988, "Preliminary performance of simplified advanced solar solid desiccant cooling system employing air-to-water exchanger coil and partial air recirculation," 10th annual American Society of Mechanical Engineers solar energy conference. Solar engineering - 1988, Denver, CO, USA, 10 Apr 1988. New York, NY: American Society of Mechanical Engineers, pp. v.

Löf, G. O. G.; Beba, S.; Cler, G.; Birdsong, M.; McLay, B.; Nov 1988, Performance of solar heating and cooling systems: Solid desiccant cooling/fresh air heating with evacuated-tube collectors in CSU Solar House I Final report, June 1986--May 1987 operation, DOE/SF/16306-7. Colorado State Univ., Fort Collins, CO (USA). Solar Energy Applications Lab.

Löf, G. O. G.; Rao, S.; Lenz, T.; Dec 1981, Open-cycle lithium chloride (solar) cooling. Final report, 1 February 1980-31 May 1981, DOE/CS/30206-T1. Colorado State Univ., Fort Collins (USA). Solar Energy Applications Lab.

Löf, George O. G.; Cler, Gerald; Brisbane, Thomas; 1988, "Performance of a solar desiccant cooling system", J. Sol. Energy Eng, Vol. 110, No. 3; pp. 165-71.

Lorsch, H. G.; Jun 1981, "Active solar heating and cooling systems. Part 2", Energy Build. (Switzerland), Vol. 3, No. 2; pp. 137-167.

Lotz, H.; Priority date 9 Aug 1983, Germany, Federal Republic of (F.R. Germany) 23 Oct 1984, Continuously operating an adsorption refrigeration plant, especially for operation by waste heat of combustion engines or the like, U. S. Patent #4,478,057.

Lowenstein, A. I.; Dean, M. H.; 1992, "The Effect of Regenorator Performance on a Liquid Desiccant Air Conditioner", ASHRAE Transactions, Vol. 98, No. 1; pp. 704-711.

Lowenstein, A.; Marsala, J.; Spatz, M.; Feldman, S.; Tandler, J.; Nov 1988, Integrated gas-fired desiccant dehumidification vapor-compression cooling system for residential application. Phase 1. Final report, December 1986-December 1987, PB-89-140842/XAB TR-4442-209-88. TECOGEN, Inc., Waltham, MA.

Lowenstein, A. I.; Gabruk, R. S.; 1992, "The Effect of Absorber Design on the Performance of a Liquid Desiccant Air Conditioner", ASHRAE Transactions, Vol. 98, No. 1; pp. 712-720.

Lumsdaine, E.; Cherng, J. G.; 1981, Evaluation of solar water heating and solar active cooling in New Mexico. Final report,NP-81903394;END-2-65-2214. New Mexico Energy & Minerals Dept.,Santa Fe, NM.

Lunde, P. J.; 1 Apr 1975, Solar powered desiccant air conditioning system. Final report, June 1, 1974-December 31, 1974, CEM-4171-526. Center for the Environment and Man, Inc., Hartford, Conn. (USA).

Lunde, P. J.; Aug 1975, Solar powered desiccant air conditioning system. Phase II. Quarterly progress report, COO-2702-1. Center for the Environment and Man, Inc., Hartford, Conn. (USA).

Lunde, P. J.; Jul 1976, Solar desiccant air conditioning with silica gel, SAN-1122-76/2. Center for the Environment and Man, Inc., Hartford, CT Atlas Corp., Santa Clara, CA (USA).

Lunde, P. J.; 31 Jan 1974, Solar powered desiccant air conditioning system. Annual progress report covering the period June 1, 1974 to December 31, 1974, CEM-4171-521. Center for the Environment and Man, Inc., Hartford, Conn. (USA).

Lunde, P. J.; Kester, F. L.; 1975, "Chemical and Physical Gas Adsorption in Finite Multimolecular Layers", Chem. Engng Sci., Vol. 30, pp. 1497-1505.

Lunde, P.J.; Kester, F.L.; Jun 75, Desiccant Humidity Control System Final Report, 21 Jun 1971 - 21 Jun 1972, NASA-CR-115568;SVHSER-6040. Hamilton Standard Div.,United Aircraft Corp.,Windsor Locks

Lunde, P. J.; 1 Apr 75, Solar Powered Desiccant Air Conditioning System Final rept. 1 Jun-31 Dec 74, CEM-4171-526; NSF/RA/N-75/266. Center for the Environment and Man, Inc., Hartford, Conn.

Macdonald, Nancy J.; 1983, "Utilization of condenser heat for desiccant dehumidifiers in supermarket applications," Technical Papers Presented at the 1983 Annual Meeting of the American Society of Heating, Refrigerating and Air-Conditioning Engineers, Inc. ASHRAE Transactions v 89 pt 2A, Jun 26-29 1983. Atlanta, Ga, USA: ASHRAE, pp. 225-235.

Maclaine-cross, I. L.; Feb 1985, "High-performance Adiabatic Desiccant Open-Cooling cycles", J. Sol. Energy Eng., Vol. 107, No. 1; pp. 102-104.

Maclaine-cross, I. L.; May 1987, "Hybrid Desiccant Cooling in Australia", Australian Refrigeration, Air Conditioning and Heating, Vol. 41, No. 5; pp. 16-25.

Maclaine-cross, I. L.; 1988, "Proposal for a Desiccant Air Conditioning System", ASHRAE Transactions, Vol. 94, No. 2; pp. 1997-2009.

Maclaine-cross, I. L.; 1974, A Theory of Combined Heat and Mass Transfer in Regenerators, PhD Thesis, Australia: Monash University.

Maclaine-cross, I. L.; Banks, P. J.; 1972, "Coupled Heat and Mass Transfer in Regenerators-Prediction using an Analogy with Heat Transfer", Int. J. Heat Mass Transfer, Vol. 15, pp. 1225-1242.

Maclaine-cross, I. L.; Pesaran, A. A.; 1986, "Heat and Mass Transfer Analysis of Dehumifiers Using Adiabatic Transient Tests," AIAA/ASME 4th Joint Thermophysics and Heat Transfer Conference. AIAA Paper, Boston, Mass., Jun 2-4 1986. New York, NY, USA: AIAA, pp. 1-11, AIAA-86-1306.

Macriss, R. A.; Wurm, J.; Mar 1979, "Development of solar-MEC heating/cooling system," Proceedings of 3rd annual solar heating and cooling Research and Development Branch contractors' meeting, Washington, DC, USA, 24 Sep 1978. pp. 296-297, CONF-780983.

Macriss, R. A.; Wurm, J.; 1980, "SOLAR-MEC development," Proceedings of the annual DOE active solar heating and cooling contractors' review meeting, Lake Tahoe, NV, USA, 26 Mar 1980. pp. 3.11-3.13, CONF-800340.

Macriss, R. A.; Zawacki, T. S.; 1982, "High COP rotating wheel solid desiccant system," Ninth energy technology conference, Washington, DC, USA, 16 Feb 1982. Chicago, IL: IGT Document Center, pp. vp.

Mahmoud, Kamel G.; Ball, Herbert D.; 1988, "Liquid desiccant systems for solar cooling applications," Proc. Intersoc. Energy Convers. Eng. Conf, pp. 149-52.

Mahmoud, Kamel G.; Ball, Herbert D.; 1991, "Solar desiccant systems for grain drying", Energy Conversion and Management, Vol. 31, No. 6; pp. 595-598.

Maisotsenko, V. S.; 1987, "Systems for cooling natural gas in regions of hot and dry climate", Applied Solar Energy (English translation of Geliotekhnika), Vol. 23, No. 4; pp. 66-70.

Majumdar, P.; 1986, Analysis of desiccant-cooling systems using advanced-desiccant matrix structure, PhD Thesis, Chicago, IL: Illinois Institute of Technology.

Majumdar, P.; Worek, W. M.; Mar 1989, "Combined heat and mass transfer in a porous adsorbent", Energy (Oxford), Vol. 14, No. 3; pp. 161-175.

Majumdar, P.; Lavan, Z.; Worek, W. M.; 1983, "Performance of desiccant cooling systems," 6th annual ASME technical conference on commercial building heating and cooling applications, Orlando, FL, USA, 19 Apr 1983. New York, NY: ASME, pp. 408-413.

Majumdar, P.; Worek, W. M.; Lavan, Z.; 1985, "Heat and mass transfer in a composite desiccant material," 1985 ASME National Heat Transfer Conference. American Society of Mechanical Engineers (Paper), Aug 4-7 1985. New York, NY, USA: ASME, pp. 1-10.

Majumdar, P.; Worek, W. M.; 1989, "Performance of an open-cycle desiccant cooling system using advanced desiccant matrixes", Heat Recovery Syst. CHP, Vol. 9, No. 4; pp. 299-311.

Majumdar, P.; Worek, W. M.; Lavan, Z.; 1982, "Simulation of a cooled bed solar powered desiccant air-conditioning system," Progress in solar energy: the renewable challenge. American section of the International Solar Energy Society conference, Houston, TX, USA, 1 Jun 1982. Boulder, CO: American Solar Energy Society, pp. 627-632.

Makino, T.; Ohnishi, K.; Yoshida, A.; Horigome, T.; Kimura, K.; Takakura, T.; Nishino, T.; Fujii, I.; 1990, "Scattering-absorbing characteristics of a silica-gel packed bed for solar radiation," Clean and Safe Energy Forever. V. 1 - World congress of the International Solar Energy Society, Kobe (Japan), Sep 4-8, 1989. Oxford (GB) Pergamon Press, pp. 845-849.

Manley, Dianne L.; Bowlen, Kennard L.; Cohen, Barry M.; 1985, "Evaluation of gas-fired desiccant-based space conditioning for supermarkets," ASHRAE Transactions: Technical Papers presented at the 1985 Winter Meeting. ASHRAE Transactions v 91 pt 1B, Jan 27-30 1985. Atlanta, GA, USA: ASHRAE, pp. 447-456.

Marciniak, T. J.; Grolmes, M. A.; Epstein, M.; Mar 1985, Solid-desiccant dehumidification systems for residential applications. Final report, October 1983-March 1985, PB-85-198489/XAB FAI-85/15. Fauske and Associates, Inc., Burr Ridge, IL (USA).

Marciniak, T. J.; Koopman, R. N.; Kosar, D. R.; 1991, "Gas-fired desiccant dehumidification system in a quick-service restaurant," ASHRAE Winter Meeting - Technical Papers. ASHRAE Transactions pt 1., New York, NY, USA, Jan 19-23, 1991. Atlanta, GA (USA): ASHRAE, pp. 657-666.

Marsala, J.; Lowenstein, A. I.; Ryan, W.; 1989, "Liquid Dessicant for Residential Applications", ASHRAE Transactions, Vol. 95, No. 1; pp. 828-834.

Marsala, J.; Zografos, A.; Petroff, C.; 1989, Liquid Desiccant Technology Development. Phase 1. Final Report January 1988-April 1989, TR4438-066-89; GRI-89/0132. Tecogen, Inc., Waltham, MA.

Marsala, J.; Zografos, A.; Bartz, D.; Feldman, S.; Jun 1991, Liquid-desiccant technology development. Phase 2. Final report, October-December 1989, PB-91-222133/XAB TR--4438-031-91. TECOGEN, Inc., Waltham, MA (USA).

Martin, M.; Elmer, D.; 1980, "Passive cooling program overview," 1980 US Department of Energy Passive and Hybrid Solar Energy Program update meeting, Washington, DC, USA, 21 Sep 1980. pp. 3.65-3.68, CONF-800972.

Martin, Marlo; 1981, "Passive cooling of buildings," Symposium Papers - Future Alternatives in Residential and Commercial Space Conditioning, Jun 12-14 1980. Chicago, Ill, USA: Inst of Gas Technol, pp. 1-11.

Mathiprakasam, B.; Jul 1983, "Use of desiccant beds for utility load leveling in summer," Electric Power Research Institute workshop on thermal storage. Opportunities in thermal-storage R and D, Palo Alto, CA, USA, 17 Jan 1983. pp. 34.1-34.9, EPRI-EM-3159-SR CONF-830142- CONF-830122.

Mathiprakasam, B.; Lavan, Z.; Jan 1980, Performance predictions of silica-gel desiccant dehumidifiers, DOE/CS/31589-T10 DES-80-3. Illinois Inst. of Tech., Chicago (USA).

Mathiprakasam, B.; Lavan, Z.; Feb 1980, "Performance predictions for adiabatic desiccant dehumidifiers using linear solutions", Journal of Solar Energy Engineering, Vol. 102, No. 1; pp. 73-79.

Mathiprakasam, Balakrishnan; 1980, Performance predictions of silica gel desiccant cooling systems, PhD Thesis, Chicago, IL: Ilinois Institute of Technology.

Matsuki, K.; Saito, Y.; 1988, "Desiccant Cooling Research and Development in Japan", ASHRAE Transactions, Vol. 94, No. 1; pp. 537-551.

Matsuki, K.; Tatsuoka, M.; Tonomura, T.; 1981, "On a prototype desiccant air-conditioner and its performance data," Solar Cooling and Dehumidifying: Proceedings of the 1st International Conference, SOLAR/80, Caracas, Venezuela, Aug 3-6 1980. Oxford, Eng and New York, NY, USA: Pergamon Press, pp. 159-179.

Matsuki, K.; Tatsuoka, M.; Tonomura, T.; Aug 1983, "A prototype solar desiccant air-conditioner," 18th Intersociety energy conversion engineering conference. Proc., Intersoc. Energy Convers. Eng. Conf. (USA), Orlando, FL, USA, 21 Aug 1983. pp. 1927-1932.

Matsumoto, K.; Kanatani, K.; Hinotani, K.; Yamano, M.; Igarashi, M.; Sakata, T.; Matsumae, T.; Watanabe, K.; Nakajima, Y.; 1985, "A solar desiccant cooling system," Proceedings of the international symposium on thermal applications of solar energy, Fuji-Hakone, Japan, 8 Apr 1985. Tokyo, Japan: Japan Solar Energy Society, pp. 577-582.

Mayer, E.; 1981, "Solar air conditioning with solid absorbents and earth cooling," 2nd Miami international conference on alternative energy sources. Altern. Energy Sources (United States), Miami Beach, FL, USA, 10 Dec 1979. pp. 741-748.

Mayer, E.; 1982, "Solar air conditioning unit using silica gel and cold water," Solar World Forum, Proceedings of the International Solar Energy Society Congress, Aug 23-28 1981. Oxford, Engl and New York, NY, USA: Pergamon Press, pp. 583.

Mayer, Eric R.; 1981, "Passive and low energy comfort dehumidification methods," International Passive and Hybrid Cooling Conference, Nov 6-16 1981. Newark, Del, USA: Am Sect of the Int Sol Energy Soc, pp. 660-66.

McCallum, T. O.; Russell, L. D.; Jun 1983, Device to reduce air-conditioning loads by use of waste heat for dehumidification. Final report, DOE/R4/10486-T1. Mississippi State Univ., Mississippi State (USA).

McCormick, P. O.; Brown, S. R.; Tucker, S. P.; Jun 1983, Performance of a glazed open flow liquid desiccant solar collector for both summer cooling and winter heating: Final report, LMSC-HREC-TR-D-867353. Lockheed Missiles and Space Co., Inc., Huntsville, AL (USA). Research and Engineering Center.

McQueen, T. M.; Arnas, O. A.; Nugent, D. M.; Hamza, M. H.; 1984, "Retrofitted solar assisted air conditioning systems for small commercial buildings-experimental results," International Association of Science and Technology for Development international conference on applied simulation and modeling Energy, power and environmental systems, San Francisco, CA, USA, 4 Jun 1984. Anaheim, CA: Acta Press, pp. 82-85.

McQueen, Troy M.; Arnas, Ozer A.; 1984, "Retrofitted conditioning systems for commercial buildings," Proceedings of the Annual Meeting - American Section of the International Solar Energy Society, Jun 5-7 1984. Boulder, CO, USA: American Solar Energy Soc, pp. 93-97.

Meckler, G.; 8 May 1984, Air conditioning apparatus, U. S. Patent #4446774.

Meckler, G.; 16 Feb 1982, Air conditioning apparatus utilizing solar energy and method, U. S. Patent #4315412.

Meckler, G.; 25 Mar 1986, Air conditioning apparatus, U. S. Patent #4577471.

Meckler, G.; 11 Oct 1975, Circulating system, U. S. Patent #3918525.

Meckler, G.; 1991, "Comparative energy analysis of gas-energized desiccant cold-air unit," ASHRAE Winter Meeting - Technical Papers. ASHRAE Transactions pt 1. Publ by ASHRAE, Atlanta, GA, USA. p 637-641, New York, NY, USA, 1991 Jan 19-23.

Meckler, G.; 13 Jan 1987, Dehumidification apparatus, U. S. Patent #4635446.

Meckler, G.; 9 Feb 1988, Dehumidification apparatus, U. S. Patent #4723417.

Meckler, G.; 1988, "Efficient integration of desiccant cooling in commercial HVAC systems," ASHRAE annual meeting (technical papers) Volume 94, Part 2, Ottawa (Canada), 25-29 Jun 1988. Atlanta, GA: American Society of Heating Refrigeration and Air Cond., pp. 2033-2044.

Meckler, G.; 1986, "Energy-integrated HVAC systems use nonrefrigerated cooling techniques," ASHRAE semi-annual meeting. ASHRAE Trans. (United States) Volume 92 part 1B, San Francisco, CA, USA, 19 Jan 1986. pp. 887-900.

Meckler, G.; 1986, "Solar cooling system reduces summer utility demand and HVAC system life-cycle cost in commercial and institutional buildings," Proceedings of the 21st intersociety energy conversion engineering conference, San Diego, CA, USA, 25 Aug 1986. Washington, D.C.: American Chemical Society, pp. 1194-1197.

Meckler, G.; 1987, "Solar dehumidification system applications," Solar engineering - 1987. ASME/JSME/ISES solar energy conference, Honolulu, HI, USA, 22 Mar 1987. New York, NY: American Society of Mechanical Engineers, pp. 855-860.

Meckler, G.; 1990, "Gas/electric cold-air systems", ASHRAE Journal, Vol. 32, June 1990, No. 6; pp. 7.

Meckler, G.; 1988, "Solar dehumidification clinic/nursing home application," Proceedings of the 23rd intersociety energy conversion engineering conference Volume 4: Wind energy, solar energy, energy conservation and conversion, innovative concepts, alternative fuels, solid waste energy, Denver, CO, USA, 31 Jul 1988. New York, NY: American Society of Mechanical Engineers, pp. 189-194.

Meckler, G.; 1989, "Two-Stage Desiccant Dehumidification in Commercial Building HVAC Systems", ASHRAE Transactions, Vol. 95, No. 2; pp. 1116-1123.

Meckler, G.; 1990, "Use of Desiccant to Produce Cold Air in Gas-Energised Cold Air HVAC System", ASHRAE Transactions, Vol. 96, No. 1; pp. 1257-1261.

Meckler, Gershon; 1983, "Practical solar cooling achieved through desiccant dehumidification with solar regeneration in an integrated selective energy system," To Build and Take Care of What We Have Built with Limited Resources, CIB 83, The 9th CIB Congress, Aug 15-19 1983. Gavle, Sweden: Natl Swedish Inst for Building Research, pp. 95-106.

Meckler, Gershon; Mar-Apr 1984, "Cooling buildings by solar energy", Batiment International/Building Research & Practice, Vol. 17, No. 2; pp. 85-90.

Meckler, Gershon; 1983, "New technology achieves savings through solar cooling," Energy Technology 10, Proceedings of the 10th Energy Technology Conference: A Decade of Progress, Feb 28-Mar 2 1983. Rockville, Md, USA: Government Inst Inc, pp. 1392-1401.

Meckler, M.; 1989, "Hybrid solar HVAC cogeneration/desiccant cooling combined cycle," Solar engineering - 1989. 11th annual American Society of Mechanical Engineers solar energy conference, San Diego, CA (USA), 2-5 Apr 1989. New York, NY: American Society of Mechanical Engineers, pp. 379-390.

Meckler, M.; 1988, "Integrated disiccant cooling/TES/cogeneration systems Proceedings of the gas utilization engineering and marketing symposium," American Gas Association (AGA) gas utilization engineering and marketing symposium, Baltimore, MD (USA), Oct 12-13, 1988. Arlington, VA (USA): American Gas Association, pp. 90-104.

Meckler, M.; 1989, "Integrated desiccant cold air distribution system", ASHRAE Transactions (American Society of Heating, Refrigerating and Air-Conditioning Engineers) (USA). 1989 ASHRAE annual meeting, Vol. 95, No. 2; pp. 1085-1097.

Meckler, M.; Mar 91, Liquid Desiccant Energy Storage System Utilizing Prime Mover Waste Heat Final rept. on Phase 1, Mar 89-Mar 91, 1557929 PB91-232074/XAB GRI-91/0161. Meckler Energy Group, Encino, CA. 101735000. 144.

Meckler, M.; 1991, "New developments in desiccant cooling," HVAC and Building Systems congress '91 - Lighting Efficiency Congress '91 - Cogeneration Project Development '91 and Environmental Management Congress '91, Anaheim, CA (USA), Apr 23-24, 1991. pp. 31, Paper 8.

Meckler, M.; 1988, "Off Peak Desiccant Cooling and Cogeneration Combine to Maximise Gas Utilization", ASHRAE Transactions, Vol. 94, No. 1; pp. 575-596.

Meckler (Gershon) Associates, Washington DC (USA); 15 Jul 1976, Study of the application of solar chemical dehumidification system to wind tunnel facilities of NASA Lewis Research Center at Cleveland, Ohio, N-77-20116 NASA-CR-149886. Meckler (Gershon) Associates, Washington, DC (USA).

Mei, Biung Chung; 1979, Heat and mass transfer in air cooled desiccant dehumidifier, PhD Thesis, Chicago, IL: Illinois Institute of Technology.

Mei, V. C.; Chen, F. C.; Sullivan, R. A.; 1991, "Analysis of non-CFC automotive air conditioning," International chlorofluorocarbon (CFC) and halon alternatives conference, Baltimore, MD (USA), Dec 3-5, 1991. pp. 9.

Mei, V.; Ghezelayagh, H.; Gidaspow, D.; Lavan, Z.; 1979, "Development of a solar dessicant dehumidifier--2," 14th intersociety energy conversion conference. Proc., Intersoc. Energy Convers. Eng. Conf. (USA), pp. 264-268.

Mei, V.; Lavan, Z.; Nov 1979, Cross-cooled dehumidifier model test results and computer simulations, DOE/CS/31589-3 DES-79-2. Illinois Inst. of Tech., Chicago (USA).

Mei, V. C.; Lavan, Z.; Aug 1983, "Performance of cross-cooled desiccant dehumidifiers", J. Sol. Energy Eng. (USA), Vol. 105, No. 3; pp. 300-304.

Mei, V.; Worek, W.; Mathiprakasam, B.; Lavan, Z.; 1979, "Solar operated crossflow desiccant cooling system," SUN II International Solar Energy Society meeting, Atlanta, GA, USA, 28 May 1979. Elmsford, NY: Pergamon Press Inc., pp. 671-675.

Melody, I.; Jan-Feb 1991, "Solar cooling research for hot, humid climates", Solar Today (USA), Vol. 5, No. 1; pp. 23-24.

Meredith, D. B.; Wilbur, P. J.; 1979, "Desiccant/rock bed method of solar cooling with air collectors," 14th intersociety energy conversion conference. Proc., Intersoc. Energy Convers. Eng. Conf. (USA), pp. 274-277.

Merriam, Richard; Apr 77, Solar Air - Conditioning Study Final rept, ADL-C-79679; CEL-CR-77.018. Little (Arthur D) Inc Cambridge Mass.

Merrifield, D. V.; Fletcher, J. W.; Dec 77, Analysis and Development of Regenerated Desiccant Systems for Industrial and Agricultural Drying. Final Report, April--December 1977, ERA citation 04:008477. Lockheed Missiles and Space Co., Inc., Huntsville, AL. Huntsville Research and Engineering Center.

Meunier, F.; Mischler, B.; Guilleminot, J. J.; Simonot, M. H.; 1979, "Use of a zeolithe 13X-H/sub 2/O intermittent cycle for the application to solar climatization of buildings SUN II," International Solar Energy Society meeting, Atlanta, GA, USA, 28 May 1979. Elmsford, NY: Pergamon Press Inc., pp. 739-743.

Meunier, F.; 1986, "Theoretical performances of solid adsorbent cascading cycles using the zeolite-water and active carbon-methanol Paris: four case studies", Journal of Heat Recovery Systems, Vol. 6, No. 6; pp. 491-498.

Meunier, F.; Kinsella, E.; Vokaer, D.; Steemers, T. C.; 1982, Intermittent cycles using solid absorbents for solar cooling Extended abstracts of final reports in the field of solar energy applications to dwelling, EUR-7977-EN.

Meunier, F.; Mischler, B.; 1979, "Solar cooling through cycles using microporous solid adsorbents," SUN II International Solar Energy Society meeting, Atlanta, GA, USA, 28 May 1979. Elmsford, NY: Pergamon Press Inc., pp. 676-680.

Miles, D. J.; Shelton, S. V.; Kohler, J. A.; Lu, J. W. B; 1986, "Heat transfer in air conditioning and refrigeration equipment - Analysis of a solid adsorbent heat driven heat pump," American Society of Mechanical Engineers winter meeting. HTD - Volume 65, Anaheim, CA, USA, 7 Dec 1986. New York, NY: American Society of Mechanical Engineers, pp. 55-60.

Miller, E. B.; Fonda, B. P.; 1933, Rotary Adsorber Unit, U. S. Patent #1 912 784.

Miller, W. M.; Dec 1983, "Energy storage via desiccants for food/agricultural applications", Energy Agric. (Netherlands), Vol. 2, No. 4; pp. 341-354.

Miller, William M.; 1979, "Surface drying fresh citrus with dehumidified air," Paper ASAE For presentation at the Winter Meet Pap 79-6546, New Orleans, La, Dec 11-14 1979. St. Joseph, Mich: ASAE, pp. 1-13.

Mitchell, J. W.; Beckman, W. A.; Nelson, J. S.; Oct 1978, "Simulations of the performance of open cycle solar-desiccant systems," 3rd workshop on the use of solar energy for the cooling of buildings, San Francisco, CA, USA, 15 Feb 1978. pp. 108-115, CONF-780249.

Mitchell, J. W.; Van den Bulck, E.; Klein, S. A.; 1984, "The design of dehumidifiers for use in desiccant cooling and dehumidifier," Joint ASME/AICHE Heat Transfer Conference., Niagra Falls, NY, 5-8 Aug. 1984. New York, NY: American Society of Mechanical Engineers, pp. in paper #84-HT-32.

Molle, N.; Cramer, T. L.; 1986, "The dimensioning and experimentation of a solid adsorption heat pump," Proceedings of the 1986 International gas research conference, Toronto, Canada, 8 Sep 1986. Rockville, MD: Government Institutes Inc., pp. 658-666.

Monnier, J. B. G; 1981, Cooled-bed solar-powered desiccant cooling: field-testing and second law analysis, PhD Thesis, Chicago, IL: Illinois Institute of Technology.

Monnier, J. B.; Worek, W. M.; Lavan, Z.; 1981, "Testing of a solar powered cooling system using cross-cooled desiccant dehumidifiers," Annual conference of the International Solar Energy Society. Proc. Annu. Meet. - Am. Sect. Int. Sol. Energy Soc. (United States), Philadelphia, PA, USA, 26 May 1981. pp. 505-509.

Moore, F.; Cantrell, J.; Willeke, G.; 1979, "Dual desiccant-bed dehumidifier with solar-heated regeneration," SUN II International Solar Energy Society meeting, Atlanta, GA, USA, 28 May 1979. Elmsford, NY: Pergamon Press Inc., pp. 1647-1650.

Moore, R. A.; Filed date 15 Dec 1986 3 Nov 1987, Solar cooling apparatus, U. S. Patent #4,703,629.

Mukherjea, R. N.; Bose, P. K.; 1981, "Application of adsorption/desorption unit operations in cryogenics," Chemasia, 2nd Asian International Chemical and Process Engineering and Contracting Show and Conference. Sess 10, Oct 21-24 1981. pp. 1-12.

Mullick, S. C.; Gupta, M. C.; 1973, "Simple method for desorption of water by solar heating of the absorbent solution used for dehumidification of room air," International congress on the sun in the service of mankind, Unesco House, Paris, France, 2 Jul 1973. pp. EH.100.1-EH.100.12, CONF-730747-(EH).

Mullick, S. C.; Gupta, M. C.; Jul 1976, Solar air conditioning using absorbents Use of solar energy for the cooling of buildings, SAN-1122-76/2. Atlas Corp., Santa Clara, CA (USA).

Mullins, M. E.; Nov 1987, Porous-glass materials as desiccants. Final report, March-September 1987, PB-88-142138/XAB. Research Triangle Inst., Research Triangle Park, NC (USA).

Mullins, M. E.; Cornilsen, B. C.; Jun 90, Fundamental Research on Porous Glass Desiccants. Annual Report, May 1989-April 1990, 1482894 PB90-260530/XAB GRI-90/0162. Michigan Technological Univ., Houghton. 011343000. 75.

Munters, C. G.; 1968, Inorganic, Fibrous, Gas-Conditioning Packing for Heat and Moisture Transfer, U. S. Patent #3 377 225.

Murali, K. S.; Srinivasa, M. S.; 1989, "Experiments on a silica gel rotary dehumidifier", Heat Recovery Systems and CHP (UK), Vol. 9, No. 5; pp. 467-473.

Nagda, N. L.; Trehan, A. K.; Fortmann, R. C.; Feb 1991, Cooling performance evaluation of a gas heat pump and a prototype liquid desiccant dehumidifier in two contemporary research houses. Topical report, June-September 1988, PB-91-155515/XAB GEOMET-IE--1977. GEOMET Technologies, Inc., Germantown, MD (USA) 9519498. (129 p).

Namkoong, D.; 1976, "Performance of a LiBr water chiller in a laboratory-scale, experimental solar system test loop," Joint conference of the American Section of the International Solar Energy Society and The Solar Energy Society of Canada, Inc. Sharing the Sun: Solar Technology in the Seventies. Volume 3, Winnipeg, Manitoba, Canada, 15 Aug 1976. Cape Canaveral, FL: American Section of the International Solar Energy Society, pp. 44-45, CONF-760842--P3.

Nasenbeny, Robert J.; Jan 1986, "Energy system bails out nineteenth-century courthouse", Specifying Engineer, Vol. 55, No. 1; pp. 76-78.

Nataf, J.-M.; Winkelmann, F.; Feb 1991, Dynamic simulation of a liquid desiccant cooling system using the Energy Kernel System, LBL-29610 DE91010273. Lawrence Berkeley Lab., CA (USA) 9513034.

National Aeronautics and Space Administration; 28 Nov 75, Development of a Solar-Powered Residential Air Conditioner Final Summary Report, NASA-CR-144234. NASA.

National Aeronautics and Space Administration, Washington DC; Nov 88, Short-Cycle Adsorption Refrigerator: Each adsorption unit includes a long-lived nonmechanical heat switch, NPO-16571/TN. NASA, Washington, DC.

Nelson, J. S.; 1976, An Investigation of Solar Powered Open Cycle Air Conditioners, MS Thesis, Madison, WI: Univ. of Wisconsin - Madison.

Nelson, J. S.; Beckman, W. A.; Mitchell, J. W.; 1977, "Simulations of the performance of open cycle desiccant cooling systems," Solar World meeting. Proceedings of the 1977 annual meeting of the American Section of the International Solar Energy Society. Volume 1, Sections 1-13, Orlando, FL, USA, 6 Jun 1977. Cape Canaveral, FL: American Section of the International Solar Energy Society, pp. 7.20-7.23, CONF-770603--P1.

Nelson, J. S.; Beckman, W. A.; Mitchell, J. W.; Close, D. J.; 1978, "Simulations of the performance of open cycle desiccant systems using solar energy", Sol. Energy (USA), Vol. 21, No. 4; pp. 273-278.

Nelson, P. E.; 1981, "Results and preliminary analysis of a passive solar desiccant dehumidifier," Annual conference of the International Solar Energy Society. Proc. Annu. Meet. - Am. Sect. Int. Sol. Energy Soc. (USA), Philadelphia, PA, USA, 26 May 1981. pp. 1024-1026.

Nelson, P. E.; McDougal, G.; Haves, P.; 1981, "Economic analysis of desiccant dehumidifiers in passive solar residences," Annual conference of the International Solar Energy Society. Proc. Annu. Meet. - Am. Sect. Int. Sol. Energy Soc. (USA), Philadelphia, PA, USA, 26 May 1981. pp. 949-951.

Nelson, Peter; Haves, Phil; 1981, "Design and operating strategies and sizing relationships for solar regenerated desiccant dehumidifiers used with passive cooling systems," Passive Cooling, International Passive and Hybrid Cooling Conference, Nov 6-16 1981. Newark, Del, USA: Am Sect of the Int Sol Energy Soc, pp. 315-31.

Nelson, Peter E.; Haves, Philip; 1981, "Experimental validation of a computer model of a solar regenerated desiccant dehumidification system," Passive Cooling, International Passive and Hybrid Cooling Conference, Nov 6-16 1981. Newark, Del, USA: Am Sect of the Int Sol Energy Soc, pp. 325-32.

Newton, A. B.; 1977, Applications of solar energy for heating and cooling of buildings, ASHRAE/ GRP-170. American Society of Heating Refrigerating and Air Conditioning Engineers. New York, NY: American Society of Heating, Refrigerating and Air Conditioning Engineers.

Newton, A.; 1981, Solar Energy Handbook, New York, NY: McGraw-Hill, Inc. pp. 15.1-15.44.

Ng, A. H.; 1987, "Feasibility Study of a Desiccant Based Air Conditioning System Suitable for use in the Tropics," Far East Conference on Air Conditioning in Hot Climates USA, ASHRAE, Singapore, September 1987. 252-262.

Niagara Blower Company; 1989, Research Bulletin RB-11-14-88, Bulletins 162A, 179, and Application Bulletin 2107.

Nienberg, J. W.; 1977, Modeling of desiccant performance for solar desiccant-evaporative cooling systems, MS Thesis, Los Angeles: Univ. of California.

Nijaguna, B. T.; 1982, "Solar dessicant dehumidifier," Solar Energy Society of India National Solar Energy Convention, New Delhi, India, 17 Dec 1982. New Delhi, India: Allied Publishers Private Ltd., pp. 10.025-10.027.

Novak, K. S.; Wood, B. D.; Nelson, D. J.; May 1986, Open-cycle absorption solar cooling. Part I. Combined heat and mass transfer on an open flow liquid absorbent solar collector/regenerator. Final report, ERC-R-86020A. Arizona State Univ., Tempe (USA). Solar Energy Lab.

Novosel, D.; 1988, "Desiccant Air Conditioner to Control IAQ in Residences," USA ASHRAE Conference IAQ 88 Engineering Solutions to Indoor Air Problems ASHRAE, Atlanta, GA, April 11-13, 1988. pp. 148-165.

Novosel, D.; Griffiths, W.; 1989, "Active humidity control through gas-fired desiccant Humidity Pump," 16th annual energy technology conference. Energy technology XVI, Washington, DC, USA, 28 Feb - 2 Mar 1989. Rockville, MD: Government Institutes Inc., pp. 384-397.

Novosel, D.; 1991, Summary of Desiccant Cooling Program, Chicago, IL: Gas Research Institute.

Novosel, D.; Relwani, S. M.; Moschandrus, D. J.; 1987, "Development of a Desiccant-Based Environmental Control Unit," IAQ 87, Practical Control of Indoor Air Problems USA, American Society of Heating, Refrigerating, and Air Conditioning Engineers, Inc., Arlington, VA, May 1987. 261-264.

Ohigashi, T.; Kishimoto, T.; Imamura, Y.; Shimada, M.; Komagata, H.; Jun 1983, "Study on dehumidifying cooling using activated carbon fiber as desiccant," VDI Society of German Engineers conference on precipitation. Progress in solar energy. Volume 6. Engineering Division, Lindau, F.R. Germany, 7 Jun 1983. pp. 205-209, CONF-830662-Pt.4.

Olsen, T. G.; 1976, "Desiccant systems potential for cooling in humid climates," Solar cooling and heating: a national forum, Miami Beach, FL, USA, 13 Dec 1976. pp. 289-290, CONF-761220.

Olsen, T. G.; Swartman, R. K.; 1976, "Solar air conditioning applications for warm humid climate," Joint conference of the American Section of the International Solar Energy Society and The Solar Energy Society of Canada, Inc. Sharing the Sun: solar technology in the seventies. Volume 10, Winnipeg, Manitoba, Canada, 15 Aug 1976. Cape Canaveral, FL: American Section of the International Solar Energy Society, pp. 126-134, CONF-760842--P10.

Onischak, M.; Gidaspow, D.; Perkari, S.; Sasaki, T.; Oct 1979, Dynamic performance characterization of bound, porous silica gel desiccant, DOE/CS/31589-2 DES-79-1. Illinois Inst. of Tech., Chicago (USA).

Oonk, R. L.; Shaw, L. E.; Cash, M.; Hughes, P. J.; Mitchell, J. W.; 1978, "Performance of solar-desiccant cooling systems in New York City," Meeting of the American Section of the International Solar Energy Society. Solar diversification. Vol 2.1, Denver, CO, USA, 28 Aug 1978. Newark, DE: American Section of the International Solar Energy Society, Inc., pp. 460-467.

Oonk, R. L.; Shaw, L. E.; Cash, M.; Oct 1978, "Simulation of air based solar desiccant cooling systems," 3rd workshop on the use of solar energy for the cooling of buildings, San Francisco, CA, USA, 15 Feb 1978. pp. 90-107, CONF-780249.

Parsons, B. K.; Pesaran, A. A.; Bharathan, D. K.; Shelpuk, B.; April 1987, Evaluation of Thermally-Activated Heat pump/Desiccant Air Conditioning Systems and Components, DRAFT SERI/TR-252-3116. Solar Energy Research Institute Golden, CO.

Parsons, B. K.; Pesaran, A. A.; Bharathan, D.; Shelpuk, B.; Sep 1988, "Improving gas-fired heat pump capacity and performance by adding a desiccant dehumidification subsystem," ASHRAE winter symposium, Chicago, IL, USA, 28 Jan - 1 Feb 1989. pp. 25, SERI/TP-254-3402 CONF-890105-2.

Passos, E. F.; Escobedo, J. F.; Meunier, F.; 1989, "Simulation of an intermittent adsorptive solar cooling system", Solar Energy (USA), Vol. 42, No. 2; pp. 103-111.

Patch, K. D.; DiBella, F. A.; Becker, F. E.; Jul 90, Desiccant-based, heat-actuated cooling assessment for DHC systems. Final report, May 1, 1989-May 31, 1990 Progress rept, 1505682 DE90015516/XAB DOE/CE/26593-1; TR-4471-058-90. Tecogen, Inc., Waltham, MA. 089038000; 9520951. 59p.

Patnaik, S.; Lenz, T. G.; Löf, G. O. G.; 1988, "Experimental studies with a solar open-cycle liquid desiccant cooling system," Advances in solar energy technology. V. 1. Proceedings of the biennial congress of the International Solar Energy Society, Hamburg, F.R. Germany, 13-18 Sep 1987. Oxford, GB: Pergamon Press, pp. 1013-1018.

Patnaik, S.; Lenz, T. G.; Löf, G. O. G.; 1990, "Performance studies for an experimental solar open-cycle liquid desiccant air dehumidification system", Sol. Energy, Vol. 44, No. 3; pp. 123-35.

Patnaik, S.; Lenz, T. G.; Löf, G. O. G.; 1988, "Solar open-cycle liquid desiccant cooling studies," 10th annual American Society of Mechanical Engineers solar energy conference. Solar engineering - 1988, Denver, CO, USA, 10 Apr 1988. New York, NY: American Society of Mechanical Engineers, pp. v.

Peck, J. F.; Kessler, H. J.; Thompson, T. L.; 1980, "Passive and hybrid cooling strategies in hot arid climates," 5th national passive solar conference. Passive-cooling-applications handbook, Amherst, MA, USA, 19 Oct 1980. pp. 65-77, LBL-PUB-375-Rev. CONF-801016-(Vol.3).

Peng, C. S. P; 1980, Analysis and design of liquid absorbent/desiccant cooling/dehumidification systems for low grade thermal energy applications, PhD Thesis, Austin, TX: Univ. of Texas.

Peng, C. S. P.; Howell, J. R.; Feb 1981, "Analysis and Design of Efficient Absorbers for Low-Temperature Desiccant Air Conditioners", Journal of Solar Energy Engr, Vol. 103, No. 1; pp. 67-74.

Peng, C. S. P.; Howell, J. R.; Jan 1982, "Analysis and simulation of an efficient liquid desiccant system for warehouse dehumidification," Semi-annual meeting of the American Society of Heating, Refrigerating, and Air Conditioning Engineers. ASHRAE Trans. (USA) Volume 88, Houston, TX, USA, 24 Jan 1982. pp. 1097-1112.

Peng, C. S. P.; Howell, J. R.; 14 Jul 1980, "Optimization of liquid desiccant systems for solar/geothermal dehumidification and cooling," 15th AIAA thermophysics conference and 13th AIAA fluid and plasma dynamics conference. AIAA Pap. (USA).

Peng, C. S. Patrick; Howell, John R.; 1981, "Optimization of liquid desiccant systems for solar/geothermal dehumidification and cooling", Journal of Solar Energy Engr, Vol. 5, No. 6; pp. 401-8.

Peng, P.; Howell, J. R.; 1980, "Analysis and design of efficient absorbers for low-temperature desiccant air conditioners," American Society of Mechanical Engineers Annual Meeting, Aug 19-21 1980. New York, NY, USA: ASME, pp. 1-9.

Peng, C. S. P.; Howell, J. R.; 1984, "The performance of various types of regenerators for liquid desiccants", Journal of Solar Energy Engr, Vol. 106, No. 2; pp. 133-41.

Penney, T. R.; Jul 1985, "Desiccant cooling research," Solar buildings: realities for today - trends for tomorrow. Solar Buildings Conference Proceedings, Washington, DC, USA, 18 Mar 1985. pp. 71.

Penney, T. R. (ed.); Oct 89, Desiccant Cooling and Dehumidification Opportunities for Buildings Workshop, Chattanooga, TN, June 10-11, 1986. pp. 1-211, SERI/CP-254-3000.

Penney, T. R.; Groff, G. C.; Parsons, B. K.; 1988, "Advances in Desiccant Cooling Systems for Buildings Space Conditioning," Presented at Second European Symposium on Air Conditioning and Refrigeration, Brussel, Belgium, November 22-26 1988.

Penney, T. R.; Maclaine-cross, I.; Jul 1985, "Advances in open-cycle solid desiccant cooling," Solar buildings: realities for today - trends for tomorrow. Solar Buildings Conference: Proceedings, Washington, DC, USA, 18 Mar 1985. pp. 72-85, SERI/TP-252-2683 CONF-850388-9.

Penney, T. R.; Maclaine-cross, I. L.; May 1985, Promising Advances in Desiccant Cooling, SERI/TP-252-2683. Solar Energy Research Institute Golden, CO.

Penney, T. R.; Pesaran, A. A.; Thomas, T. M.; Czanderna, A. W.; 1985, "Capacity Degradation of Field Tested Silica Gel Samples," INTERSOL '85 - Solar Energy--the Diverse Solution. Proceedings of the Ninth Biennial Congress of the International Solar Energy Society, Montreal,Quebec, Canada, 23-29 Jun 1985. Elmsford, NY: Pergamon Books Inc., pp. 689-693.

Pennington, N. A.; 1955, Humidity Changer for Air Conditioning, U. S. Patent #2 700 537.

Pesaran, A. A.; 1987, "Adiabatic Air Dehumidification in Laminar Flow Desiccant Matrices," ASME Winter Meeting. Solar Energy Technology SED-Vol. 4, Boston, MA, USA, 13-18 Dec 1987. New York, NY: American Society of Mechanical Engineers, pp. 31-40, SERI/TP-252-3145.

Pesaran, A. A.; Nov 90, Degradation of desiccants upon contamination: An experimental study, 1521414 DE91002123/XAB SERI/TP-254-4095; CONF-910318-9. Solar Energy Research Inst., Golden, CO. 056095000; 9506687. pp. 21.

Pesaran, A. A.; 1990, "Desiccant contamination in desiccant cooling systems," Winter Annual Meeting of the American Society of Mechanical Engineers. Solar Energy in the 1990s American Society of Mechanical Engineers, Dallas, TX, USA, Nov 25-30, 1990. New York, NY (USA): ASME (Solar Energy Division (Publication) SED, pp. 19-26.

Pesaran, A. A.; Aug 90, Desiccant contamination in desiccant cooling systems, 1500562 DE90000349/XAB SERI/TP-254-3800; CONF-901109-20. Solar Energy Research Inst., Golden, CO. 056095000; 9506687. pp. 18.

Pesaran, A. A.; Nov 1984, "Experiments on Sorption Characteristics of Solid Desiccant Materials for Solar Desiccant Cooling Systems," ASME Solar Energy Conference--1985, Knoxville, TN, USA, 25-28 Mar 1985. New York, NY: The American Society of Mechanical Engineers, pp. 183-189, SERI/TP-252-2479, CONF-850306-1.

Pesaran, A. A.; Jul 1986, Heat and mass transfer analysis of a desiccant dehumidifier matrix, SERI/TR-252-2774. Solar Energy Research Inst., Golden, CO (USA).

Pesaran, A. A.; 1992, "Impact of Ambient Pressure on Performance of Desiccant Cooling Systems," Proceedings of ASME International Solar Energy Conference, Maui, Hawaii, April 4-8, 1992.

Pesaran, A. A.; 1983, Moisture transport in silica gel particle beds, PhD Dissertation, Los Angeles: Univ. of California.

Pesaran, A. A.; Feb 1983, Moisture transport in silica gel particle beds, UCLA-ENG-8310. California Univ., Los Angeles (USA). School of Engineering and Applied Science.

Pesaran, A. A.; Bingham, C. E.; July 1991, Desiccant Contamination Research: Report on the Desiccant Contamination Test Facility, SERI/PR-254-3457. Solar Energy Research Institute Golden, CO.

Pesaran, A. A.; Bingham, C. E.; 1989, "Facilities for testing desiccant materials and geometries of dehumidifiers for solar-regenerated desiccant cooling systems," 11th annual American Society of Mechanical Engineers solar energy conference. Solar engineering - 1989, San Diego, CA (USA), 2-4 Apr 1989. New York, NY: American Society of Mechanical Engineers, pp. 449-456 544.

Pesaran, A. A.; Bingham, C. E.; 1989, "Testing of Novel Desiccant Materials and Dehumidifier Matrices for Desiccant Cooling Applications," ASHRAE Summer Annual Meeting, ASHRAE Transactions, v. 95, pt. 1, Vancouver, B.C., 24 Jun 1989. pp. pp 1109-1123, SERI/TP-254-3478, CONF-890609-3.

Pesaran, A. A.; Choudhury, K.; February 1986, Silica-Gel Sorption Properties Under Adiabatic Conditions, SERI/TR-252-2704. Solar Energy Research Institute Golden, CO.

Pesaran, A. A.; Mills, A. F.; 1984, "Modeling of Solid-side Mass Transfer in Desiccant Particle Beds," Proceedings of the 6th Annual ASME Solar Energy Division Conference. Solar Engineering -- 1984, Las Vegas, NV, USA, 8-12 Apr 1984. New York, NY, USA: ASME, pp. 177-185.

Pesaran, A. A.; Mills, A. F.; June 1987, "Moisture Transport in Silica Gel Particle Beds. I. Theoretical Study", International Journal of Heat and Mass Transfer, Vol. 30, No. 6; pp. 1037-1049.

Pesaran, A. A.; Mills, A. F.; June 1987, "Moisture Transport in Silica Gel Particle Beds. II. Experimental Study", International Journal of Heat and Mass Transfer, Vol. 30, No. 6; pp. 1051-1060.

Pesaran, A.A.;Parson, B.K.;Parsons, J.M.; February 1988, Experimental and Analytical Studies of Parallel Passage Desiccant Dehumidifiers, SERI/TR-254-3286. Solar Energy Research Institute Golden, CO.

Pesaran, A. A.; Parsons, B. K.; December 1987, Status Report on Desiccant Materials Contamination Research, SERI/PR-254-3398. Solar Energy Research Institute Golden, CO.

Pesaran, A. A.; Penney, T. R.; 1991, "Impact of desiccant degradation on desiccant cooling system performance," ASHRAE Winter Meeting - Technical Papers. ASHRAE Transactions pt 1., New York, NY, USA, 1991 Jan 19-23. Atlanta, GA (USA): ASHRAE, pp. 595-601.

Pesaran, A. A.; Wipke, K.; 1992, "Desiccant Cooling using Unglazed Transpiral Solar Collectors," Proceedings ASES National Energy Conference, Cocoa Beach, FL, June 13-18, 1992.

Pesaran, A. A.; Thomas, T. M.; Penney, T. R.; Czanderna, A. W.; September 1986, Methods to Quantify Contamination Effects on Silica Gel Samples, SERI/TR-252-2802. Solar Energy Research Institute Golden, CO.

Pesaran, A.; Zangrando, F.; Aug 1984, Experiments on sorption hysteresis of desiccant materials, SERI/TR-252-2382. Solar Energy Research Inst., Golden, CO (USA).

Pesaran, A. A.; Zangrando, F.; Jun 1985, "Isothermal dehumidification of air in a parallel passage configuration," National heat transfer conference, Denver, CO, USA, 4-7 Aug 1985. pp. 12, SERI/TP-252-2630 CONF-850810-23.

Pitts, R.; Czanderna, A.; Feb 1980, Design for a gas chromatograph for characterizing desiccant material, SERI/RR-334-550. Solar Energy Research Inst., Golden, CO (USA).

Pla-Barby, F. E.; 1981, "Analysis of the performance of a silica gel rotary air dryer," First international solar cooling and dehumidifying conference, Caracas, Venezuela, 3 Aug 1980. Oxford, England: Pergamon Press Ltd., pp. 217-237.

Pla-Barby, F. E.; 1978, Solid desiccant air conditioning with silica gel using solar energy, PhD Thesis, Austin, TX: Univ. of Texas.

Pla-Barby, F. E.; Vliet, G. C.; 1979, "Rotary bed solid desiccant drying: an analytical and experimental investigation," American Society of Mechanical Engineers (Paper n 79-HT-19), Aug 6-8 1979. New York, NY, USA: ASME, pp. 1-9.

Pons, M.; Grenier, Ph; 1985, "Solar ice maker working with activated carbon-methanol adsorbent-adsorbate pair," INTERSOL '85 - Solar energy--the diverse solution. Proceedings of the ninth biennial congress of the International Solar Energy Society, Montreal, Canada, 23 Jun 1985. Elmsford, NY: Pergamon Books Inc., pp. 731-735.

Pons, M.; Guilleminot, J. J.; Nov 1986, "Design of an experimental solar-powered, solid-adsorption ice maker", J. Sol. Energy Eng. (USA), Vol. 108, No. 4; pp. 332-337.

Popelka, A.; Cohen, B.; Buchler, D.; Slosberg, S.; Wysk, S. R.; Mar 89, Advanced Desiccant Cooling System Development. Residential Laboratory Prototype Testing. Topical Report, November 1987-March 1989, 1491037 PB91-101915/XAB TR4315-047-89; GRI-87/0043.4. Tecogen, Inc., Waltham, MA. 089038000. pp. 50.

Prasad, M.; Kumar, P.; 1984, "Experimental and analytical study of non-conventional air conditioning system", Energy Convers. Manage. (United Kingdom), Vol. 24, No. 3; pp. 165-170.

Prasad, T. S.; Williamson, A. G.; 1982, "Survey of solar refrigeration/cooling," CHEMECA 82 - 10th Australian Chemical Engineering Conference 1982, Resource Developments in the Eighties, Aug 24-26 1982. Barton, Australia: National Conference Publication - Institution of Engineers, pp. 253-259.

Price, J. M.; Wu, S. T.; Christensen, D. L.; 1978, "Early developments in solar cooling equipment," 3rd conference on application of solar energy, Huntsville, AL, USA, 17 Apr 1978. Huntsville, AL: Univ. of Alabama, pp. 249-252.

Pusatcioglu, S. Y.; Oct 1990, Desiccation processes and materials. Final report, February 1987-September 1990, PB-91-194308/XAB. Eaton Corp., Milwaukee, WI (USA). Corporate Research and Development-Milwaukee Center 9529715. pp. 124.

Pusatcioglu, S.; Novosel, D.; 1989, Desiccant Processes and Materials, GRI Contract No. 5087-293-1462. Chicago, IL: Gas Research Institute.

Pyun, Hyung Chick; Kim, Nak Bae; Kim, Ki Yup; Yoon, Byung Mock; Koo, Je Hue; Apr 85, Studies on the Quality Control of Reactor Water and Adsorption Characteristics of Ion Exchange Resin, KAERI/RR-444/84. Korea Advanced Energy Research Inst., Daeduk (Republic of Korea).

Queiroz, A. G.; Orlando, A. F.; Saboya, F. E. M.; 1984, "Performance Analysis of an Air Dryer for a Liquid Dehumidifier Solar Air Conditioning System," 1984 ASME Winter Annual Meeting, New Orleans, LA ASME Paper 84-WAM/sol-6.

Raghavan, V.; Gidaspow, D.; 1983, "Diffusion and adsorption of moisture in desiccant sheets for solar air conditioning," ASME-JSME Thermal Engineering Joint Conference Proceedings, Mar 20-24 1983. New York, NY, USA: ASME, pp. 473-480.

Raghavan, Vaikuntam; Gidaspow, Dimitri; 1985, "Diffusion and adsorption of moisture in desiccant sheets", AIChE J, Vol. 31, No. 11; pp. 1791-800.

Rau, J. J.; 1989, Thermodynamic Characteristics of Lithium Chloride in Rotary Heat and Mass Exchangers, MS Thesis, Madison, WI: Univ. of Wisconsin - Madison.

Ray, Rod; 1985, "Memebran-based water-and energy-recovery systams for the manned space station," Fifteenth Intersociety Conference on Environmental Systems. SAE Technical Paper Series 851345, Jul 15-17 1985. Warrendale, PA, USA: SAE, pp. 1-14.

Redman, C. M.; Jan 1985, Experimental testing of cooling by low pressure adsorption in a zeolite, PNL-5365. New Mexico State Univ., Las Cruces (USA). New Mexico Solar Energy Inst.

Relwani, S. M.; Moschandreas, D. J.; Thomas, O. R.; Apr 90, Development of an energy efficient desiccant dehumidifier. Final report Progress rept, 1534131 DE91009690/XAB DOE/BP/35544-1. IIT Research Inst., Chicago, IL. 009229000; 3092000l;. pp. 139.

Relwani, S. M.; Moschandreas, D. J.; Aug 1986, Indoor pollution control capabilities of a desiccant dehumidifier system. Final report, July 1985-August 1986, PB-87-114120/XAB IITRI-C-08840-FR. IIT Research Inst., Chicago, IL (USA).

Restuccia, G.; Cacciola, G.; Recupero, V.; Di, Leonardo R.; 1985, "Energy storage by adsorption of water on zeolite for building heating," Enerstock 85. 3rd International conference on energy storage for building heating and cooling. Proceedings, Toronto, Canada, 22 Sep 1985. pp. 494-498, ITL-8509 CONF-850905 MICROLOG-89-00267.

Robinson, H. I.; Filed 11 Jun 1979, 8 Sep 1981, Chemical heat pump and method, U. S. Patent #4,287,721. Robinson, H. I.; Houston, S. H.; 1981, "Solar cooling by use of desiccants," 1st international solar cooling and dehumidifying conference, Caracas, Venezuela, 3 Aug 1980. Oxford, England: Pergamon Press Ltd., pp. 25.

Robinson, H.I.; Houston, S.H.; 1980, "Absorption/desorption solar cooling system performance," 72. AICHE meeting. AIChE Symp. Ser. (USA), San Francisco, CA, USA, 25 Nov 1979. pp. 139-143.

Robison, H.; 1977, "Liquid sorbent solar air conditioner," Miami international conference on alternative energy sources, Miami Beach, FL, USA, 5 Dec 1977. pp. 437, CONF-771203.

Robison, H.; 1980, "Liquid desiccant solar heat pump for developing nations," Sol Energy Int Prog, Proc of the Int Symp-Workshop on Sol Energy, Cairo, Egypt, Jun 16-22 1978. Elmsford, NY and Oxford, Engl: Pergamon Press, pp. 932-938.

Robison, H.; Aug 1983, "Operational experience with a liquid desiccant heating and cooling system," 18th intersociety energy conversion engineering conference. Proc., Intersoc. Energy Convers. Eng. Conf. (USA), Orlando, FL, USA, 21 Aug 1983. pp. 1952-1957.

Robison, H.; 1978, "Performance enhancement of sorbent solar air conditioners," Meeting of the American Section of the International Solar Energy Society. Solar diversification. Vol. 2.1, Denver, CO, USA, 28 Aug 1978. Newark, DE: American Section of the International Solar Energy Society, Inc., pp. 704-709.

Robison, H.; 1981, Solar air conditioning, DOE/R4/10217-T1. Robison (Harry), Pawleys Island, SC (USA).

Robison, H. I.; Bowen, A.; Yannas, S.; 1985, "Passive and low-energy research and practices - dehumidification," Conference on passive and low energy alternatives, Mexico City, Mexico, 6 Aug 1984. Elmsford, NY: Pergamon Press, pp. 88-120.

Robison, H.; Griffiths, W.; 1984, "Energy storage and heat pumping with liquid desiccants," 19th Intersociety Energy Conversion Engineering Conference: Advanced Energy Systems - Their Role in Our Future, Aug 19-24 1984. LaGrange Park, IL, USA: ANS, pp. 1344-1349.

Robison, H. I.; Houston, S. H.; Harper, W.; Mitchell, J. W.; 1979, "Open-cycle solar air conditioner," SUN II International Solar Energy Society meeting, Atlanta, GA, USA, 28 May 1979. Elmsford, NY: Pergamon Press Inc., pp. 667-669.

Robison, H.; Houston, S.; 1981, "Solar-powered saline sorbent-solution heat pump/storage system Coastal Energy Laboratory-Chemical Heat Pump (CEL-CHEAP)," 2nd Miami international conference on alternative energy sources. Altern. Energy Sources (United States), Miami Beach, FL, USA, 10 Dec 1979. pp. 447-451.

Robison, H.I.; 1982, "Open cycle chemical heat pump and energy storage system," Annual DOE Active Solar Heating and Cooling Contractors' Review Meeting: Proceedings and Project Summaries, Sep 9-11 1981. Washington, DC, USA: DOE, pp. 3. 26-3. 27, CONF-810912.

Robison, H. I.; Houston, S. H.; 1979, Thermochemical energy storage for heating and cooling, U. S. Patent #18 Mar 1979.

Robison, Harry I.; 1983, "Operational experience with a liquid desiccant heating and cooling system," Proc. Intersoc. Energy Convers. Eng. Conf 18th, pp. 1952-7.

Robison, H.I.; 1978, "Liquid desiccant solar air conditioner and energy storage system," Proceedings of the 13th Intersociety Energy Conversion Engineering Conference, San Diego, Calif, Aug 20-25 1978. Warrendale, Pa: SAE.

Robison, Harry; Harris, Howard; 1982, "Year-round operational test results of a chemical heat pump powered by waste heat, off-peak electricity, or solar energy," ENERGEX '82, A Forum on Energy Self-Reliance: Conservation, Production and Consumption, Conference Proceedings (8th Annual Conference of Solar Energy Society of Canada), Aug 23-29 1982. Winnipeg, Manit, Canada: Solar Energy Soc of Canada, Inc, pp. 151-153.

Rockenfeller, U.; Oct 1988, Solid-vapor adsorption refrigeration system development. Final report, October 1987-September 1988, PB-89-140859/XAB. Rocky Research Corp., Boulder City, NV (USA).

Rodda, E. D.; Rode, D. W.; 1978, "Desiccant dehumidifiers for drying grain," ASAE winter meeting. ASAE Tech. Pap. (USA), Chicago, IL, 13-16 Dec. 1977. pp. 1-9 in paper #77-3528.

Rohde, Wilhelm; 1985, "20 years of molecular sieves in air separation", Linde Rep Sci Technol, No. 40; pp. 48-51.

Rojas, F.; 1980, Pure Vapor Adsorption of Water on Silica Gels of Different Porosity, MS Thesis, Golden, CO: Colorado School of Mines.

Rousseau, J.; 1980, "Development of a solar desiccant dehumidifier," Proceedings of the annual DOE active solar heating and cooling contractors' review meeting, Lake Tahoe, NV, USA, 26 Mar 1980. pp. 3.5-3.6, CONF-800340.

Rousseau, J.; 27 Mar 1981, Development of a solar desiccant dehumidifier. Phase II. Technical progress report, DOE/CS/31591-T6. AiResearch Mfg. Co., Torrance, CA (USA).

Rousseau, J.; 16 Oct 1981, Development of a solar-desiccant dehumidifier. Phase II second technical progress report, DOE/CS/31591-T7. AiResearch Mfg. Co., Torrance, CA (USA).

Rousseau, J.; 1 Nov 1982, Development of a solar-desiccant dehumidifier. Phase II. Final summary report, DOE/CS/31591-T8. AiResearch Mfg. Co., Torrance, CA (USA).

Rousseau, J.; Hwang, K. C.; Oct 1978, "Preliminary design of a solar desiccant air conditioner," 3rd workshop on the use of solar energy for the cooling of buildings, San Francisco, CA, USA, 15 Feb 1978. pp. 122-131, CONF-780249.

Rublee, P. D.; Yen, H. H.; Apr 1986, Desiccant dehumidifier/cooling system development. Final report, December 1982-May 1985, PB-87-120044/XAB. Dunham-Bush, Inc., Harrisonburg, VA (USA).

Rudd, A.; 1990, "Description of an indoor test facility for evaluating a roof integrated cooling concept," Solar Engineering 1990 - Presented at the Twelfth Annual International Solar Energy Conference, Miami, FL, USA, Apr 1-4, 1990. New York, NY (USA): American Society of Mechanical Engineers (ASME), pp. 219-223.

Rush, W. F.; Jul 1976, Adsorption phenomena as applied to solar cooling, SAN-1122-76/2. Institute of Gas Technology, Chicago Atlas Corp., Santa Clara, CA (USA).

Rush, W.F.; 1979, "Development of a novel solar heating and cooling device," International symposium on engineering, San Salvador, El Salvador, 19 Feb 1979. Chicago, IL:Institute of Gas Technology, pp. 15.

Rush, W. F.; 1978, "Solar desiccant systems for heating and cooling," Energy from the sun Solar-MEC Symposium on energy from the sun, Chicago, IL, USA, 3 Apr 1978. Chicago, IL: Institute of Gas Technology, pp. 223-239.

Rush, W. F.; Macriss, R. A.; 1969, "Munters Environmental Control System", Appliance Engineer, March 1969, pp. 23-28.

Rush, W. R.; Staats, W. R.; Oct 1978, "Performance and potential of a desiccant cooling/heating system," 3rd workshop on the use of solar energy for the cooling of buildings, San Francisco, CA, USA, 15 Feb 1978. pp. 116-121, CONF-780249.

Rush, W. F.; Wurm, J.; Dufour, R. J.; 17 Jun 1975, Air conditioning apparatus and method, U. S. Patent #3,889,742.

Rush, W. F.; Wurm, J.; Dufour, R. J.; 12 Sep 1978, Air conditioning process Patent, U. S. Patent #4,113,004.

Rush, W. F.; Wurm, J.; Wright, L.; Ashworth, R. A.; 1975, "Description of the SOLAR-MEC field test installation," 1975 International Solar Energy Congress and Exposition Adsorption heating and cooling: SOLAR-MEC unit, Los Angeles, CA, USA, 28 Jul 1975. Rockville, MD: International Solar Energy Society, pp. 405-406, CONF-750712.

Ruthven, D. M.; 1984, Principles of Adsorption & Adsorption Processes, New York, NY: John Wiley & Sons. pp. 124-166.

Ryan, W.; Marsala, J.; Griffiths, W.; 1989, "Laboratory and field experiment results for a residential liquid desiccant dehumidifier," 11th annual American Society of Mechanical Engineers solar energy conference. Solar engineering - 1989, San Diego, CA (USA), 2-5 Apr 1989. New York, NY: American Society of Mechanical Engineers, pp. 353-362.

Sadasivam, M.; Balakrishnan, A. R.; 1991, "Analysis of thermal effects in packed bed liquid desiccant dehumidifiers", Chem. Eng. Process, Vol. 30, No. 2; pp. 79-85.

Sagredo, E. D.; Veziroglu, T. N.; 1985, "Development of a solar air conditioning system working between 71C (generator) and 35C (condenser)," 7th Miami international conference on alternative energy sources. Vol. 2 - Solar Energy 2, Miami Beach, FL, USA, 9 Dec 1985. New York, NY: Hemisphere Publishing, pp. 33-40.

Saito, T.; Takeshima, M.; Priority date 14 Feb 1979, Japan 9 Feb 1982, Method and system for regenerating dehumidifier for use in charcoal adsorber Patent, U. S. Patent #4,314,828.

Saito, Y.; 1985, "Regeneration performance of adsorbent in the integrated desiccant/collector," INTERSOL '85 - Solar energy--the diverse solution. Proceedings of the ninth biennial congress of the International Solar Energy Society, Montreal, Canada, 23 Jun 1985. Elmsford, NY: Pergamon Books Inc., pp. 682-686.

Saito, Y.; 1984, "Design and performance of an integrated desiccant/collector," Solar World Congress, Proceedings of the 8th Biennial Congress of the International Solar Energy Society, Aug 14-19 1983. Oxford, Engl & New York, NY, USA: Pergamon Press, pp. 140-144.

Saito, Y.; 1989, "Effects on regeneration characteristics of liquid absorbent in the desiccant/regenerator coupled to a heat pump system," Solar Engineering 1989 - Proceedings of the Eleventh Annual ASME Solar Energy Conference. American Society of Mechanical Engineers, Solar Energy Division (Publication), Apr 2-5 1989. New York, NY, USA: ASME, pp. 363-369.

Saito, Y.; Jul 1983, "Performance of an open-cycle solar cooling system", Energy Dev. Jpn. (United States), Vol. 6, No. 1; pp. 31-39.

Saito, Y.; 1987, "Regeneration characteristics of adsorbent in the integrated desiccant/collector," Solar Engineering - 1987, Proceedings of the ASME-JSME-JSES Solar Energy Conference, Mar 22-27 1987. New York, NY, USA: ASME, pp. 861-866.

Saito, Y.; Horigome, T.; Kimura, K.; Takakura, T.; Nishino, T.; Fujii, I.; 1990, "Regeneration in characteristics of liquid absorbent in the desiccant/regenerator," Clean and Safe Energy Forever. V. 1 - World congress of the International Solar Energy Society, Kobe (Japan), Sep 4-8, 1989. Oxford (GB) Pergamon Press, pp. 517-521 (925 p).

Sakoda, A.; Suzuki, M.; Feb 1984, "Fundamental study on solar powered adsorption cooling system", J. Chem. Eng. Jpn. (Japan), Vol. 17, No. 1; pp. 52-57.

Sakoda, A.; Suzuki, M.; 1986, "Simultaneous transport of heat and adsorbate in closed type adsorption cooling system utilizing solar heat", J. Sol. Energy Eng, Vol. 108, No. 3; pp. 239-45.

Samuel, A. A.; Vedamurthy, V. N.; Dec 1983, "A novel approach to dehumidify air with solar assisted regenerator," 6th Miami international conference on alternative energy sources, Miami Beach, FL, USA, 12 Dec 1983. pp. 266-269.

San, J. Y.; 1985, Energy analysis of desiccant cooling systems, PhD Thesis, Chicago, IL: Illinois Institute of Technology.

San, J. Y.; Lavan, Z.; Worek, W. M.; Monnier, J. B.; 1982, "Exergy analysis of solar powered desiccant cooling systems," American section of the International Solar Energy Society conference. Progress in solar energy: The Renewable Challenge, Houston, TX, USA, 1 Jun 1982. Boulder, CO: American Solar Energy Society, pp. 567-572.

San, Jung-Yang; 1990, "Analysis of a dual rotary solid desiccant cooling system", Chung-Kuo Chi Hsueh Kung Ch'eng Hsueh Pao/Journal of the Chinese Society of Mechanical Engineers, Vol. 11, June 1990, No. 3; pp. 275-283.

San, Jung-Yang; Jul 1988, "Effects of desiccant content and purging process on the performance of a rotary disiccant cooling system", Chung-kuo Kung Ch'eng Hsueh K'an/Journal of the Chinese Institute of Engineers, Vol. 11, No. 4; pp. 385-390.

Saunders, J. H.; Wilkinson, W. H.; 1989, "A hybrid space conditioning system combining a gas-fired chiller and a liquid desiccant dehumidifier," 11th annual American Society of Mechanical Engineers solar energy conference. Solar engineering - 1989, San Diego, CA (USA), 2-5 Apr 1989. New York, NY: American Society of Mechanical Engineers, pp. 207-212.

Sayigh, A. A. M.; 1988, "Solar energy cooling in building," International Solar Energy Society biennial congress on advances in solar energy technology. Advances in solar energy technology. V.3. Proceedings of the biennial congress of the International Solar Energy Society, Hamburg, F.R. Germany, 13-18 Sep 1987. Oxford, GB: Pergamon Press, pp. 2426-2433, 2442-2448.

Schaetzle, W. J.; Filed date 16 Jan 1984 9 Jul 1985, Cascade desiccant air-conditioning/air drying process and apparatus with cold thermal energy storage, U. S. Patent #4,527,398.

Schemmer, C. J.; 1989, "Humidification and Humidity in a Central Storage and Filing Building", ASHRAE Transaction, Vol. 95, No. 1; pp. 1278-1292.

Scheridan, J. C.; Mitchell, J. W.; 1985, "A hybrid solar desiccant cooling system", Sol. Energy (United Kingdom), Vol. 34, No. 2; pp. 187-193.

Schlepp, D. R.; Aug 1983, "A high performance dehumidifier for solar desiccant cooling systems," Proceedings of the 18th Intersociety Energy Conversion Engineering Conference, Orlando, FL, USA, 21 Aug 1983. New York, NY: American Institute of Chemical Engineers, pp. 1933-1939, SERI/TP-252-1979.

Schlepp, D.; Barlow, R.; Sep 84, Performance of the SERI (Solar Energy Research Institute) Parallel-Passage Dehumidifer, SERI/TR-252-1951. Solar Energy Research Inst., Golden, CO.

Schlepp, D. R.; Barlow, R.; Oct 1981, Preliminary study of the potential for performance improvements in solar desiccant cooling, SERI/PR-252-1416. Solar Energy Research Inst., Golden, CO.

Schlepp, D. R.; Penney, T. R.; August 1988, Five-Year Research Plan for the Solar Desiccant Cooling Program: FY 1984-FY 1988, SERI/PR-252-2061. Solar Energy Research Institute Golden, CO.

Schlepp, D.; Schultz, K.; Oct 1984, Analysis of advanced solar hybrid desiccant cooling systems for buildings, SERI/TR-252-2527. Solar Energy Research Inst., Golden, CO (USA).

Schlepp, D.; Schultz, K.; Zangrando, F.; Aug 1984, Facility design for cyclic testing of advanced solid desiccant dehumidifiers, SERI/TR-252-2464. Solar Energy Research Inst., Golden, CO (USA).

Schlepp, D. R.; Schultz, K. J.; Sep 1984, High performance solar desiccant cooling system: performance evaluations and research recommendations, SERI/TR-252-2497. SERI, Golden, CO (USA).

Schlepp, Dennis R.; 1982, "Investigation of liquid desiccant solar cooling systems," Annual DOE Active Solar Heating and Cooling Contractors' Review Meeting: Proceedings and Project Summaries, Sep 9-11 1981. Washington, DC, USA: DOE, pp. 3. 22, CONF-810912.

Schlepp, Dennis R.; 1982, "National solar desiccant cooling program," Annual DOE Active Solar Heating and Cooling Contractors' Review Meeting: Proceedings and Project Summaries, Sep 9-11 1981. Washington, DC, USA: DOE, pp. 3. 1-3. 2, CONF-810912.

Schmidt, T. A.; Clark, G.; Hayes, J.; Wilson, A.; 1984, "Collector design and operating strategies and system control sensors and setpoints for a solar regenerated desiccant dehumidifier," Proceedings of the Ninth National Passive Solar Conference, Columbus, OH, USA, 23 Sep 1984. Boulder, CO: American Solar Energy Society, pp. 402-407.

Scholten, W. Curran, H.; Jun 1979, "Active cooling update", Sol. Age (USA), Vol. 4, No. 6; pp. 37-41.

Scholten, W. B.; Morehouse, J. H.; 31 Oct 1983, Active Program Research Requirements (APRR). Executive Summary, DOE/SF/11573-T1-Exec.Summ. Science Applications International Corp., McLean, VA (USA).

Schultz, K. J.; 1983, The performance of desiccant dehumidifier air-conditioning systems using cooled dehumidifiers, MS Thesis, Madison, WI: Univ. of Wisconsin - Madison.

Schultz, K. J.; 1987, Rotary solid-desiccant dehumidifiers: analysis of models and experimental investigation, PhD Thesis, Madison, WI: Univ. of Wisconsin.

Schultz, K. J.; Apr 86, SERI(Solar Energy Research Institute) Desiccant Cooling Test Facility. Status Report. Preliminary Data on the Performance of a Rotary Parallel-Passage Silica-Gel Dehumidifier, SERI/TR-252-2718. Solar Energy Research Inst., Golden, CO.

Schultz, K. J.; Barlow, R. S.; Pesaran, A. A.; Kreith, F.; June 1985, Analysis of a Direct Radiation Solar Dehumidification System, SERI/TP-252-2705. Solar Energy Research Institute Golden, CO.

Schultz, K.; Barlow, R.; Pesaran, A.; Kreith, F.; Feb 1987, "An Analysis of a Direct Radiation Solar Dehumidification System", J. Sol. Energy Eng. (United States), Vol. 109, No. 1; pp. 15-21, see also SERI/TP-252-2985.

Schultz, K. J.; Beckman, W. A.; Mitchell, J. W.; Nov 1983, "The performance of desiccant dehumidifier air-conditioning systems using cooled dehumidifiers," ASME winter annual meeting. Am. Soc. Mech. Eng., (Pap.) (USA), Boston, MA, USA, 13 Nov 1983. pp. 7.

Schultz, K. J.; Mitchell, J. W.; 1989, "Comparison of the DESSIM model with a finite difference solution for rotary desiccant dehumidifiers", J. Sol. Energy Eng, Vol. 111, No. 4; pp. 286-91.

Schultz, K. J.; Mitchell, J. W.; 1987, "Experimental analysis of a rotary silica gel dehumidifier," ASME winter meeting. Solar Energy Technology SED-Vol. 4, Boston, MA, USA, 13 Dec 1987. New York, NY: American Society of Mechanical Engineers, pp. 15-22.

Schultz, K. J.; Mitchell, J. W.; 1982, "Performance of solar-desiccant systems using cooled desiccant beds," American section of the International Solar Energy Society conference. Progress in solar energy: the renewable challenge, Houston, TX, USA, 1 Jun 1982. Boulder, CO: American Solar Energy Society, pp. 585-590.

Schwarz, J.; Keller, C.; Soltes, J.; 1991, "Adsorption cycles with the working fluid zeolite/water," ASHRAE Winter Meeting - Technical Papers. ASHRAE Transactions pt 1., New York, NY, USA, 1991 Jan 19-23. Atlanta, GA (USA): ASHRAE, pp. 569-577.

Shankar, S. R.; Gopalakrishnan, N. K.; Oct 1980, Solar passive systems for buildings, NP-2901848. Tata Energy Research Inst., Bombay (India). Documentation Centre.

Sharma, A. D.; Brusewitz, G. H.; Huhnke, R. L.; 1981, "Dehumidification to reduce cold weather swine housing energy demand," American Society of Agricultural Engineers meeting. ASAE Tech. Pap. (United States), Chicago, IL, USA, 15 Dec 1981. pp. 1-27.

Sharma, J. K.; 1984, Reviews of renewable energy resources Volume 2, New York, NY: John Wiley and Sons Inc. pp. 1-147.

Sharma, S. M.; Thirumalai, S.; Murphy, S. S.; Murphy, M. V. K.; 1986, "Analysis of a solar operated liquid desiccant cooling system," Proceedings of condensed papers of the 7th Miami international conference on alternative energy source, Miami Beach, FL, USA, 9 Dec 1985. Coral Gables, FL: Clean Energy Research Institute, pp. 136.

Shastry, D. V.; Jagadish, B. S.; Sharma, G. K.; 1985, "Performance studies on adsorbents for desiccant cooling," 7th Miami international conference on alternative energy sources. Alternative energy sources VII Vol. 2 - Solar Energy 2, Miami Beach, FL, USA, 9 Dec 1985. New York, NY: Hemisphere Publishing, pp. 51-60.

Shaw, L. E.; Mar 1979, "Development of an integrated single family size air based solar heating and domestic water heating system using either a desiccant or a heat pump based cooling system," Proceedings of 3rd annual solar heating and cooling Research and Development Branch contractors' meeting, Washington, DC, USA, 24 Sep 1978. pp. 310-311, CONF-780983.

Shelley, E. F.; Filed date 13 Jun 1977 13 May 1980, Solar air conditioning apparatus and method Patent, U. S. Patent #4,202,179.

Shelpuk, B.; Oct 1978, "Overview of solar cooling systems which utilize adsorption/desorption processes," 3rd workshop on the use of solar energy for the cooling of buildings, San Francisco, CA, USA, 15 Feb 1978. pp. 67-87, CONF-780249.

Shelpuk, B.; Apr 1978, "Proceedings of the desiccant cooling conference of November 16, 1977," Desiccant cooling conference, Golden, CO, USA, 16 Nov 1977. pp. 98, SERI-22 CONF-7711108-(Summ.).

Shelpuk, B.; Hooker, D. W.; 1979, "Overview of development programs in solar desiccant cooling for residential buildings", ASHRAE Trans. (USA), Vol. 85, No. 2; pp. 749-759, see also SERI/TP-34-187.

Shelpuk, B.; Hooker, Douglas W.; 1979, "An Overview of Desiccant Cooling Systems and Their Storage Requirements," Proc. Sol. Energy Storage Options, Intensive Workshop Therm. Energy Storage Sol., pp. 107-23, SERI/TP-34-202, CONF-790328-P1.

Shelpuk, B.; Hooker, D. W.; Jorgensen, G. J.; Bingham, C. E.; Jun 1979, Simulations and economic analyses of desiccant cooling systems, SERI/TR-34-090. Solar Energy Research Inst., Golden, CO.

Shelpuk, B.; Osborne, W.; Tillman, N.; September 1992, Solid Desiccant Heat Pipe Dehumidifier. Final Report, May 1989 - September 1992, GRI-92/0368. Natural Energy Resources Unltd., Golden, CO (USA).
Shelton, S. V.; Filed date 03 May 1985 09 Sep 1986, Solid adsorbent heat pump system, U. S. Patent #4,610,148.

Sheridan, J. C.; Mitchell, J. W.; 1985, "A hybrid solar desiccant cooling system", Solar Energy, Vol. 34, No. 187;

Shih, J. S.; Chuah, Y. K.; Horigome, T.; Kimura, K.; Takakura, T.; Nishino, T.; Fujii, I.; 1990, "Solar desiccant dehumidification and cooling in Taiwan," Clean and Safe Energy Forever. V. 1 - World Congress of the International Solar Energy Society, Kobe (Japan), Sep 4-8, 1989. Oxford (GB) Pergamon Press, pp. 512-516.

Shipman, B. C.; 1936, Air Cooling and Conditioning Apparatus and System, U. S. Patent #2 058 042.

Shtein, A. L.; Shuverov, G. P.; Kuzevanova, A. V.; Shuverov, S. P.; Etrukhin, A. N.; Ryazanova, S. P.; Trondina, G. I.; 1977, "Experience of operating a battery adsorber in a closed air-conditioning system", Coke Chem., USSR (Engl. Transl.) (USA), Vol. 8, pp. 53-55.

Sick, F.; Apr 1987, Analysis of the seasonal performance of hybrid desiccant cooling systems, DOE/SF/15303-1. Wisconsin Univ., Madison (USA). Solar Energy Lab.

Sick, F.; Bushulte, T. K.; Klein, S. A.; Northey, P.; Duffie, J. A.; 1988, "Analysis of the seasonal performance of hybrid liquid desiccant cooling systems," Advances in solar energy technology. V. 1. Proceedings of the biennial congress of the International Solar Energy Society, Hamburg, F.R. Germany, 13-18 Sep 1987. Oxford, GB: Pergamon Press, pp. 1045-1049.

Siebe, D. A.; 1986, Evaluation of Air-Conditioning Systems Utilizing Liquid Absorbents Regenerated by Solar Energy, Ph.D. Thesis, Arizona State University, Tempe, AZ.

Siebe, D. A.; Wood, B. D.; Collier, R. K.; 1986, Open-cycle Absorption Solar Cooling. Part III. Evaluation of Air-Conditioning Systems Utilizing Liquid Absorbents Regenerated by Solar Energy, ERC-R-86020C. Tempe, AZ (USA): Arizona State University.

Siebe, D. A.; Wood, B. D.; 1983, Utilizing Cooling and Heat Pumping Systems using Liquid Desiccants, Report CR 83027. Tempe, AZ: Arizona State University.

Siegel, I.; Filed date 12 Dec 1986 12 Apr 1988, Self cooling and self heating disposable beverage cans, U. S. Patent #4,736,599.

Smith, J. J.; 1990, Feasibility of a Gas Engine Desiccant Hybrid Retrofit, MS Thesis, The University of New South Wales, Kinsington, Australia.

So'Brien, G. C.; Satcunanathan, S.; 1989, "Performance of a novel liquid desiccant dehumidifier/regenerator system", J. Sol. Energy Eng, Vol. 111, No. 4; pp. 345-52.

Sofrata, H.; Nasser, A.; Shibl, A.; Megahed, M.; 1980, "Study of the solar LiBr dual cycle characteristics," 18th AIAA aerospace sciences meeting. AIAA Pap. (USA), Pasadena, CA, USA, 14 Jan 1980.

Solar Engineering Co., Casselberry FL (USA); Solar liquid-desiccant air-conditioning system. Final report, DOE/R4/10096-T1. Solar Engineering Co., Casselberry, FL (USA).

Solar Energy Research Inst., Golden CO (USA); Apr 1989, Solar Buildings Program Summary: Volume 2: Research Summaries, Fiscal Year 1988, DOE/CH/10093-48. Solar Energy Research Inst., Golden, CO.

Solaron Corp., Denver CO (USA); Dec 1977, Prototype solar heating and cooling systems, including potable hot water. Quarterly report, DOE/NASA/CR-150576. Solaron Corp., Denver, CO (USA).

Solaron Corp., Denver CO (USA); Dec 1978, Prototype solar heating and cooling systems including potable hot water. Quarterly reports, November 1976-June 1977, DOE/NASA/CR-150861. Solaron Corp., Denver, CO (USA).

Southern Solar Energy Center, Atlanta GA (USA); 1980, Passive solar cooling competition: design program, SSEC/SP-41106. Southern Solar Energy Center, Atlanta, GA (USA).

Spauschus, H. O.; Sep 1987, "Development in refrigeration: Technical advances and opportunities for the 1990s", XVIIth International Congress of Refrigeration. International Journal of Refrigeration, Vol. 10, No. 5; pp. 263-270.

Staats, W. R.; 1978, "Solar-augmented heating and air-conditioning systems," US commerce trade show, Tehran, Iran, 30 Apr 1978. Chicago, IL: Gas Developments Corp., pp. 10.

Stamper, E.; 1981, "Psychrometrics of adsorbent dehumidification," Industrial energy manager's sourcebook, Lilburn, GA: The Fairmont Press Inc., pp. 42-46.

Stevens, D. I.; 1988, Analysis of Liquid-Desiccant Systems and Component Modeling, MS Thesis, Madison WI: Univ. of Wisconsin-Madison.

Stevens, D. I.; Braun, J. E.; Klein, S. A.; Duffie, J. A.; Coleman, M. J.; 1988, "An Effectiveness Model of heat and Mass Transfer in Liquid-Desiccant Systems," Solar '88: American Solar Energy Society Annual Meeting and 13th National Passive Solar Conference. Solar '88 (Technical Papers), Cambridge, MA, USA, 18 Jun 1988. Boulder, CO: American Solar Energy Society, pp. 114-119.

Stevens, D. I.; Braun, J. E.; Klein, S. A.; 1989, "Effectiveness model of liquid-desiccant system heat/mass exchangers", Solar Energy, Vol. 42, No. 6; pp. 449-455.

Stewart, Julie; Apr 1987, "Super markets for gas cooling", American Gas Association Monthly, Vol. 69, No. 4; pp. 14-17.

Stockhausen, N. J.; Marcelin, G.; May 89, Behavior of Interlayered Water in Open Hydroxide Layered Lattices. Annual Report February 1988-February 1989, GRI-89/0112. Pittsburgh Univ., PA. Dept. of Chemical and Petroleum Engineering.

Strain, H.; Tompkins, L.; Filed date 30 Aug 1977 14 Oct 1980, Desiccant thermal energy storage system for compact heating and cooling Patent, U. S. Patent #4,227,375.

Studak, J. W.; Peterson, J. L.; 1988, "A Preliminary Evaluation of Alternative Liquid Desiccants for a Hybrid Desiccant Air Conditioner," Proceedings of the Fifth Annual Symposium on Improving Building Energy Efficiency in Hot and Humid Climates, Houston, TX, September 13-14, 1988. pp. 155-159.

Suzuki, S.; Priority date 30 Oct 1979, Japan 19 Jun 1984, Dehumidification air-conditioning method with solar heat, U. S. Patent #4,454,727.

Swami, M.; 1990, "Effect of desiccant geometry on the performance of the desiccant enhanced nocturnal radiative cooling system," Proceedings of the 1990 ASME International Computers in Engineering Conference and Exposition. Proc 1990 ASME Int Comput Eng Conf Expo., Boston, MA, USA, Aug 5-9, 1990. Boston, MA (USA): ASCE, Boston Society of Civil Engineers Sect., pp. 425-431.

Swami, M.; Fairey, P.; Kerestecioglu, A.; 1990, "Analytical assessment of the desiccant enhanced radiative cooling concept," Solar Engineering 1990 - Presented at the Twelfth Annual International Solar Energy Conference, Miami, FL, USA, Apr 1-4, 1990. New York, NY (USA): American Society of Mechanical Engineers (ASME), pp. 397-405.

Swami, M.; Rudd, A.; Fairey, P.; 1989, "Development and Experimental Validation of a DESRAD Cooling Model". Thermal performance of the exterior envelopes of Building IV," Proceedings of the ASHRAE/DOE/BTECC/CIBSE Conference, Orlando, FL, December 1989. pp. 68-85.

Swanson, J. L.; Cohen, B. M.; Kosar, D.; 1987, "Desiccant-based gas air conditioning," 14th annual energy technology conference and exposition, Washington, DC, USA, 14 Apr 1987. Rockville, MD: Government Institutes Inc.

Swartman, R. K.; 1975, "Combined solar heating/cooling system," Annual meeting of the International Solar Energy Society, Los Angeles, CA, USA, 28 Jul 1975. Rockville, MD: International Solar Energy Society, pp. 404-405, CONF-750712.

Swartman, R. K.; 1979, Solar energy conversion: an introductory course, New York, NY: Pergamon Press. pp. 393-416.

Tamon, H.; Toel, R.; Apr 1985, "Development of a solar-powered dehumidifier based on the surface diffusion phenomenon", Ind. Eng. Chem. Process Des. Dev. (USA), Vol. 26, No. 2; pp. 454-457.

Tamon, Hajime; Toei, Ryozo; 1985, "Solar-powered dehumidifier based on the surface diffusion phenomenon", Ind. Eng. Chem. Process Des. Dev, Vol. 24, No. 2; pp. 450-454.

Tanaka, S.; Hasegawa, T.; Waki, T.; 1984, "On the integrated solar collector-chiller using the intermittent adsorption cycle," Solar World Congress, Proceedings of the 8th Biennial Congress of the International Solar Energy Society, Aug 14-19, 1983. Oxford, England & New York, NY: Pergamon Press, pp. 651-655.

Tansamrit, Songkiert; 1981, A Honeycomb adsorption machine and its application to space cooling, D.Engr. Thesis, Beaumont, TX: Lamar University.

Tchernev, D. I.; 1 Feb 1977, Exploration of molecular-sieve zeolites for the cooling of buildings with solar energy. Final report 1 Sep 74--31 Aug 75, PB-266055. Massachusetts Inst. of Tech., Lexington (USA). Lincoln Lab.

Tchernev, D. I.; Clinch, J. M.; 1989, "Closed Cycle Zeolite Regenerative Heat Pump," Proceedings of the Eleventh Annual ASME Solar Energy Conference, San Diego, CA, 1989. pp. 347-351.

Tchernev, D. I.; Filed date 26 May 1981 3 Dec 1985, Integrated solar collector, U. S. Patent #4,556,049.

Tchernev, D. I.; Emerson, D. T.; Oct 1986, Closed-cycle desiccant cooling system. Final report, Phases 1 and 2a - May 1984-September 1986, PB-87-184271/XAB. Zeopower Co., Natick, MA (USA).

Tchernev, D. I.; Emerson, D. T.; 1988, "High-Efficiency Regenerative Zeolite Heat Pump", ASHRAE Transactions, Vol. 94, No. 2; pp. 2024-2032.

Teagan, P.; Novosel, D.; 1989, Integrated Gas-Fired Desiccant Dehumidification/Electric AC Cooling System, GRI Contract No. 5086-293-1423. Chicago, IL: Gas Research Institute.

Theisen, J. A.; 1981, "Solar absorbent for solar regenerative air drying cooling systems," 1st international solar cooling and dehumidifying conference, Caracas, Venezuela, 3 Aug 1980. Oxford, England: Pergamon Press Ltd., pp. 181.

Thomas, J.; Vasanth, V.; Watanabe, K.; Nakajima, Y.; 1985, "Testing and evaluation of an open cycle desiccant system," Proceedings of the International symposium on the thermal application of solar energy, Fuji-Hakone, Japan, 8 Apr 1985. Tokyo, Japan: Japan Solar Energy Society, pp. 567-570.

Thongprasert, Manit; 1977, A Solar adsorption cooling system: An analytical and experimental study, PhD Thesis, Texas: Texas Tech University.

Thorpe, G. R.; 1986, "The mathematical modelling of an open-cycle solar-regenerated grain cooler," Proceedings of the conference on agricultural engineering, Adelaide, Australia, 24 Aug 1986. Barton Act, Australia: The Institution of Engineers, pp. 373-380.

Tock, R. W.; Jan 1980, Characterization of supersorbent polymers for dehumidification. Final report, TENRAC/EDF-028. Texas Tech Univ., Lubbock (USA). Dept. of Chemical Engineering.

Turner, N. C.; 1979, Cooling Method and System, U. S. Patent #4 171 620.

Turner, R. H.; Kleiser, J. D.; Chen, R. F.; Domingo, N.; Chen, F.; 1988, "Assessment of thermally activated heat pumps with desiccant cooling," Proceedings of the ASHRAE winter meeting. Volume 94, Part 1, Dallas, TX, USA, 30 Jan 1988. Atlanta, GA: American Society of Heating Refrigeration and Air Cond., pp. 552-562.

Turner, R. H.; Kleiser, J. D.; Chen, R. F.; 1987, "Design factors in desiccant cooling systems," ASME/JSME/ISES solar energy conference. Solar engineering - 1987, Honolulu, HI, USA, 22 Mar 1987. New York, NY: American Society of Mechanical Engineers, pp. 941-946.

Turner, R. H.; Kleiser, J. D.; Chen, R. F.; Chen, F.; 1988, "Evaluation of desiccant assisted thermally activated heat pumps in the U.S. climates," Analysis and Applications of Heat Pumps Presented at the Winter Annual Meeting of the American Society of Mechanical Engineers Advanced Energy Systems Division (Publication), Nov 27-Dec 2 1988. New York, NY, USA: ASME, pp. 65-71.

Turner, R. H.; Kleiser, J. D.; Chen, R. F.; Domingo, N.; Chen, F.; 1987, "Modeling a thermally activated heat pump with desiccant cooling," ASME winter meeting, Boston, MA, USA, 13 Dec 1987. New York, NY: American Society of Mechanical Engineers, pp. 7.

Tykesson, M.; Ashworth, C.; 1991, "Dry air preservation and corrosion prevention using desiccant dehumidification", Nuclear Engineer, Inst. Nucl. Eng., Vol. 32, No. 3; pp. 92-95.

Ucar, M.; LaGraff, J. E.; Drucker, E. E.; Card, W. H.; 1977, "Solar building energy use analysis," Proceedings of the 1977 annual meeting of the American Section of the International Solar Energy Society. Volume 1, Sections 1--13 Solar-assisted water-to-air heat pumps, Orlando, Florida, USA, 6 Jun 1977. Cape Canaveral, FL: American Section of the International Solar Energy Society, pp. 6.1-6.6, CONF-770603--P1.

Ullah, M. R.; 1986, Analysis of a counter flow indirect evaporative cooling and liquid desiccant dehumidification system, PhD Thesis, College Station, TX: Texas A and M Univ.

Ullah, M. R.; Kettleborough, C. F.; Gandhidasan, P.; May 1988, "Effectiveness of Moisture Removal for an Adiabatic Counterflow Packed Tower Absorber Operating With CaCl2-Air Contact System", J. Sol. Energy Eng. (USA), Vol. 110, No. 2; pp. 98-101.

Urban, R.; Mitchell, J. W.; Beckman, W. A.; 1988, "Dehumidification in supermarket systems," EPRI meeting, San Diego, CA, 1988.

USDOE; Nov 1984, Active solar heating and cooling Renewable technologies program summaries, DOE/CE-0105. USDOE Assistant Secretary for Conservation and Renewable Energy, Washington, DC.

USDOE; Sep 1981, "Annual DOE active solar heating and cooling contractors' review meeting," Pre-meeting proceedings and project summaries, Washington, DC, USA, Sep 1981. Washington, DC, USA: DOE, pp. 286, CONF-810912.

Van den Bulck, E.; 1983, Analysis of solid desiccant rotary dehumidifiers, MS Thesis, Madison, WI: Univ. of Wisconsin - Madison.

Van den Bulck, E.; 1987, Convective heat and mass transfer in compact regenerative dehumidifiers, PhD Thesis, Madison, WI: Univ. of Wisconsin.

Van den Bulck, E.; 1991, "Transient heat and mass transfer in laminar flow forced convection in ducts", International Journal of Heat and Mass Transfer, Vol. 34, Apr-May 1991, No. 4-5; pp. 1249-1258.

Van den Bulck, E.; Klein, S. A.; Mitchell, J. W.; 1988, "Second law analysis of solid desiccant rotary dehumidifiers", J. Sol. Energy Eng, Vol. 110, No. 1; pp. 2-9.

Van den Bulck, E.; Klein, S. A.; 1988, "A single blow test method for compact heat and mass transfer exchangers," National Heat Transfer Conference, Houston, TX, 24-27 July 1988. New York, NY: American Society of Mechanical Engineers, Heat Transfer Div., pp. 459-466, HTD v 96.

Van den Bulck, E.; Mitchell, J. W.; Klein, S. A.; 1984, "Design of dehumidifiers for use in desiccant cooling and dehumidification systems," 22nd national heat transfer conference, Niagara Falls, NY, USA, 5 Aug 1984. pp. 9, CONF-840816-25.

Van den Bulck, E.; Mitchell, J. W.; Klein, S. A.; 1986, "The use of dehumidifiers in desiccant cooling and dehumidification systems", J. Heat Transfer, Vol. 108, No. 3; pp. 684-92.

Van den Bulck, E.; Mitchell, J. W.; Klein, S. A.; Aug 1985, "Design theory for rotary heat and mass exchangers - II. effectiveness-number-of-transfer-units method for rotary heat and mass exchangers", International Journal of Heat and Mass Transfer, Vol. 28, No. 8; pp. 1587-1595.

Van den Bulck, E.; Mitchell, J. W.; Klein, S. A.; Aug 1985, "Design theory for rotary heat and mass exchangers -- I, wave analysis of rotary heat and mass exchangers with infinite transfer coefficients", Int. J. Heat Mass Transfer, Vol. 28, No. 8; pp. 1575-1586.

Van den Bulck, E.; Smith, I. E.; 1991, "High-temperature process drying with hybrid desiccant-heat pumps systems Applications and efficiency of heat pump systems," International conference on applications and efficiency of heat pump systems, Munich (Germany), Oct 1-3, 1990. Oxford (GB) Scientific and Technical Information, pp. 127-133.

Van Leersum, J.; Nov 1985, "Effects of adsorbent diffusivities on particulate bed dehumidifier behavior", Journal of Solar Energy Engineering, Transactions of the ASME, Vol. 107, No. 4; pp. 352-355.

Van Leersum, J. G.; Close, D. J.; 1982, Experimental Verification of Open-Cycle Cooling System Component Models, Report to the Solar Energy Laboratory, University of Wisconsin, Madison, WI.

Varlet, J. L. P.; Johnson, B. R.; Vora, J. N.; 24 Mar 1976, Design of a solar energy assisted air conditioning system, ORNL/MIT-229. Massachusetts Inst. of Tech., Oak Ridge, TN (USA). School of Chemical Engineering Practice.

Varma, V.; 1991, "Selecting desiccants for air dryers", Power, Vol. 135, No. 9; pp. 32, 35.

Vasant, V.; Thomas, J.; Hayes, J.; Andrejko, D. A.; 1983, "An integrated approach to building design," 8th National Passive Solar Conference, Santa Fe, NM, USA, 5 Sep 1983. New York, NY: American Solar Energy Society Inc., pp. 721-725.

Verdonschot, J. K. M.; 1983, "Development of a solar energy installation for space heating and cooling based on hygroscopic materials," Solar world congress. Vol. 1, Perth, Australia, 15 Aug 1983. Oxford, England: Pergamon Press, pp. 574-578.

Verdonschot, J. K. M.; 1984, The development of a solar energy installation for space heating and cooling based on hygroscopic materials, Tech. Phys. Serv., TNO-TH Delft 2600 AD, Neth.

Verdonschoot, J. K. M; 1982, Thermal heat storage in hygroscopic materials for air-based solar-heating systems. Final report, EUR-8172-EN. Technisch Physische Dienst TNO-TH, Delft (Netherlands).

Verdonschot, J. K. M.; Palz, W.; 1982, "Thermal heat storage in hygroscopic materials for air-based solar heating systems," EC Contractors' meeting on solar energy applications to dwellings, Athens, Greece, 11 Nov 1981. Dordrecht, Netherlands: D. Reidel Publishing Company, pp. 186-192.

Vieira, R. K.; Clark, G.; Faultersack, J.; Hayes, J.; Andrejko, D. A.; 1983, "Energy savings potential of dehumidified roof pond residences," 8th national passive solar conference. Progress in Passive Solar Energy Systems, Santa Fe, NM, USA, 5 Sep 1983. New York, NY: American Solar Energy Society Inc., pp. 829-834.

Vliet, G. C.; 1978, "State of the art of solar cooling," International solar energy conference and fair, CONF-7804121-(Absts.).

Vogel, P.; Jan-Feb 1985, "Desiccant residential cooling: new systems improve solar economics", Sol. Mag. (USA), pp. 13-16.

W.R. Grace & Co.; 1966, Bulletin No. IC-15-1181. Baltimore, MD: W.R. Grace & Co.

Wang, S. H.; 1984, Analysis of a desiccant aided evaporative cooling system, PhD Thesis, Clemson, SC: Clemson Univ.

Warren, M. L.; Aug 1981, "Overview of systems analysis, market assessment, and controls work," Annual DOE active solar heating and cooling contractor's review meeting, Washington, DC, USA, Sep 1981. pp. 15, LBL-13052 CONF-810912-14.

Warren, M. L.; Wahlig, M. A.; 1988, "Analysis and comparison of active solar desiccant and absorption cooling systems," Solar engineering - 1988. 10th annual American Society of Mechanical Engineers solar energy conference, Denver, CO, USA, 10 Apr 1988. New York, NY: American Society of Mechanical Engineers, pp. 509-516.

Warren, M. L.; Wahlig, M.; Feb 1991, "Analysis and comparison of active solar desiccant and absorption cooling systems. Part 2 Annual simulation results", Journal of Solar Energy Engineering (USA), Vol. 113, No. 1; pp. 31-35.

Warren, M. L.; Wahlig, M.; Ferber, R. R.; 1986, "Performance comparison of absorption and desiccant solar cooling systems," Solar engineering - 1986. ASME Solar Energy Division conference, Anaheim, CA, USA, 14 Apr 1986. New York, NY: American Society of Mechanical Engineers, pp. 270-281.

Warren, Mashuri L.; Wahlig, Michael; 1991, "Analysis and comparison of active solar desiccant and absorption cooling systems: part I - Model description", J. Sol. Energy Eng, Vol. 113, No. 1; pp. 25-30.

Waugaman, D. G.; 1988, "The effects of geometry changes in a parallel plate rotating silica gel dehumidifier on cooling system performance," 10th annual American Society of Mechanical Engineers solar energy conference. Solar engineering - 1988, Denver, CO, USA, 10 Apr 1988. New York, NY: American Society of Mechanical Engineers, pp. 87-94.

Waugaman, D. G.; 1986, Thermodynamic behavior with cost predictions of residential desiccant-cooling systems, PhD Thesis, College Station, TX: Texas A and M Univ.

Waugaman, D. G.; Kettleborough, C. F.; 1987, "Combining direct and indirect-evaporative cooling with a rotating desiccant wheel in residential applications," ASME/JSME/ISES solar energy conference. Solar engineering - 1987, Honolulu, HI, USA, 22 Mar 1987. New York, NY: American Society of Mechanical Engineers, pp. 848-854.

Waugaman, D. G.; Kettleborough, C. F.; 1988, "Functional relationships for predicting rotating desiccant wheel performance in cooling cycles," 10th annual American Society of Mechanical Engineers Solar Energy Conference. Solar Engineering - 1988, Denver, CO, USA, 10 Apr 1988. New York, NY: American Society of Mechanical Engineers, pp. 135-138.

Weijo, R. O.; Nicholls, A. K.; Weakley, S. A.; Eckert, R. L.; Shankle, D. L.; Mar 91, Evaluation of the near-term commercial potential of technologies being developed by the Office of Building Technologies. Volume 2, Survey results, 1536807 DE91009821/XAB PNL-6778-VOL.2. Battelle Pacific Northwest Labs., Richland, WA. 048335000; 9512268. 223.

Weil, S. A.; Rush, W. F.; Wurm, J.; Dufour, R. F.; 24 Oct 1978, Solid adsorption air conditioning apparatus and method Patent, U. S. Patent #4,121,432.

Westinghouse Electric Corp., Baltimore Md (USA); Dec 1974, Solar heating and cooling experiment for a school in Atlanta. Design report, June-September 1974, PB-240611. Westinghouse Electric Corp., Baltimore, Md. (USA).

White, G. M.; Isaacs, G. W.; Nov 1961, "Solar-power cooling for livestock shelters", Agric. Eng. (USA), Vol. 42, No. 11; pp. 612-615.

Wilhelm, W. G.; Jun 1981, Low Cost Solar Energy Collection for Cooling Applications, BNL-51408. Brookhaven National Lab., Upton, NY (USA).

Wilkinson, W. H.; 1990, "Alternative DUBLSORB concepts", ASHRAE Transactions, Vol. 96, No. 1; pp. 1273-1279.

Wilkinson, W. H.; 1991, "Evaporative cooling trade-offs in liquid desiccant systems," ASHRAE Winter Meeting - Technical Papers. ASHRAE Transactions pt 1., New York, NY, USA, Jan 19-23, 1991. Atlanta, GA (USA): ASHRAE, pp. 642-649.

Wilkinson, W. H.; 1988, "Liquid Desiccant Hybrids. Complexity made simple", ASHRE Transactions, Vol. 94, No. 2; pp. 2010-2023.

Wilkinson, W. H.; 1991, "Simplified, high-efficiency DUBLSORB system," ASHRAE Winter Meeting - Technical Papers. ASHRAE Transactions pt 1., New York, NY, USA, Jan 19-23, 1991. Atlanta, GA (USA): ASHRAE, pp. 413-419.

Wilkinson, W. H.; Lanstrom, D. K.; Novosel, D.; 1988, "DUALSORB - A Universal Desiccant Hybrid Approach", ASHRE Transactions, Vol. 94, No. 1; pp. 563-574.

Wisconsin Univ., Madison USA). Solar Energy Lab.; 18 Jul 1980, Component and systems-evaluation study of solar desiccant cooling. Semiannual progress report, DOE/SF/10548-T1. Wisconsin Univ., Madison (USA). Solar Energy Lab.

Wood, B. D.; Breslaver, M.; Buck, G. A.; Siebe, D. A.; 1983, "Performance characteristics of an open-flow liquid desiccant solar collector/regenerator in a hot arid climate," Solar world congress. Vol. 1, Perth, Australia, 15 Aug 1983. Oxford, England: Pergamon Press, pp. 337-342.

Wood, B. D.; Siebe, D. A.; Applebaum, M. A.; Novak, K. S.; Ballew, L. M.; Nov 1983, Performance characteristics of open-flow liquid desiccant solar collector/regenerator for solar cooling applications. Part 2. System simulation and performance measurements. Final report, DOE/SF/11691-T2. Arizona State Univ., Tempe (USA). Coll. of Engineering and Applied Sciences.

Wood, Byard D.; 1982, "Heat and mass transfer characteristics of liquid dessicant open flow collectors," Annual DOE Active Solar Heating and Cooling Contractors' Review Meeting: Proceedings and Project Summaries, Sep 9-11 1981. Washington, DC, USA: DOE, pp. 3. 6, CONF-810912.

Wood, Byard D.; Buck, Gregory A.; Siebe, Donald A.; Breslauer, Mindy; 1984, "Performance characteristics of an open-flow liquid desiccant solar collector/regenerator in a hot arid climate," Sol. World Congr., Proc. Bienn. Congr. Int. Sol. Energy Soc 8th, 1983. Oxford, Eng: Pergamon Press, pp. 337-42.

Worek, W. M.; Lavan, Z.; 1980, "Cross-cooled desiccant dehumidifier for solar powered cooling systems," American section of the International Solar Energy Society conference. Proc. Annu. Meet. - Am. Sect. Int. Sol. Energy Soc. (USA), Phoenix, AZ, USA, 2 Jun 1980. pp. 224-227.

Worek, W. M.; Lavan, Z.; Aug 1982, "Performance of a cross-cooled desiccant dehumidifier prototype", J. Sol. Energy Eng. (USA), Vol. 104, No. 3; pp. 187-196.

Worek, W. M.; Moon, Chung-Ju; 1988, "Desiccant integrated hybrid vapor-compression cooling: performance sensitivity to outdoor conditions", Heat Recov. Syst. CHP (United Kingdom), Vol. 8, No. 6; pp. 489-501.

Worek, W. R.; Moon, C. J.; 1987, "Off-design performance of a hybrid vapor-compression solid desiccant cooling system," American Society of Mechanical Engineers winter meeting, Anaheim, CA, USA, 7 Dec 1986. New York, NY: American Society of Mechanical Engineers, pp. 6.

Worek, W. M.; Zheng, W.; Belding, W. A.; Novosel, D.; Holeman, W. D.; 1991, "Simulation of Advanced Gas-Fired Desiccant Systems", ASHRAE Transactions, Vol. 97, No. 2; pp. 609-614.

Worek, W. M.; Zheng, W.; San, J. Y.; 1991, "Thermodynamic properties of adsorbed water on silica gel: exergy losses in adiabatic sorption processes", J. Thermophys. Heat Transfer, Vol. 5, No. 3; pp. 435-40.

Worek, William Martin; 1980, Experimental performance of a cross-cooled desiccant dehumidifier prototype, PhD Thesis, Chicago, IL: Illinois Institute of Technology.

Worek, William M.; Choudbury, Kumrul; 1982, "Hybrid desiccant vapor compression cooling system," Proceedings of Condensed Papers - 16th Southeastern Seminar on Thermal Sciences, Apr 19-21 1982. Coral Gables, Fla, USA: Univ of Miami, Clean Energy Research Inst, pp. 156-157.

Worek, William M.; Moon, Chung-Ju; Oct 1986, "Simulation of an integrated hybrid desiccant vapor-compression cooling system", Energy (Oxford), Vol. 11, No. 10; pp. 1005-1021.

Wu, H.; Ishida, M.; Wilson, A. T.; Glennie, W.; 1985, "Passive cooling calculation and design guidelines for hot and humid climates," Solar 85 conference proceedings, Raleigh, NC, USA, 15 Oct 1985. Boulder, CO: American Solar Energy Society, pp. 364.

Wurm, J.; Aug 1986, "Review of open-cycle desiccant air-conditioning concepts and systems," International Institute of Refrigeration (IIR) meeting of commission B1,B2,E1,E2: progress in the design and construction of refrigeration systems, West Lafayette, IN, USA, 5 Aug 1986. pp. 12, CONF-8608151-1.

Wurm, J.; 29 Apr 1980, Solid-adsorption air-conditioning apparatus and method, U. S. Patent #4,199,959.

Wurm, J.; Kinast, J. A.; 1986, "Potentials of adsorption air conditioning in humid climates," FRIGAIR '86 international symposium: cooling-its vital role in agriculture, mines, factories, and buildings, Pretoria, South Africa, 14 Apr 1986. pp. 13, CONF-8604132-1.

Wurm, J.; Kinast, J. A.; Rush, W. F. Jr., Zawacki, T.S.; Macriss, R. A.; Oct 1979, Solar-MEC Development Program. Project 61019 Annual Report, September 1, 1977-September 30, 1978, DOE/CS/34495-T1. Institute of Gas Technology, Chicago, IL (USA).

Wurm, J.; Weil, S. A.; Wright, L. R.; Jan 1979, Solar-MEC Development Program. Project 9103 Semiannual Progress Report, September 1, 1977-February 28, 1978, COO-4495-7. Institute of Gas Technology, Chicago, IL (USA).

Yang, K. H.; Tsai, C. D.; Lee, J. H.; 1988, "Waste heat regenerated solid desiccant system for industrial dehumidifying application," Analysis and Applications of Heat Pumps Presented at the Winter Annual Meeting of the American Society of Mechanical Engineers. American Society of Mechanical Engineers, Advanced Energy Systems Division (Publication) v 8, Nov 27-Dec 2 1988. New York, NY, USA: ASME, pp. 73-78.

Yang, Kuan-Hsiung; Wang, Shih-Hong; May 1988, "Analysis of a solar-assisted desiccant evaporative cooling system and its application", Zhongguo Gongchen Xuekan/Journal of the Chinese Institute of Engineers, Transactions of the Chinese Institute of Engineers,Series A, Vol. 11, No. 3; pp. 227-234.

Yellott, J. I.; Apr 1981, "Solar air-conditioning-active, hybrid and passive," Solar Technology Assessment Conference, Orlando, FL, USA, 29 Jan 1981. pp. 59, CONF-810125-4.

Yellott, J. I.; Jul 1976, "Solar energy: a current overview", Heat., Piping Air Cond. (United States), Vol. 48, No. 7; pp. 50-56.

Zangrando, F.; Choudhury, K.; Pesaran, A. A.; May 1986, Experiments on Sorption Properties of Gamma-Manganese Dioxide Under Isothermal Conditions, SERI/TR-252-2775. Solar Energy Research Inst., Golden, CO (USA).

Zhorzhliani, I. I.; Vezirishvili, O. Sh; Khoshtariya, A. G.; Dabruidashvili, Z. Sh; 1978, "Use of thermal water in air conditioning systems with liquid sorbents," All-Union scientific and technical conference on use of the earth's heat for the production of electric power (summaries of reports), Oct 1978. pp. 129-130.

Ziegler, F.; Brandl, F.; Voelkl, J.; Alefeld, G.; 1985, "Cascading two-stage sorption chiller system consisting of a water-zeolite high temperature stage and a water-LiBr low-temperature stage," Proceedings of the Absorption Heat Pumps Congress, Paris, France, 20 Mar 1985. pp. 231-238, EUR-10007 CONF-8503282.

Zografos, A. I.; Petroff, C.; 1991, "Liquid desiccant dehumidifier performance model," ASHRAE Winter Meeting - Technical Papers. ASHRAE Transactions pt 1., New York, NY, USA, Jan 19-23, 1991. Atlanta, GA (USA): ASHRAE, pp. 650-656.

Absorption Cooling Bibliography

Abdullah, K.; Jan 1982, "Solar heat collector-generator for cooling purposes", Reg. J. Energy, Heat Mass Transfer (India), Vol. 4, No. 1; pp. 19-27.

Adegoke, C. O.; Gosney, W. B.; 1991, "Vapour pressure data for (2LiBr plus ZnBr//2)-H//2O solutions", International Journal of Refrigeration, Vol. 14, Jan 1991, No. 1; pp. 39-45.

Adjei-Mensah, K. K.; Nov 17, 1986, Theoretical and experimental investigation of a solar-powered intermittently operating absorption cooling system, D. Ing. Dissertation, Germany, F.R.: Technische Hochschule Aachen Fakultaet fuer Maschinenwesen.

Aho, I.; 1990, Absorption heat pump in heating and cooling systems of buildings, 1546563 DE91752988/XAB VTT/LVIS-20009; ISBN 951-95157-8-X. Valtion Teknillinen Tutkimuskeskus, Espoo (Finland). LVI-tekniikan Lab. 067526002; 9830600.

Aizawa, Michihiko; Ohuchi, Tomihisa; 1990, "Air-cooled double-effect absorption chiller-heater", Hitachi Review, Vol. 39, June 1990, No. 3; pp. 135-140.

Ajakaiye, B. A.; 1982, "Local manufacture of an active solar cooling system in Nigeria," Solar World Forum, Proceedings of the International Solar Energy Society Congress, Oxford, Engl and New York, NY, USA: Pergamon Press, pp. 544-548.

Akerman, J. R.; 1971, Automotive air conditioning systems with absorption refrigeration, SAE Pap 710037 for meeting Jan 11-15 1971.

Al-Karaghouli, A.; Al-Hamdani, N.; Al-Sinan, W.; 1989, "Iraqi solar house cooling season performance evaluation", Solar & Wind Technology, Vol. 6, No. 1; pp. 29-40.

Alkhamis, A. I.; Sherif, S. A.; 1990, "Economics of a solar-assisted heating/cooling system for an aquatic center in a tropical environment", Int. J. Energy Res, Vol. 14, No. 9; pp. 925-32.

Alkhamis, A. I.; Sherif, S. A.; 1990, "Transient simulation of a solar-assisted heating/cooling system for an aquatic center in tropical environment," Solar Engineering 1990 - Presented at the Twelfth Annual International Solar Energy Conference. Sol Eng 1990 Twelfth Annual Int Sol Energ Conf., Miami, FL, USA, Apr 1-4, 1990. New York, NY (USA): American Society of Mechanical Engineers (ASME), pp. 371-377.

Allen, R.; 1973, "Optimization studies of solar powered absorption air conditioning systems," Proceedings of the solar heating and cooling for buildings workshop Part I: Technical sessions, March 21 and 22, Washington, DC, March 21-23 1973. pp. 112-118, PB-223536 CONF-730350-P1.

Allen, R. W.; Morse, F. H.; Sargent, S. L.; 15 May 1974, Optimization studies of solar absorption air-conditioning systems. Semi-annual progress report covering the period August 15, 1973 to February 15, 1974, PB-239490 NSF/RA/N-74-049. Maryland Univ., College Park (USA). Dept. of Mechanical Engineering.

Allen, R. W.; Morse, F. H.; Jan 1976, Optimization studies of solar absorption air conditioning systems. Final progress report, NSF/RANN/SE/GI-39117/PR/76/2. Maryland Univ., College Park (USA). Dept. of Mechanical Engineering.

Allen, R. W.; Morse, F. H.; Egrican, A. N.; 1975, "Thermodynamic and heat transfer analysis of solar absorption air conditioning cycles," Annual Meeting of the International Solar Energy Society. 1975 International Solar Energy Congress and Exposition, Los Angeles, CA, USA, 28 Jul 1975. Rockville, MD: International Solar Energy Society, pp. 394-395, CONF-750712.

Allen, R.; Morse, F. H.; Jul 1976, Thermodynamic and heat transfer analysis of solar powered absorption air conditioning systems, SAN-1122-76/2. Univ. of Maryland, College Park Atlas Corp., Santa Clara, CA (USA).

Alvares, S. G.; Trepp, Ch; 2 Mar 1987, "Simulation of a solar driven aqua-ammonia absorption refrigeration system. Part 2: Viability for milk cooling at remote Brazilian dairy farms", International Journal of Refrigeration, Vol. 10, No. 2; pp. 70-76.

Aly, S. E.; 1989, "Humidity water vapor collection by absorption cooling machines", Desalination, Vol. 73, No. 1-3; pp. 139-65.

Aly, S. E.; Fathalah, K. A.; 1988, "Combined absorption-desiccant solar powered air conditioning system", Waerme-Stoffuebertrag, Vol. 23, No. 2; pp. 111-21.

Amannsberger, K.; Heckel, H.; Kreutmair, J.; Weber, K. H.; Dec 84, Testing and Further Development ofa Solar Absorption Cooling Plant Final rept. Dec 83, BMFT-FB-T-84-264. Maschinenfabrik Augsburg-Nuernberg A.G., Munich (Germany, F.R.).

Ameel, T. A.; 1991, None-absorbable Gas Effects On Heat and Mass Transfer In Falling Film Absorption, Ph.D. Dissertaion, Arizona State University.

Anand, D. K.; Allen, R. W.; Bazques, E. O.; 1976, "Short and long term comparison of solar absorption air-conditioning system performance using real and synthetic weather data," Eleventh intersociety energy conversion engineering conference. Vol. II, State Line, NV, USA, 12 Sep 1976. New York, NY: American Institute of Chemical Engineers, pp. 1354-1361, CONF-760906--P2.

Anand, D. K.; Allen, R. W.; Bazques, E. O.; Sep 1977, Solar powered absorption air-conditioning system performance predictions using stochastic weather models, ORO/4976-77/1. Maryland Univ., College Park (USA). Dept. of Mechanical Engineering.

Anand, D. K.; Allen, R. W.; 1982, "Solar Cooling Studies," Annual DOE Active Solar Heating and Cooling Contractors' Review Meeting: Proceedings and Project Summaries, Sep 9-11 1981. Washington, DC, USA: DOE, Off of Sol Heat Technol, pp. 8. 8-8. 10, CONF-810912.

Anand, D. K.; Allen, R. W.; 1976, "Solar powered absorption air-conditioning system performance using real and synthetic weather data," Sharing the Sun: solar technology in the seventies, Winnipeg, Manitoba, Canada, 15 Aug 1976. Cape Canaveral, FL: American Section of the International Solar Energy Society, pp. 208-227, CONF-760842--P4.

Anand, D. K.; Allen, R. W.; Kumar, B.; 1982, "Transient simulation of absorption machines", J. Sol. Energy Eng, Vol. 104, No. 3; pp. 197-203.

Anand, D. K.; Fischl, R.; 1987, "Dynamic Performance of Absorption Systems for Control Simulation," Solar Engineering - 1987, Proceedings of the ASME-JSME-JSES Solar Energy Conference, 22-27 Mar 1987. New York, NY, USA: ASME, pp. 926-932.

Anand, D. K.; Kennish, W. J.; Lindler, K. W.; Schweitzer, S.; Aug 1984, "Second law analysis of solar powered absorption cooling cycles and systems", J. Sol. Energy Eng. (United States), Vol. 106, No. 3; pp. 291-298.

Anand, D. K.; Lindler, K. W.; Schweitzer, S.; 1984, "Cycle and system irreversibilities of solar powered absorption cooling," Solar Engineering -- 1984 6th annual ASME Solar Energy Division technical conference, Las Vegas, NV, USA, 10 Apr 1984. New York, NY, USA: ASME, pp. 302-307.

Andberg, J. W.; Vliet, G. C.; 1983, "Design guidelines for water-lithium bromide absorbers", ASHRAE Trans. (United States), Vol. 89, No. 1B; pp. 220-232.

Anderson, P.; 1978, "Solar absorption cooling," Symposium on energy from the sun, Chicago, IL, USA, 3 Apr 1978. Chicago, IL: Institute of Gas Technology, pp. 209-222.

Anderson, Philip P.; 1976, "Solar-operated absorption water chiller - a comparison of aqueous bromide and aqua ammonia cycles", ASHRAE Trans, Vol. 82, pp. Pt. 1, 959-65.

Andreasen, S. E.; Hummelshoej, R. M.; Harboe, S.; 1986, "Utilization of solar energy for air-conditioning purposes in Iraq," Solar energy at high latitudes: North Sun '86 - international conference, Copenhagen, Denmark, 10 Jun 1986. pp. 121-126, CONF-860641.

Anon; May 1978, "Bibliography: Solar Cooling Systems", Sol. Eng. Mag. (United States), Vol. 3, No. 5; pp. 41-44.

Anon; Mar 1988, "Combined cooling absorption chillers could make a comback, with the help of micro-chip systems", Heating and Air Conditioning Journal, Vol. 58, No. 669; pp. 28.

Anon; 1973, "Gas-Fired Absorption Summer Air Conditioning Appliances", American National Standards Institute, Standards, No. Z21. 40. 1; pp. 61.

Anon; May 1981, "Solar Applications: Active Solar Cooling Catches on-Slowly but even so Surely", Sol. Eng. Mag. (United States), Vol. 6, No. 5; pp. 28, 30-32.

Aoki, I.; Kitsukawa, Y.; 18 Jun 1974, Absorption-multicomponent cascade refrigeration for multi-level cooling of gas mixtures, U. S. Patent #3,817,046.

Arafa, A. A.; 1987, "A prototype solar heating system for powering an absorption cooling machine," Proceedings of the ASME-JSME-JSES Solar Energy Conf. Solar engineering - 1987, Honolulu, HI, USA, 22 Mar 1987. New York, NY: ASME, pp. 506-511.

Arnas, O. A.; 1976, "Solar-powered dehumidification," Solar cooling and heating: a national forum, Miami Beach, FL, USA, 13 Dec 1976. pp. 269-270, CONF-761220.

Ascher, G.; Oliver, F.; 1983, "Development of a solar energy assisted lithium chloride absorption system for space heating and for space cooling," Sunfest'83: a celebration of the sun - 9th annual conference of the Solar Energy Society of Canada Inc, Windsor, Canada, 1 Aug 1983. Winnipeg, Manitoba, Canada: Solar Energy Society of Canada Inc., pp. HP5.1-HP5.3.

Asha, Iyer P. S.; Srinivasa, Murthy S.; Krishna, Murthy M. V.; 1988, "Double effect vapour absorption systems for solar cooling applications," Advances in solar Energy Technology. Proceedings of the biennial congress of the International Solar Energy Society, Hamburg, F.R. Germany, 13-18 Sep 1987. Oxford, GB: Pergamon Press, pp. 2637-2641.

Auh, P. C.; Sep 1979, Development of hardware simulators for tests of solar cooling/heating subsystems and systems. Phase II. Unsteady state hardware simulation of residential absorption chiller, BNL-51121. Brookhaven National Lab., Upton, NY (USA).

Auh, P. C.; 1978, "Overview on absorption cooling technology in solar applications," 3rd workshop on the use of solar energy for the cooling of buildings, San Francisco, CA, USA, 15 Feb 1978. pp. 6, BNL-24325 CONF-780249-2.

Auh, P. C.; Sep 1978, "Solar cooling R and D overview," 3rd solar heating and cooling R and D branch contractors' meeting, Washington, DC, USA, 24 Sep 1978. pp. 4, BNL-24924 CONF-780983-4.

Auh, P. C.; Jul 1977, Survey of absorption cooling technology in solar applications, BNL-50704. Brookhaven National Lab., Upton, N.Y. (USA).

Ayad, Samir S.; Assassa, Ghazy M.; 1984, "Microcomputer simulation of thermal performance of a solar cooling system", Modeling and Simulation on Microcomputers 1984, pp. 186-190.

Ayyash, S.; 1981, "Assessment of the feasibility of solar absorption and vapor compression cooling systems", Energy Convers. Manage. (United Kingdom), Vol. 21, No. 2; pp. 163-169.

Ayyash, S. A.; Dec 1980, "Power saving in solar absorption cooling systems," 3rd Miami international conference on alternative energy sources. Alternative Energy Sources (United States), Miami Beach, FL, USA, 15 Dec 1980. pp. 247-259.

Ayyash, S.; Maheshwari, G. P.; Salman, M.; Suri, R. K.; 1983, "Performance deterioration of solar absorption cooling systems due to conventional energy input Solar world congress," Solar world congress Vol. 1, Perth, Australia, 15 Aug 1983. Oxford, England: Pergamon Press, pp. 120-124.

Ayyash, S.; Sartawi, M.; Jul 1983, "Economic comparison of solar absorption and photovoltaic-assisted vapour compression cooling systems", Int. J. Energy Res. (United Kingdom), Vol. 7, No. 3; pp. 279-288.

Ayyash, S.; Suri, R. K.; 1984, "Energy balance of solar absorption and vapor compression cooling systems", Int. J. Energy Res. (United Kingdom), Vol. 7, pp. 187-197.

Ayyash, S.; Suri, R. K.; Al-Shami, H.; Alawi, H.; Al-Jassar, A.; Al-Juwayhel, F.; Al-Homoud, A.; 1986, "Investigation of the energy balance of solar absorption cooling systems Solar energy prospect in the Arab world," 2nd Arab international solar energy conference, Bahrain, Bahrain, 15 Feb 1986. Elmsford, NY: Pergamon Press, pp. 64-68.

Ayyash, S.; Suri, R. K.; 1982, "On the parasitic power of solar absorption cooling systems and criteria for operational control", Energy Conversion and Management, Vol. 22, No. 3; pp. 235-241.

Ayyash, S.; Suri, R. K.; Al-Shami, H.; May 1985, "Performance results of solar absorption cooling installation", International Journal of Refrigeration, Vol. 8, No. 3; pp. 177-183.

Ball, D. A.; Hanna, W. T.; Hindin, B.; Landstrom, D. K.; 30 Apr 90, Development of the Dual-Cycle Absorption Heat Pump for Residential Application. Final Report October 1983-April 1990, 1469625 PB90-233982/XAB GRI-90/0075. Battelle Columbus Div., OH. 072617000.

Barkat, Ullah M.; 1982, "Simulation studies of a LiBr-H2O absorption solar cooling system on a laboratory building at Dharhan," Alternative Energy Sources 4 (Proceedings of the 4th Miami International Conference), 14-16 Dec 1981. Ann Arbor, Mich, USA: Ann Arbor Science, pp. 297-318.

Bartlett, J. C.; 1977, "Site-dependent factors affecting the economic feasibility of solar powered absorption cooling," Proceedings of the 1977 annual meeting of the American Section of the International Solar Energy Society. Volume 1, Sections 1--13, Orlando, Florida, USA, 6 Jun 1977. Cape Canaveral, FL: American Section of the International Solar Energy Society, pp. 7.10-7.14, CONF-770603--P1.

Bartlett, J. C.; 1979, "Thermal performance of space cooling solar energy systems in the National Solar Data Network Department of Energy's regional solar updates 1979," Volume one. Federal program presentations and national solar data program, DOE regional solar update conference, Dearborn, MI, USA, 11 Jul 1979. pp. 119-157, CONF-790758-(Vol.1).

Baum, V. A.; Kakabaev, A.; Khandurdyev, A.; Zhuravlenko, V. Y.; Grosman, E. R.; Voloshin, V. T.; Shavrin, V. S.; 1973, "Pilot-plant heliocooling absorption apparatus", Kholod. Tekh. (), Vol. 8, pp. 9-11.

Beard, J. T.; Iachetta, F. A.; 1980, "Computer model for an annual cycle aqua-ammonia absorption cooling system for agricultural storage facilities," Advances in computer technology, ASME century 2 emerging technology conference, San Francisco, CA, USA, 10 Aug 1980. New York, NY: American Society of Mechanical Engineers, pp. 74-84.

Beckman, W. A.; Nov 1977, "Ingenuity and experiment are needed to advance solar cooling", Sunworld (Australia), Vol. 6, pp. 2-6.

Beguin, D.; 1983, Solar Cooling by Absorption Refrigerating Machines Thesis (D. Ing.), FRNC-TH-2157. Perpignan Univ. (France).

Bessler, W.; Shen, C. N.; 1976, "Computer simulation and system optimization of a solar powered absorption cooling process," Solar cooling and heating: a national forum, Miami Beach, FL, USA, 13 Dec 1976. pp. 305-307, CONF-761220.

Bessler, W.; Shen, C. N.; 1975, "Study on parameter variations for solar powered lithium bromide absorption cooling," Tenth intersociety energy conversion engineering conference, Newark, DE, USA, 17 Aug 1975. New York, NY: Inst. of Electrical and Electronics Engineers, Inc., pp. 178-185, CONF-750812.

Best, R.; 1978, "Methanol - lithium--bromide, zinc--bromide - mixture applied to solar absorption heat pumps Solar technology for building. Volume 2. Sessions 5 to 9," International conference on solar building technology, London, UK, 25 Jul 1977. London, England: RIBA Publications Ltd., pp. 437-443.

Best, R.; Eisa, M. A. R.; Holland, F. A.; 1987, "Thermodynamic design data for absorption heat pump systems operating on ammonia-water. Pt.3. Simultaneous cooling and heating", Heat Recov. Syst. CHP (United Kingdom), Vol. 7, No. 2; pp. 187-194.

Best, R.; Hernandez, J.; 1991, "Experimental studies on the operating characteristics of an ammonia-water absorption system for solar cooling", Chem. Eng. Res. Des, Vol. 69, No. A2; pp. 153-60.

Best, R.; Holland, F. A.; 1990, "A study of the operating characteristics of an experimental absorption cooler using ternary systems", Int. J. Energy Res, Vol. 24, No. 5; pp. 553-61.

Best, R.; Porras, L.; Holland, F. A.; 1991, "Thermodynamic design data for absorption heat pump systems operating on ammonia-lithium nitrate: Pt. 1 Cooling", Heat Recovery Systems and CHP (UK), Vol. 11, No. 1; pp. 49-61.

Best, R.; Rivera, W.; Pilatowsky, I.; Holland, F. A.; 1991, "Thermodynamic design data for absorption heat pump systems operating on ammonia-lithium nitrate - part three. Simultaneous cooling and heating", Heat Recovery Syst. CHP, Vol. 11, No. 4; pp. 199-212.

Beyeler, E. P.; Guceri, S. I.; Yuncu, H.; Paykoc, E.; Yener, Y.; 1987, "Performance simulation of a solar absorption air conditioning system using latent heat storage Solar energy utilization," Solar energy utilization, Izmir, Turkey, 23 Jun 1986. Hingham, MA: Martinus Nujhoff Publishing, pp. 435-449.

Biermann, W. J.; Mar 1979, "Development of a single family absorption chiller," Proceedings of 3rd annual solar heating and cooling Research and Development Branch contractors' meeting, Washington, DC, USA, 24 Sep 1978. pp. 276-278, CONF-780983.

Biermann, W. J.; May 1981, Properties of the Carrol system and a machine design for solar-powered, air-cooled, absorption space cooling. Phase I and Phase II. Final report, September 1977-March 1979, DOE/CS/31587-T2. Carrier Corp., Syracuse, NY (USA). Energy Systems Div.

Biermann, W. J.; 1980, "Prototype modular 15 ton solar absorption air conditioning system," Proceedings of the annual DOE active solar heating and cooling contractors' review meeting, Lake Tahoe, NV, USA, 26 Mar 1980. pp. 2.13-2.14, CONF-800340.

Biermann, W. J.; Reimann, R.; Mar 1982, "Air cooled absorption chillers for solar cooling applications," Proceedings of the DOE heat-pump contractors program integration meeting, McLean, VA, USA, 2 Jun 1981. pp. 59-61, CONF-810672.

Biermann, W. J.; Reimann, R. C.; Mar 1982, "Water cooled absorption chillers for solar cooling applications," Proceedings of the DOE heat-pump contractors program integration meeting, McLean, VA, USA, 2 Jun 1981. pp. 62-64, CONF-810672.

Biermann, Wendell J.; 1980, "Development of a single family absorption chiller for use in a solar heating and cooling system," Proc of the Annu DOE Act Sol Heat and Cool Contract Rev Meet, Incline Village, Nevada, USA, Mar 26-28 1980. Washington, DC, USA: DOE, pp. 2. 9-2. 12, CONF-800340.

Bilgen, E.; 1976, "Solar cooling Applications of solar energy," Solar energy seminar, Saskatoon, Saskatchewan, Canada, 26 Mar 1976. Regina, Sasketchewan: Canadian Plains Research Center, pp. 65-84.

Bilgen, E.; 1979, Solar energy conversion: an introductory course, New York, NY: Pergamon Press. pp. 1223-1243.

Bjurstrom, H.; Raldow, W.; Jan-Mar 1981, "Absorption process for heating, cooling and energy storage--an historical survey", Int. J. Energy Res. (United Kingdom), Vol. 5, No. 1; pp. 43-59.

Bjurstroem, H.; Raldow, W.; 1980, Heating Cooling and Storage by Means of the Absorption Process, STU-I-200-1980. Styrelsen foer Teknisk Utveckling, Stockholm (Sweden).

Blinn, J. C.; Mitchell, J. W.; Duffie, J. A.; 1979, "Modeling of transient performance of residential solar air conditioning systems," International Solar Energy Society meeting, Atlanta, GA, USA, 28 May 1979. pp. 5, CONF-790541-61.

Boldrin, B.; 1978, "LiBr absorption cooling devices as heat pumps," 2nd international solar forum, Hamburg, F.R. Germany, 12 Jul 1978. Munich, Germany: Deutsche Gesellschaft fuer Sonnenenergie e.V., pp. 127-136.

Boldrin, B.; Grinzato, E.; Lazzarin, R.; 1979, "Experimental study on the main components of an open solar cooling absorption device," SUN II International Solar Energy Society meeting, Atlanta, GA, USA, 28 May 1979. Elmsford, NY: Pergamon Press Inc., pp. 670.

Bolzan, M.; Lazzarin, R.; 1980, "Comparison between two absorption cooling systems of the ''open'' type under different climate conditions," Volume 2 Symposium on solar energy, Cairo, Egypt, 16 Jun 1978. Elmsford, NY: Pergamon Press, pp. 827-854.

Bolzan, M.; Lazzarin, R.; 1980, "Open cycle absorption cooling devices with spray chamber regenerator and air solar collectors," Progress in Refrigeration Science and Technology, Proceedings of the 15th International Congress of Refrigeration, Sep 23-29 1979. Padova, Italy: Organ and Sci Comm of the 15th Int Congr of Inst of Refrig, pp. 697-704.

Bong, T. Y.; Ng, K. C.; Tay, A. O.; 1987, "Performance study of a solar-powered air-conditioning system", Sol. Energy (United Kingdom), Vol. 39, No. 3; pp. 173-182.

Borde, I.; Jelinek, M.; Yaron, I.; 1978, "Continuous solar-heated absorption cooling unit for industrial applications," 2nd international solar forum, Hamburg, F.R. Germany, 12 Jul 1978. Munich, Germany: Deutsche Gesellschaft fuer Sonnenenergie e.V., pp. 511-521.

Borde, I.; Yaron, I.; Jelinek, M.; 1977, "Performance of absorption cycle operating with low thermal-potential energy sources for direct-contact cooling applications," Proceedings of the 12th intersociety energy conversion engineering conference. Vol. I, Washington, DC, USA, 28 Aug 1977. La Grange Park, IL: American Nuclear Society, Inc., pp. 482-488, CONF-770804--P1.

Bostick, D. A.; Klatt, L. N.; Strain, J. E.; Perez-Blanco, H.; 1985, "Real-time in-situ refractometer for concentration measurements in absorption machines," American Society of Heating, Refrigerating, and Air-Conditioning Engineers symposium on advances in heat activated machines, Portland, OR, USA, 22 Jun 1985. pp. 45, CONF-8506246-1.

Brothers, P. W.; 1984, Design of solar absorption cooling systems, PhD Thesis, Fort Collins, CO, USA: Colorado State Univ.

Brothers, P. W.; 1985, "The design of solar absorption cooling systems," INTERSOL '85 - Proc. of the ninth biennial congress of the ISES, Montreal, Canada, 23 June 1985. Vancouver, BC Canada: Solar Energy Society of Canada, pp. 88.

Brothers, P. W.; Warren, M. L.; Ferber, R. R.; 1986, "Thermal energy storage for solar absorption cooling systems," ASME Solar Energy Division conference. Solar engineering - 1986, Anaheim, CA, USA, 14 Apr 1986. New York, NY: American Society of Mechanical Engineers, pp. 276-281.

Brousse, E.; Claudel, B.; Martine, J. P.; 1983, "Solar operated water-ammonia absorption heat pump for air-conditioning: modeling and simulation", Applied Energy, Vol. 14, No. 2; pp. 131-142.

Brown, R. B.; Nazer, M.; 1980, "Solar refrigeration activities in the Materials Research Institute," Proceedings of the first SOLERAS workshop on solar cooling, Dhahran, Saudi Arabia, 1 Apr 1980. pp. 261-265, MRI/SOL-0601 CONF-8004244.

Bykov, A. V.; Shliuilov, M. Y.; Rosenfeld, L. M.; Talanov, A. V.; 1982, "Application of staged processes in the cycles of lithium - bromide absorption refrigerating machines with the purpose of increasing their efficiency and reducing heat source temperature," Progres dans la Conception et le Fonctionnement des Equipements Frigorifiques et dans les procedes de Traitement par le Froid des Fruits et Legumes (Compte Rendu). Science et Technique du Froid 1982-4, May 26-28 1982. Paris, Fr: Inst Int du Froid, pp. 165-171.

Cairns, E. J.; Wahlig, M. A.; Mar 1988, Applied Science Division annual report: Building Energy Systems Program, FY 1987, LBL-24214. Lawrence Berkeley Lab., CA (USA).

Campos-Velarde, D.; 1983, Modeling and simulation of improved solar absorption cooling systems, PhD Thesis, Madison, WI, USA: Univ. of Wisconsin.

Carrier Corp., Syracuse NY (USA). Energy Systems Div.; 1983, Fabrication, testing, installation, and start-up of a 53 kW solar absorption cooling system, DOE/ET/20643-T4. Carrier Corp., Syracuse, NY (USA). Energy Systems Div.

Charters, W. W. S.; Chen, W. D.; 1979, "Some design aspects of air cooled solar powered LiBr-H/sub 2/O absorption cycle air conditioning systems," SUN II - International Solar Energy Society meeting, Atlanta, GA, USA, 28 May 1979. Elmsford, NY: Pergamon Press Inc., pp. 725-728.

Charters, W. W. S.; Megler, V.; 1974, "Waste heat absorption systems for automotive air conditioning," Thermofluids Conf, Prepr, Melbourne, Aust, Melbourne, Aust, Dec 3-5 1974. Sydney, Aust: Inst of Eng, pp. 62-65.

Cheng, Ching-Shang; Shih, Yeh-Shiang; Nov 1987, "Performance evaluation of the absorption heat pump integrated processes for simultaneous heating and cooling", Journal of the Chinese Institute of Chemical Engineers, Vol. 18, No. 6; pp. 361-367.

Cheremisinoff, P. N.; Regino, T. C.; 1978, Principles and applications of solar energy, Ann Arbor, MI: Ann Arbor Science Publishers, Incorporated. pp. 57-79.

Chingshang, Cheng; Yenshiang, Shih; Mar-Apr 1988, "Exergy and energy analyses of absorption heat pumps", Int. J. Energy Res. (United Kingdom), Vol. 12, No. 2; pp. 189-203.

Chinnappa, J. C. V.; Crees, M. R.; Murthy, M. V. K.; Murthy, S. S.; Stark, K. P.; 1983, "Comparison of simulated solar performance of two cascaded hybrid air-conditioning systems: Vapour absorption vapour compression and vapour jet - vapour compression," Solar World Congress. Vol. 1, Perth, Australia, 15 Aug 1983. Oxford, England: Pergamon Press, pp. 656-660.

Choi, K. H.; Kimura, K.; Horigome, T.; Takakura, T.; Nishino, T.; 1990, "Experiments of a dryness storage tank in a solar heated dehumidifying/drying system of open cycle absorption type," Clean and Safe Energy Forever V.1 World Congress of International Solar Energy Society, Kobe (Japan), Sep 4-8, 1989. Oxford (GB) Pergamon Press, pp. 860-864.

Choi, K. H.; Kimura, K.; Horigome, T.; Kimura, K.; Takakura, T.; Nishino, T.; Fujii, I.; 1990, "Experiments on regenerators in an open cycle solar absorption dehumidifying/drying system Clean and safe energy forever. V. 1," Clean and Safe Energy Forever. V.1 - World Congress of the International Solar Energy Society, Kobe (Japan), Sep 4-8, 1989. Oxford (GB) Pergamon Press, pp. 502-506.

Choi, M. K.; 1983, "Analysis of commercial and residential solar absorption and Rankine cooling systems," 6. annual ASME technical conference on commercial building heating and cooling applications, Orlando, FL, USA, 19 Apr 1983. New York, NY: ASME, pp. 444-451.

Choi, M. K.; Ferber, R. R.; 1986, "Simplified method for evaluating solar absorption and Rankine cooling system performance," ASME Solar Energy Division conference. Solar engineering - 1986, Anaheim, CA, USA, 14 Apr 1986. New York, NY: American Society of Mechanical Engineers, pp. 262-269.

Choi, M. K.; Morehouse, J. H.; 1981, "Thermal and economic assessment of hot side sensible heat and cold side phase change storage combination for absorption solar cooling system," 3rd annual systems simulation, economic analysis/solar heating and cooling operational results conference. Solar engineering-1981, Reno, NV, USA, 27 Apr 1981. New York, NY: American Society of Mechanical Engineers, pp. 439-448.

Christian, J. E.; Aug 1977, Central cooling: absorptive chillers, ANL/CES/TE-77-8. Oak Ridge National Lab., Tenn. (USA).

Chung, R.; Löf, G. O. G.; Duffie, J. A.; Aug 1963, "Experimental study of LiBr--H/sub 2/O absorption air conditioner for solar operation", Mech. Eng. (United States), Vol. 85, No. 8; pp. 31-35.

Cocchi, A.; 1978, "Thermodynamic analysis of a solar heating and cooling system equipped with an absorption refrigerator heat pump operating in winter," 2nd International solar forum, Hamburg, F.R. Germany, 12 Jul 1978. Munich, Germany: Deutsche Gesellschaft fuer Sonnenenergie e.V., pp. 519-526.

Collier, R. K.; 1978, "Analysis of an improved solar-powered cooling system utilizing open-cycle absorbent regeneration," Meeting of the American Section of the International Solar Energy Society, Denver, CO, USA, 28 Aug 1978. pp. 6, LA-UR-78-1663 CONF-780808-10.

Conway, T. M.; Löf, G. O. G.; Oct 1978, "Solar powered residential air conditioning by lithium bromide absorption systems at Colorado State University," 3rd workshop on the use of solar energy for the cooling of buildings, San Francisco, CA, USA, 15 Feb 1978. pp. 39-46, CONF-780249.

Couch, W. A.; San, Martin R. L; 1975, "Continuous absorption air conditioning utilizing solar energy," Annual meeting of the International Solar Energy Society. 1975 International Solar Energy Congress and Exposition, Los Angeles, CA, USA, 28 Jul 1975. Rockville, MD: International Solar Energy Society, pp. 392-393, CONF-750712.

Coy, R. G.; Braden, R. P.; Sep 1980, Solar heating and cooling system installed at Columbus, Ohio. Final report, DOE/NASA/CR-161589 UDR-TR-80-58. Dayton Univ., OH (USA). Research Inst.

Crawford, C. S.; Crehan, D. A.; Fabian, A. C.; Johnstone, R. M.; 1987, "Narrow absorption lines from cooling flows", Mon. Not. R. Astron. Soc, Vol. 224, No. 4; pp. 1007-11.

Curran, H. M.; DeVries, J.; May 1981, Options for thermal energy storage in solar-cooling systems. Final report, DOE/CS/30202-T2 H-C-1007/060-80-976. Hittman Associates, Inc., Columbia, MD (USA).

Curran, H. M.; Heibein, S.; 1979, "Thermal storage for solar Rankine and absorption cooling systems," Solar energy storage options workshop. Proceedings of solar energy storage options. Volume I., San Antonio, TX, USA, 18 Mar 1979. pp. 97-105, CONF-790328-P1.

Dao, K.; Wahlig, M.; Wali, E.; Rasson, J.; Molishever, E.; Mar 1980, "Development of solar driven absorption air conditioners and heat pumps," DOE active solar heating and cooling contractors' review meeting, Lake Tahoe, NV, USA, 26 Mar 1980. pp. 5, LBL-10771 CONF-800340-6.

Dao, K.; Wolgast, R.; Wahlig, M.; Mar 1979, "Development of solar-driven ammonia-water absorption air conditioners and heat-pumps," Proceedings of 3rd annual solar heating and cooling Research and Development Branch contractors' meeting, Washington, DC, USA, 24 Sep 1978. pp. 299-301, CONF-780983.

Darkazalli, G.; Lawley, T. J.; 1981, "Analytical and experimental evaluation of solar absorption and vapor compression residential cooling systems," 2nd Miami international conference on alternative energy sources. Altern. Energy Sources (United States), Miami Beach, FL, USA, 10 Dec 1979. pp. 775-783.

Data Analysis, Inc; 30 Nov 1980, Absorption air conditioning for automobiles. Final report, August 31, 1979-August 31, 1980, DOE/R2/05071-T1. Data Analysis, Inc., Rio Piedras (Puerto Rico).

Davidson, Keith G.; Sep 1987, "Advances in HVAC alternatives", Heating, Piping & Air Conditioning, Vol. 59, No. 9; pp. 59-68.

de Winter, Francis; 1974, "Workshop Proceedings on Solar Cooling for Buildings," Semi-Annual Meeting of the American Society of Heating, Refrigerating and Air Conditioning Engineers (ASHRAE), Los Angeles, California, Feb 6-8 1974. pp. 241.

DeFrees, J. A.; Amberger, R. F.; O'Shea, R.; Nov 87, Feasibility of Using a Waste-Heat-Driven Lithium Bromide Refrigeration System Final rept, NYSERDA-87-25. RIT Research Corp., Rochester, NY.

DeVault, R. C.; 1990, Triple-effect absorption chiller cycle: A step beyond double-effect cycles, 1468143 DE90008910/XAB CONF-900334-3. Oak Ridge National Lab., TN. 021310000; 4832000.

DeVault, R. C.; Marsala, J.; 1990, "Ammonia-water triple-effect absorption cycle," Winter meeting of the American Society of Heating, Refrigerating and Air-Conditioning Engineers, Inc, Atlanta, GA (USA), 11-14 Feb 1990. pp. 22, CONF-900203-2.

DeVault, R. C.; Saito, Takamoto; Igarashi, Yoshio; 1990, "Advanced absorption technology development in the United States Heat pumps: solving energy and environmental challenges," 3rd International Energy Agency heat pump conference, Tokyo (Japan), Mar 12-15, 1990. Oxford (GB) Pergamon Press, pp. 69-80.

26 Feb 90, Development of a Residential Gas-Fired Absorption Double-Effect Air Conditioner/Heater. Phase 1 Final Report, 1469816 PB90-239740/XAB GRI-90/0152.1. Battelle Columbus Div., OH. 072617000.

26 Feb 90, Development of a Residential Gas-Fired Absorption Double-Effect Air Conditioner/Heater. Phase I Final Report. Appendices, 1469680 PB90-235755/XAB GRI-90/0152.2. Battelle Columbus Div., OH. 072617000.

Apr 90, Development of the Dual-Cycle Absorption Heat Pump for Residential Application. Appendix E: U.S.A. Residential Air Conditioning Market Study Final Report, 1517166 PB91-138552/XAB GRI-90/0075.5. Battelle Columbus Labs., OH. 038006000.

Apr 90, Development of the Dual-Cycle Absorption Heat Pump for Residential Application. Appendix A: Reduced Data for Key Tests of the Dual-Cycle Prototype Unit Final Report, 1517162 PB91-138511/XAB GRI-90/0075.1. Battelle Columbus Labs., OH. 038006000.

DeVries, J.; 1980, "Thermal energy storage design criteria," Energy Technology. Proceedings of 7th energy technology conference. Expanding supplies and conservation, Washington, DC, USA, 24 Mar 1980. Washington, DC: Government Institutes, Inc., pp. 1181-1189.

DeVries, J.; 1982, "Thermal energy storage for solar cooling systems," 4th Miami international conference on alternative energy sources, Miami Beach, FL, USA, 14 Dec 1981. Coral Gables, FL: Univ. of Miami, pp. 33-34.

Diamond, S.; Packard, C.; 5 Dec 1976, "New Mexico department of agriculture solar heated and cooled building", Am. Soc. Mech. Eng., (Pap.) (United States), Vol. 76-WA/Sol-10, pp. 1-8.

Dimon, D. F.; Filed date 10 Sep 1979 4 May 1982, Solar air conditioning system Patent, U. S. Patent #4,327,555.

Dressler, W. E.; 1977, "Solar heating and cooling system utilizing evacuated tube collectors and absorption chillers as applied to the Kaw Valley State Bank and Trust Company, Topeka, Kansas," Volume 2. Papers. Solar Heating and Cooling Demonstration Program contractors' review, New Orleans, LA, USA, 5 Dec 1977. pp. 173-176, CONF-771229-P2.

Duff, W. S.; Conway, T. M.; Löf, G. O. G.; Meredith, D. B.; Pratt, R. B.; Mar 1978, Evaluation of high performance evacuated tubular collectors in aresidential heating and cooling system: Colorado State University SolarHouse I. Report for October 1, 1976-September 30, 1977, COO-2577-14. Colorado State Univ., Fort Collins (USA). Solar Energy Applications Lab.

Duff, W. S.; Conway, T. M.; Löf, G. O. G.; Meredith, D. B.; Pratt, R. B.; 1978, "Performance of residential solar heating and cooling system withflat-plate and evacuated tubular collectors: CSU Solar House I," Meeting of the American Section of the International Solar Energy Society, Denver, CO, USA, 28 Aug 1978. pp. 6, COO-2577-16 CONF-780808-24.

Duffie, J. A.; Beckman, W. A.; Mitchell, J. W.; 1980, Solar energy technology handbook. Part B. Applications, systems design, and economics, New York, NY: Marcel Dekker, Inc. pp. 103-117.

Duffie, J. A.; Chung, R.; Löf, G. O. G; Aug 1963, "Study of a solar air conditioner", Mech. Eng, pp. 5p.

Duganov, G. V.; Rozhko, V. F.; Shtompel, A. I.; Timofeevskii, L. S.; Jul 1984, "Use of absorption refrigerating machines in mine air-conditioning systems", Chem. Pet. Eng. (Engl. Transl.) (United States), Vol. 19, No. 5; pp. 522-524.

Dupuy, G.; 1980, Optimization of Adsorbate-Absorbent Couples. Final Report, EUR-6742-FR. Rhone-Poulenc S.A., Paris (France).

Eder, H.; 1976, "Performance of solar driven absorption refrigerator systems," Solar cooling and heating: a national forum, Miami Beach, FL, USA, 13 Dec 1976. pp. 283, CONF-761220.

Egrican, Nilufer; 1988, "The second law analysis of absorption cooling cycles", Heat Recovery Syst. CHP, Vol. 8, No. 6; pp. 549-58.

Eisa, M. A. R.; 1991, "Heat and mass transfer studies on water-lithium bromide absorption heat pump systems", Int. J. Heat Mass Transfer, Vol. 34, No. 3; pp. 891-4.

Eisa, M. A. R.; Devotta, S.; Holland, F. A.; 1985, "A study of economizer performance in a water-lithium bromide absorption cooler", Int. J. Heat Mass Transfer, Vol. 28, No. 12; pp. 2323-9.

Eisa, M. A. R.; Devotta, S.; Holland, F. A.; 1986, "Thermodynamic design data for absorption heat pump systems operating on water-lithium bromide. Pt. 3. Simultaneous cooling and heating", Appl. Energy (United Kingdom), Vol. 25, No. 2; pp. 83-96.

Eisa, M. A. R.; Devotta, S.; Holland, F. A.; 1986, "Thermodynamic design data for absorption heat pump systems operating on water-lithium bromide: Part 1 - Cooling", Appl. Energy (United Kingdom), Vol. 24, No. 4; pp. 287-301.

Eisa, M. A. R.; Diggory, P. J.; Holland, F. A.; Oct-Dec 1986, "Experimental studies to determine the effect of absorber reflux on the performance of a water-lithium-bromide absorption cooler", Int. J. Energy Res. (United Kingdom), Vol. 10, No. 4; pp. 333-341.

Eisa, M. A. R.; Diggory, P. J.; Holland, F. A.; 1987, "Experimental studies to determine the effect of differences in absorber and condenser temperatures on the performance of a water-lithium bromide absorption cooler", Energy Convers. Manage. (United Kingdom), Vol. 27, No. 2; pp. 253-259.

Eisa, M. A. R.; Diggory, P. J.; Holland, F. A.; Jul-Sep 1988, "Study of the operating characteristics of an experimental absorption cooler using water-lithium bromide-ethylene glycol as a ternary working system", Int. J. Energy Res. (United Kingdom), Vol. 12, No. 3; pp. 459-472.

Eisa, M. A. R.; Holland, F. A.; 1986, "A study of the operating parameters in a water-lithium bromide absorption cooler", Int. J. Energy Res, Vol. 10, No. 2; pp. 137-44.

Eisa, M. A. R.; Sane, M. G.; Devotta, S.; Holland, F. A.; 1985, "Experimental studies to determine the optimum flow ratio in a water-lithium bromide absorption cooler for high absorber temperatures", Chem. Eng. Res. Des, Vol. 63, No. 4; pp. 267-70.

Eisenstadt, M. M.; Flanigan, F. M.; Farber, E. A.; 1959, Solar air conditioning with an ammonia-water absorption refrigeration system, Paper 59-A-276. New York: ASME.

Eisser, W.; 1983, Investigation of Solar Heated Absorption-Refrigeration Process for the Air Conditioning of Buildings Diss. (Dr.-Ing.), NP-5770064. Dortmund Univ. (Germany, F.R.). Abt. Chemietechnik.

Elkassabgi, Y.; Perez-Blanco, H.; 1990, Experimental study of the effects of alcohol additives in lithium bromide water pool absorbers, 1536600 DE90016034/XAB CONF-910636-1. Oak Ridge National Lab., TN. 021310000; 4832000.

Ellington, R. T.; Kunst, G.; Peck, R. E.; Reed, J. F.; Aug 1957, Absorption cooling process. A critical literature review. Research bulletin 14, NP-22051. Institute of Gas Technology, Chicago, IL (USA).

Elsayed, M. M.; 1984, "Simulation of a two-stage solar-operated absorption cooling system," Proceedings of the fifth SOLERAS workshop. SOLERAS workshop on solar buildings, Riyadh, Saudi Arabia, 5 May 1984. pp. 585-595, MRI/SOL-1901 CONF-8405149.

Elsayed, M. M.; Taha, I. S.; Darwish, M. A.; 1981, "Computer simulation of solar cooling," 89th annual meeting of the American Institute of Chemical Engineers. AIChE Symp. Ser. (United States), pp. 86-96.

Elsayed, M. M.; Taha, I. S.; Darwish, M. A.; 1984, "Simulation and optimization of design parameters of solar-operated absorption cooling machine," Proceedings of the fifth SOLERAS workshop . SOLERAS workshop on solar buildings, Riyadh, Saudi Arabia, 5 May 1984. pp. 89-120, MRI/SOL-1901 CONF-8405149.

Elshamarka, S.; 1987, "Absorption cooling cycle for potable water supply in solar houses," ISES solar world congress 1987: Advances in solar energy technology. Book of abstracts. Vol. 1, Hamburg, F.R. Germany, 13 Sep 1987. pp. 2.14.11, CONF-870903-Vol.1-Absts.

Elshamarka, S.; 1991, "Absorption heat pump for a potable water supply in a solar house", Applied Energy (United Kingdom), Vol. 40, No. 1; pp. 31-40.

Erickson, D. C.; Traugott, W.; Hewett, R.; Menicucci, D.; Apr 1991, "Isaac trademark solar absorption icemaker SOLTECH 91: Proceedings. Volume 1," Proceedings of SOLTECH '91 conference, Burlingame, CA (USA), Mar 26-29, 1991. pp. 227-249 (312 p).

Esdorn, H.; Brunk, F.; Dec 84, Optimization of the Process Performance of Chillers for Air Conditioning, BMFT-FB-T-84-267. Bundesministerium fuer Forschung und Technologie, Bonn-Bad Godesberg (Germany, F.R.).

Evans, R. D.; Beck, J. K.; 1976, "Alternate working fluids for solar air conditioning applications," Solar cooling and heating: a national forum, Miami Beach, FL, USA, 13 Dec 1976. pp. 363-364, CONF-761220.

Exell, R. H. B.; 1983, Solar energy applications in the tropics, Hingham, MA: D. Reidel Publishing Co. pp. 95-128.

Faghri, A.; Swanson, T. D.; Sep 89, Numerical and Experimental Analysis of a Thin Liquid Film on a Rotating Disk Related to Development of a Spacecraft Absorption Cooling System, 1469107 N90-19523/1/XAB NAS 1.26:183457; NASA-CR-183457. National Aeronautics and Space Administration, Greenbelt, MD. Goddard Space Flight Center. 013129001; NC999967.

Fallek, M.; Bryant, R. C.; McGorray, J. J.; 1983, "Industrial and commercial gas-fired absorption cooling," Managing energy for buildings. Mid-Atlantic energy conference, Baltimore, MD, USA, 7 Dec 1982. Rockville, MD: Government Institutes, Incorporated, pp. 152-170.

Fallek, Mark; 1984, "Heat recovery with absorption cooling", Energy Efficiency in Buildings and Industry, Vol. Publ by Government Inst Inc, Rockville, MD, USA, pp. 498-510.

Fanger, P. O.; 1985, "Performance analysis of a liquid absorbent air-conditioning system utilizing solar energy," World congress on heating, ventilating and air conditioning--international exhibition. CLIMA 2000. Pt. 5. Solar energy - active and passive systems, Copenhagen, Denmark, 25 Aug 1985. Charlottenlund, Denmark: VVS Kongres - VVS Messe, pp. 65-73.

Fanger, P. O.; 1985, "Utilization of solar energy for air-conditioning purposes in Iraq," World congress on heating, ventilating and air conditioning--international exhibition. CLIMA 2000. Pt. 5. Solar energy - active and passive systems, Copenhagen, Denmark, 25 Aug 1985. Charlottenlund, Denmark: VVS Kongres - VVS Messe, pp. 51-56.

Farber, E. A.; Ingley, H. A.; Morrison, C. A.; 1976, "Design, construction and experimental evaluation of solar powered ammonia/water absorption air conditioning at the University of Florida solar house," Energy and the environment, Cincinnati, OH, USA, 5 Oct 1976. Dayton, OH: American Institute of Chemical Engineers, pp. 168-173, CONF-761016.

Farber, E. A.; Morrison, C. A.; Ingley, H. A.; Clark, J. A.; 1976, "Continuous solar air conditioning with ammonia/water absorption cycle," Environmental technology '76. Proceedings of the Institute of Environmental Sciences, Philadelphia, PA, USA, 25 Apr 1976. Mt. Prospect, IL: Institute of Environmental Sciences, pp. 319-321, CONF-760411.

Farber, E. A.; Morrison, C. A.; Ingley, H. A.; 1976, "Experimental evaluation of the University of Florida solar powered ammonia/water absorption air conditioning system," Eleventh intersociety energy conversion engineering conference. Vol. II, State Line, NV, USA, 12 Sep 1976. New York, NY: American Institute of Chemical Engineers, pp. 1349-1353, CONF-760906--P2.

Farber, E. A.; Morrison, C. A.; Ingley, H. A.; 1978, "Experimental evaluation of an intermittent cycle solar-powered ammonia/water absorption air conditioning system," International Solar Energy Congress. Sun: mankind's future source of energy. Volume Three, New Delhi, India, 16 Jan 1978. Elmsford, NY: Pergamon Press Inc., pp. 1561-1566.

Farber, E. A.; Morrison, C. A.; Ingley, H. A.; 31 Jul 1974, Formulation of a data base for the analysis, evaluation and selection of a low temperature solar-powered air conditioning system. Final summary report, PB-238683 NSF/RANN/SE/GI-39323/FR/74/2. Florida Univ., Gainesville (USA). Dept. of Mechanical Engineering.

Farber, E. A.; Morrison, C. A.; Ingley, H. A.; 1974, "Selection and evaluation of the University of Florida's solar powered absorption air conditioning system," American Society of Mechanical Engineers winter annual meeting, New York, NY, 17 Nov 1974. New York, NY: American Society of Mechanical Engineers, pp. 8, 74-WA/Sol-6.

Farber, E. A.; Morrison, C. A.; Ingley, H. A.; 1977, "Theoretical analysis and design: a solar powered ammonia/water absorption air conditioning system," Proceedings of the 1977 annual meeting of the American Section of the International Solar Energy Society. Volume 1, Sections 1--13, Orlando, Florida, USA, 6 Jun 1977. Cape Canaveral, FL: American Section of the International Solar Energy Society, pp. 7.4-7.9, CONF-770603--P1.

Farber, E. A.; Morrison, C. A.; Ingley, H. A.; 1978, "Theoretical basis and design for a residential size solar powered ammonia/water absorption air conditioning system," International Solar Energy Congress. Sun: mankind's future source of energy. Volume Three, New Delhi, India, 16 Jan 1978. Elmsford, NY: Pergamon Press Inc., pp. 1535-1540.

Farwell, W. E.; 1974, "Development and marketing of two-stage absorption water chillers," Proceedings of the third conference on natural gas research and technology, Dallas, TX, USA, 6 Mar 1974. Chicago, IL: Institute of Gas Technology, pp. 9, CONF-740387.

Fathalah, K.; Aly, S. E.; 1991, "Theoretical study of a solar-powered absorption/MED combined system", Energy Convers. Manage, Vol. 31, No. 6; pp. 529-44.

Fazzolari, R.; Choi, H.; 1989, "Solar absorption system analysis with spreadsheet models," Solar engineering - 1989. 11th annual American Society of Mechanical Engineers solar energy conference, San Diego, CA (USA), 2-5 Apr 1989. New York, NY: American Society of Mechanical Engineers, pp. 77-82 544.

Feldman, S. L.; Wirtshafter, R.; Oct 1978, "Effect of solar absorption cooling on the peak loads of electric utilities," Use of solar energy for the cooling of buildings, San Francisco, CA, USA, 15 Feb 1978. pp. 327-333, CONF-780249.

Ferguson, T.; Merrick, R. H.; Mar 1979, Engineering design construction and testing of a salt-water absorption unit optimized for use with a solar collector heat source, COO-2859-25. Arkla Industries, Inc., Evansville, IN (USA).

Feustel, H.; de, Almeida A.; Blumstein, C.; Jan 1991, Alternatives to compressor cooling in California climates, LBL-30041 DE92000707. Lawrence Berkeley Lab., CA (USA) 9513034.

Florida Technological Univ., Cape Canaveral (USA). FL Solar Energy Center; Arizona State Univ., Tempe AZ (USA); Apr 1981, Solar Technology Assessment Project. Volume IV. Solar air conditioning: active, hybrid and passive, DOE/CS/30278-T5. Florida Technological Univ., Cape Canaveral (USA). FL Solar Energy Center; Arizona State Univ., Tempe, AZ (USA).

Froemming, J. M.; Wood, B. D.; Guertin, J. M.; 1979, "Dynamic test results of an absorption chiller for residential solar applications", ASHRAE Trans. (United States), Vol. 85, No. 2; pp. 777-786.

Gadhi, S. M. B.; Agarwal, R. S.; Kaushik, S. C.; 1984, "Thermodynamic properties state equations of pure methanol and methanol-LiBr . ZnBr2 solutions used in vapor absorption refrigeration and air-conditioning cycle," SOLERAS - solar buildings. Proceedings of the fifth SOLERAS workshop on Solar Buildings, Riyadh, Saudi Arabia, 5 May 1984. pp. 731-743, MRI/SOL-1901 CONF-8405149.

Gahin, S.; Ghazi, M. A.; 1982, "Thermodynamic potentialities of vapor compression and absorption solar cooling systems," Progress in solar energy: the renewable challenge. American section of the International Solar Energy Society conference, Houston, TX, USA, 1 Jun 1982. Boulder, CO: American Solar Energy Society, pp. 597-602.

Gandhidasan, P.; Nov 1990, "Reconcentration of aqueous solutions in a packed bed", Journal of Solar Energy Engineering (USA), Vol. 112, No. 4; pp. 268-272.

Garg, H. P.; 1990, "Solar cooling technologies and techniques Proceedings of the workshop on interaction between physics and architecture in environment conscious design," International Centre for Theoretical Physics (ICTP) congress, Trieste (Italy), Sep 11-29, 1989. Rome, Italy ENEA, pp. 213-241.

Gari, H. A.; Aly, S. E.; Fathalah, K. A.; 1990, "Analysis of an integrated absorption/liquid desiccant air conditioning system", Heat Recovery Systems & CHP, Vol. 10, No. 2; pp. 87-98.

George, J.; 1965, Study of liquid ammonia-salts systems and their potential application to the absorption cooling process, Project ZF-72 and ZF-72a. American Gas Association, Inc.

Ghazi, M. A.; Gahin, S.; 1982, "Solar cooling vapor compression versus absorption," American section of the International Solar Energy Society conference. Progress in solar energy: the renewable challenge, Houston, TX, USA, 1 Jun 1982. Boulder, CO: American Solar Energy Society, pp. 609-614.

Gomez, A. L.; Mansoori, G. A.; 1983, "Thermodynamic equation of state approach for the choice of working fluids of absorption cooling cycles", Sol. Energy (United Kingdom), Vol. 31, No. 6; pp. 557-566.

Grallert, H.; Herbricht, M.; Margulies, M.; Sep 1981, Comparison of concepts for solar-heated or solar-driven absorption and compression cooling machines for air conditioning and food preservation purposes, phase 1. Final report, Nov. 1978, BMFT-FB-T-81-165. Messerschmitt-Boelkow-Blohm G.m.b.H., Ottobrunn (Germany, F.R.).

Grosman, E. R.; Jul 1984, "Prospects of using solar energy in providing seasonal cooling", Chem. Pet. Eng. (Engl. Transl.) (United States), Vol. 19, No. 5; pp. 525-528.

Grosman, E. R.; Shavrin, V. S.; Tolstykh, I. P.; Sverdlova, O. A.; 1984, "Absorptional heat converters in solar heating and cooling systems", Applied Solar Energy (English translation of Geliotekhnika), Vol. 20, No. 1; pp. 38-44.

Grossman, G.; Bourne, J. R.; Ben-Dror, J.; Kimchi, Y.; Vardi, I.; 1981, "Improvements in absorption systems for solar air conditioning," Annual conference of the International Solar Energy Society. Proc. Annu. Meet. - Am. Sect. Int. Sol. Energy Soc. (United States), Philadelphia, PA, USA, 26 May 1981. pp. 501-504.

Grossman, G.; Gommed, K.; Gadoth, D.; Jun 1987, "A computer model for simulation of absorption systems in flexible and modular form," Annual meeting of the American Society of Heating, Refrigerating and Air-Conditioning Engineers. ASHRAE Trans. (United States), Nashville, TN, USA, 28 Jun 1987. pp. 2389-2428.

Grossman, G.; Johannsen, A.; 1981, "Solar cooling and air conditioning", Prog. Energy Combust. Sci. (United Kingdom), Vol. 7, No. 3; pp. 185-228.

Grossman, G.; Michelson, E.; 1985, "A modular computer simulation of absorption systems," American Society of Heating, Refrigerating and Air-Conditioning Engineers' semiannual meeting. ASHRAE Trans. (United States), Honolulu, HI, USA, 23 Jun 1985. pp. 1808-1827.

Grossman, G.; Perez-Blanco, H.; Jan 1982, "Conceptual design and performance analysis of absorption heat pumps for waste heat utilization," Semi-annual meeting of the American Society of Heating, Refrigerating, and Air Conditioning Engineers. ASHRAE Trans. (United States), Houston, TX, USA, 24 Jan 1982. pp. 451-466.

Grossman, Gershon; Bourne, Joseph R.; Ben-Dror, Jonathan; Kimchi, Yigal; Vardi, Isaiah; 1981, "Design improvements in lithium bromide absorption chillers for solar applications", J. Sol. Energy Eng, Vol. 103, No. 1; pp. 56-61.

Grossman, Gershon; Childs, Kenneth W.; 1983, "Computer simulation of a lithium bromide-water absorption heat pump fortemperature boosting," ASHRAE 1983 Winter Meeting. ASHRAE Transactions v 89 Pt 1B, Jan 23-26 1983. Atlanta, Ga, USA: Publ by ASHRAE, pp. 240-248.

Grover, G. S.; Eisa, M. A. R.; Holland, F. A.; 1988, "Thermodynamic design data for absorption heat pump systems operating on water-lithium chloride-part one. cooling", Heat Recovery Systems & CHP, Vol. 8, No. 1; pp. 33-41.

Grover, Gursharn S.; Devotta, Sukumar; Holland, F. Antony; 1989, "Performance of an experimental absorption cooler using aqueous lithium chloride and lithium chloride/lithium bromide solutions", Ind. Eng. Chem. Res, Vol. 28, No. 2; pp. 250-3.

Guertin, James M.; Wood, Byard D.; 1980, "Transient effects on the performance of a residential solar absorption chiller," Proc. Annu. Meet. - Am. Sect. Int. Sol. Energy Soc, pp. 186-90.

Habib, H. M.; 1989, Effect of a Nonabsorbable Gas on the Performance of a Falling Film Absorber (Cooling, Heat Transfer), Ph.D. Dissertation, Arizona State University.

Habib, H. M.; Wood, B. D.; Murthy, J. Y.; 1989, "Effect of non-absorbable gas on the performance of a falling film absorber for open-cycle absorption solar cooling system," 11th annual American Society of Mechanical Engineers solar energy conference. Solar engineering - 1989, San Diego, CA (USA), 2-5 Apr 1989. New York, NY: American Society of Mechanical Engineers, pp. 247-256 544.

Hancock, O. G. Jr.; Harrenstien, H. P.; 1976, "Solar cooling of a Florida Welcome Station: a demonstration," Joint conference of the American Section of the International Solar Energy Society and The Solar Energy Society of Canada, Inc. Sharing the Sun: solar technology in the seventies. Volume 3, Winnipeg, Manitoba, Canada, 15 Aug 1976. Cape Canaveral, FL: American Section of the International Solar Energy Society, pp. 190-199, CONF-760842--P3.

Hanna, W. T.; Petty, S. E.; Maret, A. R.; Ball, D. A.; Dicks, J. B.; 1986, "Development of a dual-cycle, gas-fired absorption heat pump for residential application," Energy-sources technology conference and exhibition. Technical economics, synfuels and coal energy - 1986, New Orleans, LA, USA, 23 Feb 1986. New York, NY: American Society of Mechanical Engineers, pp. 137-144.

Hanna, W. T.; Wilkinson, W. H.; Mar 1982, "Compound absorption cooling from low-grade heat using advanced desorbers,", Proceedings of the DOE heat-pump contractors program integration meeting, McLean, VA, USA, 2 Jun 1981. pp. 43-48, CONF-810672.

Harber, H.; Sep 1981, Solar cooling system performance, Frenchman's Reef Hotel, Virgin Islands. Final report, NASA-TM-82442. National Aeronautics and Space Administration, Huntsville, AL (USA). George C. Marshall Space Flight Center.

Harris, A. W.; Shen, C. N.; 1981, "Analysis of solar-powered absorption cycle heat pumps with internal/external energy storages," 2nd Miami international conference on alternative energy sources. Altern. Energy Sources (United States), Miami Beach, FL, USA, 10 Dec 1979. pp. 677-700.

Harris, A. W.; Shen, C. N.; 1977, "Operational dynamics of coupled flat plate solar collector and absorption cycle heat pump system with energy storage Heat transfer in solar energy systems," Winter annual meeting of the American Society of Mechanical Engineers, Atlanta, GA, USA, 27 Nov 1977. New York, NY: American Society of Mechanical Engineers, pp. 103-111.

Harris, Kenneth J.; Aug 1987, "Consider absorption cooling to tap cogeneration waste heat", Power, Vol. 131, No. 8; pp. 47-48.

Hartmann, D. P.; 1978, "Heat pumps and solar cooling," Solar 78 Northwest conference proceedings, Portland, OR, USA, 14 Jul 1978. pp. 68-74, CONF-780754.

Hatami, R.; Eder, H.; 1976, "Solar heated absorption refrigeration system," Solar cooling and heating: a national forum, Miami Beach, FL, USA, 13 Dec 1976. pp. 285-287, CONF-761220.

Hause, R.; 1978, "Design criteria of solar absorption cooling system for food products," International Solar Energy Congress. Sun: mankind's future source of energy. Volume Three, New Delhi, India, 16 Jan 1978. Elmsford, NY: Pergamon Press Inc., pp. 1988-1990.

Hause, R.; 1984, High Performance Solar Collector for Small Cooling Facilities Final rept, EUR-9519-EN. Commission of the European Communities, Luxembourg.

Hedman, P.; Aug 1974, Absorption air conditioning. Technical report, AD-A-022079 TETRAT-A-642-75-130. Midland Coal Co., Trivoli, Ill. (USA).

Hedstrom, J. C.; Balcomb, J. D.; Meckler, G.; 1974, "Comparative analysis of LiBr absorption, dehumidification and solar-Rankine cooling system options for a 66,000 ft/sup 2/ building in Los Alamos, New Mexico," Meeting of the international Solar Energy Society, Fort Collins, CO, USA, 19 Aug 1974. pp. 26, LA-UR-74-1062 CONF-740811-2.

Hedstrom, J. C.; Murray, H. S.; Balcomb, J. D.; Oct 1978, "Initial operation and performance of a Rankine chiller and an absorption chiller in the National Security and Resources Study Center," 3rd workshop on the use of solar energy for the cooling of buildings, San Francisco, CA, USA, 15 Feb 1978. pp. 229-233, CONF-780249.

Heinemann, K. W.; 1978, "Design and construction of a pilot solar space heating and air conditioning system using flat plate collectors and an absorption chiller," International conference on solar building technology. Solar technology for building. Volume 2. Sessions 5 to 9, London, UK, 25 Jul 1977. London, England: RIBA Publications Ltd., pp. 476-485.

Herold, K. E.; Radermacher, R.; Howe, A.; Sep 1991, "Analysis of a hybrid compression-absorption cycle using lithium bromide and water as the working fluid", International Journal of Refrigeration (United Kingdom), Vol. 14, No. 5; pp. 264-272.

Hi, Shao-Li; 1985, "Utilization of the sensible heat from blast-furnace cinders, which supplies the energy for the air-conditioning of a theatre by using a two-stage lithium bromide water refrigerating machine," World congress on heating, ventilating and air conditioning--international exhibition. CLIMA 2000. Pt. 6. Heating, ventilating and air-conditioning systems, Copenhagen, Denmark, 25 Aug 1985. Charlottenlund, Denmark: VVS Kongres - VVS Messe, pp. 343-348.

Himmelman, W. A.; 1980, Solar engineering for domestic buildings, New York, NY: Marcel Dekker, Inc. pp. 138-157.

Holldorff, G.; Priority date 23 Dec 1977, German, Federal Republic of (F.R. Germany) 9 Dec 1980, Method of and apparatus for improving the energy consumption of absorption cooling plants Patent, U. S. Patent #4,237,701.

Hoover, E. C.; Ochs, T.; Bradley, J. O.; 1978, "Dynamic simulation model of LiBr - H2O," Systems simulation and economic analysis for solar heating and cooling, San Diego, CA, USA, 27 Jun 1978. pp. 146-148, SAND-78-1927 CONF-780639.

Hoover, H. C.; May 1986, "Cogenerations: What is your absorber approach", Cogenerat. J. (United States), Vol. 1, No. 3; pp. 69-72.

Huang, B. J.; 1981, "Design limitations of solar refrigeration systems of ammonia-water absorption type for very low temperature application," 1st international solar cooling and dehumidifying conference, Caracas, Venezuela, 3 Aug 1980. Oxford, England: Pergamon Press Ltd., pp. 81.

Huang, W. H.; 1982, "Experimental study on absorption solar cooling systems in Taiwan," ENERGEX '82 - a forum on energy self-reliance: conservation, production and consumption, Regina, Canada, 23 Aug 1982. Winnipeg, Manitoba: Solar Energy Society of Canada, Inc., pp. 358-361.

Iachetta, F. A.; Jun 1976, Report on a philosophy of simulation of complex solar energy systems and other studies for the Science Museum of Virginia, Richmond, Virginia Research experiments planned for the Integrated Solar Energy Heating/Cooling System for the proposed new Physical Science Education Center in Richmond, Virginia, TID-28282.

Iedema, P. D.; Jun 1987, "Real process simulation of a LiBr ZnBr2 CH3OH absorption heat pump," Annual meeting of the American Society of Heating, Refrigerating and Air-Conditioning Engineers. ASHRAE Trans. (United States), Nashville, TN, USA, 28 Jun 1987. pp. 562-574.

Iizuka, H.; Nagamatsuya, K.; Takahashi, K.; Kuroda, J.; Takigawa, T.; Saito, Takamoto; Igarashi, Yoshio; 1990, "New working fluid containing ethylene glycol for air cooled chiller - 2 Heat pumps: solving energy and environmental challenges," 3rd International Energy Agency heat pump conference, Tokyo (Japan), Mar 12-15, 1990. Oxford (GB) Pergamon Press, pp. 565-574.

Infante Ferreira, C. A.; Stolk, A. L.; 1985, "Comparison of falling film and vertical tubular absorbers for absorption heating/cooling systems", Sci. Tech. Froid, No. 3; pp. 149-54.

Ishida, M.; 1985, "Operating results for a solar cooling system using a combined single-double effect absorption chiller," INTERSOL '85 - Solar energy--the diverse solution. Proceedings of the ninth biennial congress of the International Solar Energy Society, Montreal, Canada, 23 Jun 1985. Elmsford, NY: Pergamon Books Inc., pp. 726-730.

Iyer, P. S. A.; Murthy, S. S.; Murthy, M. V. K.; 1991, "Analysis of three-pressure vapour absorption refrigeration systems", Renewable Energy (United Kingdom), Vol. 1, No. 1; pp. 55-58.

Iyer, P. S. A.; Murthy, S. S.; Murthy, M. V. K; 1987, "Double effect vapour absorption systems for solar cooling applications," ISES solar world congress 1987: Advances in solar energy technology. Book of abstracts. Vol. 2, Hamburg, F.R. Germany, 13 Sep 1987. pp. 6.4.17, CONF-870903-Vol.2-Absts.

Jeng, C. Y.; Yo, Y. Y.; Chuah, Y. K.; Chu, P. H.; 1989, "A simple analysis on the performance of absorption heat pump system," Proceedings of the 24th intersociety energy conversion engineering conference. Volume 4 Energy management and renewable resource systems, Arlington, VA (USA), 6-11 Aug 1989. Piscataway, NJ: IEEE Service Center, pp. 2111-2116, 2950.

Jeng, C. Y.; Yo, Y. Y.; Chuah, Y. K.; Chu, P. H.; 1989, "Simple analysis on the performance of absorption heat pump system," Proceedings of the 24th Intersociety Energy Conversion Engineering Conference - IECEC-89. Part 4 (of 6): Energy Management and Renewable Resource Systems. Proceedings of the Intersociety Energy Conversion Engineering Conference v 4., Washington, DC, USA, Aug 6-11, 1989. Piscataway, NJ (USA): IEEE, IEEE Service Center, pp. 2111-2116.

Jianpin, W.; Tianfu, Z.; Zhonghuao, X.; 1984, Heat and mass transfer of falling film absorption of aqueous lithium bromide solutions with small Reynolds numbers, 1477397 DE90011045/XAB ORNL/TR-90/10. Oak Ridge National Lab., TN. 021310000; 4832000.

Jody, B. J.; Daniels, E. J.; Karvelas, D. K.; Dudek, F. J.; 10 May 1991, "Integration of a dessicant cooling system with a stag turbine and an absorption refrigeration cycle to meet the total annual energy requirements of small- and medium-size communities," 82. annual International District Heating and Cooling Association (IDHCA) conference, San Francisco, CA (USA), June 22-26, 1991. ANL/CP-73243 CONF-9106215--2 DE91014468. pp. (16 p).

Johannsen, A.; 1980, Developments in solar-powered air conditioning: state-of-the-art and prospects for South Africa. Paper no. 10, PB-81-246076. Council for Scientific and Industrial Research, Pretoria (South Africa). National Mechanical Engineering Research Inst.

Johnston, A. M.; Watson, C. R.; Szokolay, S. V.; 1983, "Ammonia/water absorption cycles constructed from printed circuit heat exchangers," Solar world congress. Vol. 1, Perth, Australia, 15 Aug 1983. Oxford, England: Pergamon Press, pp. 517-521.

Kakabaev, A.; Golaev, M.; 1971, "Glazed flat surface as a solution regenerator for use in an absorption solar cooling system", Appl. Solar Energy (USSR) (Engl. Transl.) (United States), Vol. 7, No. 4; pp. 80-3.

Kakabaev, A. A.; Klyshchaeva, O.; Khandurdyev, A.; Kurbanov, N.; 1977, "Experience in operating a solar absorption cooling plant with open solution regenerator", Appl. Solar Energy (USSR) (Engl. Transl.) (United States), Vol. 13, No. 4; pp. 57-59.

Kakabaev, A.; Klyshchaeva, O.; Tuiliev, S.; Khandurdev, A.; 1978, "Experimental study of thermotechnical characteristics of glazed solution regenerator", Appl. Solar Energy (USSR) (Engl. Transl.) (United States), Vol. 14, No. 4; pp. 34-36.

Kakabaev, A.; Kurbanov, N.; Klyshchaeva, O.; Redzhepov, G.; 1981, "Storage of cold in an open-cycle solar absorption cooling system", Applied Solar Energy (English translation of Geliotekhnika), Vol. 17, No. 4; pp. 65-67.

Kakabaev, A.; Rakhmanov, A.; 1971, "Absorption solar cooling system with spray chamber: description and test results", Appl. Solar Energy (USSR) (Engl. Transl.) (United States), Vol. 7, No. 4; pp. 77-9.

Karakas, Ahmet; Egrican, Nilufer; Uygur, Seyhan; 1990, "Second-law analysis of solar absorption-cooling cycles using lithium bromide/water and ammonia/water as working fluids", Appl. Energy, Vol. 37, No. 3; pp. 169-87.

Kaushik, S. C.; 1984, "Advanced absorption solar air-conditioning systems: thermal modeling and design aspects," SOLERAS - Solar buildings. Proceedings of the fifth SOLERAS workshop on solar buildings, Riyadh, Saudi Arabia, 5 May 1984. pp. 755-781, MRI/SOL-1901 CONF-8405149.

Kaushik, S. C.; Chandra, S.; 1985, "Computer modeling and parametric study of a double effect generation absorption refrigeration cycle", Energy Convers. Manage. (United Kingdom), Vol. 25, No. 1; pp. 9-14.

Kaushik, S. C.; Chandra, S.; Kaudinya, J. V.; 1985, "Diurnal response of an open roof solar regenerator system for absorption air-conditioning", Energy Convers. Manage. (United Kingdom), Vol. 25, No. 1; pp. 21-27.

Kaushik, S. C.; Chandra, S.; Gadhi, S. M. B.; 1985, "Thermodynamic feasibility of double effect generation absorption system using water-salt and alcohol-salt mixtures as working fluids", J. Heat Recovery Syst, Vol. 5, No. 1; pp. 19-26.

Kaushik, S. C.; Gadhi, S. M. B.; Agarwal, R. S.; Kumari, R.; 1988, "Modeling and simulation studies on single/double-effect absorption cycle using water-multicomponent salt (MCS) mixture", Sol. Energy (United Kingdom), Vol. 40, No. 5; pp. 431-441.

Kaushik, S. C.; Gandi, S. M. B.; Agarwal, R. S.; Chandra, S.; Apr-Jun 1987, "Computer simulation studies of a double effect generation absorption air-conditioning system using water-salt and alcohol-salt mixtures", Int. J. Energy Res. (United Kingdom), Vol. 11, No. 2; pp. 233-243.

Kaushik, S. C.; Kaudinya, J. V.; 1985, "Design and parametric studies on brine still solar regenerator system for open cycle absorption cooling", Reg. J. Energy, Heat Mass Transfer, Vol. 7, No. 1; pp. 23-32.

Kaushik, S. C.; Kaudinya, J. V.; 1989, "Open cycle absorption cooling - a review", Energy Conversion and Management (UK), Vol. 29, No. 2; pp. 89-109.

Kaushik, S. C.; Kumar, Y.; Kaudinya, J. V.; Apr 1991, "Feasibility of an open cycle absorption solar cooling system with solution storage for continuous operation", International Journal of Ambient Energy (United Kingdom), Vol. 12, No. 2; pp. 101-106.

Kaushik, S. C.; Kumar, R.; 1985, "Solar powered two-stage absorption refrigeration and air conditioning with different working fluids," INTERSOL '85 - Solar energy--the diverse solution. Proceedings of Intersol 85, Montreal, Canada, 23 Jun 1985. Ottawa, Ontario: SESCI, pp. 157-158.

Kaushik, S. C.; Kumar, R.; Chandra, S.; Oct-Dec 1985, "Thermal modelling and parametric study of two stage absorption refrigeration and air-conditioning systems", Int. J. Energy Res. (United Kingdom), Vol. 9, No. 4; pp. 391-402.

Kaushik, S.; Kumar, Rajesh; 1985, "Thermodynamic feasibility of an absorber heat recovery cycle for solar airconditioning", Journal of Heat Recovery Systems, Vol. 5, No. 2; pp. 117-126.

Kaushik, S. C.; Rao, S. K.; Kumari, Rajesh; 1991, "Dynamic simulation of an aqua-ammonia absorption cooling system with refrigerant storage", Energy Convers. Manage, Vol. 32, No. 3; pp. 197-206.

Kaushik, S. C.; Yadav, Y. K.; 1991, "Thermodynamic design and assessment of hybrid double absorption solar cooling systems", Heat Recovery Syst. CHP, Vol. 11, No. 4; pp. 255-62.

Kellogg, T.; 15 Apr 1976, "How solar system heats and cools single-family home in Texas", Contractor (United States), Vol. 23, No. 8; pp. 40-41.

Kelly, C. J.; Logee, T. L.; Jan 1982, "A comparison of eight solar-driven absorption cooling systems in the National Solar Data Network," Semi-annual meeting of the American Society of Heating, Refrigerating, and Air Conditioning Engineers. ASHRAE Trans. (United States), Houston, TX, USA, 24 Jan 1982. pp. 1001-1016.

Kilde, N. A.; Madsen, M.; Jan 89, How to Fit Absorption Cooling into the Danish Energy System, RISO-M-2773. Risoe National Lab., Roskilde (Denmark).

Kimura, K.; Tamura, F.; 1983, "Experimental study and energy analysis on open cycle solar absorption system combined with domestic hot water supply," Solar world congress. Vol. 1, Perth, Australia, 15 Aug 1983. Oxford, England: Pergamon Press, pp. 130-134.

Kimura, K.; Tanabe, S.; Momose, T.; Watanabe, K.; Nakajima, Y.; 1985, "Experimental study and energy analysis on the open cycle solar absorption cooling system using LiCl solution," Proceedings of the International symposium on thermal applications of solar energy, Fuji-Hakone, Japan, 8 Apr 1985. Tokyo, Japan: Japan Solar Energy Society, pp. 571-576.

Kirpich, A. S.; Dec 1979, Photovoltaic concentrator application experiment to be located at Sea World Park, Orlando, Florida. Phase I. System Design. Final report, June 1, 1978-February 28, 1979, DOE/CS/05314-1. General Electric Co., Philadelphia, PA (USA). Valley Forge Space Center.

Klee, H.; 1979, "Simulation of the FSEC solar cooling system," SUN II International Solar Energy Society meeting, Atlanta, GA, USA, 28 May 1979. Elmsford, NY: Pergamon Press Inc., pp. 889-893.

Klyshchaeva, O.; Kakabaev, A.; Redzhepov, G.; 1982, "Experimental investigation of the refrigerating-capacity diagram for asolar absorption cooling unit", Applied Solar Energy (English translation of Geliotekhnika), Vol. 18, No. 3; pp. 61-63.

Ko, S. M.; 3 Jun 1980, LiCl dehumidifier/LiBr absorption chiller hybrid air conditioning system with energy recovery, U. S. Patent #4,205,529.

Kochhar G. S.; Reid, R. L.; 1981, "Optimum operating conditions of absorption refrigeration systems for flat plate collector temperatures," 3rd annual systems simulation, economic analysis/solar heating and cooling operational results conference. Solar engineering - 1981, Reno, NV, USA, 27 Apr 1981. New York, NY: American Society of Mechanical Engineers, pp. 260-267.

Kochhar, G. S.; Jul 1984, "Solar absorption refrigeration cooling cost analysis", West Indian J Eng, Vol. 9, No. 2; pp. 59-66.

Kouremenos, D. A.; Rogdakis, E.; Antonopoulos, K. A.; 1989, "High-efficiency, compound NH//3/H//2O-H//2O/LiBr absorption-refrigeration system", Energy (Oxford), Vol. 14, No. 12; pp. 893-905.

Kraft, G.; 1980, "Power economic analysis of the use of absorprion substances for air conditioning in air-conditioning systems," Progress in Refrigeration Science and Technology, Proceedings of the 15th International Congress of Refrigeration, Sep 23-29 1979. Padova, Italy: Publ for Int Inst of Refrig, Paris, Fr, by Organ and Sci Comm of the 15th Int Congr of Refrig, pp. 1139-1144.

Kreider, J. F.; Hoogendoorn, C. J.; Kreith, F.; 1989, Solar Design: Components, Systems, Economics, New York, NY: Hemisphere Publishing Corporation. pp. 254-258.

Kreider, J. F.; Kreith, F.; 1982, Solar Heating and Cooling: Active and Passive Design, Second, New York, NY: McGraw-Hill Book Company. pp. 260-261.

Krizou, Aissa; 1984, Design, construction and performance of a residential solar heating and absorption cooling system, MS Thesis, Tucson, AZ: Univ. of Arizona.

Krusi, P.; Schmid, R.; 1982, "Solar absorption air-conditioning - experiment vs. expectations - what do we do in the future?," Solar World Forum, Proceedings of the International Solar Energy Society Congress, Aug 23-28 1981. Oxford, Engl and New York, NY, USA: Pergamon Press, pp. 549-553.

Kumar, J.; Sriramulu, V.; Jan 1983, "Regeneration of lithium bromide-water and calcium chloride-water solutions using solar energy", Int. J. Ambient Energy (United Kingdom), Vol. 4, No. 1; pp. 27-30.

Kumar, P.; Devotta, S.; Nov 1985, "Analysis of solar absorprion cooling systems with low generator temperatures", International Journal of Refrigeration, Vol. 8, No. 6; pp. 356-359.

Kumar, P.; Devotta, S.; Holland, F. A.; May 1984, "Effect of flow ratio on the performance of an experimental absorptioncooling system", Chemical Engineering Research & Design, Vol. 62, No. 3; pp. 194-196.

Kumar, P.; Devotta, S.; Holland, F. A.; 1985, "Experimental heat and mass transfer studies on the solar generator of an open cycle absorption cooler", Chem. Eng. Res. Des, Vol. 63, No. 3; pp. 139-48.

Kumar, P.; Devotta, S.; 1990, "Study of an absorption refrigeration system for simultaneous cooling and heating," 1990 Annual Meeting of the American Society of Heating, Refrigerating and Air-Conditioning Engineers, Technical and Symposium Papers. ASHRAE Transactions pt 2., St. Louis, MO, USA, Jun 10-13, 1990. Atlanta, GA (USA): ASHRAE, pp. 291-298.

Kumar, P.; Sane, M. G.; Devotta, S.; Holland, F. A.; 1985, "Experimental studies with an absorption system for simultaneous cooling and heating", Chemical Engineering Research & Design v 63 n 2 Mar 1985 p 133-136,

Kumar, Pradeep; Devotta, S.; 1989, "Modeling of the thermal behavior of a solar regenerator for open-cycle cooling systems", Appl. Energy, Vol. 33, No. 4; pp. 287-95.

Kumar, R.; 1988, "Estimation of solar collector area and thermal energy requirement in absorber heat recovery cycle", Heat Recov. Syst. CHP (United Kingdom), Vol. 8, No. 2; pp. 69-73.

Kumm, E. L.; Filed date 22 Dec 1978 23 Sep 1980, Absorption solar powered air conditioning system with storage capacity Patent, U. S. Patent #4,223,535.

Kurosawa, S.; Yoshikawa, M.; Jan 1982, "The highest efficiency gas direct-fired absorption water heater-chiller," Semi-annual meeting of the American Society of Heating, Refrigerating, and Air Conditioning Engineers. ASHRAE Trans. (United States), Houston, TX, USA, 24 Jan 1982. pp. 401-415.

Landauro-Paredes, J. M.; Watson, F. A.; Holland, F. A.; 1983, "Experimental study of the operating characteristics of a water-lithium bromide absorption cooler", Chem. Eng. Res. Des, Vol. 61, No. 6; pp. 362-70.

Lando, J. L.; Vardi, I.; Bourne, J. M.; Kimchi, Y.; 1979, "Solar powered environment control criteria and realization," SUN II International Solar Energy Society meeting, Atlanta, GA, USA, 28 May 1979. Elmsford, NY: Pergamon Press Inc., pp. 720-724.

Langeliers, J.; Chandler, T.; Rockenfeller, U.; Nov 1990, Aqueous absorption fluids. Annual report, July 1989-October 1990, PB-91-159525/XAB. Rocky Research Corp., Boulder City, NV (USA) 9501588.

Langridge, D.; McCormick, P. G.; 1982, "Solar air conditioning using concentrating collectors," Solar World Forum, Proceedings of the International Solar Energy Society Congress, Brighton, Eng., Aug 23-28 1981. Oxford, Eng.: Pergamon Press, pp. 554-561.

Lauck, F.; 1965, "Mathematical model of a house and solar-gas absorption cooling and heating system", ASHRAE J. (United States), Vol. 7, No. 7; pp. 52.

Lawley, T. J.; Aug 1978, Comparison of solar absorption and vapor compression residential cooling systems. Interim report, EPRI-ER-843. Texas Univ., Arlington (USA).

Lawson, M. B.; Lithgow, R. A.; Vliet, G. C.; Jan 1982, "Water-lithium bromide double-effect absorption cooling cycle analysis," Semi-annual meeting of the American Society of Heating, Refrigerating, and Air Conditioning Engineers. ASHRAE Trans. (United States), Houston, TX, USA, 24 Jan 1982. pp. 811-824.

Lazzarin, R.; 1980, "Steady and transient behavior of lithium bromide absorption chillers of low capacity", Int. J. Refrig, Vol. 3, No. 4; pp. 213-18.

Lazzarin, R. M.; Rossetto, L.; 1982, "Performance predictions of solar assisted absorption heat pumps," Solar World Forum, Proceedings of the International Solar Energy Society Congress, Brighton, Eng., Aug 23-28 1981. Oxford, Eng.: Pergamon Press, pp. 380-384.

Leboeuf, C. M.; Löf, G. O. G; 1980, "Open-cycle absorption cooling using packed-bed absorbent reconcentration," American section of the International Solar Energy Society conference. Proc. Annu. Meet. - Am. Sect. Int. Sol. Energy Soc. (United States), Phoenix, AZ, USA, 2 Jun 1980. pp. 205-209.

LeChevalier, R. R.; Oct 1978, "Overview of the national solar cooling," The 3rd workshop on the use of solar energy for the cooling of buildings, San Francisco, CA, USA, 15 Feb 1978. pp. 3-13, CONF-780249.

Lee, L. L.; Dec 88, Advanced Working Fluid Properties in Heat Pump and Absorption Cooling Operations. Annual Report December 1, 1987-November 30, 1988, GRI-89/0032. Oklahoma Univ., Norman. School of Chemical Engineering and Materials Science.

Lei, P. K. K; 1989, Development of solar-driven absorption cycle heat pump grain drying system, Ph.D. Thesis, Clemson University, Clemson, SC (USA).

Lenz, T.; Jul 1985, "Open cycle absorption cooling," Solar buildings conference: realities for today - trends for tommorow. Proceedings, Washington, DC, USA, 18 Mar 1985. pp. 86, CONF-850388.

Lenz, T.; Iyer, R.; Löf, G. O. G.; Wenger, J.; 1983, "Residential cooling with solar heated air and open-cycle lithium chloride absorption chiller," Solar world congress. Proc. Bienn. Congr. Int. Sol. Energy Soc. Vol. 1, Perth, Australia, 15 Aug 1983. Oxford, England: Pergamon Press, pp. 125-129.

Lenz, T. G.; Löf, G. O. G.; Iyer, R.; Wenger, J.; May 1983, Open cycle lithium chloride cooling system. Final report, March 1, 1982-May 28, 1983, DOE/CS/30569-29. Colorado State Univ., Fort Collins (USA). Solar Energy Applications Lab.

Lenz, T.; Löf, G.; Kaushik, V.; Sandell, G.; 1985, "Open-cycle solar absorption cooling," INTERSOL '85 - Solar energy--the diverse solution. Proceedings of the ninth biennial congress of the International Solar Energy Society, Montreal, Canada, 23 Jun 1985. Elmsford, NY: Pergamon Books Inc., pp. 654-658.

Little (Arthur D.), Inc; Jul 77, Phase I Report: Solar Assessment Study in the Support of the International Ekistics Program, ERA citation 04:008494. Little (Arthur D.), Inc., Cambridge, MA.

Löf, G. O. G.; 1980, "Development of solar cooling with air and liquid systems at Colorado State University," SOLERAS - Solar cooling. Proceedings of the first SOLERAS workshop, Dhahran, Saudi Arabia, 1 Apr 1980. pp. 227-244, MRI/SOL-0601 CONF-8004244.

Löf, G. O. G; 1980, "Open cycle lithium chloride solar cooling," Proceedings of the annual DOE active solar heating and cooling contractors' review meeting, Lake Tahoe, NV, USA, 26 Mar 1980. pp. 3.7-3.8, CONF-800340.

Löf, G. O. G.; Duff, W. S.; Conway, T. M.; Mar 1979, "Evaluations of the evacuated tube collector systems on CSU Solar Houses I and III," Proceedings of 3rd annual solar heating and cooling Research and Development Branch contractors' meeting, Washington, DC, USA, 24 Sep 1978. pp. 422-426, CONF-780983.

Löf, G. O. G.; Lenz, T. G.; Rao, S.; Nov 1984, "Coefficients of heat and mass transfer in a packed bed suitable for solar regeneration of aqueous lithium chloride solutions", Journal of Solar Energy Engineering, Transactions of the ASME, Vol. 106, No. 4; pp. 387-392.

Löf, G. O. G.; Lenz, T.; Jul 1985, "Open cycle absorption cooling," Solar buildings conference: realities for today - trends for tomorrow. Proceedings, Washington, DC, USA, 18 Mar 1985. pp. 87-91, CONF-850388.

Löf, G. O. G.; Westhoff, M. A.; Karaki, S.; Feb 1984, Performance evaluation of an active solar cooling system utilizing low cost plastic collectors and an evaporatively-cooled absorption chiller. Final report, DOE/CS/30569-30. Colorado State Univ., Fort Collins (USA). Solar Energy Applications Lab.

Löf, George O. G.; Aug 74, Design and Construction of a Residential Solar Heating and Cooling System Semi-annual progress rept. 1 Jan-31 Jul 74, NSF/RANN/SE/GI-40457/PR/74/2; NSF/RA/N-74-104. Colorado State Univ., Fort Collins. Solar Energy Applications Lab.

Löf, George O. G.; Lenz, Terry G.; Rao, Sham; 1982, "Solar regeneration of lithium chloride solutions in open cycle absorption cooling," ASME Winter Annual Meeting 1982. American Society of Mechanical Engineers (Paper), Phoenix, AZ, USA, Nov 14-19 1982. New York, NY, USA: ASME, pp. 1-6, WA-Sol-6.

Lorsch, H. G.; Jun 1981, "Active solar heating and cooling systems. Part 2", Energy Build. (Switzerland), Vol. 3, No. 2; pp. 137-167.

Lumsdaine, E.; Cherng, J. G.; 1981, Evaluation of solar water heating and solar active cooling in New Mexico. Final report, NP-81903394;END-2-65-2214. New Mexico Energy and Minerals Dept.,Santa Fe, NM.

Machielsen, C. H. M.; Lans, J. C. F.; 1985, "Falling film absorption on a horizontal tube row," World congress on heating, ventilating and air conditioning--international exhibition. CLIMA 2000. Pt. 6. Heating, ventilating and air-conditioning systems, Copenhagen, Denmark, 25 Aug 1985. Charlottenlund, Denmark: VVS Kongres - VVS Messe, pp. 549-555.

Mahmood, Nabeel Abdul-Jabbar; 1970, A Theoretical model for the design of a continuous lithium-bromide - water solar absorption air-conditioning system with energy storage, PhD Thesis, Austin, TX: Univ. of Texas.

Malewski, Werner F.; Holldorff, Guenther M.; 1986, "Power increase of gas turbines by inlet air pre-cooling with absorption refrigeration utilizing exhaust waste heat," International Gas Turbine Conference and Exhibit. American Society of Mechanical Engineers (Paper), Jun 8-12 1986. New York, NY, USA: ASME, pp. 1-4.

Malik, M. A. S.; Coffari, E.; Puri, V. M.; Ahmed, S. F.; 1978, "Performance of a solar heated and cooled home in Kuwaiti environment," International Solar Energy Congress. Sun: mankind's future source of energy. Volume Three, New Delhi, India, 16 Jan 1978. Elmsford, NY: Pergamon Press Inc., pp. 1541-1543.

Manago, A.; Ohuchi, Y.; Nonaka, H.; Itoh, S.; Yamashita, H.; Ohtoshi, S.; 1985, "Development of a gas-fired absorption heat pump," International gas research conference, Washington, DC, USA, 10 Sep 1984. Rockville, MD: Government Institutes, Inc., pp. 940-949.

Mansoori, G. A.; Patel, V.; 1979, "Thermodynamic basis for the choice of working fluids for solar absorption cooling systems", Sol. Energy (United States), Vol. 22, No. 6; pp. 483-491.

Martinez, Anibal R. (Ed.).; 1981, "Solar cooling and dehumidifying," Solar Cooling and Dehumidifying: Proceedings of the 1st International Conference, SOLAR/80, Aug 3-6 1980. Oxford, Eng and New York, NY, USA: Pergamon Press, pp. 1-267.

Martinez, M.; Islas, J.; Best, R.; Horigome, T.; Kimura, K.; Takakura, T.; Nishino, T.; Fujii, I.; 1990, "Exergy analysis of absorption systems for ice production," Clean and Safe Energy Forever. V.1 - World congress of the International Solar Energy Society, Kobe (Japan), Sep 4-8, 1989. Oxford (GB) Pergamon Press, pp. 507-511.

Matsumoto, H.; Szokolay, S. V.; 1983, "An improved absorption chiller-heater for solar cooling," Solar world congress. Vol. 1, Perth, Australia, 15 Aug 1983. Oxford, England: Pergamon Press, pp. 522-526.

Matsumoto, H.; Watanabe, K.; Nakajima, Y.; 1985, "Economic study of a solar heating and cooling system with a combined single and double effect absorption chiller and flat plate high efficiency collector," Proceedings of the international symposium on thermal applications of solar energy, Fuji-Hakone, Japan, 8 Apr 1985. Tokyo, Japan: Japan Solar Energy Society, pp. 443-446.

Matsumoto, K.; Hinotani, K.; Yamano, M.; 1982, "Performance of a solar cooling, heating and domestic hot water supplying system using evacuated tubular heat pipe collectors and an absorption chiller," 4th Miami international conference on alternative energy sources, Miami Beach, FL, USA, 14 Dec 1981. Coral Gables, FL: Univ. of Miami, pp. 14-16.

Maust, Edwin Ellsworth, Jr; 1966, New absorbent-refrigerant combination for air conditioning absorption refrigeration, PhD Thesis, Baltimore, MD: Univ. of Maryland.

McAlindon, J. J.; Saluja, S. N.; Missenden, J.; Nov 77, Design and Development of a Solar Powered Air-Conditioning System. Technical Memorandum No. 46, ERA citation 03:039709. Polytechnic of the South Bank, London (England).

McLaren, R. E.; Rattenbury, P. E.; Upton, K.; 1984, "Remote area application of packaged solar air-conditioning," Solar World Congress, Proceedings of the 8th Biennial Congress of the International Solar Energy Society, Aug 14-19 1983. Oxford, Engl & New York, NY, USA: Pergamon Press, pp. 661-664.

McLinden, M. O.; Klein, S. A.; 1982, "Simulation of an absorption heat pump solar heating and cooling system," Progress in solar energy: the renewable challenge. American section of the International Solar Energy Society conference, Houston, TX, USA, 1 Jun 1982. Boulder, CO: American Solar Energy Society, pp. 501-506.

McLinden, M. O.; Klein, S. A.; 1983, "Simulation of an absorption heat pump solar heating and cooling system", Sol. Energy, Vol. 31, No. 5; pp. 473-82.

Mehta, G. D.; 1981, "Improved solar cooling system," Solar Cooling and Dehumidifying: Proceedings of the 1st International Conference, SOLAR/80, Aug 3-6 1980. Oxford, Eng and New York, NY, USA: Pergamon Press, pp. 51.

Mei, V. C.; Chen, F. C.; Sullivan, R. A.; 1991, Analysis of non-CFC automotive air conditioning, CONF-911256-1 DE92000738. Oak Ridge National Lab., TN (United States) 4832000.

Merriam, Richard; Apr 77, Solar Air - Conditioning Study Final rept, ADL-C-79679; CEL-CR-77.018. Little (Arthur D) Inc Cambridge Mass.

Merrick, R. H.; Jan 1982, "A direct, evaporatively cooled, three-ton lithium bromide-water absorption chiller for solar application," Semi-annual meeting of the American Society of Heating, Refrigerating, and Air Conditioning Engineers. ASHRAE Trans. (United States), Houston, TX, USA, 24 Jan 1982. pp. 797-810.

Merrick, R. H.; Mar 1979, "Engineering design construction and testing of a salt-water absorption unit optimized for use with a solar collector heat source," Proceedings of 3rd annual solar heating and cooling Research and Development Branch contractors' meeting, Washington, DC, USA, 24 Sep 1978. pp. 274-275, CONF-780983.

Merrick, R. H.; 1980, "Refrigerants for absorption systems," SOLERAS - Solar cooling. Proceedings of the first SOLERAS workshop on solar cooling, Dhahran, Saudi Arabia, 1 Apr 1980. pp. 19-32, MRI/SOL-0601 CONF-8004244.

Merrick, R. H.; Anderson, P. P.; Nov 1973, Design, evaluation, and recommendation effort relating to the modification of a residential 3-ton absorption cycle cooling unit for operation with solar energy, N-74-28536 NASA-CR-120277. Arkla Industries, Inc., Evansville, Ind. (USA). Engineering Dept.

Merrick, R. H.; Murray, J. G.; 1980, "Active solar absorption cooling," Solar cooling applications workshop, Phoenix, AZ, USA, 2 Jun 1980. pp. 41-44, PUB-355 CONF-800604-P1.

Merrick, Richard H.; 1982, "Unitary solar heating/cooling system package development," Annual DOE Active Solar Heating and Cooling Contractors' Review Meeting: Proceedings and Project Summaries, Sep 9-11 1981. Washington, DC, USA: DOE, pp. 2. 8-2. 10, CONF-810912.

Miao, D.; Aug 78, Simulation Model of a Single-Stage Lithium Bromide-Water Absorption Cooling Unit, NASA-TP-1296; E-9547. National Aeronautics and Space Administration. Lewis Research Center, Cleveland, Ohio.

Michel, J. W.; Perez-Blanco, H.; 1985, "Influence of a surfactant additive on absorption heat pump performance," American Society of Heating, Refrigerating and Air-Conditioning Engineers' semiannual meeting. ASHRAE Trans. (United States) Volume 91 Part 2B, Honolulu, HI, USA, 23 Jun 1985. pp. 1847-1858.

Midwest Research Inst., Kansas City, MO (USA); 1982, SOLERAS - Solar Cooling Engineering Field Tests Project: Arizona State University. Prototype carrier 10 ton air-cooled solar absorption chiller. Final evaluation report, MRI/SOL-0206. Midwest Research Inst., Kansas City, MO (USA).

Midwest Research Inst., Kansas City, MO (USA); 1985, SOLERAS - Solar Cooling Engineering Field Tests Project: Carrier Corporation. Fabrication, testing and installation report: 53 kW solar absorption cooling system, MRI/SOL-0201. Midwest Research Inst., Kansas City, MO (USA).

Miller, D. K.; 1976, "Performance of water-cooled lithium bromide absorption units for solar energy applications", Heat., Piping Air Cond. (United States), Vol. 48, No. 1; pp. 45-51.

Ming, An-Jin; 1991, "Optimization of ammonia absorption refrigeration process. Effects of seasonal ambient temperature fluctuations", International Journal of Refrigeration, Vol. 14, Nov 1991, No. 6; pp. 341-344.

Mohanty, B.; Bugarel, R.; Miguel, J. F.; Prevost, M.; 1985, "Partial or over loading of an absorption cycle: sensitivity study of parameters in heating and cooling modes", J. Heat Recovery Syst. (United Kingdom), Vol. 5, No. 4; pp. 341-352.

Morehouse, Jeffrey; 1982, "Analysis of solar absorption and Rankine cooling systems," Annual DOE Active Solar Heating and Cooling Contractors' Review Meeting: Proceedings and Project Summaries, Sep 9-11 1981. Washington, DC, USA: DOE, pp. 12. 19, CONF-810912.

Morrissey, A. J.; O'Donnell, J. P.; Steemers, T. C.; 1984, "The use of endothermic refrigerant/absorbent systems in absorption heat pumps," Solar energy applications to dwellings. Proceedings of the EC contractors' meeting on solar energy applications to dwellings, Brussels, Belgium, 1 Jun 1983. Dordrecht, Netherlands: D. Reidel Publishing Company, pp. 339-349.

Morse, F. H.; Allen, R. W.; Anand, D. K.; Bazques, E.; 1975, "Thermal performance predictions of a solar absorption air conditioning system," Annual meeting of the International Solar Energy Congress and Exposition, Los Angeles, CA, USA, 28 Jul 1975. Rockville, MD: International Solar Energy Society, pp. 390-391, CONF-750712.

Mostafa, Hamdi A.; 1981, "Solar air conditioning for hot arid regions", Int. J. Energy Syst, Vol. 1, No. 3; pp. 281-5.

Mumma, S. A.; Sepsy, C. F.; 1976, "Solar absorption air conditioning performance in central Ohio," Proceedings of the ASHRAE semiannual meeting. ASHRAE Trans. (United States) Volume 82, Dallas, TX, USA, 1 Feb 1976. pp. 825-834.

Muneer, T.; Uppal, A. H.; 1985, "Modelling and simulation of a solar absorption cooling system", Applied Energy, Vol. 19, No. 3; pp. 209-229.

Munje, Satish Raghunath; 1982, Analysis of a solar heat pipe heating and absorption cooling system, PhD Thesis, Albuquerque, NM: Univ. of New Mexico.

Muntasser, M. A.; El-Abedi, A.; 1987, "Solar operated absorption air-conditioning system for arid zones in Libya," International Solar Energy Society international congress on solar energy. ISES solar world congress 1987: Advances in solar energy technology. Book of abstracts. Vol. 1, Hamburg, F.R. Germany, 13 Sep 1987. pp. 2.8.12, CONF-870903-Vol.1-Absts.

Nagaoka, Y.; Kurosawa, S.; Nishiyama, N.; Saito, Takamoto; Igarashi, Yoshio; 1990, "Research on an air-source gas absorption heat pump air conditioner Heat pumps: solving energy and environmental challenges," 3rd International Energy Agency heat pump conference, Tokyo (Japan), Mar 12-15, 1990. Oxford (GB) Pergamon Press, pp. 81-91.

Namkoong, D.; 1976, Measured Performance of a 3 Ton LiBr Absorption Water Chiller and Its Effect on Cooling System Operation, NASA-TM-X-73496; E-8894. National Aeronautics and Space Administration. Lewis Research Center, Cleveland, Ohio.

Nash, J. M.; Harstad, A. J.; Nov 76, Application of Solar Energy to Air Conditioning Systems, DOE/NASA/CR-150532. IBM Federal Systems Div., Huntsville, AL.

Nathanson, D.; Burke, J. C.; Feldman, S. J.; O'Farrell, P. M.; Feb 1979, System definition study: Solar Heating and Cooling Commercial Project. Interim report, EPRI-ER-993. Little (Arthur D.), Inc., Cambridge, MA (USA).

Neal, W. E. J.; Pabon-Diaz, M.; Apr 1978, "Solar energy for refrigeration and air conditioning", Refrig. Air Cond. (United Kingdom), Vol. 81, No. 961; pp. 59-76.

Nelson, D. J.; Wood, B. D.; Collier, R. K.; May 1986, Open-cycle absorption solar cooling. Part II. Heat and mass transfer analysis for glazed collector/regeneration. Final report, ERC-R-86020B. Arizona State Univ., Tempe (USA). Solar Energy Lab.; Enerscope, Inc., Glendale, AZ (USA).

Newton, A. B.; 1977, Applications of solar energy for heating and cooling of buildings, ASHRAE/GRP-170. American Society of Heating Refrigerating and Air Conditioning Engineers. New York: American Society of Heating Refrigerating and Air Conditioning Engineers.

Newton, A. B.; Nov 1976, "Optimizing solar cooling systems", ASHRAE J. (United States), Vol. 18, No. 11; pp. 26-31.

Newton, A.; 1981, Solar energy handbook, New York, NY: McGraw-Hill, Inc. pp. 15.1-15.44.

O'Neill, B. K.; Roach, J. R.; 1990, "Organic-fluid absorption-cooling systems. An assessment of the theoretical performance limits," Eighteenth Australasian Chemical Engineering Conference Part 1 (of 2). CHEMECA '90, Australasian Chemical Engineering Conference., Auckland, NZ, Aug 27-30, 1990. Auckland, NZ: University of Auckland School of Engineering, pp. 330-337.

Occhionero, A. J.; Hughes, P. J.; Reid, E. A.; 1991, "Absorption chillers: Part of the solution," International chlorofluorocarbon (CFC) and halon alternatives conference, Baltimore, MD (USA), Dec 3-5, 1991. CONF-911256-2 DE92002331. pp. 10.

Offenhartz, P. O'D; Mar 1979, "Design of a solar air conditioner using a solid phase absorber," Proceedings of 3rd annual solar heating and cooling Research and Development Branch contractors' meeting, Washington, DC, USA, 24 Sep 1978. pp. 281-282, CONF-780983.

Offenhartz, P. O'D; Oct 1978, "Development of solid-phase absorption air conditioner with built-in storage," 3rd workshop on the use of solar energy for the cooling of buildings, San Francisco, CA, USA, 15 Feb 1978. pp. 35-37, CONF-780249.

Ohuchi, T.; Kunugi, Y.; Aizawa, M.; Sugimoto, S.; Kurosawa, S.; Kannoh, S.; Takemoto, S.; Saito, Takamoto; Igarashi, Yoshio; 1990, "Development of an air cooled double effect absorption chiller heater Heat pumps: solving energy and environmental challenges," 3. International Energy Agency heat pump conference, Tokyo (Japan), Mar 12-15, 1990. Oxford (GB) Pergamon Press, pp. 555-564.

Ohuchi, Y.; 1985, "Development of a gas-fired absorption heat pump," American Society of Heating, Refrigerating and Air-Conditioning Engineers' semiannual meeting. ASHRAE Trans. (United States) Volume 91 Part 2A, Honolulu, HI, USA, 23 Jun 1985. pp. 292-303.

Olsen, T. G.; 1976, Desiccant systems potential for cooling in humid climates, U. S. Patent #13 Dec 1976.

Oniga, T.; 1964, "Absorption cooling unit with fixed conoidal reflector," Proceedings of the United Nations conference on new sources of energy. Volume 6, Rome, Italy, 21 Aug 1961. New York,NY: United Nations, pp. 41-50, CONF-610801--P6.

Osore, O. A.; Akers, A.; 1987, "Solar-assisted air conditioning," ASME/JSME/ISES solar energy conference. Solar engineering - 1987, Honolulu, HI, USA, 22 Mar 1987. New York, NY: American Society of Mechanical Engineers, pp. 500-505.

Ouchi, Y.; Otoshi, Sh; Priority date 12 Dec 1983, Japan 9 Apr 1985, Air conditioning apparatus, U. S. Patent #4,509,336.

Parker, A. J. Jr.; Cassel, D. E.; Hedden, R. E.; 1981, "Application of solar cooling for a school building in subtropics," 1st International solar cooling and dehumidifying conference, Caracas, Venezuela, 3 Aug 1980. Oxford, England: Pergamon Press Ltd., pp. 55-76.

Payne, H. R.; Feb 1974, MIUS technology evaluation: lithium bromide--water absorption refrigeration Modular integrated utility systems, ORNL-HUD-MIUS-7. Oak Ridge National Lab., Tenn. (USA).

Pedersen, P. H.; Jan 84, Absorption Chiller Utilizing District Heating System for Air Conditioning, DTH-LFK-F-88-01. Technical Univ. of Denmark, Lyngby. Lab. for Koeleteknik.

Pekhovich, A. I.; Feb 77, Heat Absorption of Cooling Columns (O Teplopogloshchenii Zamorazhivaiushchikh Kolonok), CRREL-TL-593. Cold Regions Research and Engineering Lab Hanover N H.

Peng, C. S. P.; Howell, J. R.; Nov 1981, "Analysis and design of hybrid double-absorption cooling systems for low grade thermal energy applications", J. Sol. Energy Eng. (United States), Vol. 103, No. 4; pp. 331-338.

Perez-Blanco, H.; 1988, "A model of an ammonia-water falling film absorber," Proceedings of the American Society of Heating, Refrigerating and Air-conditioning Engineers, Inc. 1988 winter meeting. Volume 94, Part 1, Dallas, TX, USA, 30 Jan 1988. Atlanta, GA: American Society of Heating Refrigeration and Air Cond., pp. 467-483.

Perez-Blanco, H.; Grossman, G.; 1982, "Open-cycle absorption heat pumps for low-grade heat utilization," Semiannual meeting of the American Society of Heating, Refrigerating, and Air Conditioning Engineers, Houston, TX, USA, 24 Jan 1982. pp. 19, CONF-820112-7.

Perry, E. H.; Dec 1976, Optimization of absorption air-conditioning for solar energy applications. Final report, 1 Sep. 1974 - 31 Oct. 1976, N-77-17560 NASA-CR-150176. Memphis State Univ., TN (USA). Dept. of Mechanical Engineering.

Phillips, B. A.; 1976, "Absorption cycles for air-cooled solar air conditioning," Proceedings of the ASHRAE semiannual meeting. ASHRAE Trans. (United States) Volume 82, Dallas, TX, USA, 1 Feb 1976. pp. 966-974.

Phillips, B. A.; Sep 1990, Development of a high-efficiency, gas-fired, absorption heat pump for residental and small-commercial applications, ORNL/Sub-86-24610/1 DE91010442. Oak Ridge National Lab., TN (USA) Phillips Engineering Co., St. Joseph, MI (USA) 4832000; 9516637.

Phillips, B. A.; Aug 1985, "High efficiency absorption cycles for residential heating and cooling," 20th intersociety energy conversion engineering conference, Miami Beach, FL, USA, 18 Aug 1985. Warrandale, PA: Society of Automotive Engineers, pp. 229-234.

Porter, J. M.; 1976, "Commercially available absorption units on solar-powered cooling systems," Proceedings of the ASHRAE semiannual meeting. ASHRAE Trans. (United States) Volume 82, Dallas, TX, USA, 1 Feb 1976. pp. 943-949.

Porter, James M.; 1976, "The use of commercially available absorption units on solar-powered cooling systems", ASHRAE Trans, Vol. 82, No. Pt. 1; pp. 943-9.

Prasad, M.; Kumar, P.; Jun 1981, "Open solar regeneration of lithium chloride brine", Mechanical Engineering Bulletin, Vol. 12, No. 2; pp. 47-52.

Prasad, T. S.; Williamson, A. G.; 1982, "Survey of solar refrigeration/cooling," CHEMECA 82 - 10th Australian Chemical Engineering Conference 1982, Resource Developments in the Eighties, Aug 24-26 1982. Barton, Australia: National Conference Publication - Institution of Engineers, pp. 253-259.

Radermacher, R.; McLinden, M.; Klein, S.; Didion, D.; Mar 1984, Laboratory evaluation of the steady-state and part load performance of absorption type heating and cooling equipment, NBSIR-84-2816. National Bureau of Standards, Washington, DC (USA). Center for Building Technology.

Rafferty, K. D.; Bloomquist, R. G.; Culver, G.; Ellis, P. F.; Higbee, C.; Kindle, C.; Lienau, P. J.; Lunis, B. C.; Rafferty, K.; Stiger, S.; Wright, P. M.; Mar 1989, Absorption refrigeration Geothermal direct use engineering and design guidebook, DOE/ID/12693-2. Oregon Institute of Technology, Klamath Falls (USA) Oregon Inst. of Tech., Klamath Falls (USA). Geo-Heat Center.

Rauch, J. S.; Wood, B. D.; 1976, "Steady-state and transient performance limitations of the ARKLA Solair absorption cooling system," Joint conference of the American section of the International solar Energy society and The Solar energy society of Canada, Inc. Sharing the Sun: solar technology in the seventies. Volume 3, Winnipeg, Manitoba, Canada, 15 Aug 1976. Cape Canaveral, FL: American Section of the International Solar Energy Society, pp. 387-405, CONF-760842--P3.

Reimann, R. C.; Biermann, W. J.; Oct 1984, Development of a single-family absorption chiller for use in a solar heating and cooling system. Phase III, final report. Volume II, DOE/CS/31587-T3-Vol.2. Carrier Corp., Syracuse, NY (USA). Energy Systems Div.

Renz, M.; Steimle, F.; 1982, "Comparison of the thermodynamic properties of working fluids for absorption systems", Sci. Tech. Froid, No. 3; pp. 61-7.

Rizza, J. J.; 1988, "Lithium bromide and water thermal storage system", J. Sol. Energy Eng, Vol. 110, No. 4; pp. 327-34.

Rosenfeld, L. M.; Dogolyatskiy, V. I.; Dec 75, Investigation of the Operating Processes of an Absorption Lithium-Bromide Refrigeration Machine with a Spray Generator, NASA-TT-F-16805. Scientific Translation Service, Santa Barbara, Calif.

Rosenfeld, L. M.; Gershkovich, V. F.; 1972, "Effectiveness of using absorption and compressor refrigeration machines in central heating and cooling systems", Izv. Sib. Otd. Akad. Nauk Sssr, Ser. Tekh. Nauk (Ussr), Vol. 13, No. 3; pp. p 153-156.

Rozenfeld, L. M.; Bykov, A. V.; Kalnin, I. M.; Shmuilov, N. G.; Nov 1974, "Prospects for the employment of lithium bromide absorption refrigerating machines to increase district heating efficiency", Therm. Eng. (USSR) (Engl. Transl.) (United Kingdom), Vol. 21, No. 11; pp. 50-53.

Rozenfeld, L. M.; Karnaukh, M. S.; 1969, "Lithium bromide absorption units for complex cooling and heating purposes," Progr. Refrig. Sci. Technol., Proc. Int. Congr. Refrig, 1967. Paris, Fr: Inst. Int. Froid, pp. 1377-84.

Sakr, I. A.; Tadros, W. H.; Henseler, H.; Hause, R.; 1988, "Technical and practical experience of running a solar ammonia-water absorption cooling plant," 3rd International Solar Energy Society biennial congress on advances in solar energy technology. Advances in solar energy technology. V. 3. Proceedings of the biennial congress of the International Solar Energy Society, Hamburg, F.R. Germany, 13-18 Sep 1987. Oxford, GB: Pergamon Press, pp. 2613-2616.

Salem, Mohammed Bin Gadhi; Agarwal, R. S.; Kaushik, S. C.; 1984, "Thermodynamic properties state equations of pure methanol and methanol-LiBr x (TIMES) ZnBr2 solutions used in vapour absorption refrigeration andair-conditioning cycle," Solar Buildings, Proceedings of the Fifth SOLERAS Workshop, May 1984. Kansas City, MO, USA: Midwest Research Inst, pp. 731-743.

Salman, M.; Kotob, S.; Juraidan, M.; Apr-Jun 1988, "Optimal control of solar cooling systems", Optimal Control Applications & Methods, Vol. 9, No. 2; pp. 187-199.

San Martin, R. L.; Couch, W. A.; 1975, "Modeling of solar absorption air conditioning," Proceedings of the 21st annual technical meeting. Vol. I, Anaheim, CA, USA, 13 Apr 1975. Inst. of Environmental Sciences, Mt. Prospect, IL, pp. 186-189, CONF-750402--P1.

Sauer, E. A.; Sauer, H. J. Jr.; 1981, "Economic comparison of flat plate and concentrating solar collectors for absorption air-conditioning," University of Missouri Department of Natural Resources conference on energy. Eighth annual UMR-DNR conference on energy: extended abstracts, Rolla, MO, USA, 6 Nov 1981. pp. 44-47, CONF-811137-Absts.

Saunders, J. H.; Wilkinson, W. H.; 1989, "A hybrid space conditioning system combining a gas-fired chiller and a liquid desiccant dehumidifier," 11th annual American Society of Mechanical Engineers solar energy conference. Solar engineering - 1989, San Diego, CA (USA), 2-5 Apr 1989. New York, NY: American Society of Mechanical Engineers, pp. 207-212 544.

Saunders, R. G.; Davis, J. N.; Nov 1978, "Santa Clara Community Recreation Center solar heating and cooling project," Pre-printed papers of the second solar heating and cooling commercial demonstration program contractors' review, San Diego, CA, USA, 13 Dec 1978. pp. 255-260, HCP/M4131-01 CONF-781220.

Sayigh, A. A. M.; 1985, "Cooling a solar house using absorption machine," INTERSOL '85 - Solar energy--the diverse solution. Proceedings of the ninth biennial congress of the International Solar Energy Society, Montreal, Canada, 23 Jun 1985. Elmsford, NY: Pergamon Books Inc., pp. 712-717.

Sayigh, A. A. M; 1981, "Solar air conditioning in a hot arid climate," 2nd Miami international conference on alternative energy sources. Altern. Energy Sources (United States), Miami Beach, FL, USA, 10 Dec 1979. pp. 761-773.

Sayigh, A. A. M.; 1988, "Solar energy cooling in building," International Solar Energy Society biennial congress on advances in solar energy technology. Advances in solar energy technology. V.3. Proceedings of the biennial congress of the International Solar Energy Society, Hamburg, F.R. Germany, 13-18 Sep 1987. Oxford, GB: Pergamon Press, pp. 2426-2433, 2442-2448.

Sayigh, A. A. M.; 1981, "Three and a half ton solar absorption air conditioner's performance in Riyadh, Saudi Arabia," 1st international solar cooling and dehumidifying conference, Caracas, Venezuela, 3 Aug 1980. Oxford, England: Pergamon Press Ltd., pp. 49.

Sayigh, A. A. M.; Al-Jandal, S.; Ahmed, H.; 1985, "Cooling KISR solar house using absorption machine," INTERSOL '85 - Solar energy--the diverse solution. Proceedings, Montreal, Canada, 23 Jun 1985. Ottawa, Ontario: SESCI, pp. 156.

Scalabrin, G.; Scaltriti, G.; 15 Oct 1987, "Modeling and experimental analysis of an efficient absorber for air dehumidification", Waerme- Stoffuebertrag. (Germany, Federal Republic of), Vol. 22, No. 1/2; pp. 111-124.

Scalabrin, G.; Scaltriti, G.; 1985, "New energy saving process for air dehumidification: Analysis and applications", ASHRAE Transactions: Technical Papers presented at the 1985 Winter Meeting, Vol. 91, No. pt 1A; pp. 426-441.

Schiebout, F. L.; 30 Mar 1978, "Improving the performance of absorption water chillers using combination electric centrifugal and absorption systems", Plant Eng. (Barrington, Ill.) (United States), Vol. 32, No. 7; pp. 225-226.

Schlepp, D. R.; Collier, R. K.; Mar 1981, "Use of an open-cycle absorption system for heating and cooling," Annual conference of the International Solar Energy Society, Philadelphia, PA, USA, 26 May 1981. pp. 7, SERI/TP-631-1159 CONF-810509-11.

Schlepp, D. R.; Collier, R. K.; 1981, "Use of an open-cycle absorption system for heating and cooling," AS/ISES 1981, Proceedings of the 1981 Annual Meeting - American Section of the International Solar Energy Society, Inc, May 26-30 1981. Newark, Del, USA: Am Sect of the Int Sol Energy Soc, Inc, pp. 651-655.

Schlepp, Dennis R.; 1982, "National solar desiccant cooling program," Annual DOE Active Solar Heating and Cooling Contractors' Review Meeting: Proceedings and Project Summaries, Sep 9-11 1981. Washington, DC, USA: DOE, pp. 3. 1-3. 2, CONF-810912.

Schniewind, B. J.; 26 Feb 85, Optimum Use of Lithium Bromide/Water Absorption Refrigerators in Mine Air Conditioning, NP-7770127. Technische Univ. Berlin (Germany, F.R.). Fachbereich Bergbau und Geowissenschaften.

Scholten, W. Curran, H.; Jun 1979, "Active cooling update", Sol. Age (United States), Vol. 4, No. 6; pp. 37-41.

Scholten, W. B.; Morehouse, J. H.; 31 Oct 1983, Active Program Research Requirements (APRR). Executive summary, DOE/SF/11573-T1-Exec.Summ. Science Applications International Corp., McLean, VA (USA).

Schrenk, G.; Lior, N.; Jul 1976, Absorption cycle solar heat pump and the potential role of the thermochemical storage, SAN-1122-76/2. Univ. of Pennsylvania, Philadelphia Atlas Corp., Santa Clara, CA (USA).

Shavit, A.; Haim, I.; Borde, I.; Jelinek, M.; 31 May 89, Simulation and analysis of high efficiency absorption systems for solar cooling. Phase 2, Final report Progress rept, 1477386 DE90010964/XAB DOE/SF/15894-T1. Technion - Israel Inst. of Tech., Haifa. Faculty of Mechanical Engineering. 016872033; 9699404.

Shih, Ping-Shian; 1979, Design parameters for solar powered absorption cooling systems with chilled water storage, PhD Thesis, Stillwater, OK: Oklahoma State University.

Shimokawa, K.; 1979, "Solar heating and cooling system for large building," Interregional symposium on solar energy for development, Tokyo, Japan, 5 Feb 1979. pp. 19, CONF-790203.

Shimokawa, K.; Fujidai, S.; Tokai, M.; Muro, M.; Ohka, K.; Ohishi, O.; Dec 1976, "Development of a solar cooling, heating, and domestic hot water supply system by Kawasaki heavy industries", Temptrol (Japan), Vol. 3, No. 12; pp. 1, 3.

Shwarts, I.; Shitzer, A.; Nov 1977, "Solar absorption system for space cooling and heating", ASHRAE J. (United States), Vol. 19, No. 11; pp. 51-54.

Siddiqui, M. Altamush; 1991, "Economic biogas and cooling water rates in a lithium bromide-water absorption system", Int. J. Refrig, Vol. 14, No. 1; pp. 32-8.

Siddiqui, M. Altamush; 1991, "Optimal cooling and heating performance coefficients of four biogas-powered absorption systems", Energy Convers. Manage, Vol. 31, No. 1; pp. 39-49.

Siebe, D. A.; 1986, Evaluation of air-conditioning systems utilizing liquid absorbents regenerated by solar energy, PhD Thesis, Tempe, AZ: Arizona State Univ.

Siebe, D. A.; Wood, B. D.; Collier, R. K.; May 1986, Open-cycle absorption solar cooling. Part III. Evaluation of air-conditioning systems utilizing liquid absorbents regenerated by solar energy. Final report, ERC-R-86020C. Arizona State Univ., Tempe (USA). Solar Energy Lab.; Enerscope, Inc., Glendale, AZ (USA).

Simmons, M.; Wahlig, M.; Jul 1976, Ammonia water absorption air conditioner, SAN-1122-76/2. Atlas Corp., Santa Clara, CA (USA).

Singh, B.; Prakash, R.; Gupta, C. P.; Burley, S. M.; Coleman, M. J.; 1990, "The characteristics of intermittent solar powered aqua-ammonia absorption refrigeration system Proceedings of the 1990 annual conference of the American Solar Energy Society, Inc," Proceedings of the 1990 19th Annual Conference of the American Solar Energy Society, Inc. Solar '90 and 15th National Passive Solar Conference, Austin, TX (USA), Mar 19-22, 1990. Boulder, CO (USA): American Solar Energy Society, pp. 509-518.

Smith, G. B.; Riley, M.; 1979, "Solar absorption cycle cooling installations," SUN II International Solar Energy Society meeting, Atlanta, GA, USA, 28 May 1979. Elmsford, NY: Pergamon Press Inc., pp. 729-733.

Sofrata, H.; 1984, "Solar-powered dual cycle absorption cooling system," Proceedings of the fifth SOLERAS workshop, Riyadh, Saudi Arabia, 5 May 1984. pp. 177-204, MRI/SOL-1901 CONF-8405149.

Sofrata, H.; Khoshaim, B.; Megahed, M.; Nasser, A.; Dec 1980, "Computer package for the design and optimization of absorption air conditioning system operated by solar energy," 3rd Miami international conference on alternative energy sources, Miami Beach, FL, USA, 15 Dec 1980. pp. 221-232.

Sofrata, H.; Khoshaim, B.; Nasser, A.; 1981, "A solar powered lithium bromide absorption system", Alternative Energy Sources, Volume Date 1979, Vol. 2, No. 2; pp. 727-39.

Sofrata, H.; Khoshaim, B.; Nasser, A.; Megahed, M.; Nov 1981, "Solar-powered Li-Br dual cycle", Appl. Energy (United Kingdom), Vol. 9, No. 3; pp. 185-191.

Sofrata, H. M.; Nasser, A. E.; Megahed, M. R.; Aug 1981, "The coefficient of performance for a solar absorption dual cycle", Appl. Energy (United Kingdom), Vol. 8, pp. 275-280.

Sonoda, T.; Kurikka, P.; Halonen, A.; 1985, "Wasted heat recovery and temperature upgrading by absorption heat pump and other systems," World congress on heating, ventilating and air conditioning--international exhibition. CLIMA 2000. Pt. 6. Heating, ventilating and air-conditioning systems, Copenhagen, Denmark, 25 Aug 1985. Charlottenlund, Denmark: VVS Kongres - VVS Messe, pp. 111-116.

Staats, W. R.; 1978, "Solar-augmented heating and air-conditioning systems," US commerce trade show, Tehran, Iran, 30 Apr 1978. Chicago, IL: Gas Developments Corp., pp. 10.

Stump, L. A.; 1978, "Absorption equipment for solar air conditioning", Build. Syst. Des. (United States), Vol. 75, No. 4; pp. 36-45.

Sung, H. M.; Filed date 17 Jul 1981 26 Apr 1983, Method and apparatus for co-generation of electrical power and absorption-type heat pump air conditioning, U. S. Patent #4,380,909.

Suri, R. K.; Al-Madani, K.; Ayyash, S.; 1984, "Choice of thermal energy system for solar absorption cooling", Sol. Energy (United Kingdom), Vol. 32, No. 2; pp. 181-187.

Suri, R. K.; Al-Madani, K.; Maheshwari, G.; 1983, "Optimization of chiller and thermal energy reservoir capacities for solar absorption cooling systems," Solar world congress. Vol. 1, Perth, Australia, 15 Aug 1983. Oxford, England: Pergamon Press, pp. 348-352.

Suri, R. K.; Ayyash, S.; 1982, "Solar absorption cooling effect on operational parameters on power saving", Int. J. Refrig, Vol. 5, No. 5; pp. 274-9.

Swartman, R. K.; 1979, Solar energy conversion: an introductory course, New York, NY: Pergamon Press. pp. 393-416.

Swartman, R. K.; Jul 1976, Intermittent absorption refrigeration systems for air conditioning, SAN-1122-76/2. Univ. of Ontario, CA Atlas Corp., Santa Clara, CA (USA).

Szokolay, S. V.; 1978, "Solar cooling and air conditioning at the University of Queensland," International conference on solar building technology. Solar technology for building. Volume 2. Sessions 5 to 9, London, UK, 25 Jul 1977. London, England: RIBA Publications Ltd., pp. 444-456.

Tabor, H.; Stambolis, C. ed); 1978, "Cooling with solar energy: absorption machine versus expander plus compressor," International conference on solar building technology. Solar technology for building. Volume 2. Sessions 5 to 9, London, UK, 25 Jul 1977. London, England: RIBA Publications Ltd., pp. 424-427.

Taylor, R. J.; Toth, W. J.; 1977, "Ammonia absorption geothermal district heating and air-conditioning system," Geothermal: state of the art, San Diego, California, United States of America (USA), 9 May 1977. Davis, CA: Geothermal Resources Council, pp. 287-288, CONF-770569.

Teranasthiarphan, Kitti; 1981, Thermodynamic assessment of cooling by solar-powered lithium bromide-water absorption cycles, Eng. Thesis, Pittsburgh, PA, USA: Carnegie-Mellon Univ.

Tsilingiris, P. T.; 1991, "Large scale solar cooling design using salt gradient solar ponds", Renewable Energy, Vol. 1, No. 2; pp. 309-314.

Tyagi, K. P.; 1989, "The effect of cooling water on the performance of vapour absorption refrigeration system," Proceedings of the 24th intersociety energy conversion engineering conference. Volume 4 Energy management and renewable resource systems, Arlington, VA (USA), 6-11 Aug 1989. Piscataway, NJ: IEEE Service Center, pp. 1897-1902.

Tyagi, K. P.; 1989, "Effect of cooling water on the performance of vapour absorption refrigeration system," Proceedings of the 24th Intersociety Energy Conversion Engineering Conference - IECEC-89. Part 4 (of 6): Energy Management and Renewable Resource Systems. Proceedings of the Intersociety Energy Conversion Engineering Conference v 4., Washington, DC, USA, 1989 Aug 6-11. Piscataway, NJ (USA): IEEE, IEEE Service Center, pp. 1897-1902.

Ullah, M. B.; 1982, "Simulation studies of a LiBr-water absorption solar cooling system on a laboratory building at Dhahran," 4th Miami international conference on alternative energy sources, Miami Beach, FL, USA, 14 Dec 1981. Coral Gables, FL: Univ. of Miami, pp. 74-77.

Ullah, M. Barkat; 1982, "Simulation studies of a lithium bromide-water absorption solar cooling system on a laboratory building at Dhahran", Altern. Energy Sources, Vol. 4, No. 2; pp. 297-318.

Uppal, A. H.; Muneer, T.; 1984, "Solar operated absorption air-conditioner for a Kufra House", Appl. Energy (United Kingdom), Vol. 16, No. 4; pp. 259-281.

USDOE; Nov 1984, Active solar heating and cooling Renewable technologies program summaries, DOE/CE-0105. USDOE Assistant Secretary for Conservation and Renewable Energy, Washington, DC.

USDOE; Sep 1981, "Annual DOE active solar heating and cooling contractors' review meeting," Premeeting proceedings and project summaries, Washington, DC, USA, Sep 1981. Washington, DC, USA: DOE, pp. 286, CONF-810912.

Valentine, Dale M.; 1975, "Liquid absorption dehumidification systems," Winter Meeting. ASHRAE Transactions v 81. pt 1, Atlantic City, NJ, Jan 26-30 1975. Atlanta, Ga, USA: ASHRAE, pp. 615-621.

Van den Bulck, E.; Trommelmans, J.; Berghmans, J.; 1982, "R22-E 181 solar absorption cooling installation", Sci. Tech. Froid, No. 3; pp. 83-7.

Van Hattem, D.; 1983, "Activities on solar space cooling at the joint research centre in ISPRA," Solar Energy and the Arab World, First Arab International Solar Energy Conference, Dec 2-8 1983. Oxford, Engl and New York, NY, USA: Pergamon Press, pp. 38-47.

Van Hattem, D.; Dato, P. A.; Jun 1981, "Description and performance of an active solar cooling system, using a LiBr-H/sub 2/O absorption machine", Energy Build. (Switzerland), Vol. 3, No. 2; pp. 169-196.

Van Hoeve, A. P.; Jan 83, Computersimulatie van en Experimenteel Onderzoek aan NH3-H2O Absorptiekoelsystemen. Deel 1. Verslag. Deel 2. Appendices (Computer Simulation of an Experimental Research on NH3-H2O Absorption Cooling Systems. Volume 1. Text. Volume 2. Appendices), S-742. Technische Hogeschool Delft (Netherlands). Lab. voor Koudetechniek en Klimaatregeling.

Van Schie, J. P.; May 83, Technische Evaluatie van een door Zonnewarmte Aangedreven Absorptiekoelmachine (LiBr - H2O) (Technical Evaluation of a Solar-Powered Absorption Cooling System (LiBr-H2O)), ST-201. Technische Hogeschool Delft (Netherlands). Lab. voor Koudetechniek en Klimaatregeling.

Vardon, J. M.; Apr 1980, "Solar powered absorption air conditioning", Int. J. Ambient Energy (United Kingdom), Vol. 1, pp. 117-126.

Varma, H. K.; 1978, "Design of 1-ton solar operated LiBr-water air-conditioning system with special reference to solar part," National solar energy convention of Solar Energy Society of India. Solar energy for rural development, Bhavnagar, India, 20 Dec 1978. pp. 325-330, CONF-781261.

Velluet, P.; Dehausse, R.; 1986, Self Operating Absorption Cooling System Using Solar Energy: Small Power Experimental Plant: Final Report, EUR-9837. Ecole Nationale Superieure des Mines de Paris (France). Centre d'Energetique Armines.

Vliet, G. C.; 1980, "Double effect absorption cooling," Proceedings of the first SOLERAS workshop on solar cooling, Dhahran, Saudi Arabia, 1 Apr 1980. pp. 245-250, MRI/SOL-0601 CONF-8004244.

Vliet, G. C.; 1980, "Multiple effect absorption cycle analysis," Proceedings of the annual DOE active solar heating and cooling contractors' review meeting, Lake Tahoe, NV, USA, 26 Mar 1980. pp. 2.17-2.18, CONF-800340.

Vliet, G. C.; Mar 1982, "Multiple-effect absorption cycle solar cooling," Proceedings of the DOE heat-pump contractors program integration meeting, McLean, VA, USA, 2 Jun 1981. pp. 65-68, CONF-810672.

Vliet, G. C.; 1978, State of the art of solar cooling, CONF-7804121-(Absts.). Univ. of Texas, Austin.

Vliet, G. C.; Kim, J.; 1983, "Modeling of double effect water-lithium bromide absorption cycle," Proc. Intersoc. Energy Convers. Eng. Conf 18th, pp. 1900-5.

Vliet, G. C.; Lawson, M. B.; Lithgow, R. A.; Dec 1980, Water-lithium bromide double-effect absorption cooling analysis, DOE/SF/10540-T1. Texas Univ., Austin (USA). Center for Energy Studies.

Vliet, G. C.; Lawson, M. B.; Lithgow, R. A.; Dec 1980, Water-lithium bromide double-effect absorption cooling analysis. Final report, DOE/SF/10540-T2. Texas Univ., Austin (USA). Center for Energy Studies.

Vliet, G. C.; Saiidi, M. J.; Oct 1978, "Double effect absorption cooling with solar energy," Use of solar energy for the cooling of buildings, San Francisco, CA, USA, 15 Feb 1978. pp. 47-54, CONF-780249.

Vliet, Gary C.; Lawson, Michael B.; Lithgow, Rodolfo A.; 1982, "Water-Lithium Bromide Double-Effect Absorption Cooling Cycle Analysis," Technical and Symposium Papers Presented at the 1982 Semiannual Meeting of the American Society of Heating, Refrigerating and Air-Conditioning Engineers, Inc. ASHRAE Transactions v 88 pt 1, Jan 24-28 1982. Atlanta, Ga, USA: ASHRAE, pp. 811-823.

Wahlig, M.; Heitz, A.; Boyce, B.; 1980, "Overview-absorption/Rankine solar cooling program," Proceedings of the annual DOE active solar heating and cooling contractors' review meeting, Lake Tahoe, NV, USA, 26 Mar 1980. pp. 2.1-2.4, CONF-800340.

Wahlig, M.; Heitz, A.; Angerman, H.; Glas, R.; Warren, M.; Mar 1982, "Overview of active solar absorption/rankine cooling program," Proceedings of the DOE heat-pump contractors program integration meeting, McLean, VA, USA, 2 Jun 1981. pp. 27-32, CONF-810672.

Wahlig, Michael; Warren, Mashuri; Glas, Ron; 1982, "Technical support for the active solar Rankine and absorption cooling program," Annual DOE Active Solar Heating and Cooling Contractors' Review Meeting: Proceedings and Project Summaries, Sep 9-11 1981. Washington, DC, USA: DOE, pp. 8. 3-8. 5, CONF-810912.

Ward, D. S.; Mar 1979, "Evaluation of a residential solar heating and cooling system-CSU Solar House III," Proceedigns of 3rd annual solar heating and cooling Research and Development Branch contractors' meeting, Washington, DC, USA, 24 Sep 1978. pp. 418-421, CONF-780983.

Ward, D. S.; 1979, "Solar absorption cooling feasibility", Sol. Energy (United States), Vol. 22, No. 3; pp. 259-268.

Ward, D. S.; Duff, W. S.; Ward, J. C.; Löf, G. O. G.; 1978, Integration of evacuated tubular solar collectors with lithium bromide absorption cooling systems, COO-2858-6. Solar Energy Appl. Lab., Colorado State Univ Fort Collins, Colo., USA.

Ward, D. S.; Duff, W. S.; Ward, J. C.; Löf, G. O. G; 1979, "Integration of evacuated tubular solar collectors with lithium bromide absorption cooling systems", Sol. Energy (United States), Vol. 22, No. 4; pp. 335-341.

Ward, D. S.; Uesaki, T.; Löf, G. O. G.; 1976, "Cooling subsystem design in CSU Solar House III," Sharing the Sun: solar technology in the seventies. Volume 3, Winnipeg, Manitoba, Canada, 15 Aug 1976. American Section of the International Solar Energy Society, Cape Canaveral, FL, pp. 68-89, CONF-760842--P3.

Ward, D. S.; Ward, J. C.; Oberoi, H. S.; Mar 1979, Residential solar heating and cooling using evacuated tube solar collectors: CSU Solar House III. Final report, management summary, February 1, 1976-September 30, 1978, COO-2858-24(Mgmt.Summ.). Colorado State Univ., Fort Collins (USA). Solar Energy Applications Lab.

Ward, D. S.; Ward, J. C.; Oberoi, H. S.; Jan 79, Solar Cooling Performance in CSU Solar House III, ERA citation 04:044571. Colorado State Univ., Fort Collins. Solar Energy Applications Lab.

Warren, M. L.; Aug 1981, "Overview of systems analysis, market assessment, and controls work," Annual DOE active solar heating and cooling contractor's review meeting, Washington, DC, USA, Sep 1981. pp. 15, LBL-13052 CONF-810912-14.

Warren, M. L.; Wahlig, M. A.; 1988, "Analysis and comparison of active solar desiccant and absorption cooling systems," Solar engineering - 1988. 10th annual American Society of Mechanical Engineers solar energy conference, Denver, CO, USA, 10 Apr 1988. New York, NY: American Society of Mechanical Engineers, pp. 509-516.

Warren, M. L.; Wahlig, M.; Feb 1991, "Analysis and comparison of active solar desiccant and absorption cooling systems. Part 2 Annual simulation results", Journal of Solar Energy Engineering (USA), Vol. 113, No. 1; pp. 31-35.

Warren, M. L.; Wahlig, M.; May 1985, "Cost and performance goals for commercial active solar absorption cooling systems", J. Sol. Energy Eng. (United States), Vol. 107, No. 2; pp. 136-140.

Warren, M. L.; Wahlig, M.; Ferber, R. R.; 1986, "Performance comparison of absorption and desiccant solar cooling systems," Solar engineering - 1986. ASME Solar Energy Division conference, Anaheim, CA, USA, 14 Apr 1986. New York, NY: American Society of Mechanical Engineers, pp. 270-281.

Warren, Mashuri L.; Wahlig, Michael; 1991, "Analysis and comparison of active solar desiccant and absorption cooling systems: part I - Model description", J. Sol. Energy Eng, Vol. 113, No. 1; pp. 25-30.

Weber, B.; Radermacher, R.; Didion, D.; Apr 1984, Test procedures for rating residential heating and cooling absorption equipment, DOE/OR/20890-2 NBSIR-84-2867. National Bureau of Standards, Washington, DC (USA). Center for Building Technology.

Weber, K. H.; Palz, W.; 1982, "Development of independent solar absorption cooling plants with concentrating collectors," EC Contractors' meeting on solar energy applications to dwellings, Athens, Greece, 11 Nov 1981. Dordrecht, Netherlands: D. Reidel Publishing Company, pp. 71-79.

Westinghouse Electric Corp., Baltimore Md Special Systems; Dec 74, Solar Heating and Cooling Experiment for a School in Atlanta Design rept. Jun-Sep 74, NSF/RA/N-74-122. Westinghouse Electric Corp., Baltimore, Md. Special Systems.

Wicks, F.; 1989, "Engine driven combined compression and absorption cycle air conditioner for maximum fuel utilization and low temperature heat recovery," Waste Heat Utilization: Presented at the Winter Annual Meeting of the ASME., San Francisco, CA (USA), Dec 10-15, 1989. New York, NY (USA): American Society of Mechanical Engineers (ASME), pp. 31-35, HTD Vol. 118.

Wicks, Frank; 1989, "Design and benefits of a non-electric air conditioner that combines compression and absorption cycles," Proceedings of the 24th Intersociety Energy Conversion Engineering Conference - IECEC-89. Part 5 (of 6): Systems, Cycles and Engines. Proceedings of the Intersociety Energy Conversion Engineering Conference v 5., Washington, DC (USA), Aug 6-11, 1989. Piscataway, NJ (USA): IEEE, IEEE Service Center, pp. 2561-2563.

Wilbur, P. J.; 1980, "Absorption systems," Proceedings of the first SOLERAS workshop on solar cooling, Dhahran, Saudi Arabia, 1 Apr 1980. pp. 1-18, MRI/SOL-0601 CONF-8004244.

Wilbur, P. J.; Mancini, T. R.; 1976, "Comparison of solar absorption air conditioning systems", Sol. Energy (United States), Vol. 18, No. 6; pp. 569-576.

Wilbur, P. J.; Mitchell, C. E.; Jul 1975, "Solar absorption air conditioning alternatives", Sol. Energy (United States), Vol. 17, No. 3; pp. 193-199.

Wilkinson, W. H.; 1991, "Simplified, high-efficiency DUBLSORB system," ASHRAE Winter Meeting - Technical Papers. ASHRAE Transactions pt 1., New York, NY, USA, 1991 Jan 19-23. Atlanta, GA (USA): ASHRAE, pp. 413-419.

Williams, D. A.; Chung, R.; Löf, G. O. G.; Fester, D. A.; Duffie, J. A.; 17 Oct 1957, Intermittent absorption cooling systems, with solar regeneration. Paper-57-A-260 Proc. of Annual meeting of the ASME, New York, 1-6 Dec, 1957, N-73-74265. ASME, New York. (Solar Energy Applications Committee) NSF and Rockefeller Foundation.

Williams, J. R.; 1979, Solar energy conversion: an introductory course, New York, NY: Pergamon Press. pp. 377-391.

Won, S. H.; Chung, H. S.; Lee, H.; 1991, "Simulation and thermodynamic design data study on double-effect absorption cooling cycle using water-LiBr-LiSCN mixture", Heat Recovery Systems and CHP (UK), Vol. 11, No. 2-3; pp. 161-168.

Won, S. H.; Lee, W. Y.; 1991, "Thermodynamic design data for double-effect absorption heat pump systems using water-lithium chloride-cooling", Heat Recovery Systems and CHP (UK), Vol. 11, No. 1; pp. 41-48.

Wood, B. D.; Jun 1986, Phase I, open-cycle absorption solar cooling. Part IV. Executive summary analysis and resolution of critical issues and recommendations for Phase II. Final report, ERC-R-86020D. Arizona State Univ., Tempe (USA). Solar Energy Lab.

Wood, B. D.; Berman, N. S.; Kim, K.; Chau, D. S. C; Feb 1991, Heat transfer additives for absorption cooling system fluids. Annual report, October 1989-September 1990, PB-91-182998/XAB ASU-CR-R--91030. Arizona State Univ., Tempe, AZ (USA). Center for Energy Systems Research 9524542.

Wood, B. D.; Siebe, D. A.; Collier, R. K.; Jul 1985, "Open cycle absorption system: a low cost solar heating and cooling option," Solar buildings conference: realities for today - trends for tomorrow. Proceedings, Washington, DC, USA, 18 Mar 1985. pp. 94-100, CONF-850388.

Wood, Byard D.; Siebe, Donald A.; Collier, R. Kirk; 1985, "Open cycle absorption system: a low cost solar heating and cooling option," Proceedings of the Solar Buildings Conference, Mar 18-20 1985. Washington, DC, USA: US DOE, pp. 93-100.

Worsoee-Schmidt, P.; 1988, "Absorption cooling Advances in solar energy technology," Proceedings of the biennial congress of the International Solar Energy Society on advances in solar energy technology, Hamburg, F.R. Germany, 13 Sep 1987. Oxford, GB: Pergamon Press, pp. 2418-2425.

Wu, Chih; 1982, "Cad of a solar absorption air conditioning system," CAD 82, 5th International Conference and Exhibition on Computers in Design Engineering, Mar 30-Apr 1 1982. Guildford, Surrey, Engl: Butterworths, pp. 590-596.

Yamamoto, Hideki; Sanga, Seiji; Tokunaga, Junji; Nov 1987, "Performance test of absorption air-cooling unit using NH//4Br-NH//3 AND NH//4I-NH//3 System", Ind Eng Chem Res, Vol. 26, No. 11; pp. 2389-2393.

Yang, O. Y.; Tsujita, M.; Sato, G. T.; Sept 1970, "Thermoynamic study on the suction cooling gas turbine cycle combined with absorption- type refrigerating machine using wasted heat", Bulletin of the JSME, Vol. 13, No. 63; pp. 1111-22.

Yang, R.; Yan, W. J.; Horigome, T.; Kimura, K.; Takakura, T.; Nishino, T.; Fujii, I.; 1990, "Simulation study for an open-cycle absorption solar cooling system operated in humid area," Clean and Safe Energy Forever. V.1 - World congress of the International Solar Energy Society (ISES), Kobe (Japan), Sep 4-8, 1989. Oxford (GB) Pergamon Press, pp. 885-889.

Yang, Ru; Chen, J. H.; May 1991, "A numerical study of the non-absorbable effects on the falling liquid film absorption", Waerme-und Stoffuebertragung (Germany), Vol. 26, No. 4; pp. 219-223.

Yang, W. J.; Guo, K. H.; Yuncu, H.; Paykoc, E.; 1987, "Solar-assisted lithium-bromide absorption cooling systems Solar energy utilization," Solar energy utilization, Izmir, Turkey, 23 Jun 1986. Hingham, MA: Martinus Nujhoff Publishing, pp. 409-423.

Yanniotis, S.; Schwartzberg, H.; Jul-Aug 1986, "Evaporative cooling of foods in an absorption-driven vacuum cooler", Transactions of the American Society of Agricultural Engineers (General Edition), Vol. 29, No. 4; pp. 1164-1170.

Yaron, I.; Borde, I.; Jelinek, M.; May 1983, "Performance characteristics of absorption cooling cycle operated by low thermal potential energy sources", Journal of Engineering for Industry, Transactions ASME, Vol. 105, No. 2; pp. 94-99.

Yaron, I.; Borde, I.; Jelinek, M.; 1978, "Solar powered absorption refrigerator for industrial cooling applications", Sci. Tech. Froid, No. 3; pp. 243-8.

Yellott, J. I.; Jun 1982, "Operation of an active solar air-conditioning system in a hot, dry climate," Semi-annual meeting of the American Society of Heating, Refrigerating, and Air Conditioning Engineers. ASHRAE Trans. (United States) Volume 88, Houston, TX, USA, 24 Jan 1982. pp. 987-1000.

Yellott, J. I.; Apr 1981, "Solar air-conditioning-active, hybrid and passive," Solar technology assessment conference, Orlando, FL, USA, 29 Jan 1981. pp. 59, CONF-810125-4.

Ziegler, F.; Brandl, F.; Voelkl, J.; Alefeld, G.; 1985, "Cascading two-stage sorption chiller system consisting of a water-zeolite high temperature stage and a water-LiBr low-temperature stage," Proceedings of the absorption heat pumps congress, Paris, France, 20 Mar 1985. pp. 231-238, EUR-10007 CONF-8503282.

Ziegler, F.; Haemmer, G.; 1991, "Experimental results of a double-lift compression-absorption heat pump Applications and efficiency of heat pump systems," International conference on applications and efficiency of heat pump systems, Munich (Germany), Oct 1-3, 1990. Oxford (GB) Scientific and Technical Information, pp. 49-58.

Document Control Page	1. NREL Report No. NREL/TP-254-4147	2. NTIS Accession No. DE93000013	3. Recipient's Accession No.

4. Title and Subtitle Desiccant Cooling: State-of-the-Art Assessment	5. Publication Date October 1992 6.
7. Author(s) Ahmad A. Pesaran, Terry R. Penney, Al W. Czanderna	8. Performing Organization Rept. No. TP-254-4147
9. Performing Organization Name and Address National Renewable Energy Laboratory 1617 Cole Blvd. Golden, Colorado 80401-3393	10. Project/Task/Work Unit No. BE01.2041 and BE21.2031 11. Contract (C) or Grant (G) No. (C) (G)
12. Sponsoring Organization Name and Address National Renewable Energy Laboratory 1617 Cole Blvd. Golden, CO 80401-3393	13. Type of Report & Period Covered Technical Report 14.

15. Supplementary Notes

16. Abstract (Limit: 200 words)

The objectives of this document are to present an overview of the work accomplished to date on desiccant cooling to provide assessment of the state of the art of desiccant cooling technology in the field of desiccant materials, dehumidifier components, desiccant systems, and models. The report also discusses the factors that affect the widespread acceptance of desiccant cooling technology.

This report is organized as follows. First, a basic description and historical overview of desiccant cooling technology is provided. Then, the recent research and development (R&D) program history (focusing on DOE's funded efforts) is summarized. The status of the technology elements (materials, components, systems) is discussed in detail, and a preliminary study on the energy impact of desiccant technology is presented. R&D needs for advancing the technology in the market are identified. The National Renewable Energy Laboratory's unique desiccant test facilities and their typical outputs are described briefly. Finally, the results of a comprehensive literature search on desiccant cooling are presented in a bibliography. The bibliography contains approximately 900 citations on desiccant cooling.

17. Document Analysis

a. Descriptors

desiccants; cooling; air conditioning; absorption cooling; dehumidification

b. Identifiers/Open-Ended Terms

c. UC Categories

231

18. Availability Statement National Technical Information Service U.S. Department of Commerce 5285 Port Royal Road Springfield, VA 22161	19. No. of Pages 227 20. Price A11

Form No. 0069E (6-30-87)