Proceedings of IMECE2006
2006 ASME International Mechanical Engineering Congress and Exposition
November 5-10, 2006, Chicago, Illinois, USA

IMECE2006-13201

COMPARATIVE PERFORMANCE ANALYSIS OF IADR OPERATING IN NATURAL GAS-FIRED AND WASTE-HEAT CHP MODES

Andrei Y. Petrov
Oak Ridge National Laboratory
P.O. Box 2008
Oak Ridge, TN 37831-6070
petrovay@ornl.gov

James R. Sand
Oak Ridge National Laboratory
P.O. Box 2008
Oak Ridge, TN 37831-6070
sandjr@ornl.gov

Abdolreza Zaltash
Oak Ridge National Laboratory
P.O. Box 2008
Oak Ridge, TN 37831-6070
zaltasha@ornl.gov

John Fischer
SEMCO Incorporated
1800 East Pointe Drive
Columbia, MO 65201
johnfischer@bellsouth.net

Rick Mitchell
SEMCO Incorporated
1800 East Pointe Drive
Columbia, MO 65201
rickmitchell@semcoinc.com

ABSTRACT

Fuel utilization can be dramatically improved through effective recycle of "waste" heat produced as a by-product of on-site or near-site power generation technologies. Development of modular compact cooling, heating, and power (CHP) systems for end-use applications in commercial and institutional buildings is a key part of the Department of Energy's (DOE) energy policy. To effectively use the thermal energy from a wide variety of sources which is normally discarded to the ambient, many components such as heat exchangers, boilers, absorption chillers, and desiccant dehumidification systems must be further developed.

Recently a compact, cost-effective, and energy-efficient integrated active-desiccant vapor-compression hybrid rooftop (IADR) unit has been introduced in the market. It combines the advantages of an advanced direct-expansion cooling system with the dehumidification capability of an active desiccant wheel. The aim of this study is to compare the efficiency of the IADR operation in baseline mode, when desiccant wheel regeneration is driven by a natural gas burner, and in CHP mode, when the waste heat recovered from microturbine exhaust gas is used for desiccant regeneration. Comparative analysis shows an excellent potential for more efficient use of the desiccant dehumidification as part of a CHP system and the importance of proper sizing of the CHP components. The most crucial factor in exploiting the efficiency of this application is the maximum use of thermal energy recovered for heating of regeneration air.

NOMENCLATURE

Abbreviations:

CHP	= Cooling, Heating, and Power
DX	= direct expansion
DW	= desiccant wheel
HHV	= higher heating value
HRU	= heat recovery unit
HVAC	= Heating, Ventilation, and Air Conditioning
IADR	= Integrated Active Desiccant-Vapor Compression Hybrid Rooftop
MTG	= microturbine

Variables:

G	= flowrate
Q_{HRU}	= heat recovered by HRU
$Q_{in\text{-}NG}$	= natural gas input (higher heating value)
Q_{MTG}	= MTG exhaust gas heat supplied to HRU
Q_{TC}	= IADR total capacity
RH	= relative humidity
T	= temperature
W_{el}	= electric power output from MTG

Copyright © 2006 by ASME

$W_{el\text{-}res}$ = Remaining electric power output from MTG after satisfaction of total parasitic needs of HRU and IADR units

$\Sigma W_{par\text{-}HRU}$ = total electrical parasitics of HRU

$\Sigma W_{par\text{-}IADR}$ = total electrical parasitics of IADR unit

ΣW_{par} = sum of total electrical parasitics of HRU and IADR units

x = number of IADR units

INTRODUCTION

The introduction of new generations of thermally-activated heating, ventilation, and air-conditioning (HVAC) technologies is a breakthrough for cooling, heating, and power (CHP) applications [1]. In these applications, integrated active desiccant rooftop units (IADR) with a waste heat-activated desiccant regeneration train could provide significant energy saving advantages over conventional systems. The IADR technology combines the strengths of an advanced direct expansion (DX) cooling or heating cycle, utilizing variable speed compressors and optimal control strategies, with the unique dehumidification capability offered by an active desiccant wheel. It can be applied as a dedicated outdoor air system handling 100% outdoor air, or as a total conditioning system, handling both outdoor air and space cooling or heating loads [2].

Figures 1 and 2 show a general view and schematic of the IADR unit installed at Oak Ridge National Laboratory (ORNL). The vapor compression cycle of the unit uses R-22 refrigerant. Outdoor air enters the system at point "A", where it is mixed with return air from the laboratory building (point "B"), combining to produce the total air flow that enters the DX coil. The ratio of outdoor-to-total air flow is controlled by outdoor air and return air dampers. In the cooling mode of operation a portion of the cool saturated air leaving the DX coil passes through the active desiccant wheel where it is dried to a very low dew-point, and warmed by the latent heat of vaporization from water adsorbed onto the desiccant wheel surface. The remaining portion of the air cooled by the DX coil is bypassed around the desiccant wheel through a bypass damper. Mixing of warm, very dry air after the wheel with the cool, moderately dry bypass air leaving the DX coil provides supply air at the temperature and humidity condition required by the space. The conditioned supply air is delivered to the laboratory building via perforated ducting systems (Figure 3).

Outdoor air also enters the unit at point "C" (Figure 2) for desiccant regeneration. This air is heated either by a modulating natural gas-fired (NG) burner or by a hot water coil. Upon regeneration of the active desiccant wheel (DW), the regeneration air (RGA) is exhausted from the unit to the atmosphere.

Figure 1. General View of the IADR Unit at ORNL Site

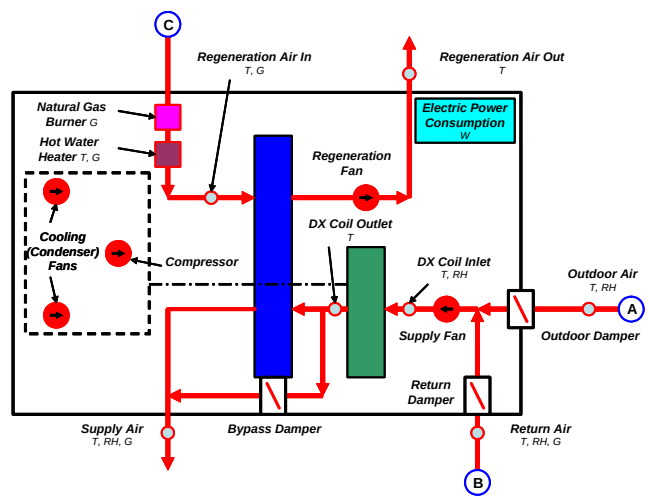

Figure 2. Schematic Diagram of the IADR Unit

Figure 3. View of Air Supply Duct inside the Laboratory Building

Copyright © 2006 by ASME

The IADR unit and CHP system components are fully instrumented in order to monitor and calculate various parameters used in evaluation of baseline performance of the system. The data collection, analysis, and storage are performed with an internet-based web control system [3]. The major test instrumentation and sensor measurement accuracies used for this analysis are given in Table 1.

Table 1. The Major Test Instrumentation and Measurement Accuracies

Measurement	Sensor	Range	Accuracy
Temperature	Thermistor	-67 to 302 °F	± 0.2 °F (32 to 158 °F)
	Resistive temperature detector	-328 to 1,562 °F	± 3.2 °F
Relative Humidity	Humidity sensor	10 to 90 % RH at 14 to 140 °F	± 3% RH
Air flow	Piezo ring pressure transducer	0 to 3,600 cfm	± 5%
Natural gas flow	High-precision Coriolis mass flow meter	0 to 5 lb/h	±2.0%
Electric power	Watt transducer	0 to 20 kW	±0.5% of ful scale

The aim of this study was to compare the efficiency of the IADR operation in baseline mode, when the regeneration stream of the IADR unit is heated by the natural gas burner (Figure 4), and in CHP mode, when the regeneration stream is heated by the hot water circulating in hot water coil installed upstream of the desiccant wheel in the regeneration duct. The hot water is produced in the heat recovery unit (HRU) driven by exhaust gas from the microturbine (MTG) (Figures 5 and 6).

The figures also show electric energy flows generated by MTG or supplied from the grid, and used by HRU and IADR units. Letter "x" indicates the number of IADR units used for different simulation cases. Figure 5 represents the case when electrical energy generated by MTG is greater than the total electrical parasitics consumed by HRU and IADR unit, and there is a net electric power output. Figure 6 applies to the case when electrical energy generated by MTG is lower than the total electrical parasitics consumed by HRU and IADR unit, and there is a need to use the grid for the difference.

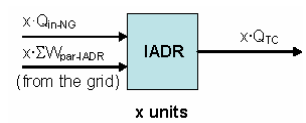

Figure 4. Baseline (Regeneration Air Heated by Natural Gas) Case of IADR Unit(s)

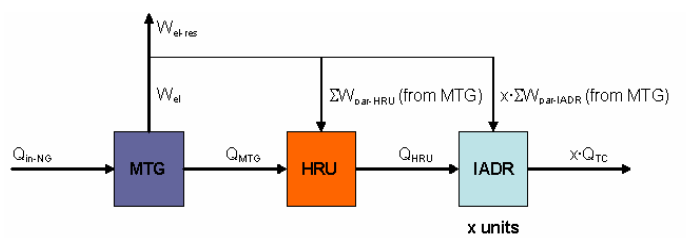

Figure 5. CHP (Regeneration Air Heated by Hot Water) Case of IADR Unit(s) ($W_{el} > \Sigma W_{par}$)

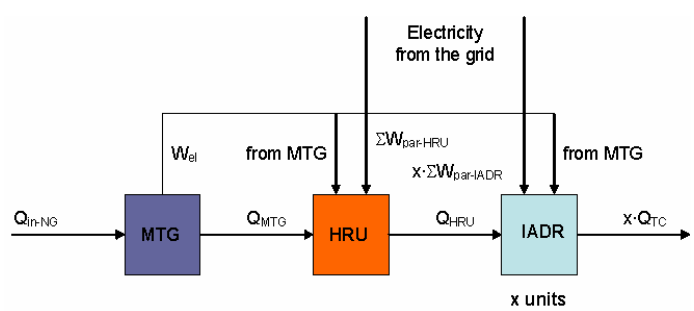

Figure 6. CHP (Regeneration Air Heated by Hot Water) Case of IADR Unit(s) ($W_{el} < \Sigma W_{par}$)

CALCULATION OF EFFICIENCY

There are alternative methods to define CHP efficiencies and effectiveness that result in significantly different values. Each has certain advantages and disadvantages, and the selection of one over another is usually project-dependent [4-7]. In this study, the efficiency calculations are determined at the source instead of the site assuming average grid efficiency of 32%. Hereinafter all electrical power is converted to thermal power using conversion factor of 3.412 (Btu/h)/kW.

NG Mode Efficiency:

$$E = \frac{x \cdot Q_{TC}}{x \cdot Q_{in-NG} + x \cdot \Sigma W_{par-SEMCO} \cdot (100/32)} \quad (1)$$

Copyright © 2006 by ASME

Waste-Heat Mode Efficiency:
when $\Sigma W_{par} < W_{el}$:

$$E = \frac{x \cdot Q_{TC} + (W_{el} - x \cdot W_{par-SEMCO} - W_{par-HRU})}{Q_{in-NG}} \quad (2)$$

when $\Sigma W_{par} > W_{el}$

$$E = \frac{x \cdot Q_{TC}}{Q_{in-NG} + (x \cdot W_{par-SEMCO} + W_{par-HRU} - W_{el}) \cdot (100/32)} \quad (3)$$

DISCUSSION OF RESULTS

The study was performed at 85°F outdoor temperature and compressor speed of 30 Hz (half of maximum speed of 60 Hz). In order to get maximum performance of the DW, the dry-bulb temperature and humidity setpoints inside the building was kept very low. This provided continuous operation of the compressor and saturation conditions at the DX coil outlet.

Table 2 gives major performance parameters of IADR at comparable conditions during NG-based and waste-heat modes of operation. Here the efficiencies are presented also. It can be seen that for the NG-based operation the efficiency is much higher compared to the waste-heat operation. One of the major contributing factors to such a difference is highly inefficient use of the thermal energy associated with the hot water generated in HRU: approximately 65% of the available heat was used in IADR unit to heat regeneration air (39.5 kBtu/h vs. 60.9 kBtu/h). It should be noted that the available heat on the HRU side is approximately 95.0 kBtu/h [8] which is approximately 36% higher than the available heat on the IADR side due to thermal losses between HRU and IADR unit. By minimizing these losses, the fuel utilization could be improved significantly.

The next step was to simulate operation of the system with several IADR units; the maximum number of units is determined by the potential heat recovery from HRU. The simulation was performed with spreadsheet-based models. Thermal losses between HRU and IADR were assumed to be negligible. In this particular case, having 39.5 kBtu/h waste heat demand per IADR unit to achieve 32.3 kBtu/h of DW latent capacity, up to two IADR units could be operated. The results are shown in Table 3 and Figure 7.

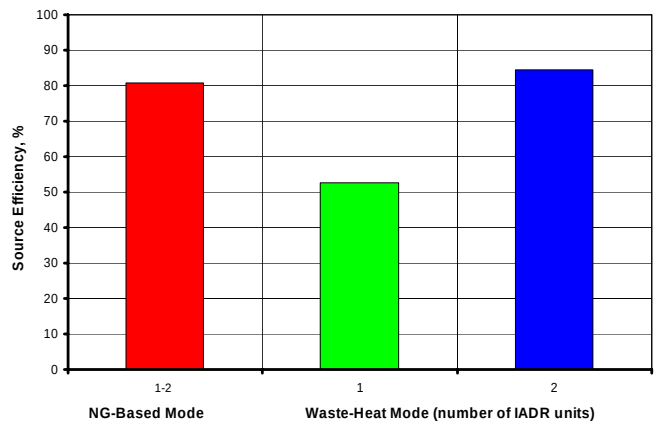

Figure 7. Comparison of NG-Based and Waste-Heat Efficiencies versus number of IADR Units at MTG W_{el} 12.2 kW

Table 2. Major Performance Parameters and Efficiencies during NG-Based and Waste-Heat DW Operation at MTG W_{el} 12.2 kW (One IADR Unit)

Parameter	Dimensions	NG-Based	Waste-Heat
Total (Latent + Sensible) Capacity	kBtu/h	108.1	110.7
Regeneration Temperature	°F	195.1	194.5
MTG Electric Power Output	kW (kBtu/h)	-	12.2 (41.6)
Natural Gas Input (HHV)	kBtu/h	60.5	240.8
Potential for Heat Recovery at Given MTG W_{el}	kBtu/h	-	~95.0
Heat Recovered by HRU	kBtu/h	-	60.9
Heat Consumed by IADR	kBtu/h	-	39.5
Percentage of Available Heat Used by IADR	%	-	64.9
IADR Electric Consumption	kW (kBtu/h)	6.9 (23.5)	6.7 (22.9)
HRU Electric Consumption	kW (kBtu/h)	-	0.7 (2.4)
Efficiency	%	80.7	52.7
Residual Electric Power Output	kW	-	4.8

Copyright © 2006 by ASME

Table 3. Major Performance Parameters and Efficiencies during NG-Based and Waste-Heat DW Operation at MTG W_{el} 12.2 kW (Two IADR Units)

Parameter	Dimensions	NG-Based	Waste-Heat
Total (Latent + Sensible) Capacity	kBtu/h	216.2	221.4
MTG Electric Power Output	kW (kBtu/h)	-	12.2 (41.6)
Natural Gas Input (HHV)	kBtu/h	121.0	240.8
IADR Electric Consumption	kW (kBtu/h)	13.8 (47.0)	13.4 (45.8)
HRU Electric Consumption	kW (kBtu/h)	-	0.7 (2.4)
Efficiency	%	80.7	84.6

The results show that while the system efficiency of the NG-based operation does not change with increasing number of IADR units, the efficiency of the waste-heat operation improves significantly with increasing number of IADR units (more efficient use of the available thermal energy). This efficiency was found to be 84.6% which exceeds the NG-based mode efficiency of 80.7%.

To study the effect of the improved electrical efficiency of the MTG, the next simulation case was with the MTG operating at higher electric power output of 20 kW. Previous tests show that under these conditions and at comparable ambient temperatures (approximately 85°F) the $Q_{in\text{-}NG}$ is approximately 360 kBtu/h, and potential for heat recovery is approximately 120-125 kBtu/h [9]. In this case it is possible to operate up to three IADR units. Since it is not practical to consider cases with one IADR unit, the arrangements including two and three IADR units was evaluated. The results are shown in Tables 4 and 5, and Figure 8.

Table 4. Major Performance Parameters and Efficiencies during NG-Based and Waste-Heat DW Operation at MTG W_{el} 20 kW (Two IADR Units)

Parameter	Dimensions	NG-Based	Waste-Heat
Total (Latent + Sensible) Capacity	kBtu/h	216.2	221.4
MTG Electric Power Output	kW (kBtu/h)	-	20.0 (68.2)
Natural Gas Input (HHV)	kBtu/h	121.0	360.0
IADR Electric Consumption	kW (kBtu/h)	13.8 (47.0)	13.4 (45.8)
HRU Electric Consumption	kW (kBtu/h)	-	0.7 (2.4)
Efficiency	%	80.7	66.4
Residual Electric Power Output	kW	-	5.9

Table 5. Major Performance Parameters and Efficiencies during NG-Based and Waste-Heat DW Operation at MTG W_{el} 20 kW (Three IADR Units)

Parameter	Dimensions	NG-Based	Waste-Heat
Total (Latent + Sensible) Capacity	kBtu/h	324.3	332.1
MTG Electric Power Output	kW (kBtu/h)	-	20.0 (68.2)
Natural Gas Input (HHV)	kBtu/h	181.5	360.0
IADR Electric Consumption	kW (kBtu/h)	20.7 (70.5)	20.1 (68.7)
HRU Electric Consumption	kW (kBtu/h)	-	0.7 (2.4)
Efficiency	%	80.7	91.5

Copyright © 2006 by ASME

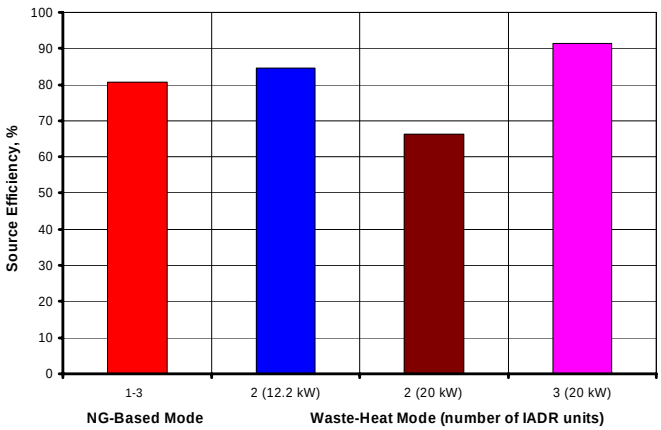

Figure 8. Comparison of NG-Based and Waste-Heat Efficiencies versus Number of IADR Units at MTG W_{el} 12.2 kW and 20 kW

These data show that with two participating IADR units at MTG power output of 20 kW in the waste-heat mode, the source efficiency is lower than that of the NG-based mode by 14.3%, and with three IADR units, when the use of thermal energy increases, the source efficiency in the waste-heat mode exceeds that of the NG-based mode by 9.3%. The importance of the maximum use of the available thermal energy for heating regeneration air is evident from Figure 8, when for similar arrangements with two IADR units, the efficiencies at MTG power output of 12.2 kW (with better use of the thermal energy) are higher that those at MTG power output of 20 kW (when the thermal energy is not fully used).

It should be noted that higher MTG power output (>20 kW) was not considered for this particular CHP arrangement because during hot and humid ambient conditions typical for the DW activation (approximately 85°F), the actual MTG electrical power output is only around 22-23 kW.

CONCLUSIONS

Comparative analysis of the performance data of the IADR unit in two operation modes: NG-based and waste-heat shows better fuel utilization with CHP system by optimum use of the available thermal energy for heating the regeneration air. It is very important to minimize all possible thermal losses on the hot water and the exhaust gas sides in a CHP system. Although existing CHP arrangement with one IADR unit did not show an improvement in efficiency compared to the NG-based mode of operation, the analysis shows that there is a great potential for improvement by maximizing the use of the available thermal heat with 2 or more IADR units.

ACKNOWLEDGMENTS

The authors would like to thank the Office of Energy Efficiency and Renewable Energy, U.S. Department of Energy (DOE), for supporting this work. This research was also supported in part by an appointment to the Oak Ridge National Laboratory (ORNL) Postdoctoral Research Associates Program administered jointly by the Oak Ridge Institute for Science and Education and ORNL.

REFERENCES

[1] Jalalzadeh, A.A., Slayzak, S., Judkoff, R., Schaffhauser, T., and DeBlasio, R., 2005, “Performance Assessment of a Desiccant Cooling System in a CHP Application Incorporating an IC Engine,” Int. Journal of Distributed Energy Resources, 1 (2), pp. 163-184.

[2] Petrov, A.Y., Sand, J.R., Zaltash, A., Fischer, J., Mitchell, R., and Wetherington, J.R., 2005, “Performance Analysis of Integrated Active Desiccant Rooftop Air-Conditioning System Operating in Heating Mode,” IMECE2005-79238, Proc. 2005 ASME International Mechanical Engineering Congress and Exposition, Orlando, FL.

[3] Automated Logic Corporation, 2005, Kennesaw, GA.

[4] Peltier, R. V., 2001, “Cogeneration: How Efficient is “Efficiency”?” Power, No. 3-4, pp 105-108.

[5] Association of State Energy Research and Technology Transfer Institutions, 2004, “Distributed Generation Combined Heat and Power Long Term Monitoring Protocols,” October 29, 2004

[6] Association of State Energy Research and Technology Transfer Institutions, 2004, “Distributed Generation Combined Heat and Power Laboratory Testing Protocol,” October 29, 2004.

[7] Petrov, A.Y., Zaltash, A., Labinov, S.D., Rizy, D.T., Liao, X., and Redermacher, R., 2004, “Evaluation of Different Efficiency Concepts of an Integrated Energy System (IES),” Proc. 2004 ASME International Mechanical Engineering Congress and Exposition, Anaheim, CA.

[8] Rizy, D.T., Zaltash, A., Labinov, S.D., Petrov, A.Y,, Vineyard, E.A., and Linkous, R.L., 2003, “CHP Integration (or IES): Maximizing the Efficiency of Distributed Generation with Waste Heat Recovery,” Proc. Power System 2003 Conference “Distributed Generation and Advance Metering”, Clemson, SC, USA.

[9] Petrov, A.Y., Zaltash, A., Labinov, S.D., Rizy, D.T., and Linkous, R.L., 2005, “Dynamic Performance of a 30-kW Microturbine-Based CHP System,” OR-05-9-3, ASHRAE Transactions, 3 (1).

Copyright © 2006 by ASME