ORNL/Sub/90-89673

ornl

OAK RIDGE NATIONAL LABORATORY

MARTIN MARIETTA

COMPUTER MODEL FOR SIMULATION OF ABSORPTION SYSTEMS IN FLEXIBLE AND MODULAR FORM

Gershon Grossman
Khaled Gommed
Doron Gadoth

Prepared by the
OAK RIDGE NATIONAL LABORATORY
Oak Ridge, Tennessee 37831-6285
managed by
MARTIN MARIETTA ENERGY SYSTEMS, INC.
for the
U.S. DEPARTMENT OF ENERGY
under contract DE-AC05-84OR21400

MANAGED BY
MARTIN MARIETTA ENERGY SYSTEMS, INC.
FOR THE UNITED STATES
DEPARTMENT OF ENERGY

ORNL/Sub/90-89673

A COMPUTER MODEL FOR SIMULATION OF ABSORPTION SYSTEMS IN FLEXIBLE AND MODULAR FORM

Gershon Grossman, Khaled Gommed, and Doron Gadoth, authors
Faculty of Mechanical Engineering
Technion—Israel Institute of Technology
Haifa, Israel

DATE PUBLISHED: AUGUST 1991

Prepared for the
OAK RIDGE NATIONAL LABORATORY
Oak Ridge, Tennessee 37831
managed by
MARTIN MARIETTA ENERGY SYSTEMS, INC.
for the
U.S. DEPARTMENT OF ENERGY
under Contract No. DE-AC05-84OR21400

CONTENTS

LIST OF FIGURES v

LIST OF TABLES vii

ABBREVIATIONS, ACRONYMS, AND INITIALISMS ix

ACKNOWLEDGMENTS xi

SUMMARY xiii

ABSTRACT xv

1. INTRODUCTION 1

2. PROGRAM STRUCTURE 3

3. INPUT AND OUTPUT 7
   - 3.1 THE INPUT DATA 7
   - 3.2 THE OUTPUT 12

4. THE MAIN PROGRAM 19

5. UNIT SUBROUTINES AND GOVERNING EQUATIONS 21
   - 5.1 ABSORBER (SUBROUTINE ABSORB) 23
   - 5.2 DESORBER (SUBROUTINE DESORB) 25
   - 5.3 COUNTERFLOW HEAT EXCHANGER (SUBROUTINE HEX) 26
   - 5.4 CONDENSER (SUBROUTINE COND) 27
   - 5.5 EVAPORATOR (SUBROUTINE EVAP) 28
   - 5.6 VALVE (SUBROUTINE VALVE) 29
   - 5.7 MIXER (SUBROUTINE MIX) 30
   - 5.8 SPLITTER (SUBROUTINE SPLIT) 30
   - 5.9 RECTIFIER (SUBROUTINE RECT) 30

6. MATERIAL PROPERTIES 33
   - 6.1 LiBr-H_2O SOLUTION (CODE 1) 35
   - 6.2 H_2O-NH_3 SOLUTION AND VAPOR (CODE 2) 35
   - 6.3 H_2O LIQUID AND VAPOR (CODE 3) 36
   - 6.4 LiBr-H_2O-NH_3 SOLUTION (CODE 4) 36
   - 6.5 LiBr/$ZnBr_2$-CH_3OH SOLUTION (CODE 5) 37
   - 6.6 CH_3OH LIQUID AND VAPOR (CODE 6) 37
   - 6.7 $LiNO_3$/KNO_3/$NaNO_3$-H_2O SOLUTION (CODE 7) 37

7. THE SOLVER 39

8. RESULTS AND VALIDATION 41

9. CONCLUSIONS 43

10. REFERENCES 45

APPENDIX A: MATERIAL PROPERTIES 47

APPENDIX B: RESULTS OF CALCULATIONS 61

APPENDIX C: USERS' MANUAL.....87

LIST OF FIGURES

Fig. 1. Program structure 4
Fig. 2. Schematic representation of a single-stage LiBr-H_2O chiller 8
Fig. 3. Schematic description of individual units forming absorption systems 11
Fig. 4. Illustration of the two possibilities for temperature variations in counterflow heat exchange 22
Fig. 5. Structure of the property data base 34
Fig. B.1. Single stage heat transformer 62
Fig. B.2. Single stage chiller/heat pump 71
Fig. B.3. Single stage chiller with rectifier 76
Fig. B.4. Double stage heat transformer 79
Fig. B.5. Double effect chiller 83

LIST OF TABLES

Table 1. Data file for a single stage chiller LiBr-H_2O cycle 9
Table 2. Sample output file for a single stage chiller LiBr-H_2O cycle, with *MSGLVL* = 0 13
Table 3. Sample output file for a single stage chiller LiBr-H_2O cycle, with *MSGLVL* = 100 15
Table 4. Materials presently contained in the property data base 35
Table B.1. Data for a single stage heat transformer LiBr-H_2O cycle 63
Table B.2. Data for a single stage heat transformer NH_3-LiBr/H_2O cycle 65
Table B.3. Data for a single stage heat transformer LiBr/$ZnBr_2$-CH_3OH cycle 67
Table B.4. Data for a single stage heat transformer NH_3-H_2O cycle 69
Table B.5. Data for a single stage chiller NH_3-LiBr/H_2O cycle 72
Table B.6. Data for a single stage chiller LiBr/$ZnBr_2$-CH_3OH cycle 74
Table B.7. Data for a single stage chiller NH_3-H_2O cycle with a rectifier 77
Table B.8. Data for a double stage heat transformer LiBr-H_2O cycle 80
Table B.9. Data for a double stage chiller LiBr-H_2O cycle 84

ABBREVIATIONS, ACRONYMS, AND INITIALISMS

A	heat transfer area (ft^2 or m^2)
C	absorbent/absorbate concentration (weight percent)
CAT	user-supplied value of the closest approached temperature (°F or °C)
CAT	calculated value of the closest approach temperature
DEV	extent of deviation from equilibrium state (°F or °C)
E	equilibrium
EFF	user-supplied value of heat transfer effectiveness (dimensionless)
EFF	calculated value of heat transfer effectiveness
F	mass flow rate (lb/min or kg/s)
FTOL	user-supplied tolerance for functions
h	specific enthalpy (Btu/lb or kJ/kg)
i	a state point index
IPINCH	integer index indicating location of temperature pinch
j	a state point index
l	a state point index
LMTD	user-supplied value of logarithmic mean temperature difference (°F or °C)
LMTD	calculated value of logarithmic mean temperature difference
MSGLVL	output message level code
P	pressure (psia or kPa)
PTX	vapor pressure, temperature, and concentration
Q	heat transfer rate (Btu/min or kW)
T	temperature (°F or °C)
U	overall heat transfer coefficient [Btu/(ft^2 × °F × s) or kW/m^2 × °C]
v	vapor
w	mass vapor fraction (dimensionless)
XTOL	user-supplied tolerance for variables

ACKNOWLEDGMENTS

The authors would like to thank W. J. Biermann, R. C. DeVault, and H. Perez-Blanco for many useful suggestions. The project was sponsored by Oak Ridge National Laboratory for the U.S. Department of Energy under contract No. 19X-89673V.

SUMMARY

Absorption heat pumps, first developed in the 19th century, have received growing attention in the past two decades. The increasing cost of electricity has made the particular features of this heat-powered cycle attractive for both residential and industrial applications. Solar-powered absorption chillers, gas-fired domestic heat pumps, and waste-heat-powered industrial temperature boosters are a few of the applications.

The development of working absorption systems has created a need for reliable and effective system simulations. Several system-specific computer models have been developed that have proven to be very valuable tools for research and development and for design optimization. The models were, however, limited to the particular system for which they were created.

The objective of the present work has been to develop a modular computer simulation code capable of simulating absorption heat pumps in different cycle configurations and with different working fluids. The usefulness of such a code has become apparent during repeated attempts under absorption research programs to evaluate new ideas for absorption cycles and working substances and to compare them with existing ones.

Because each absorption system consists of a number of standard components (e.g., absorber, condenser, etc.), the code has been structured around unit subroutines, each of which contains the governing equations for the particular component. These subroutines are activated by a main program, which interprets the user input, calls the units, and links them in an order corresponding to the user's specification to form the complete system. Each unit subroutine, when activated, addresses a property data base for the thermodynamic properties of the working fluids. The equations generated by the unit subroutines are solved simultaneously.

The code is user oriented and requires a relatively simple input: the given operating conditions and the working fluid at each state point. The user conveys to the computer an image of his cycle by specifying the different subunits and their interconnections. Based on this information, the program calculates (1) the temperature, flow rate, concentration, pressure, and vapor fraction at each state point in the system and (2) the heat duty at each unit, from which the coefficient of performance can be determined.

The program has been used successfully to simulate a variety of single-stage, double-stage, and dual-loop heat pumps and heat transformers, using the working fluids $LiBr\text{-}H_2O$, $H_2O\text{-}NH_3$, $LiBr/H_2O\text{-}NH_3$, $LiBr/ZnBr_2\text{-}CH_3OH$, and $LiNO_3/KNO_3/NaNO_3\text{-}H_2O$.

ABSTRACT

A computer code in a flexible and modular form developed for simulation of absorption systems makes it possible to investigate various cycle configurations with different working fluids. The code is based on unit subroutines containing the governing equations for the system's components. The equations are linked by a main program according to the user's specifications to form the complete system. The equations are solved simultaneously, and fluid properties are taken from a property data base.

The code is user oriented and requires a relatively simple input containing the given operating conditions and the working fluid at each state point. The user conveys to the computer an image of his or her cycle by specifying the different subunits and their interconnection. Based on this information, the program calculates (1) the temperature, flow rate, concentration, pressure, and vapor fraction at each state point in the system and (2) the heat duty at each unit, from which the coefficient of performance may be determined.

The program has been used successfully to simulate a variety of single-stage, double-stage, and dual-loop heat pumps and heat transformers, with the working fluids LiBr-H_2O, H_2O-NH_3, LiBr/H_2O-NH_3, LiBr/$ZnBr_2$-CH_3OH, and more.

1. INTRODUCTION

The need for computer simulation models of absorption systems has become apparent because of renewed interest in these systems during the past two decades. The advantage of the absorption cycle has been recognized for heat pumping applications for which heat may be utilized as a source of power in preference over mechanical energy. Thus, absorption heat pumps that utilize waste or solar low-grade heat have emerged alongside gas- and steam-fired systems for residential, commercial, and industrial applications. A variety of advanced cycles in multistage configurations have been proposed to fully utilize the thermodynamic potential of the heat source at hand. The development of working systems based on these cycles and the desire to investigate novel cycles and working fluids created the need for effective and reliable simulation.

Several computer simulation codes of absorption systems have been developed and described in the literature [1–6]. The results of some of them have been compared with experimental data and found to agree. The codes were all system specific; that is, they were written to simulate one particular system with a particular design, flow arrangement, and working material. Their structure did not allow the ease of modification needed to model other systems. To modify the structure, major parts of the program (especially the iterative sequence) would have to be rewritten.

The objective of the present work has been to develop a flexible computer simulation code capable of simulating absorption systems in varying cycle configurations and with different working fluids. The need for such a code grew out of repeated attempts to evaluate new ideas for advanced cycles and working substances and to compare them with existing ones. An earlier paper [7] described the modular approach taken to achieve this goal and described the early results with three cycle configurations and two working fluids.

This report describes the present status of the code with a considerably extended user-oriented simulation capability and applicability. As will be shown, the code may be used not only to evaluate new cycles and working fluids but also to investigate a system's behavior in off-design conditions, to analyze experimental data, and to perform preliminary design optimization.

2. PROGRAM STRUCTURE

The objective of developing a flexible and user-oriented simulation code has led to two basic requirements with respect to the program structure. First, the program had to be modular to enable the user to specify different cycle configurations, different working fluids, and obviously different unit sizes and operating conditions. Second, the input requirements had to be simple and straightforward.

Because each absorption system consists of a number of standard components (e.g., absorber, evaporator, desorber, condenser, etc.), the following logic was developed for the program. Each basic component is simulated by a unit subroutine that provides a mathematical expression of the physics of that component. Each unit subroutine contains all the physical equations required to fully describe its behavior, such as energy balance, conservation of mass for each material species, heat and mass transfer and thermodynamic equilibrium. The unit subroutine, when activated, addresses a property data base for the thermodynamic properties of the working fluids. This separation between the unit subroutines and property subroutines provides the flexibility for each unit to operate with different working fluids. The main program calls the unit subroutines and links them in a form corresponding to the user's specification. Each call to a unit subroutine is equivalent to collecting all the equations associated with it, without attempting to solve them as yet. When the calls to all the unit subroutines have been completed, and all the equations have been established, a mathematical solver routine is employed to solve the set of nonlinear equations simultaneously.

Figure 1 is a schematic description of the program architecture. The user input conveys to the program an "image" of the cycle to be simulated: the number and types of units contained in it; their interconnections; and size or transfer characteristics, where applicable. The input must also contain the values of the parameters set fixed by the user (e.g., temperatures, flow rates, etc.) at specific state points. The main program interprets the user input and creates a variable vector that contains all the independent unknown quantities. It then calls the unit subroutines, thereby establishing the system's governing equations. The unit subroutines refer to the property data base as illustrated. All the equations and variables are normalized to be brought to the same order of magnitude. The solver package is then activated, and the values of the unknowns calculated to a user-specified accuracy. Recognizing that the set of nonlinear equations may have more than one mathematical solution, a set of constraints is applied to direct the solver toward the physically valid solution. The output contains (1) the temperature, enthalpy, flow rate, concentration, pressure, and vapor fraction at each of the cycle's state points and (2) the heat duty and transfer characteristics of each unit.

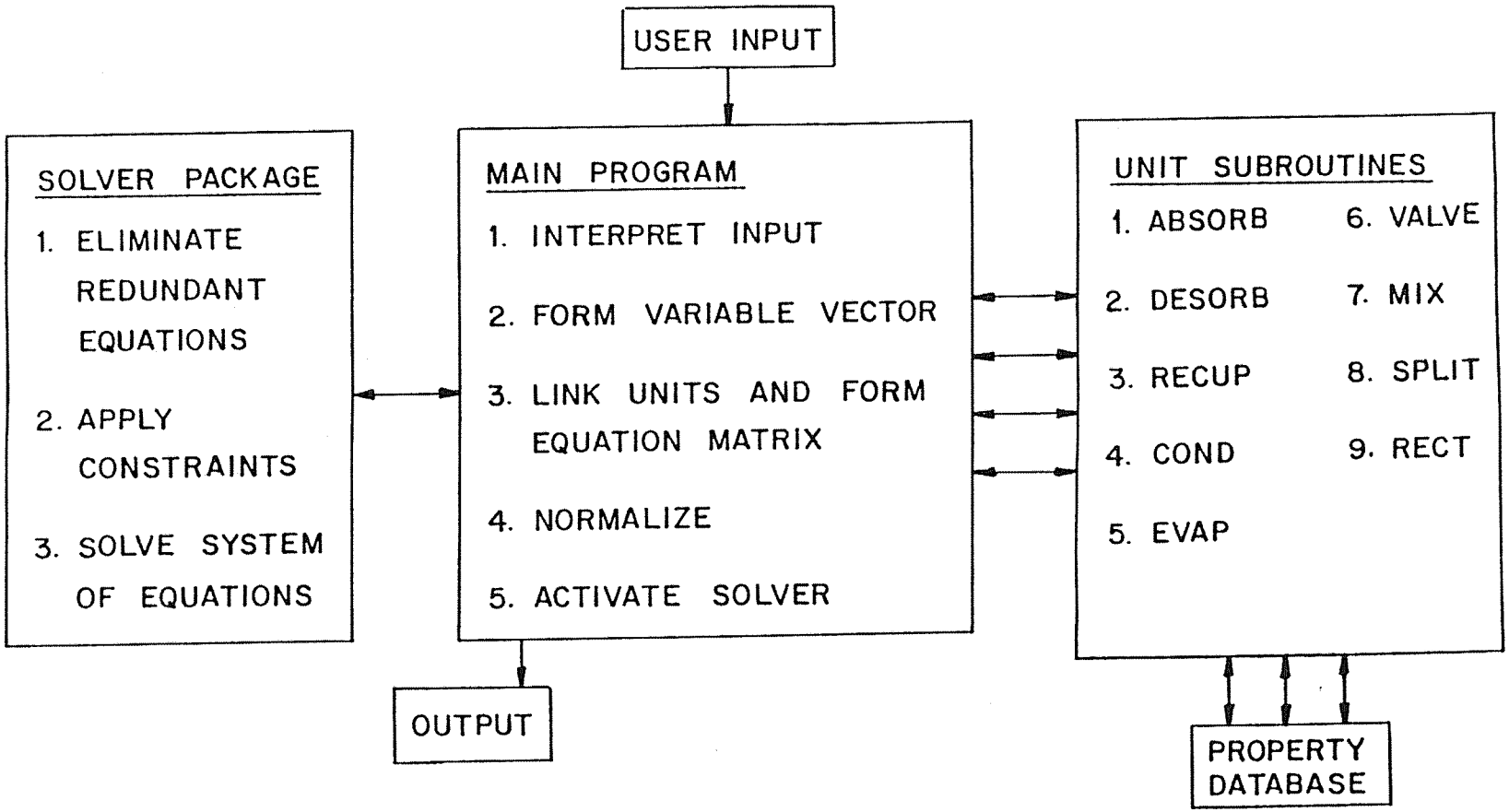

Figure 1. Program structure.

In developing the simulation code, the following tasks had to be attended to: (1) develop the program logic; (2) develop a mathematical simulation of the system's units, describing their physical behaviors; (3) obtain property data for the working fluids and develop a data structure; (4) adopt a method of solution and develop the solver package; (5) develop a user-friendly interface; (6) implement the above in an effective computer code; and (7) validate the model with experimental data.

Each of the program's parts mentioned above and illustrated in Fig. 1 will be described in detail and elaborated in the following chapters.

3. INPUT AND OUTPUT

As the program logic was being developed, as described in the previous chapter, the main program was assigned certain tasks (Fig. 1) to alleviate a great deal of the user's burden. Unlike most process simulators and flowsheeting programs commonly used by the chemical industry, the present program does not require the user to do any programming. Furthermore, since all the governing equations are solved simultaneously, the user does not have to specify an iterative sequence by which the program is to proceed through his cycle, which eliminates the need to worry about the order of the variables and parameters. This chapter describes the form of input and output to the code. The function of the main program will be described in the next chapter.

3.1 THE INPUT DATA

The user is first required to prepare a schematic diagram depicting the cycle to be simulated in terms of the basic nine units recognizable by the code (Fig. 1). A detailed description of these units and their governing equations is given in Sect. 5. The diagram should display schematically the system's breakdown into the basic units and their interconnections. We shall follow the example in Fig. 2, which shows a single-stage, LiBr-H_2O absorption chiller consisting of an absorber, a desorber, an evaporator, a condenser, a heat exchanger, and a valve. The user is required to label each state point and each unit, in an arbitrary order. In Fig. 2, numbers in a circle have been used for units, and numbers with no circle indicate state points. Then, the user prepares an input data file, as described next. The example data file for the cycle in Fig. 2 is given in Table 1. Further details on the preparation of input are given in the Users' Manual (Appendix C). The input consists of the following three parts:

- *General Preliminary Input* contains a user-supplied problem title [first card (see line one in Table 1)], scaling parameters for normalization [second card (see line two in Table 1)], array sizes, and convergence criteria [third card (see line three in Table 1)]. Default options are available for all the above. The code can operate either in SI or British units, as indicated by a flag on the third card. On the fourth card (see line four in Table 1) the user lists the total number of units and state points for the problem (6 and 20, respectively, for the present example).

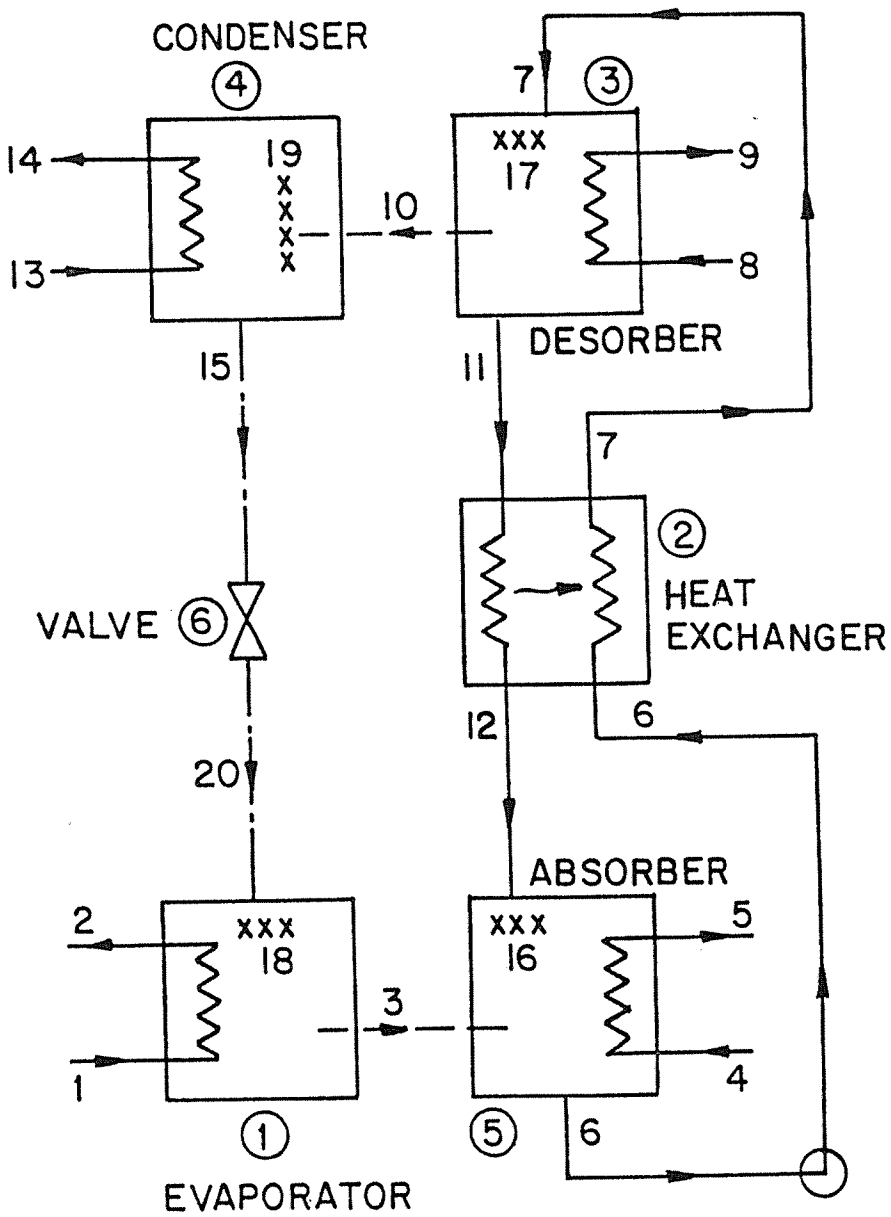

Figure 2. Schematic representation of a single-stage LiBr-H_2O chiller.

Table 1. Data file for a single stage chiller LiBr-H_2O cycle (See Fig. 2.)

```
SINGLE STAGE CHILLER LIBR-H2O
    180.0        50.0       405.0         5.0
 500     0     1    1.0D-06    1.0D-09
  6   20
   1     5     1  562.1000    -1      0.0000
 20    3    1    2   18
   2     3     2     0.7200     0      0.0000
  6    7   11   12
   3     2     4     9.9379    -1      0.0000
  7   10    8    9   11   17
   4     4     3     2.5000     1      0.0000
 10   15   13   14   19
   5     1     2     0.9183     1     -2.0000
 12    3    4    5    6   16
   6     6
 15   20
   1     3    0    55.    0 402.1    0      0.    0    0.0    0      0.
   2     3    1    60.    0 402.1    0      0.    0    0.0    0      0.
   3     3    3    60.    3   3.7    0      0.    3    1.0    0      1.
   4     3    0    85.    0  59.3    0      0.    0    0.0    0      0.
   5     3    1    60.    0  59.3    0      0.    0    0.0    0      0.
   6     1    1    60.    0  23.7    3     45.    3    1.0    0      0.
   7     1    1    60.    0  23.7    3     45.    2    3.0    0      0.
   8     3    0   180.    0 118.6    0      0.    0    0.0    0      0.
   9     3    1    60.    0 118.6    0      0.    0    0.0    0      0.
  10     3    2    60.    3   3.7    0      0.    2    3.0    0      1.
  11     1    2    60.    2  20.     2     55.    2    3.0    0      0.
  12     1    1    60.    2  20.     2     55.    3    1.0    0      0.
  13     3    0    85.    0 256.2    0      0.    0    0.0    0      0.
  14     3    1    60.    0 256.2    0      0.    0    0.0    0      0.
  15     3    4    60.    3   3.7    0      0.    2    3.0    0      0.
  16     1    1    60.    0   0.     1     54.    3    1.0    0      0.
  17     1    1    60.    0   0.     1     46.    2    3.0    0      0.
  18     3    3    60.    3   3.7    0      0.    3    1.0    2    0.1
  19     3    4    60.    3   3.7    0      0.    2    3.0    0      1.
  20     3    3    60.    3   3.7    0      0.    3    1.0    2    0.1
```

- *Unit Input* consists of two cards for each of the units in the cycle. The first card shows the unit number, type, and heat and mass transfer characteristics. The second card lists its state point numbers in the schematic diagram in an order corresponding to that of the unit subroutine. Thus, for example, unit 1 in Fig. 2 is listed in the input as type 5, which the program recognizes as an evaporator; its state point numbers are 20,3,1,2,18, corresponding to 1,2,3,4,5 in subroutine EVAP contained in the code (Fig. 3).

  Heat transfer characteristics of a unit may be specified by one of four methods. The user can supply either the *UA* (overall heat transfer coefficient times area), the effectiveness, the *CAT* (closest approach temperature), or the *LMTD* (logarithmic mean temperature difference). A flag (1 through 4) ahead of the applicable quantity on the first card indicates which of the four methods has been chosen for the particular unit. Thus, for the example in Table 1, unit 1 (evaporator) has been characterized by a *UA* of 662.1 Btu/(hr - °F); unit 2 (heat exchanger), by an effectiveness of 0.72; and unit 4 (condenser), by a *CAT* of 2.5°F. The next integer flag indicates the location of the temperature pinch: -1 when at the cold end, +1 when at the hot end. In the example of Table 1, the pinch for unit 1 is at the cold end; that is, between state points 2 and 18. By setting *IPINCH* = 0 the user lets the code decide the location of the pinch. Further details are given in Sect. 5.

  Mass transfer characteristics of a unit are specified by a temperature deviation from equilibrium at the outlet (last number on the first card). In Table 1, the deviation from equilibrium at the solution outlet from unit 5 (absorber) is specified as -2.0°F.

- *State Point Input* consists of one card for each of the state points in the cycle. Each card lists the state point number, a code for the working fluid in it, and five pairs of numbers for the temperature, flow rate, concentration, vapor pressure, and vapor fraction in that state point. Each pair of numbers consists of an integer index and a real value. The former can be either zero or nonzero, indicating a fixed or variable quantity respectively. The latter gives a fixed value or an initial guess for the quantity in question. The same nonzero index greater-than unity given to the same variable quantity at two different state points indicates that those two, although unknown, have the same value. In the example in Table 1, state point 1 (chilled water inlet to the evaporator) has a fluid code 3 (for water), a fixed temperature of 55.0°F, a fixed flow rate of 402.1 lb/min, a fixed concentration of 0.0, a fixed vapor pressure of 0.0 (as a subcooled liquid), and a fixed vapor fraction of 0.0; state point 10 (vapor outlet from the desorber) has a fluid code 3 (for water), an unknown temperature with an initial guess of 60.0°F, an unknown flow rate

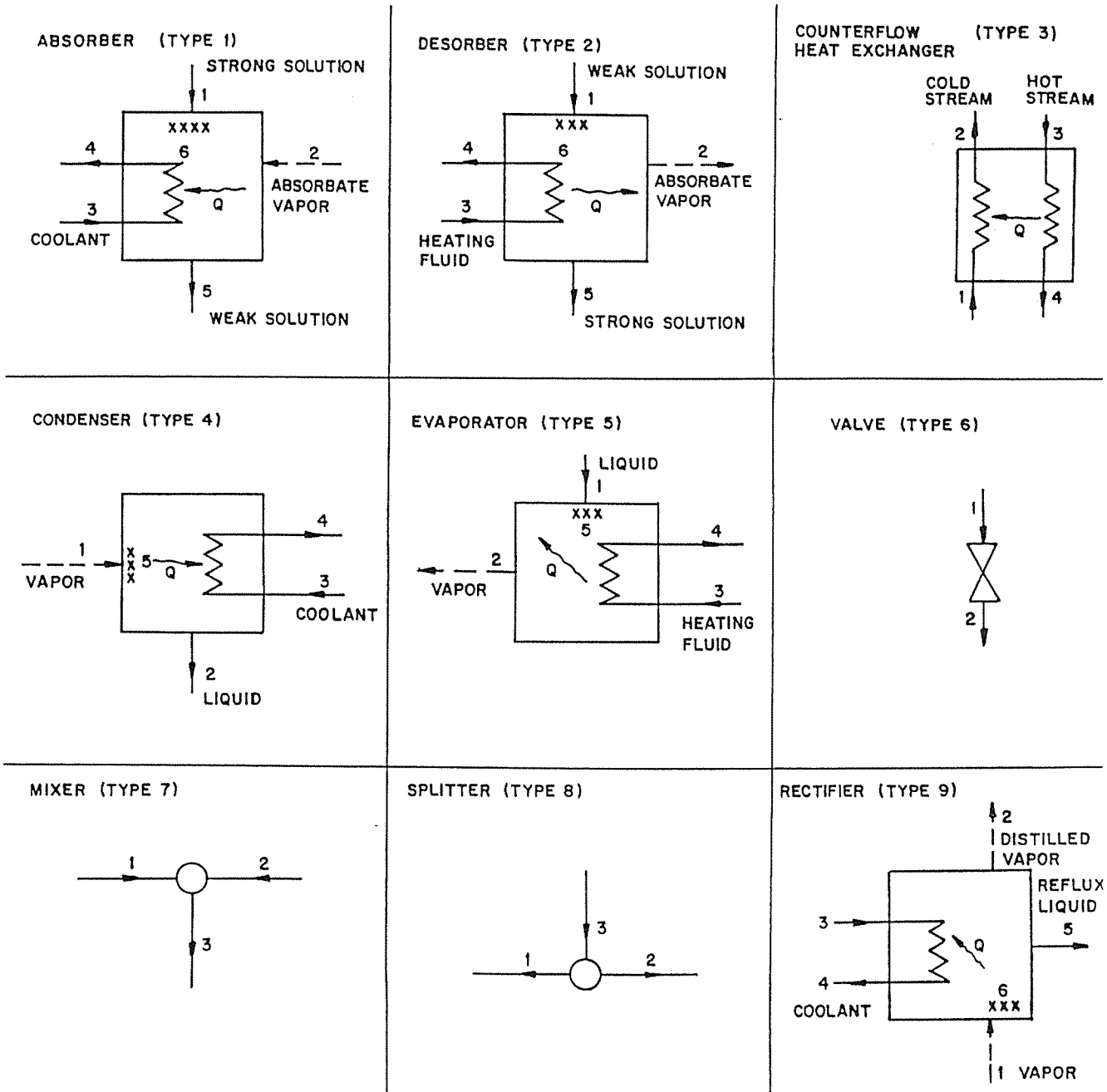

Figure 3. Schematic description of individual units forming absorption systems.

with an initial guess of 3.7 lb/min, a fixed concentration of 0.0, an unknown vapor pressure with an initial guess of 3.0 psia, and a fixed vapor fraction of 1.0.

By this form of input, the user has entered all necessary information about his cycle without having to program. By the unit input, the program is told which units are contained in the cycle, what their heat and mass transfer characteristics are, and how they are interconnected. By the state point input, the program is told which working fluids are used where and what the fixed and variable parameters of the problem are.

3.2 THE OUTPUT

The output structure is modular to give the user control over the extent of the information presented. The integer flag *MSGLVL* in the third card of the General Preliminary Input allows the user to specify how frequently values of the variables and equation residuals at intermediate iterations should be printed.

Table 2 shows a sample output file for the example in Fig. 2 and Table 1. This file was printed with *MSGLVL* = 0 and hence does not show any intermediate results. The initial section reproduces the input file as read by the program. This input-return enables the user to ascertain input errors by inspection. Next, the program prints the total number of iterations it took to converge and also a convergence code (IER) indicating whether the required tolerance has been achieved. The next section contains the values of the temperature, enthalpy, flow rate, concentration, pressure and vapor fraction at all state points. In the final section, the heat transfer characteristics and heat duty are given for each unit.

When *MSGLVL* > 0, additional information is printed. Table 3 describes a sample output file for the example in Fig. 2, with *MSGLVL* = 100. Following the initial section with the input return, preprocessed values of the temperatures at all state points are presented. These values have been reached by applying the constraints to the initial guesses for the temperatures to produce a feasible set-off point. Next is a printout of the total number of variables and equations and their respective types. The following section is, again, optional and consists of intermediate values of the physical quantities at all state points and also the equation residuals. This information is presented in a table; the printing frequency is set by the value of the integer flag *MSGLVL*. Finally, the values of all dimensionless variables and equation residuals upon convergence are printed following the convergence code.

Table 2. Sample ouput file for a single stage chiller LiBr-H_2O cycle, with *MSGLVL* = 0 (See Fig. 2.)

```
SINGLE STAGE CHILLER LIBR-H2O

 INPUT AND OUTPUT IN BRITISH UNITS

 THE BRITISH UNITS ARE :
 TEMPERATURES          (T)   IN  DEG F
 MASS FLOWS            (F)   IN  LB/MIN
 CONCENTRATION         (C)   IN  PERCENTS
 ENTHALPIES            (H)   IN  BTU/LB
 PRESSURES             (P)   IN  PSIA
 HEAT QUANTITIES       (Q)   IN  BTU/MIN

TOLERANCES IN F, X          1.0D-06       1.0D-09

NO. OF UNITS      6
NO. OF STATE POINTS     20

    1     5     1   662.1000    -1      0.0000
   20     3     1     2   18     0     0
    2     3     2       0.7200     0     0.0000
    6     7    11    12     0     0     0
    3     2     4       9.9379    -1     0.0000
    7    10     8     9    11    17     0
    4     4     3       2.5000     1     0.0000
   10    15    13    14    19     0     0
    5     1     2       0.9183     1    -2.0000
   12     3     4     5     6    16     0
    6     6     0       0.0000     0     0.0000
   15    20     0     0     0     0     0

STARTING POINTS
    1     3     0   55.0     0   402.10     0     0.0     0     0.0     0     0.0
    2     3     1   60.0     0   402.10     0     0.0     0     0.0     0     0.0
    3     3     3   60.0     3     3.70     0     0.0     3     1.0     0     1.0
    4     3     0   85.0     0    59.30     0     0.0     0     0.0     0     0.0
    5     3     1   60.0     0    59.30     0     0.0     0     0.0     0     0.0
    6     1     1   60.0     0    23.70     3    45.0     3     1.0     0     0.0
    7     1     1   60.0     0    23.70     3    45.0     2     3.0     0     0.0
    8     3     0  180.0     0   118.60     0     0.0     0     0.0     0     0.0
    9     3     1   60.0     0   118.60     0     0.0     0     0.0     0     0.0
   10     3     2   60.0     3     3.70     0     0.0     2     3.0     0     1.0
   11     1     2   60.0     2    20.00     2    55.0     2     3.0     0     0.0
   12     1     1   60.0     2    20.00     2    55.0     3     1.0     0     0.0
   13     3     0   85.0     0   256.20     0     0.0     0     0.0     0     0.0
   14     3     1   60.0     0   256.20     0     0.0     0     0.0     0     0.0
   15     3     4   60.0     3     3.70     0     0.0     2     3.0     0     0.0
   16     1     1   60.0     0     0.00     1    54.0     3     1.0     0     0.0
   17     1     1   60.0     0     0.00     1    46.0     2     3.0     0     0.0
   18     3     3   60.0     3     3.70     0     0.0     3     1.0     2     0.1
   19     3     4   60.0     3     3.70     0     0.0     2     3.0     0     1.0
   20     3     3   60.0     3     3.70     0     0.0     3     1.0     2     0.1
```

Table 2. (continued)

```
 LAST ITERATION NO. IS    125
 IER =     1
  EUCLIDEAN NORM OF FUN IS LESS THAN FTOL
```

STATE POINT	TEMPER.	ENTHALPY	FLOW RATE	CONCENTR.	PRESSURE	VAPOR FR.
1	5.5000D+01	2.3137D+01	4.0210D+02	0.0000D+00	0.0000D+00	0.0000D+00
2	5.1264D+01	1.9440D+01	4.0210D+02	0.0000D+00	0.0000D+00	0.0000D+00
3	5.0391D+01	1.0830D+03	1.4552D+00	0.0000D+00	1.8069D-01	1.0000D+00
4	8.5000D+01	5.2890D+01	5.9300D+01	0.0000D+00	0.0000D+00	0.0000D+00
5	1.1639D+02	8.4158D+01	5.9300D+01	0.0000D+00	0.0000D+00	0.0000D+00
6	1.0419D+02	4.0904D+01	2.3700D+01	5.5353D+01	1.8069D-01	0.0000D+00
7	1.4592D+02	6.1445D+01	2.3700D+01	5.5353D+01	7.8113D-01	0.0000D+00
8	1.3000D+02	1.4792D+02	1.1860D+02	0.0000D+00	0.0000D+00	0.0000D+00
9	1.6381D+02	1.3164D+02	1.1860D+02	0.0000D+00	0.0000D+00	0.0000D+00
10	1.6910D+02	1.1357D+03	1.4552D+00	0.0000D+00	7.8113D-01	1.0000D+00
11	1.6910D+02	7.7968D+01	2.2245D+01	5.8974D+01	7.8113D-01	0.0000D+00
12	1.2236D+02	5.6083D+01	2.2245D+01	5.8974D+01	1.8069D-01	0.0000D+00
13	8.5000D+01	5.2890D+01	2.5620D+02	0.0000D+00	0.0000D+00	0.0000D+00
14	9.1137D+01	5.8991D+01	2.5620D+02	0.0000D+00	0.0000D+00	0.0000D+00
15	9.3637D+01	6.1479D+01	1.4552D+00	0.0000D+00	7.8113D-01	0.0000D+00
16	1.1919D+02	5.4753D+01	2.2216D+01	5.9051D+01	1.8069D-01	0.0000D+00
17	1.5478D+02	6.5561D+01	2.3791D+01	5.5141D+01	7.8113D-01	0.0000D+00
18	5.0391D+01	6.1479D+01	1.4552D+00	0.0000D+00	1.8069D-01	4.0305D-02
19	9.3637D+01	1.1017D+03	1.4552D+00	0.0000D+00	7.8113D-01	1.0000D+00
20	5.0391D+01	6.1479D+01	1.4552D+00	0.0000D+00	1.8069D-01	4.0305D-02

THE EQUIVALENT HEAT TRANSFER QUANTITIES
FOR EVERY UNIT

NO.	TYPE	UA	EFF	CAT	LMTD
1	E	6.6210D+02	8.1065D-01	8.7275D-01	2.2452D+00
2	H	2.3660D+01	7.2000D-01	1.8176D+01	2.0577D+01
3	D	1.9428D+02	6.4180D-01	9.0343D+00	9.9379D+00
4	C	3.1579D+02	7.1054D-01	2.5000D+00	4.9500D+00
5	A	2.1795D+02	9.1830D-01	2.7931D+00	8.5072D+00
6	V	0.0000D+00	0.0000D+00	0.0000D+00	0.0000D+00

NO.	TYPE	HEAT TRANSFER	EQ. DEV.	IPINCH
1	E	1.4866D+03	0.000D+00	-1
2	H	4.8683D+02	0.000D+00	-1
3	D	1.9308D+03	0.000D+00	-1
4	C	1.5632D+03	0.000D+00	1
5	A	1.8542D+03	-2.000D+00	1
6	V	0.0000D+00	0.000D+00	0

Table 3. Sample output file for a single stage chiller LiBr-H_2O cycle, with *MSGLVL* = 100 (See Fig. 2.)

```
SINGLE STAGE CHILLER LIBR-H2O

 INPUT AND OUTPUT IN BRITISH UNITS

 THE BRITISH UNITS ARE :
 TEMPERATURES        (T)   IN  DEG F
 MASS FLOWS          (F)   IN  LB/MIN
 CONCENTRATION       (C)   IN  PERCENTS
 ENTHALPIES          (H)   IN  BTU/LB
 PRESSURES           (P)   IN  PSIA
 HEAT QUANTITIES     (Q)   IN  BTU/MIN

TOLERANCES IN F, X          1.0D-06      1.0D-09

NO. OF UNITS      6
NO. OF STATE POINTS     20

    1     5     1   662.1000    -1     0.0000
   20     3     1     2   18     0     0
    2     3     2       0.7200     0     0.0000
    6     7    11    12     0     0     0
    3     2     4       9.9379    -1     0.0000
    7    10     8     9    11    17     0
    4     4     3       2.5000     1     0.0000
   10    15    13    14    19     0     0
    5     1     2       0.9183     1    -2.0000
   12     3     4     5     6    16     0
    6     6     0       0.0000     0     0.0000
   15    20     0     0     0     0     0

STARTING POINTS
    1     3     0   55.0     0   402.10     0     0.0     0     0.0     0     0.0
    2     3     1   60.0     0   402.10     0     0.0     0     0.0     0     0.0
    3     3     3   60.0     3     3.70     0     0.0     3     1.0     0     1.0
    4     3     0   85.0     0    59.30     0     0.0     0     0.0     0     0.0
    5     3     1   60.0     0    59.30     0     0.0     0     0.0     0     0.0
    6     1     1   60.0     0    23.70     3    45.0     3     1.0     0     0.0
    7     1     1   60.0     0    23.70     3    45.0     2     3.0     0     0.0
    8     3     0  180.0     0   118.60     0     0.0     0     0.0     0     0.0
    9     3     1   60.0     0   118.60     0     0.0     0     0.0     0     0.0
   10     3     2   60.0     3     3.70     0     0.0     2     3.0     0     1.0
   11     1     2   60.0     2    20.00     2    55.0     2     3.0     0     0.0
   12     1     1   60.0     2    20.00     2    55.0     3     1.0     0     0.0
   13     3     0   85.0     0   256.20     0     0.0     0     0.0     0     0.0
   14     3     1   60.0     0   256.20     0     0.0     0     0.0     0     0.0
   15     3     4   60.0     3     3.70     0     0.0     2     3.0     0     0.0
   16     1     1   60.0     0     0.00     1    54.0     3     1.0     0     0.0
   17     1     1   60.0     0     0.00     1    46.0     2     3.0     0     0.0
   18     3     3   60.0     3     3.70     0     0.0     3     1.0     2     0.1
   19     3     4   60.0     3     3.70     0     0.0     2     3.0     0     1.0
   20     3     3   60.0     3     3.70     0     0.0     3     1.0     2     0.1
```

Table 3. (continued)

STARTING POINTS	AFTER CONSTRAINTS WERE APPLIED	
1	55.0	0
2	54.9	1
3	54.8	3
4	85.0	0
5	85.1	1
6	85.1	1
7	85.2	1
8	180.0	0
9	60.1	1
10	85.2	2
11	85.2	2
12	85.1	1
13	85.0	0
14	85.1	1
15	85.2	4
16	85.1	1
17	59.9	1
18	54.8	3
19	85.2	4
20	54.8	3

NO. OF VARIABLES	21
NO. OF TEMPERATURES	12
NO. OF CONCENTRATIONS	4
NO. OF FLOWS	2
NO. OF PRESSURES	2
NO. OF VAPOUR FRACTIONS	1

TOTAL NO. OF EQUATIONS OR FUNS	23
NO. OF NON-LINEAR EQUATIONS	18
NO. OF VARIABLES	21
NO. OF REDUNDANT FUNS	2

Table 3. (continued)

ITERATION NO. 100

STATE POINT	TEMPCR.	ENTHALPY	FLOWRATE	CONCENT.	PRESS.	VAPOR FRAC.	FUN
1	5.500D+01	2.314D+01	4.021D+02	0.000D+00	0.000D+00	0.000D+00	3.293D-04
2	5.127D+01	1.945D+01	4.021D+02	0.000D+00	0.000D+00	0.000D+00	1.914D-03
3	5.034D+01	1.083D+03	1.460D+00	0.000D+00	1.806D-01	1.000D+00	5.170D-07
4	3.500D+01	5.289D+01	5.930D+01	0.000D+00	0.000D+00	0.000D+00	1.241D-14
5	1.165D+02	8.426D+01	5.930D+01	0.000D+00	0.000D+00	0.000D+00	1.845D-05
6	1.042D+02	4.097D+01	2.370D+01	5.538D+01	1.806D-01	0.000D+00	6.717D-06
7	1.460D+02	6.153D+01	2.370D+01	5.538D+01	7.316D-01	0.000D+00	2.506D-07
8	1.800D+02	1.479D+02	1.186D+02	0.000D+00	0.000D+00	0.000D+00	5.280D-07
9	1.638D+02	1.316D+02	1.186D+02	0.000D+00	0.000D+00	0.000D+00	2.347D-04
10	1.693D+02	1.136D+03	1.460D+00	0.000D+00	7.816D-01	1.000D+00	-1.754D-06
11	1.693D+02	7.311D+01	2.224D+01	5.901D+01	7.816D-01	0.000D+00	-3.885D-07
12	1.223D+02	5.620D+01	2.224D+01	5.901D+01	1.806D-01	0.000D+00	0.000D+00
13	8.500D+01	5.289D+01	2.562D+02	0.000D+00	0.000D+00	0.000D+00	5.128D-06
14	9.116D+01	5.901D+01	2.562D+02	0.000D+00	0.000D+00	0.000D+00	8.876D-06
15	9.366D+01	6.150D+01	1.460D+00	0.000D+00	7.816D-01	0.000D+00	6.132D-07
16	1.193D+02	5.488D+01	2.221D+01	5.909D+01	1.806D-01	0.000D+00	7.573D-07
17	1.549D+02	6.564D+01	2.379D+01	5.516D+01	7.816D-01	0.000D+00	-7.133D-15
18	5.034D+01	6.146D+01	1.460D+00	0.000D+00	1.806D-01	4.034D-02	-5.719D-04
19	9.366D+01	1.102D+03	1.460D+00	0.000D+00	7.816D-01	1.000D+00	8.842D-05
20	5.034D+01	6.146D+01	1.460D+00	0.000D+00	1.806D-01	4.034D-02	1.299D-04
21	0.000D+00	0.000D+00	0.000D+00	0.000D+00	0.000D+00	0.000D+00	1.710D-04

LAST ITERATION NO. IS 125

IER = 1

EUCLIDEAN NORM OF FUN IS LESS THAN FTOL

1	9.7199D-03	5.2767D-13
2	3.0064D-03	-9.9759D-10
3	5.1072D-01	1.9849D-12
4	4.1683D-01	-3.2849D-14
5	7.3784D-01	5.3545D-11
6	8.7548D-01	5.3138D-12
7	9.1616D-01	-3.4272D-12
8	5.5664D-01	3.1176D-12
9	3.1644D-01	5.2474D-10
10	3.3567D-01	-1.1553D-11
11	5.3221D-01	-1.6094D-12
12	8.0599D-01	2.7329D-17
13	9.5353D-01	5.7256D-12
14	5.8974D-01	3.1102D-11
15	5.9031D-01	-1.5341D-13
16	5.5141D-01	-2.1543D-12
17	3.5932D-03	-3.3559D-14
18	5.4925D-02	5.2968D-13
19	3.6138D-02	-2.7125D-12
20	1.5623D-01	-3.0585D-12
21	4.0305D-02	-5.0479D-12

Table 3. (continued)

STATE POINT	TEMPER.	ENTHALPY	FLOW RATE	CONCENTR.	PRESSURE	VAPOR FR.
1	5.5000D+01	2.3137D+01	4.0210D+02	0.0000D+00	0.0000D+00	0.0000D+00
2	5.1264D+01	1.9440D+01	4.0210D+02	0.0000D+00	0.0000D+00	0.0000D+00
3	5.0391D+01	1.0830D+03	1.4552D+00	0.0000D+00	1.8069D-01	1.0000D+00
4	8.5000D+01	5.2890D+01	5.9300D+01	0.0000D+00	0.0000D+00	0.0000D+00
5	1.1639D+02	8.4158D+01	5.9300D+01	0.0000D+00	0.0000D+00	0.0000D+00
6	1.0419D+02	4.0904D+01	2.3700D+01	5.5353D+01	1.8069D-01	0.0000D+00
7	1.4592D+02	6.1445D+01	2.3700D+01	5.5353D+01	7.8113D-01	0.0000D+00
8	1.8000D+02	1.4792D+02	1.1860D+02	0.0000D+00	0.0000D+00	0.0000D+00
9	1.6381D+02	1.3164D+02	1.1860D+02	0.0000D+00	0.0000D+00	0.0000D+00
10	1.6910D+02	1.1357D+03	1.4552D+00	0.0000D+00	7.8113D-01	1.0000D+00
11	1.6910D+02	7.7968D+01	2.2245D+01	5.8974D+01	7.8113D-01	0.0000D+00
12	1.2236D+02	5.6083D+01	2.2245D+01	5.8974D+01	1.8069D-01	0.0000D+00
13	8.5000D+01	5.2890D+01	2.5620D+02	0.0000D+00	0.0000D+00	0.0000D+00
14	9.1137D+01	5.8991D+01	2.5620D+02	0.0000D+00	0.0000D+00	0.0000D+00
15	9.3637D+01	6.1479D+01	1.4552D+00	0.0000D+00	7.8113D-01	0.0000D+00
16	1.1919D+02	5.4753D+01	2.2216D+01	5.9051D+01	1.8069D-01	0.0000D+00
17	1.5478D+02	6.5561D+01	2.3791D+01	5.5141D+01	7.8113D-01	0.0000D+00
18	5.0391D+01	6.1479D+01	1.4552D+00	0.0000D+00	1.8069D-01	4.0305D-02
19	9.3637D+01	1.1017D+03	1.4552D+00	0.0000D+00	7.8113D-01	1.0000D+00
20	5.0391D+01	6.1479D+01	1.4552D+00	0.0000D+00	1.8069D-01	4.0305D-02

THE EQUIVALENT HEAT TRANSFER QUANTITIES
FOR EVERY UNIT

NO.	TYPE	UA	EFF	CAT	LMTD
1	E	6.6210D+02	8.1065D-01	8.7275D-01	2.2452D+00
2	H	2.3660D+01	7.2000D-01	1.8176D+01	2.0577D+01
3	D	1.9428D+02	6.4180D-01	9.0343D+00	9.9379D+00
4	C	3.1579D+02	7.1054D-01	2.5000D+00	4.9500D+00
5	A	2.1795D+02	9.1830D-01	2.7931D+00	8.5072D+00
6	V	0.0000D+00	0.0000D+00	0.0000D+00	0.0000D+00

NO.	TYPE	HEAT TRANSFER	EQ. DEV.	IPINCH
1	E	1.4866D+03	0.000D+00	-1
2	H	4.8683D+02	0.000D+00	-1
3	D	1.9308D+03	0.000D+00	-1
4	C	1.5632D+03	0.000D+00	1
5	A	1.8542D+03	-2.000D+00	1
6	V	0.0000D+00	0.000D+00	0

4. THE MAIN PROGRAM

The principal tasks performed by the main program are (1) interpreting the user input, (2) forming a variable vector, (3) linking the units and forming an equation matrix, (4) normalizing the variables, and (5) activating the solver. The main program calls the unit subroutines and the solver package, when required, as illustrated in Fig.1.

By scanning through the State Point Input, the main program is able to identify the variable quantities by their nonzero flags. A variable quantity that has the same nonzero flag greater than unity at two or more different state points is entered only once into the variable vector. The physical variables are normalized by division by the proper scaling parameters, which are taken from the second card in the General Preliminary Input.

The variable vector can contain unknown temperatures, flow rates, concentrations, pressures, and vapor fractions. Other unknown properties, such as enthalpy, are treated as dependent variables and are calculated at each iteration from the current values of the properties in the variable vector.

Calling the unit subroutines in the order in which they are given in the Unit Input enables the main program to collect the equations associated with each and to substitute in them the appropriate variables and fixed quantities as mandated by the units' interconnections. The equations are counted and each is assigned a number. During the solution process, the residues of the equations are calculated at successive iterations. The equations are normalized using the scaling parameters.

Before beginning to solve, the program displays (at the user's request) the total number of equations and unknowns. For a unique solution to be obtained, the number of equations must be greater than or equal to the number of unknowns. Usually, the former exceeds the latter, because calls to unit subroutines sometime generate redundant equations, which originate from essentially identical mass balances at different units. The redundant equations are eliminated automatically by the program.

When all the unknown variables have been computed to the desired accuracy, the main program converts them back from dimensionless values to physical values.

5. UNIT SUBROUTINES AND GOVERNING EQUATIONS

Each of the system's standard units is modeled in a subroutine. The unit is treated as a black box, with its own inputs and outputs, that can be connected to other components. The governing equations consider the unit as a whole and are formed from some or all of the following physical laws.

- Conservation of mass for each material species (absorbent/absorbate) or conservation of total mass:

$$\sum_i (F_i C_i) = 0 . \tag{1}$$

- Energy balance:

$$\sum_i (F_i h_i) = 0 . \tag{2}$$

- Heat transfer, expressed in one of the following four forms:

$$\dot{Q}_{unit} - UA\ \underline{LMTD} = 0 , \tag{3a}$$
$$\underline{EFF} - EFF = 0 , \tag{3b}$$
$$\underline{CAT} - CAT = 0 , \quad \text{or} \tag{3c}$$
$$\underline{LMTD} - LMTD = 0 , \tag{3d}$$

where *EFF*, *CAT*, and *LMTD* are user-supplied values of the heat transfer effectiveness and of the closest approach temperature and logarithmic mean temperature difference respectively and $\underline{EFF}$, $\underline{CAT}$, and $\underline{LMTD}$ are calculated values of these quantities in terms of the temperatures at each unit's state points. When specifying a unit in terms of *EFF* or *CAT*, the user must indicate the location of the temperature pinch, whether at the hot or cold end, by setting the integer flag *IPINCH* to +1 or −1 respectively. Figure 4 illustrates the two possibilities in counterflow heat exchange and defines *CAT* and *EFF* for each case. The definition of $\underline{LMTD}$ is the same in both cases. By setting *IPINCH* = 0, the user lets the code decide the location of the pinch.

- Vapor pressure–temperature–concentration (*PTX*) equilibrium between liquid and vapor:

$$f(P_i, T_i, C_i) = 0 . \tag{4}$$

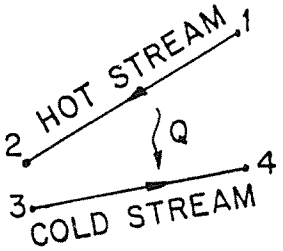

PINCH AT COLD END, *IPINCH* = –1

$\underline{CAT} = T_2 - T_3$

$\underline{EFF} = (T_1 - T_2)/(T_1 - T_3)$

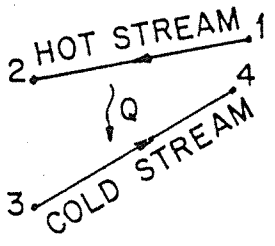

PINCH AT HOT END, *IPINCH* = +1

$\underline{CAT} = T_1 - T_4$

$\underline{EFF} = (T_4 - T_3)/(T_1 - T_3)$

$$\underline{LMTD} = \frac{(T_1 - T_4) - (T_2 - T_3)}{\ln[(T_1 - T_4)/(T_2 - T_3)]}$$

Figure 4. Illustration of the two possibilities for temperature variations in counterflow heat exchange.

- Mass transfer, expressed in terms of temperature deviation from equilibrium (DEV):

$$T_t = T_{tE}(P_t,\ C_t) + DEV\,. \tag{5}$$

From the above equations for each unit, a set of nonlinear equations is formed for the entire system and must be solved simultaneously. This is done by expressing the equations in the form of functions the residuals of which must be reduced by the solver to zero or, in practice, to a value below a given tolerance:

$$\begin{aligned}
&F_1(x_1,\ x_2 \ldots\ldots\ldots\ x_n) = \delta_1,\\
&F_2(x_1,\ x_2 \ldots\ldots\ldots\ x_n) = \delta_2\,,\\
&\cdot\\
&\cdot\\
&F_t(x_1,\ x_2 \ldots\ldots\ldots\ x_n) = \delta_t,\\
&\cdot\\
&\cdot\\
&F_n(x_1,\ x_2 \ldots\ldots\ldots\ x_n) = \delta_n,\\
&|\ \delta_t\ | \rightarrow 0 \text{ at the solution}\,.
\end{aligned} \tag{6}$$

By its nature, a system of simultaneous nonlinear equations has many solutions. One of the main problems in developing the code has been to ensure the physical solution regardless of the starting point. To ensure the solution, constraints were introduced into the program. The constraints are of an inequality type and are generated by the unit subroutines when called, in much the same way as are the equations. Each unit has its own constraints that ensure, for example, that the heat flow is from a hot to a cold stream and not vice versa.

Following is a detailed listing, by unit, of the governing equations and constraints in each unit subroutine.

5.1 ABSORBER (SUBROUTINE ABSORB)

The absorber is referred to in the code as unit type 1 and is described schematically in Fig. 3. A strong liquid absorbent (state 1) enters the unit at a total pressure equal to or greater than the absorber pressure. It contacts absorbate vapor that may contain some liquid at state 2. Absorption occurs while heat is rejected to the coolant stream that enters at state 3 and leaves at state 4. The absorbent exits weaker at state 5. The entering, strong absorbent may be

subcooled or superheated; it is therefore allowed to reach equilibrium at point 6 by adiabatic absorption or desorption [8] before the absorption process 6 → 5, accompanied by heat transfer, begins. The coolant may be any liquid (e.g., water or absorbent solution) or phase-changing pure substance (e.g., water evaporating into steam). The governing equations are

- overall mass balance,

$$F_1 + F_2 - F_5 = 0; \tag{7}$$

- absorbent/absorbate mass balance,

$$F_1 C_1 + F_2 C_2 - F_5 C_5 = 0; \tag{8}$$

- energy balance,

$$(F_1 h_1 + F_2 h_2 - F_5 h_5) - F_3 (h_4 - h_3) = 0; \tag{9}$$

- heat transfer [one of the equations (3a), (3b), (3c), or (3d)],

where

$$\underline{Q_{unit}} = F_3 (h_4 - h_3), \tag{10a}$$

$$\underline{LMTD} = \frac{(T_6 - T_4) - (T_5 - T_3)}{\ln[(T_6 - T_4)/(T_5 - T_3)]}, \tag{10b}$$

$$\underline{CAT} = (T_5 - T_3) \text{ for } IPINCH = -1 \text{ and}$$
$$= (T_6 - T_4) \text{ for } IPINCH = +1, \tag{10c}$$

$$\underline{EFF} = (T_6 - T_5)/(T_6 - T_3) \text{ for } IPINCH = -1 \text{ and}$$
$$= (T_4 - T_3)/(T_6 - T_3) \text{ for } IPINCH = +1; \tag{10d}$$

- mass transfer,

$$T_5 = T_{5E}(P_5, C_5) + DEV; \text{ and} \tag{11}$$

- adiabatic equilibrium at point 6 (if $T_6 = T_1$, then $C_6 = C_1$),

$$(h_1 - h_2)/(h_1 - h_6) = (C_1 - C_2)/(C_1 - C_6), \tag{12}$$

$$T_6 = T_{6E}(P_6, C_6), \text{ and} \tag{13}$$

$$F_6/F_1 = (C_1 - C_2)/(C_6 - C_2) \; . \tag{14}$$

Thus we have a total of eight equations. The constraints are

$$\begin{aligned} &T_6 > T_4 \; , \\ &T_5 > T_3 \; , \text{ and} \\ &T_4 \geq T_3 \; . \end{aligned} \tag{15}$$

5.2 DESORBER (SUBROUTINE DESORB)

The desorber is referred to in the code as unit type 2 and is described schematically in Fig. 3. A weak liquid absorbent (state 1) enters the unit at a total pressure equal to or greater than the desorber pressure. The absorbent receives heat from a heating fluid, which enters at state 3 and leaves at state 4, and also releases absorbate vapor at state 2. The absorbent exits stronger at state 5. The entering weak absorbent may be subcooled or superheated; it is therefore allowed to reach equilibrium at point 6 by adiabatic absorption or desorption [8] before the desorption process 6 → 5, accompanied by heat transfer, begins. The heat transfer fluid may be any liquid (e.g., water or absorbent solution) or phase-changing pure substance (e.g., condensing steam). The governing equations are

- overall mass balance,

$$F_2 + F_5 - F_1 = 0 ; \tag{16}$$

- absorbent/absorbate mass balance,

$$F_2 C_2 + F_5 C_5 - F_1 C_1 = 0 ; \tag{17}$$

- energy balance,

$$(F_2 h_2 + F_5 h_5 - F_1 h_1) - F_3 (h_3 - h_4) = 0 ; \tag{18}$$

- heat transfer [one of the equations (3a), (3b), (3c), or (3d)],

where

$$Q_{unit} = F_3 (h_3 - h_4) \; , \tag{19a}$$

$$\underline{LMTD} = \frac{(T_4 - T_6) - (T_3 - T_5)}{\ln[(T_4 - T_6)/(T_3 - T_5)]}, \tag{19b}$$

$$\underline{CAT} = (T_4 - T_6) \text{ for } IPINCH = -1 \text{ and}$$
$$= (T_3 - T_5) \text{ for } IPINCH = +1 , \tag{19c}$$

$$\underline{EFF} = (T_3 - T_4)/(T_3 - T_6) \text{ for } IPINCH = -1 \text{ and}$$
$$= (T_5 - T_6)/(T_3 - T_6) \text{ for } IPINCH = +1 ; \tag{19d}$$

- mass transfer,

$$T_5 = T_{5E}(P_5, C_5) + DEV ; \tag{20}$$

- equilibrium at point 2 (when $C_2 = 0$),

$$C_2 = C_{2E}(T_2, P_2) ; \text{ and} \tag{21}$$

- adiabatic equilibrium at point 6 (when $C_6 \neq C_1$ and $T_6 \neq T_1$),

$$(h_1 - h_2)/(h_1 - h_6) = (C_1 - C_2)/(C_1 - C_6) \tag{22}$$
$$T_6 = T_{6E}(P_6, C_6) , \text{ and} \tag{23}$$
$$F_6/F_1 = (C_1 - C_2)/(C_6 - C_2) . \tag{24}$$

Thus, we have a total of nine equations. The constraints are

$$T_3 > T_5 ,$$
$$T_4 > T_6 ,$$
$$T_5 > T_6 , \text{ and}$$
$$T_3 \geq T_4 . \tag{25}$$

5.3 COUNTERFLOW HEAT EXCHANGER (SUBROUTINE HEX)

The heat exchanger is referred to in the code as unit type 3 and is described schematically in Fig. 3. A hot stream entering at state 3 and leaving at state 4 transfers heat in counterflow to a cold stream entering at state 1 and leaving at state 2. Either stream may comprise any liquid or gas not undergoing a phase change. The governing equations are

- energy balance,

$$F_3(h_3 - h_4) - F_1(h_2 - h_1) = 0 \text{ and} \tag{26}$$

- heat transfer [one of the equations (3a), (3b), (3c), or (3d)],

where

$$\underline{Q_{unit}} = F_1(h_2 - h_1)\,, \tag{27a}$$

$$\underline{LMTD} = \frac{(T_3 - T_2) - (T_4 - T_1)}{\ln[(T_3 - T_2)/(T_4 - T_1)]}\,, \tag{27b}$$

$$\underline{CAT} = (T_4 - T_1) \text{ for } IPINCH = -1 \text{ and}$$
$$= (T_3 - T_2) \text{ for } IPINCH = +1\,, \tag{27c}$$

$$\underline{EFF} = (T_3 - T_4)/(T_3 - T_1) \text{ for } IPINCH = -1 \text{ and}$$
$$= (T_2 - T_1)/(T_3 - T_1) \text{ for } IPINCH = +1\,. \tag{27d}$$

Thus we have a total of two equations. The constraints are

$$T_3 > T_2 \text{ and}$$
$$T_4 > T_1\,. \tag{28}$$

5.4 CONDENSER (SUBROUTINE COND)

The condenser is referred to in the code as unit type 4 and is described schematically in Fig. 3. A vapor that is either saturated or superheated at the condenser pressure enters the unit at state 1. If superheated, it first cools to the condensing temperature at state 5. The condensation process takes place between states 5 and 2, and heat is rejected to a coolant, which may be any liquid or a phase-changing pure substance. The condensate leaving at state 2 is a saturated liquid. The governing equations are

- energy balance,

$$F_3(h_4 - h_3) - F_1(h_1 - h_2) = 0\,; \tag{29}$$

- heat transfer [one of the equations (3a), (3b), (3c), or (3d)],

where

$$\underline{Q_{unit}} = F_3(h_4 - h_3)\,, \tag{30a}$$

$$\underline{LMTD} = \frac{(T_5 - T_4) - (T_2 - T_3)}{\ln[(T_5 - T_4)/(T_2 - T_3)]}\,, \tag{30b}$$

$$\underline{CAT} = (T_2 - T_3) \text{ for } IPINCH = -1 \text{ and}$$
$$= (T_5 - T_4) \text{ for } IPINCH = +1\,, \tag{30c}$$

$$\underline{EFF} = (T_5 - T_2)/(T_5 - T_3) \text{ for } IPINCH = -1 \text{ and}$$

$$= (T_4 - T_3)/(T_5 - T_3) \text{ for } IPINCH = +1 \; ; \tag{30d}$$

- mass transfer,

$$T_2 = T_{2E}(P_2, C_2) + DEV; \text{ and} \tag{31}$$

- equilibrium at point 5 (when $C_5 \neq 0$ and $T_1 \neq T_5$),

$$T_5 = T_{5E}(P_5, C_5) \, . \tag{32}$$

Thus we have a total of four equations. The constraints are

$$\begin{aligned} &T_5 > T_4 \, , \\ &T_2 > T_3 \, , \text{ and} \\ &T_4 \geq T_3 \, . \end{aligned} \tag{33}$$

5.5 EVAPORATOR (SUBROUTINE EVAP)

The evaporator is referred to in the code as unit type 5 and is described schematically in Fig. 3. A subcooled liquid or saturated vapor-liquid mixture at the evaporator pressure enters the unit at state 1. If subcooled, it first heats to the evaporation temperature at state 5. The evaporation process takes place between states 5 and 2, and heat is received from a heating fluid, which may be any liquid or phase-changing pure substance. The substance leaving at state 2 may be a saturated vapor or, in the case of incomplete evaporation, a vapor-liquid mixture at saturation.

The governing equations are

- energy balance,

$$F_3(h_3 - h_4) - F_1(h_2 - h_1) = 0 \; ; \tag{34}$$

- heat transfer [one of the equations (3a), (3b), (3c), or (3d)],

where

$$Q_{unit} = F_3(h_3 - h_4) \, , \tag{35a}$$

$$\underline{LMTD} = \frac{(T_3 - T_2) - (T_4 - T_5)}{\ln[(T_3 - T_2)/(T_4 - T_5)]}, \tag{35b}$$

$$\underline{CAT} = (T_4 - T_5) \text{ for } IPINCH = -1 \text{ and}$$
$$= (T_3 - T_2) \text{ for } IPINCH = +1 , \tag{35c}$$

$$\underline{EFF} = (T_3 - T_4)/(T_3 - T_5) \text{ for } IPINCH = -1 \text{ and}$$
$$= (T_2 - T_5)/(T_3 - T_5) \text{ for } IPINCH = +1 ; \tag{35d}$$

- equilibrium at point 5 (when $T_5 \neq T_1$),

$$T_5 = T_{5E}(P_5, C_5) ; \text{ and} \tag{36}$$

- equilibrium at point 2 (when $T_2 \neq T_5$),

$$C_2 = W_2 C_{2VE}(P_2, T_2) + (1 - W_2) C_{2LE}(P_2, T_2) . \tag{37}$$

Thus we have a total of four equations. The constraints are

$$T_3 > T_2$$
$$T_4 > T_5 , \text{ and}$$
$$T_3 \geq T_4 . \tag{38}$$

5.6 VALVE (SUBROUTINE VALVE)

The valve is referred to in the code as unit type 6 and is described schematically in Fig. 3. Liquid or a liquid-vapor mixture enters at state 1 and expands to the lower pressure at state 2, yielding saturated vapor or liquid-vapor mixture. The governing equations are

- energy balance,

$$h_2 - h_1 = 0 , \text{ and} \tag{39}$$

enough information to define enthalpy at the inlet T, P, C_i would seem to do it. Would vapor fraction be necessary?

- equilibrium at point 2,

$$T_2 = T_{2E}(P_2, C_2) , \tag{40}$$

looks like P_2 would be all that's needed, as long as C_i is also given

a total of two equations.

5.7 MIXER (SUBROUTINE MIX)

The mixer is referred to in the code as unit type 7 and is described schematically in Fig. 3. Two streams (states 1 and 2) may be at different temperatures, flow rates, concentrations, and vapor fractions but enter the unit at the same pressure and combine to yield a third stream (state 3). The governing equations are

- overall mass balance,

$$F_1 + F_2 - F_3 = 0; \tag{41}$$

- absorbent/absorbate mass balance,

$$F_1 C_1 + F_2 C_2 - F_3 C_3 = 0; \text{ and} \tag{42}$$

- energy balance,

$$F_1 h_1 + F_2 h_2 - F_3 h_3 = 0, \tag{43}$$

a total of three equations.

5.8 SPLITTER (SUBROUTINE SPLIT)

The splitter is referred to in the code as unit type 8 and is described schematically in Fig. 3. A stream at state 3 splits into two parts: 1 and 2. Only one equation governs this unit: overall mass balance,

$$F_3 - F_2 - F_1 = 0. \tag{44}$$

5.9 RECTIFIER (SUBROUTINE RECT)

The rectifier is referred to in the code as unit type 9 and is described schematically in Fig. 3. Saturated or superheated vapor at state 1 enters the unit at the rectifier pressure. Part of this vapor condenses as heat is rejected to the coolant and leaves the rectifier as saturated reflux liquid (state 5). The distilled vapor, now at saturation, leaves at state 2. The coolant may be any liquid or phase-changing pure substance. The governing equations are

- overall mass balance,

$$F_1 - F_2 - F_5 = 0; \tag{45}$$

- absorbent/absorbate mass balance,

$$F_1 C_1 - F_2 C_2 - F_5 C_5 = 0; \tag{46}$$

- energy balance,

$$F_3(h_4 - h_3) - (F_1 h_1 - F_2 h_2 - F_5 h_5) = 0; \tag{47}$$

- heat transfer [one of the equations (3a), (3b), (3c), or (3d)],

where

$$Q_{unit} = F_3(h_4 - h_3), \tag{48a}$$

$$\underline{LMTD} = \frac{(T_6 - T_4) - (T_5 - T_3)}{\ln[(T_6 - T_4)/(T_5 - T_3)]}, \tag{48b}$$

$$\underline{CAT} = (T_5 - T_3) \text{ for } IPINCH = -1 \text{ and}$$
$$= (T_6 - T_4) \text{ for } IPINCH = +1, \tag{48c}$$

$$\underline{EFF} = (T_6 - T_5)/(T_6 - T_3) \text{ for } IPINCH = -1 \text{ and}$$
$$= (T_4 - T_3)/(T_6 - T_3) \text{ for } IPINCH = +1; \tag{48d}$$

- equilibrium at point 2,

$$C_2 = C_{2E}(P_2, T_2); \tag{49}$$

- mass transfer,

$$T_5 = T_{5E}(P_5, C_5) + DEV; \text{ and} \tag{50}$$

- equilibrium at point 6 (when $T_6 \neq T_1$),

$$C_6 = C_{6E}(P_6, T_6). \tag{51}$$

Thus we have a total of seven equations. The constraints are

$$
\begin{aligned}
&T_6 > T_5 \,, \\
&T_6 > T_4 \,, \\
&T_5 > T_3 \,, \text{ and} \\
&T_4 \geq T_3 \,.
\end{aligned}
\tag{52}
$$

6. MATERIAL PROPERTIES

The thermodynamic properties of working fluids have been incorporated in the code in the form of a property data base external to the unit subroutines. The purpose for doing so was twofold: first, to enhance modularity and flexibility by allowing different parts of a system to operate with different working fluids and, second, to allow the database to be extended in the future and to allow properties of additional materials to be added without affecting the rest of the program. Under this approach, each unit subroutine, when invoked, calls the data base several times and retrieves from it the properties required by its various equations. Also, the material may vary from one state point to another, as specified by the user.

The structure of the data base is illustrated in Fig. 5. Two main subroutines, EQB and ENTHAL, form the interface between the property data base and the rest of the program and channel the flow of data to and from the specific fluid subroutines EQB*i*, one for each material *i*. These in turn evoke more routines, which produce information on equilibrium temperatures, equilibrium vapor concentration, liquid and vapor enthalpies, and the like for the material *i*. Subroutine EQB deals with the independent properties—temperatures, pressures, and concentrations—and is called by the unit subroutines as they generate the equations at each iteration. Subroutine ENTHAL deals with the dependent property—enthalpy—and is called at the end of an iteration, after the independent properties have been determined at all state points for that iteration.

The structure of each specific fluid routine varies according to the nature of the substance and data available. Originally, a uniform data structure was used for all fluids but was ineffective. Some materials may be easily described by a single property; others require a very complicated and cumbersome formula to cover only part of the range, and the round-off error resulting from substitution in such a formula is prohibitively large. Furthermore, some materials behave quite differently in one part of the range than in other parts. Mixtures with a volatile absorbent such as ammonia-water exhibit very steep derivatives of temperature and pressure with respect to vapor concentrations at high compositions of the more volatile component. Therefore, whatever form was most convenient and accurate was used for each material in each specific fluid routine. Table 4 lists the materials presently in the property data base.

A detailed description, by material, of the properties in the data base is given in the following section. A list of the equations is in Appendix A.

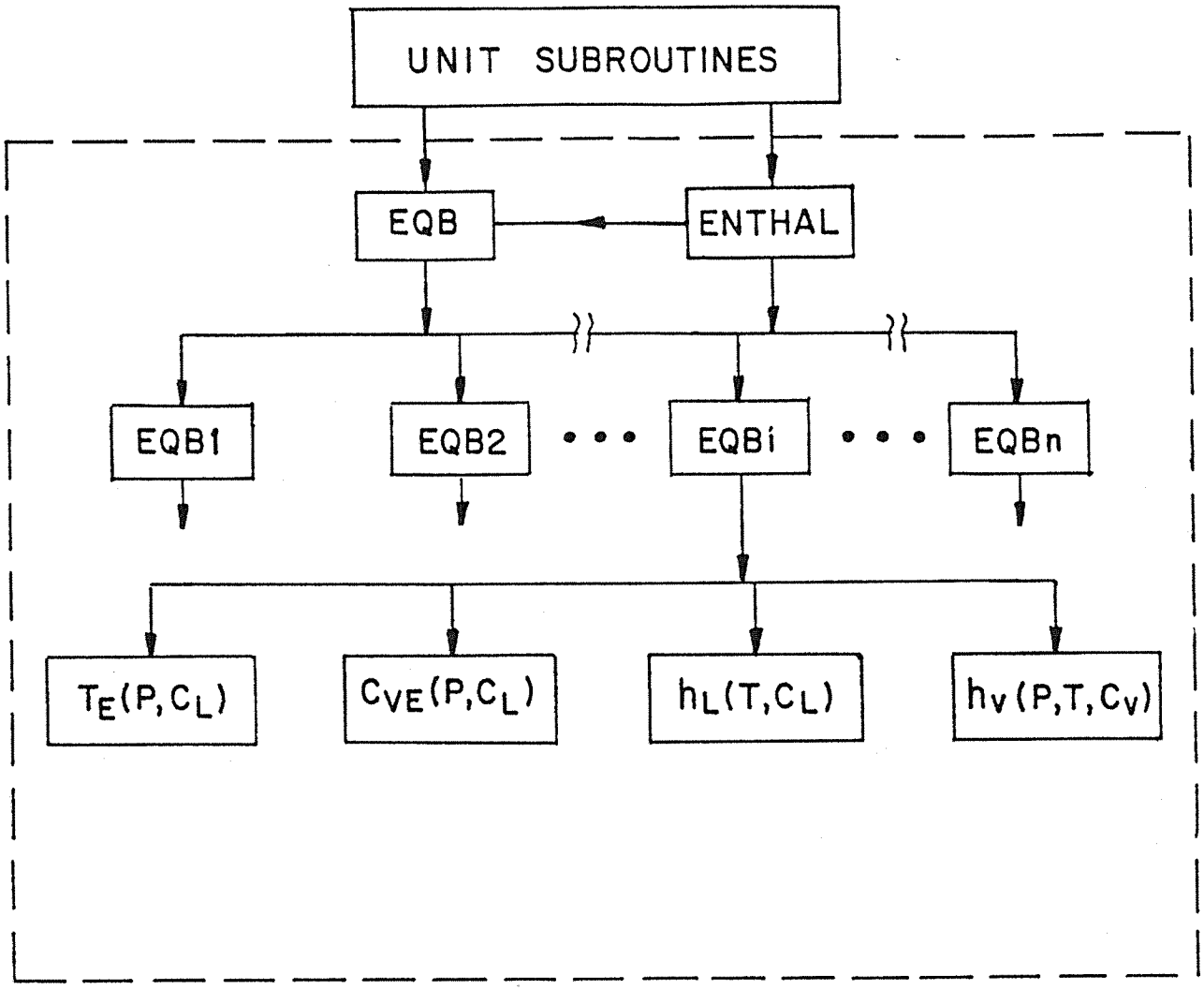

Figure 5. Structure of the property data base.

Table 4. Materials presently contained in the property data base

Material code	Material
1	$LiBr\text{-}H_2O$ solution
2	$H_2O\text{-}NH_3$ solution and vapor
3	H_2O liquid and vapor
4	$LiBr\text{-}H_2O\text{-}NH_3$ solution
5	$LiBr/ZnBr_2\text{-}CH_3OH$ solution
6	CH_3OH liquid and vapor
7	$LiNO_3/KNO_3/NaNO_3\text{-}H_2O$ solution

6.1 $LiBr\text{-}H_2O$ SOLUTION (CODE 1)

This solution has a nonvolatile absorbent, the salt LiBr, and uses H_2O (code 3) as an absorbate. Properties for this material for the practical range were compiled a few years ago by McNeely [9], who compared data from more than fifteen sources and developed the pressure-temperature-concentration (*PTX*) and enthalpy diagrams. The properties are also available in the form of mathematical formulas and were taken from Ref. 10.

Subroutine EQB1 for $LiBr\text{-}H_2O$ solution supplies the following property data: (1) equilibrium solution temperature as a function of LiBr concentration in the range $45\% < C < 70\%$ and absorbate (water) vapor pressure in the range $0.06 < P < 3.9$ psia and (2) liquid solution enthalpy as a function of solution concentration in the above range and solution temperature in the range $60°F < T < 330°F$.

6.2 $H_2O\text{-}NH_3$ SOLUTION AND VAPOR (CODE 2)

Because it was not possible to find a simple enough formula to describe ammonia-water properties, the data were incorporated in the code in tabular form. Two sources of tabular data, refs. 11 and 12, were compared with each other and found to be in agreement for most of the range. Jennings's tables [11] were used because they are more detailed and so make linear interpolation results more accurate. Jennings's tables give the equilibrium temperature, NH_3 content in vapor, liquid and vapor enthalpies as functions of pressure, and NH_3 concentration in the liquid.

The tables contain the entire range of ammonia concentrations and a pressure range from 1.45 psia to 406.2 psia. The enthalpy reference point is taken at 32°F (0°C), at which the enthalpy of both pure ammonia and pure water is considered to be zero. Thus, the tabulation is compatible with conventional steam tables. Because some pure ammonia tables use a datum of –40°F, a correction must be made for cross reference with such a table.

Subroutine EQB2 for H_2O-NH_3 supplies the following property data: (1) equilibrium liquid and vapor temperature as a function of pressure and ammonia concentration in the liquid, (2) liquid enthalpy as a function of the same, (3) equilibrium ammonia concentration in the vapor as a function of temperature and pressure, and (4) vapor enthalpy as a function of the same. All the properties are for the mixture at saturation.

6.3 H_2O LIQUID AND VAPOR (CODE 3)

As a pure substance, functional relations for properties of water do not include concentration. Reference 13 presents H_2O property data in the form of steam tables and in functional form. The latter form was chosen to be included in the data base.

Subroutine EQB3 for H_2O supplies the following property data: (1) saturation temperature as a function of pressure in the range $0.06 < P < 3.9$ psia; (2) saturation liquid and vapor enthalpies as functions of saturation pressure in the above range, and hence from enthalpies of liquid-vapor mixtures using the vapor fraction; (3) subcooled liquid enthalpy as a function of temperature in the range $32 < T < 230$°F; and (4) superheated vapor enthalpy as a function of temperature.

6.4 LiBr-H_2O-NH_3 SOLUTION (CODE 4)

The ternary solution is a rather complex fluid involving one nonvolatile (LiBr) and one volatile (H_2O) absorbent. The solution's vapor is an ammonia-water mixture (code 2) that, while in equilibrium with the ternary liquid, is generally superheated in NH_3-H_2O terms. The properties in the data base are for a solution with 60% : 40% LiBr-H_2O ratio by weight, with an amount of NH_3 varying from 0% to 100% of the solution content. The properties of this solution were measured and documented by Radermacher [14] and were fitted into mathematical equations consistent with the H_2O-NH_3 and LiBr-H_2O data described earlier.

Subroutine EQB4 for the ternary mixture supplies the following property data: (1) equilibrium temperature as a function of pressure in the range $10 < P < 500$ psia and NH_3 mass concentration in the entire range, (2) liquid enthalpy as a function of temperature in the range $0° < T < 600$°F and NH3 mass concentration in the entire range, (3) ammonia concentration in

the ammonia-water vapor as a function of temperature and pressure in the above ranges, and (4) vapor enthalpy as a function of the same.

6.5 $LiBr/ZnBr_2$-CH_3OH SOLUTION (CODE 5)

This solution employs a salt mixture as a non-volatile absorbent for the methanol (code 6) absorbate. The properties in the database are for a solution with an equal number of moles of LiBr and $ZnBr_2$. The properties of this solution were measured by Renz [16] and Uemura [17] and further extended and correlated by Biermann [18].

Subroutine EQB5 for this solution supplies the following property data: (1) equilibrium temperature as a function of salt mass concentration in the range $30\% < C < 45\%$ and methanol vapor pressure in the range $0.1 < P < 100$ kPa and (2) liquid solution enthalpy as a function of salt concentration in the above range and solution temperature in the range $-10 < T < 120$°C.

6.6 CH_3OH LIQUID AND VAPOR (CODE 6)

As a pure substance, functional relations for methanol do not include concentration. Properties in the subcooled, saturated, and superheated ranges were compiled and calculated by Biermann [18] from data measurements by Gibbard and Creek [19].

Subroutine EQB6 for methanol supplies the following property data: (1) saturation temperature as a function of pressure in the range $10 \le P \le 100$ kPa; (2) saturation liquid and vapor enthalpies as functions of saturation pressure in the above range, and hence from enthalpies of liquid-vapor mixtures using the vapor fraction; (3) subcooled liquid enthalpy as a function of temperature in the range $288 \le T \le 338$°K; and (4) superheated vapor enthalpy as a function of temperature and pressure.

6.7 $LiNO_3/KNO_3/NaNO_3$-H_2O SOLUTION (CODE 7)

This solution employs a mixture of three nitrate salts as a nonvolatile absorbent of water for high temperature lifts beyond the range accessible by LiBr-H_2O. The solution was studied by Davidson and Erickson [20] who found an optimum ratio of the nitrate salts at 53 weight percent $LiNO_3$, 28 weight percent KNO_3 and 19 weight percent $NaNO_3$. Their property measurements were fitted into mathematical formulas [21] consistent with the properties of pure H_2O (code 3).

Subroutine EQB7 for the ternary nitrate solution supplies the following property data:

(1) equilibrium temperature as a function of salt mass concentration in the range $70\% \leq C \leq 92.5\%$ and water vapor pressure in the range $0.01 \leq P \leq 220$ psia and (2) liquid solution enthalpy as a function of salt concentrations in the above range and solution temperature in the range $75 \leq T \leq 2.75^{\circ}C$.

7. THE SOLVER

In previous chapters we have described the process by which the physical behavior of the absorption system to be simulated is translated by the code into governing equations. The equations are expressed in the form of functions that have residuals at the solution that are to cancel. Some of the equations are highly nonlinear, and the set therefore has more than one mathematical solution. Also, the code often generates redundant equations because of multiple mass balances from different units within a closed loop. It is therefore necessary to (1) identify and eliminate redundant equations, (2) apply constraints to direct the solution-finding routine away from the physically unacceptable solutions, and (3) converge to a solution by reducing the residuals to a specified tolerance.

Redundant equations could be avoided if a solution method that could manage an over-determined system were chosen. Such methods use an optimizer instead of an equation solver, which minimizes an objective function, including the residuals in some form (e.g., the sum of their squares). When a solution does not exist, the objective function does not become zero but rather represents a "best attempt" to satisfy all the equations. Furthermore, a constrained optimizer method could be employed that would select the physically acceptable solution from the multitude of mathematical solutions.

The main drawback of an optimizer for the present code is that it can, without being detected, converge and provide a physically erroneous result in an under-determined system. This would happen, for example, if the user made a mistake in preparing the input and did not provide enough information. A solver, on the other hand, would not converge if it had more unknowns than equations.

The present version of the code employs the routine HYBRID1 that Powell [22,23] designed to solve an unconstrained fully determined system of nonlinear equations. The routine begins from an initial guess supplied for all the unknowns and searches for the solution by taking successive steps of restricted size toward it. The search direction is determined at each step using the Levenberg-Marquardt algorithm, which combines the Newton-Raphson and steepest-descent approaches. This makes it possible to avoid complications due to singular Jacobians. The routine returns the current values of the unknown variables after each step, which makes it possible to evaluate the residuals. Convergence is considered successful when the routine is able to satisfy either or both of the following conditions in less than the maximum number of iterations allowed by the user: (1) the Euclidian norm of the residuals is less than the user-supplied tolerance FTOL and (2) the difference between two successive iterations is less than the user-supplied tolerance XTOL. When terminated, the routine returns a convergence code indicating the status of the solution.

HYBRID 1 operates in an unconstrained manner, and constraints directing it toward the physical solution have to be applied externally. As mentioned earlier, the constraints in this program are linear inequalities concerning the temperature values at different state points in the simulated system. As described in Sect. 4, they are defined internally in each unit subroutine to ensure a physically meaningful temperature distribution in the unit.

The constraints are applied in the code in two stages: once in a preprocessor of the input to modify the initial guess for temperatures and to provide the solver with an improved starting point; and again after each step taken by the solver toward the solution. The intermediate values of the unknown variables returned by HYBRID 1 are examined in light of the constraints after each step, and any noncomplying temperature value is changed to a permissible one. The procedure interferes with the normal course the system would have taken in an unconstrained manner and forces it toward the physically meaningful solution.

The constraint enforcement is handled in the code by calling subroutine CONS. Any noncomplying state point temperature value is shifted by a certain measure, specified in the code. The shifting is done by either adding the above measure to a value too small, subtracting it from a value too large, or executing a combination of both until the inequality constraint is satisfied. This approach, although somewhat heuristic, sufficed.

The matter of redundant equations is handled by subroutine REDUN. It should be noted that the system is never truly overdetermined when the problem is correctly specified; the set includes redundant but not conflicting equations. The mass conservation equations from all units are separated from the other equations and placed at the end of the equation array. Because each mass balance equation is linear, it is possible to replace each one with a linear combination of itself and the others. Because the redundant equations in the system come from the linear (mass conservation) ones, it is possible to properly eliminate some of the linear equations that have indexes that exceed the number of unknowns. This is done by adding each one to all the preceding linear equations and then discarding it, without loss of information.

Having dealt with the requirements stated at the outset, the solver is supplied with a fully determined, well defined set of equations and a feasible starting value. Moreover, the solver is guided by the external constraint enforcement to a physical solution, while the iterations are confined to the feasible region.

8. RESULTS AND VALIDATION

Prior to using the program extensively for analysis of various advanced cycles, several initial validation runs were made against experimental data derived from working absorption systems. Unfortunately, well-documented data are quite scarce. The literature describes a number of absorption systems developed during the past decade, but only limited information is given on their heat transfer characteristics, and test data are confined to a narrow range around the design point. Experimental data for our validation of the program were selected from measurements on a lithium bromide–water heat transformer for upgrading waste heat that was developed and tested extensively at Oak Ridge National Laboratory [24]. Seventy-three experimental runs were documented during which the machine had operated under steady-state, stable conditions for one to eight hours. The results of the validation have been described in detail in ref. [7]. Very good agreement was obtained between the simulation and experimental results.

The program has been used to simulate a variety of cycles of interest with the working fluids presently in the data base. Some typical results are given in Appendix B. Among the cycles simulated are a single-stage heat transformer (see Appendix B, Fig. B.1) with LiBr-H_2O, H_2O-NH_3, LiBr/H_2O-NH_3, LiBr/$ZnBr_2CH_3OH$ and ternary nitrate-water; a single-stage chiller (see Appendix B, Fig. B.2) with all the above fluids; a single-stage chiller with a rectifier (see Appendix B, Fig. B.3) for H_2O-NH_3; a double-stage heat transformer (see Appendix B, Fig. B.4) with LiBr-H_2O; a double-effect chiller (see Appendix B, Fig. B.5) with LiBr-H_2O. Other systems, not shown here, that involve various variations of the above have been simulated successfully.

In preparing the input for a particular system, the user must supply those operating parameters that would be fixed in a real situation by the operator of a machine. These parameters include the external flows, inlet temperatures, and rates of pumps forming part of the system. For example, in the single stage chiller of Fig. B.2, the input must include the flow rate and inlet temperature of chilled water to the evaporator, cooling water to the absorber and condenser, and hot water or steam to the desorber, as well as the solution pumping rate. Over- or underspecification would lead to nonconvergence. Our experience has shown that in most cases, many of these fixed parameters may be traded off against other variables, one for one, and convergence may still be obtained. In the above example, the user may choose to fix both inlet and outlet chilled water temperatures and let the computer calculate the flow rate.

The code was found to be quite robust with all the above systems. Run times are on the order of several seconds on a mainframe computer such as an IBM 3081. Most systems with a working fluid involving a nonvolatile absorbent usually converge without difficulty; some problems are still encountered concerning fluids with a volatile absorbent such as H_2O-NH_3

because of the complex behavior of these materials at large concentrations of the volatile component in the vapor phase. Efforts are now under way to overcome these problems.

9. CONCLUSIONS

A computer code has been developed for simulating absorption systems in a flexible, modular form. The code can simulate systems in various cycle configurations and with different working fluids.

A modular program structure has been developed for this purpose. The program has been used successfully to simulate several advanced cycles and has been validated against experimental test results.

10. REFERENCES

1. G. C. Vliet, M. B. Lawson, and R. A. Lithgow, "Water-Lithium Bromide double effect absorption cooling cycle analysis," *ASHRAE Transactions* **88**(pt. 1), 811–23 (1982).

2. J. C. V. Chinnappa and H. A. Martin, "Dual Mode Operation by Solar Energy of an Ammonia-Water Two-Stage Cycle: A Comparative Study," *Solar Energy* **18**, 337–42 (1976).

3. G. Grossman, et al., "Solar Powered Environment Control Criteria and Realization," *Proceedings, the 1979 International Solar Energy Society Conference*, Atlanta, Georgia, May 1979, K. W. Boer and B. H. Glenn, eds. ,vol.1, 720–24, Pergamon Press, 1979.

4. G. Grossman and K. W. Childs, "Computer Simulation of a Lithium Bromide–Water Absorption Heat Pump for Temperature Boosting," *ASHRAE Transactions* **89**(pt. 1b), 240–48 (1983).

5. M. O. McLinden and S. A. Klein, "Steady State Modeling of Absorption Heat Pumps with a Comparison to Experiments," *ASHRAE Transactions* **91**(pt. 2b) 1793–1807 (1985).

6. H. Perez-Blanco and M. R. Patterson, *Conceptual Design and Optimization of a Versatile Absorption Heat Transformer*, ORNL/TM-9841, Oak Ridge National Laboratory, Oak Ridge, Tenn. (1986).

7. G. Grossman and E. Michelson, "A Modular Computer Simulation of Absorption Systems," *ASHRAE Transactions* **91**(pt. 2b), 1808–27 (1985).

8. G. Grossman, "Adiabatic Absorption and Desorption for Improvement of Temperature-Boosting Absorption Heat Pumps," *ASHRAE Transactions* **88**(pt. 2), 359–67 (1982).

9. L. A. McNeely, "Thermodynamic Properties of Aqueous Solutions of Lithium Bromide," *ASHRAE Transactions* **85**(pt. 1), 413–34 (1979).

10. American Society of Heating, Refrigerating, and Air Conditioning Engineers (ASHRAE), "Equilibrium Charts for Aqueous Lithium Bromide Solutions," *ASHRAE Handbook of Fundamentals*, pp. 16.81–2 (1977).

11. B. H. Jennings, "The Thermodynamic Properties of Ammonia-Water Mixtures: A Reassessment in Tabular Form," *ASHRAE Transactions* **87**(pt. 2), 419–33 (1981).

12. R. A. Macriss, et al., "Physical and Thermodynamic Properties of Ammonia Water Mixtures," *Research Bulletin No. 34*, Institute of Gas Technology, Chicago (1964).

13. American Society of Heating, Refrigerating, and Air Conditioning Engineers (ASHRAE), "Thermodynamic Properties of Water," *ASHRAE Handbook of Fundamentals*, pp. 6.7–12 (1977).

14. R. Radermacher, *Working Fluid Combinations for Absorption Heat Pumps*, Doctoral Dissertation, the Technical University of Munich (1981). [Also, R. Radermacher and G. Alefeld, Lithium-Wasser-Losungen als Absorber fur Ammoniak oder Methylamin, *Brennst-Warme-Kraft* **34**(nr. 1), 31 (1982)].

15. M. Renz, "Thermodynamische Eigenschaften des Temaren Stoffssystems Methanol-Lithium Bromide-Zinc Bromide," *Ki Klima Kalte Heizung* **9**, p. 411 (1981).

16. T. Uemura and S. Hasaba, "Studies on the Methanol-Lithium Bromide-Zinc Bromide Absorption Refrigerating Machine," *Reito* **44**, p. 720 (1969).

17. W. J. Biermann, *Advanced Absorption Heat Pump Cycles*, ORNL/Sub/81-17499/1, Oak Ridge National Laboratory, Oak Ridge, Tenn. (1984).

18. H. F. Gibbard and J. L. Creek, "Vapor Pressure Data of Methanol from 288.15 to 337.65 K," *J. Chem. Eng. Data* **19**, p. 308 (1974).

19. W. F. Davidson and D. C. Erickson, *New High Temperature Absorbent for Absorption Heat Pumps*, ORNL/Sub/815-22013/1, Oak Ridge National Laboratory, oak Ridge, Tenn. (1986). [Also *Proceedings, 81st Annual Industrial Energy Technology Conference, Houston, Texas, June 17-19,1986*, vol.1, pp. 350-8.

20. M. R. Ally, *Thermodynamic Properties of Aqueous Ternary Solutions Relevant to Chemical Heat Pumps*, ORNL/TM-10258, Oak Ridge National Laboratory, Oak Ridge, Tenn. (1987).

21. M. J .D. Powell, "A Hybrid Method for Nonlinear Equations," *Numerical Methods for Non-Linear Algebraic Equations*, P. Rabinowitz, ed., Gordon and Breach, London, pp. 87-114 (1970).

22. M. J .D. Powell, "A FORTRAN Subroutine for Solving Systems of Nonlinear Algebraic Equations," *Numerical Methods for Non-Linear Algebraic Equations*, P. Rabinowitz, ed., Gordon and Breach, London, pp. 115-61 (1970).

23. W. R. Huntley, "Performance Test Results of an Absorption Heat Pump Using Low Temperature (60°C) Industrial Waste Heat," *Proceedings, the 18th Intersociety Energy Conservation Engineering Conference (IECEC), Orlando, Florida, August 1983* **4**, 1921-6 (1983). [Also, ORNL/TM-9072, Oak Ridge National Laboratory, Oak Ridge, Tenn. (1984)].

APPENDIX A: MATERIAL PROPERTIES

This appendix contains the equations used in the program to calculate the properties of the different working fluids.

A.1 LiBr-H_2O SOLUTION

A.1.1 Solution Temperature

The solution temperature equation is

$$T(^{\circ}\mathrm{F}) = A \times T_{sat} + B,$$

where

$T_{sat} = 101.74 + 0.0275 \times P + 33.435 \times D + 2.2365 \times D^2 + 0.162 \times D^3 + 0.0136 \times D^4$;

$D = \ln(P)$;

for $A = \sum_{i=0}^{3} A_i C^i$,

$A_0 = -2.00755$,

$A_1 = +1.6976 \times 10^{-1}$,

$A_2 = -3.133362 \times 10^{-3}$,

$A_3 = +1.97668 \times 10^{-5}$;

for $B = \sum_{i=0}^{3} B_i C^i$,

$B_0 = +3.21128 \times 10^{2}$,

$B_1 = -1.9322 \times 10^{1}$,

$B_2 = +3.74382 \times 10^{-1}$,

$B_3 = -2.0637 \times 10^{-3}$;

T is the solution temperature in °F— the formula is valid for $40^{\circ}\mathrm{F} \le T \le 350^{\circ}\mathrm{F}$;

T_{sat} is the water saturation temperature that corresponds to the vapor pressure in °F— the formula is valid for $60^{\circ}\mathrm{F} \le T_{sat} \le 300^{\circ}\mathrm{F}$;

C is the percent weight of LiBr/solution for solution concentrations between weight percents 45 and 70;

P (psia) is the pressure— the formula is valid for 0.08 psia $\le P \le$ 3.9 psia.

A.1.2 Solution Enthalpy

The solution enthalpy equation is

$$h\,(\text{Btu/lb solution}) = A + BT + CT^2\,,$$

where,

for $A = \sum_{i=0}^{4} A_i C^i$,

$A_0 = -1.01507 \times 10^3$,

$A_1 = +7.95387 \times 10^1$,

$A_2 = -2.3358016$,

$A_3 = +3.031583 \times 10^{-2}$,

$A_4 = -1.400261 \times 10^{-4}$;

for $B = \sum_{i=0}^{4} B_i C^i$,

$B_0 = +4.68108$,

$B_1 = -3.037766 \times 10^{-2}$,

$B_2 = +8.44845 \times 10^{-3}$,

$B_3 = -1.047721 \times 10^{-4}$,

$B_4 = +4.80097 \times 10^{-7}$;

for $C = \sum_{i=0}^{4} C_i C^i$,

$C_0 = -4.9107 \times 10^{-3}$,

$C_1 = +3.8384 \times 10^{-4}$,

$C_2 = -1.078963 \times 10^{-5}$,

$C_3 = +1.3152 \times 10^{-7}$,

$C_4 = -5.897 \times 10^{-10}$;

h (Btu/lb solution) is the specific solution enthalpy,

T is the solution temperature in °F— the formula is valid for $40°F \le T \le 350°F$.

A.2 H_2O-NH_3 LIQUID AND VAPOR

Data for this material are available in tabular form.

A.3 H_2O LIQUID AND VAPOR

A.3.1 Saturation Temperature

The saturation temperature equation is

$$T_{sat}(^{\circ}\mathrm{F}) = 1.0174\times10^{2} + 2.75\times10^{-2}\times P + 3.34351\times10^{1}\ln P + 2.2365\ln^{2}P + 1.621\times10^{-1}\ln^{3}P + 1.36\times10^{-2}\ln^{4}P,$$

where

$T_{sat}(^{\circ}\mathrm{F})$ is the saturation temperature corresponding to vapor pressure;

P (psia) is the vapor pressure—the formula is valid for 0.06 psia $\leq P \leq$ 3.9 psia.

A.3.2 Saturation Enthalpies

The saturation enthalpies are

$$H_{l}\,(\mathrm{Btu/lb}) = 6.967\times10^{1} + 5.68\times10^{-2}\times P + 3.3305\times10^{1}\ln P + 2.2236\ln^{2}P + 1.71\times10^{-1}\ln^{3}P + 1.255\times10^{-2}\ln^{4}P$$

and

$$H_{g}\,(\mathrm{Btu/lb}) = 1.10525\times10^{3} - 2.89\times10^{-2}\times P + 1.452\times10^{1}\ln P + 9.19\times10^{-1}\ln^{2}P + 7.8\times10^{-3}\ln^{3}P - 4.9\times10^{-3}\ln^{4}P,$$

where H_l is the specific saturated liquid enthalpy and H_g is the specific saturated vapor enthalpy. In the saturated region,

$$H\,(\mathrm{Btu/lb}) \text{ equals } w\times H_{g} + (1-w)\times H_{l},$$

where w is the vapor mass fraction.

A.3.3 Subcooled Region Enthalpies ($w = 0.0$; $T < T_{sat}$)

The subcooled region enthalpy equation is

$$H(\text{Btu/lb}) = 9.8217522\,T + 6.851 \times 10^{-5} T^2 - 3.108984774 \times 10^{1}$$

and is valid for the range $32^{\circ}\text{F} \le T \le 230^{\circ}\text{F}$.

A.3.4 Superheated Region Enthalpy ($w = 1.0$; $T > T_{sat}$)

The superheated region enthalpy equation is

$$H(\text{Btu/lb}) = H_g + 0.45\,(T - T_{sat}) .$$

A.4 LiBr-H_2O-NH_3 SOLUTION

A.4.1 Solution Temperature

The solution temperature equation is

$$T(^{\circ}\text{F}) = A + B \times DPF ,$$

where

$DPF = 4.04397 \times 10^3/(1.33014 \times 10^1 - \ln P) - 4.09 \times 10^2$;

for $A = \sum_{i=0}^{4} A_i (1 - C)^{i+1}$,

$A_0 = +1.56085 \times 10^2$,

$A_1 = -4.92398 \times 10^2$,

$A_2 = +2.55252 \times 10^3$,

$A_3 = +2.96947 \times 10^3$,

$A_4 = +1.109756 \times 10^3$;

for $B = \sum_{i=0}^{4} B_i (1 - C)^{i}$,

$B_0 = +1.0$,

$B_1 = -9.9352 \times 10^{-1}$,

$B_2 = +3.79108$,

$B_3 = -2.09462$,

$B_4 = -1.1414 \times 10^{-1}$;

T (°F) is the liquid solution temperature;

C (weight percent NH_3/solution) is the concentration;

DPF(°F) is the solution saturation temperature (H_2O/60% LiBr)—the formula is valid for the range 10 psia ≤ P ≤ 500 psia.

A.4.2 Solution Enthalpy

The solution enthalpy equation is

$$H_l\,(\text{kJ/mol}) = A + BT + CT^2\ ,$$

where

$$A = \sum_{i=0}^{3} A_i X_m^i\ ;$$

$$B = \sum_{i=0}^{3} B_i X_m^i\ ;$$

$$C = \sum_{i=0}^{3} C_i X_m^i\ ;$$

for $0.6 \le X_m \le 1.0$,

$A_0 = -2.86006 \times 10^1$,

$A_1 = +1.38294 \times 10^2$,

$A_2 = -1.95754 \times 10^2$,

$A_3 = +1.01938 \times 10^2$,

$B_0 = -1.99637 \times 10^{-1}$,

$B_1 = +1.02884$,

$B_2 = -1.32152$,

$B_3 = +5.70469 \times 10^{-1}$,

$C_0 = +2.53965 \times 10^{-3}$,

$C_1 = -9.39951 \times 10^{-3}$,

$C_2 = +1.1557 \times 10^{-2}$,

$C_3 = -4.6076 \times 10^{-3}$;

for $0 \le X_m \le 0.6$,

$A_0 = +8.806$,

$A_1 = -5.8289$,

$A_2 = +7.2631$,

$A_3 = 0.0$,

$B_0 = +6.7384 \times 10^{-1}$,

$B_1 = -1.2632 \times 10^{-1}$,

$B_2 = +1.4821 \times 10^{-2}$,

$B_3 = 0.0$,

$C_0 = -8.7728 \times 10^{-6}$,

$C_1 = +1.21815 \times 10^{-4}$,

$C_2 = +2.374 \times 10^{-6}$,

$C_3 = 0.0$;

T is the solution temperature in °C– the formula is valid for the range $0°F \leq T \leq 600°F$;

X_m is the molal NH_3 concentration in the NH_3/H_2O solution, expressed in terms of the concentration C of NH_3 in the ternary mixture NH_3-H_2O/60% LiBr:

$$X_m = \frac{X_L}{[X_L + (1 - X_L) \times 0.945382]} \quad \text{and}$$

$$X_L = \frac{C}{0.6C + 0.4}$$

(X_L is the NH_3 weight concentration in NH_3/H_2O solution);

H_1 (Btu/lb) = H_1 (kJ/mol)/($M \times 2.326 \times 10^{-3}$), where M is a molar-mass conversion factor and

$$M = \frac{[17.032X_m + 2.5(1 - X_m) \times 18.016]}{1 + 1.5(1 - X_m) \times 1806/86.856]}.$$

The result received tends to deviate from Radermacher's measurements, and is accordingly corrected by

$$H_1 \text{ (Btu/lb)} = H_1 \text{ (Btu/lb)} - 276.1 \times C - 125.0.$$

A.4.3 Vapor NH_3 Concentration

The vapor NH_3 concentration equation is

$$C_m \text{ (mol } NH_3\text{/mol solution vapor)} = 1 - (1 - X_m)^{[A + B(1 - Xm) + C(1 - Xm)2]},$$

where,

$$\text{for } A = \sum_{i=0}^{2} A_i (\ln P)^i ,$$

$A_0 = +20.6091$,

$A_1 = -8.11881$,

$A_2 = +1.04895$;

$$\text{for } B = \sum_{i=0}^{2} B_i (\ln P)^i ,$$

$B_0 = -42.6785$,

$B_1 = +22.3016$,

$B_2 = -2.97371$;

$$\text{for } C = \sum_{i=0}^{2} C_i (\ln P)^i ,$$

$C_0 = +31.0596$,

$C_1 = -16.4635$,

$C_2 = +2.06656$;

$$C_w \text{ (lb } NH_3\text{/lb solution vapor)} = \frac{C_m}{[C_m + (1 - C_m) \times 1.0578]} .$$

A.4.4 Vapor Enthalpy.

Vapor enthalpy depends on vapor pressure, temperature, and vapor NH_3 molal concentration (C_m). The enthalpy for each vapor component (NH_3 and H_2O) is computed separately and depends on the partial pressure,

$$P_{NH_3}(\text{psia}) = P_{total}(\text{psia}) \times C_m \quad \text{and}$$

$$P_{H_2O}(\text{psia}) = P_{total}(\text{psia}) \times (1 - C_m) .$$

The combined overall vapor enthalpy depends on the relative weight concentrations:

$$H_{NH_3}(\text{Btu/lb}) = A + BT + CT^2 - 77.9 ,$$

where

$$A = \sum_{i=0}^{2} A_i P(i/NH_3) ,$$

$A_0 = +6.21098 \times 10^{2}$,

$A_1 = -2.93663 \times 10^{-1}$,

$A_2 = +5.07537 \times 10^{-5}$,

$B = \sum_{i=0}^{2} B_i P(i/NH_3)$,

$B_0 = +5.04312 \times 10^{-1}$,

$B_1 = +1.43451 \times 10^{-3}$,

$B_2 = -1.04291 \times 10^{-6}$,

$C = \sum_{i=0}^{2} C_i P(i/NH_3)$,

$C_0 = +3.24743 \times 10^{-5}$,

$C_1 = -2.00178 \times 10^{-6}$,

$C_2 = +2.52943 \times 10^{-9}$;

$$H_{H_2O}(\text{Btu/lb}) = A + BT + CT^2 ,$$

where

$A = \sum_{i=0}^{2} A_i P(i/H_2O)$,

$A_0 = +1.06031 \times 10^{2}$,

$A_1 = -7.88073 \times 10^{-1}$,

$A_2 = -5.81695 \times 10^{-5}$,

$B = \sum_{i=0}^{2} B_i P(i/H_2O)$,

$B_0 = +4.46254 \times 10^{-1}$,

$B_1 = +2.60441 \times 10^{-3}$,

$B_2 = -8.45853 \times 10^{-7}$,

$C = \sum_{i=0}^{2} C_i P(i/H_2O)$

$C_0 = +1.91856 \times 10^{-5}$,

$C_1 = -2.40891 \times 10^{-6}$,

$C_2 = +1.73681 \times 10^{-9}$;

and

$$H_{V_{total}}(\text{Btu/lb}) = C_w H_{NH_3} + (1 - C_w) H_{H_2O}.$$

A.5 $ZnBr_2$/LiBr-CH_3OH SOLUTION

$ZnBr_2$ and LiBr are present in equal moles. Concentration in this solution hence will be defined as $ZnBr_2$/LiBr to solution mass ratio.

A.5.1 Solution Temperature

The solution temperature equation is

$$T(^\circ\text{C}) = (T_{sat} - B)/A,$$

where,

for $A = \sum_{i=0}^{3} A_i C^i$,

$A_0 = +1.19397$,

$A_1 = -1.0993 \times 10^{-2}$,

$A_2 = +2.0436 \times 10^{-4}$,

$A_3 = -1.7046 \times 10^{-6}$;

for $B = \sum_{i=0}^{3} B_i C^i$,

$B_0 = -1.3184 \times 10^{2}$,

$B_1 = +7.2141$,

$B_2 = -1.19174 \times 10^{-1}$,

$B_3 = +4.7409 \times 10^{-4}$;

T (°C) is the solution temperature;

T_{sat} (°C) is the CH_3OH saturation temperature corresponding to vapor pressure (kPa)— the formula is valid for the range 0.2 kPa ≤ P ≤ 100 kPa;

C is the solution concentration and is valid for the range 30 weight percent ≤ C ($ZnBr_2$/LiBr weight percent in solution) ≤ 45 weight percent.

A.5.2 Solution Enthalpy

The solution enthalpy equation is

$$H(\text{kJ/kg}) = A + B \times C + G \times C^2 + D \times C^3 + E \times C^4 ,$$

where,

for $A = \sum_{i=0}^{3} A_i T^i$,

$A_0 = -4.79 \times 10^2$,

$A_1 = +4.52885$,

$A_2 = -7.2659 \times 10^{-3}$,

$A_3 = +2.21542 \times 10^{-5}$;

for $B = \sum_{i=0}^{3} B_i T^i$,

$B_0 = +3.652591 \times 10^1$,

$B_1 = -1.943945 \times 10^{-1}$,

$B_2 = +6.981242 \times 10^{-4}$,

$B_3 = -1.525332 \times 10^{-6}$;

for $C = \sum_{i=0}^{3} C_i T^i$,

$C_0 = -9.7616 \times 10^{-4}$,

$C_1 = +4.5588 \times 10^{-3}$,

$C_2 = -2.0259 \times 10^{-5}$,

$C_3 = +3.596168 \times 10^{-8}$;

for $D = \sum_{i=0}^{3} D_i T^i$,

$D_0 = 1.085991 \times 10^{-2}$,

$D_1 = -5.048672 \times 10^{-5}$,

$D_2 = +2.60703 \times 10^{-7}$,

$D_3 = -4.2877221 \times 10^{-10}$;

for $E = \sum_{i=0}^{3} E_i T^i$,

$E_0 = -3.78606 \times 10^{-5}$,

$E_1 = +1.996746 \times 10^{-7}$,

$E_2 = -1.1892 \times 10^{-9}$,

$E_3 = +1.9653662 \times 10^{-12}$;

T (°C) is the solution temperature—the formula is valid for the range $-10°C \leq T \leq 120°C$.

A.6 CH_3OH LIQUID AND VAPOR

A.6.1 Saturation Temperature

The saturation temperature is

$$T_{sat}(°K) = [3.9577 \times 10^{-3} - 2.091354 \times 10^{-4} \ln P - 1.5002 \times 10^{-6} \ln^2 P]^{-1} ,$$

where

T_{sat} (°K) is the CH_3OH saturation temperature,

P (kPa) is the pressure—the formula is valid for the range $0.1 \text{ kPa} \leq P \leq 100 \text{ kPa}$.

A.6.2 Saturation Enthalpies

The saturation enthalpy equations are

$$H_l (\text{kJ/kg} \times \text{mol}) = AT + BT^2 + CT^3 ,$$

where

$A = 7.684 \times 10^1$,

$B = 8.15 \times 10^{-2}$,

$C = -7.8667 \times 10^{-5}$;

and

$$H_l (\text{Btu/lb}) = H_l (\text{kJ/kg mol})/7.452504 \times 10^1 ,$$

where

H_l is the specific saturated liquid enthalpy,

T is the saturation temperature, corresponding to the vapor pressure, in °F.

Using Clapeyron's equation, evaporation heat is estimated by

$$H_{fg}\,(\text{kJ/kg mol}) = P\frac{d(\ln P)}{dT} \times T \times (V_g - V_l)\ ,$$

where

T (°K) is the saturation temperature,

V_g (L/mol) is the saturation vapor specific volume,

P (kPa) is the pressure,

V_l (L/mol) is the saturation liquid specific volume,

$$\frac{d(\ln P)}{dT} = \frac{2.845921 \times 10^3}{T^2} + \frac{2 \times 3.74341546 \times 10^5}{T^3} + \frac{3 \times 2.1887 \times 10^7}{T^4},$$

$$V_g = \frac{RT}{P} + B + DP^2\ ,$$

$$B = -0.1 - 2.148 \times 10^{-3} \exp\frac{1.986}{T}\ ,$$

$$D = -8.1297 \times 10^{-19}\ \exp\frac{1.075 \times 10^4}{T},$$

$$R\,(\text{kJ/kg} \times \text{mol} \times {}^\circ\text{K}) = 8.3143\ ,$$

$$V_l = 32.04 \times (1077.2 - 0.97635 \times T)^{-1}\ ,$$

H_g (kJ/kg × mol) is the saturated vapor enthalpy,

$$H_g = H_l + H_{fg},$$

$$H_g\,(\text{Btu/lb}) = H_g(\text{kJ/kg} \times \text{mol})/7.452504 \times 10^1,$$

ln is the saturated region,

H (Btu/lb) = $H_l \times (1 - w) - H_g \times w$, where w is the vapor mass fraction.

A.6.3 Subcooled Region Enthalpy ($w = 0.0$; $T < T_{sat}$)

The subcooled region enthalpy equation is

$$H\,(\text{Btu/lb}) = H_l(T)$$

and is valid for the range 288°K ≤ T ≤ 338°K.

A.6.4 Superheated Region Enthalpy ($w = 1.0$; $T > T_{sat}$)

The superheated region enthalpy equation is

$$H\,(\text{Btu/lb}) = H_g + 0.32722\,(T - T_{sat})\ ,$$

where T (°F) is the vapor temperature.

A.7 TERNARY NITRATE SOLUTION

The solution composition is 53 weight percent $LiNO_3$, 28 weight percent KNO_3, and 19 weight percent $NaNO_3$.

A.7.1 Solution Temperature

The solution temperature equation is

$$T = AT_{sat} + B\ ,$$

where,

for $A = \sum_{i=0}^{3} A_i C^i$,

$A_0 = -1.06$,

$A_1 = +1.021 \times 10^{-1}$,

$A_2 = -1.627 \times 10^{-3}$,

$A_3 = +8.931 \times 10^{-6}$;

for $B = \sum_{i=0}^{3} B_i C^i$,

$B_0 = +2.911 \times 10^{2}$,

$B_1 = -1.303 \times 10^{1}$,

$B_2 = +1.871 \times 10^{-1}$,

$B_3 = -7.877 \times 10^{-4}$;

T (°F) is the solution temperature;

T_{sat} (°F) is the water saturation temperature, corresponding to the vapor pressure, and is valid for the range $30°F \le T_{sat} \le 230°F$;

C is the mass concentration (weight percent nitrates to solution) and is valid for the range 70 weight percent $\le C <$ 92.5 weight percent.

A.7.2 Solution Enthalpy

The solution enthalpy equation is

$$H = AT + B,$$

where

for $A = \sum_{i=0}^{2} A_i C^i$,

$A_0 = +3.94516 \times 10^{2}$,

$A_1 = -8.64996$,

$A_2 = +6.2878 \times 10^{-2}$;

for $B = \sum_{i=0}^{2} B_i C^i$,

$B_0 = +3.88691 \times 10^{-1}$,

$B_1 = +3.02719 \times 10^{-3}$,

$B_2 = +3.80068 \times 10^{-5}$;

H (Btu/lb) is the liquid solution enthalpy;

T (°F) is the solution temperature—the formula is valid for the range $167°F \leq T \leq 527°F$.

APPENDIX B: RESULTS OF CALCULATIONS

The following tables and figures display data from and depict examples of various modeled cycles.

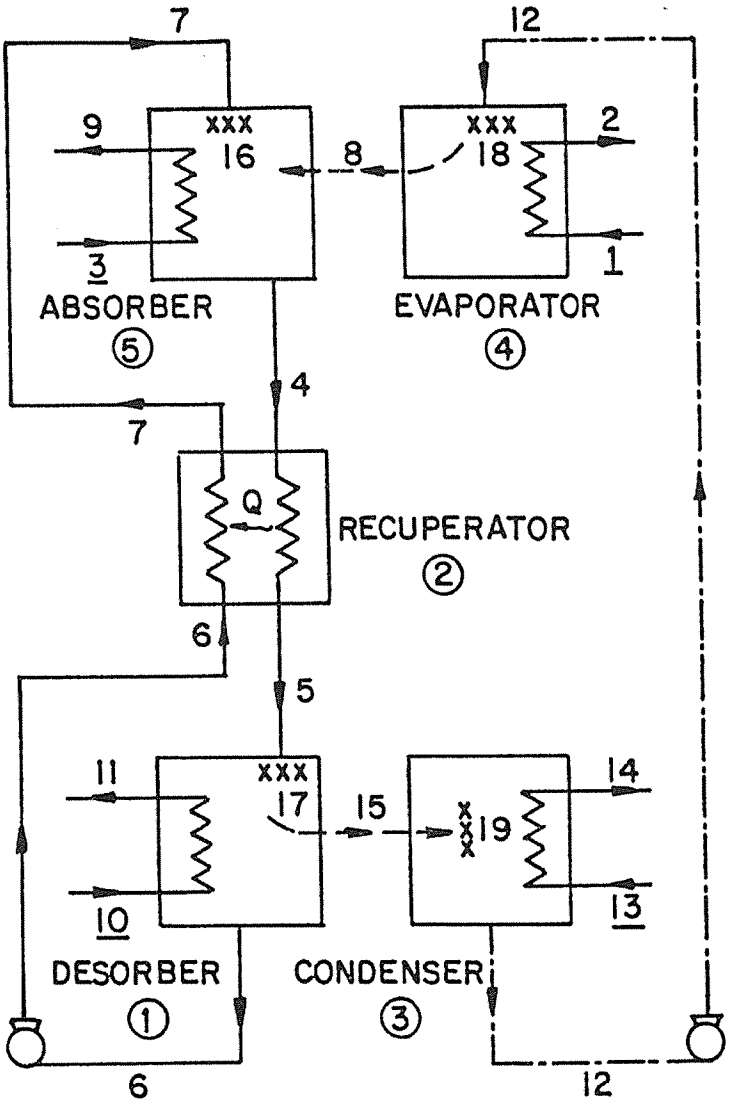

Fig. B.1. Single stage heat transformer.

Table B.1. Data for a single stage heat transformer LiBr-H_2O cycle (see Fig. B.1.)

```
SINGLE STAGE H.T. LIBR-H2O

 INPUT AND OUTPUT IN BRITISH UNITS

 THE BRITISH UNITS ARE :
 TEMPERATURES        (T)   IN  DEG F
 MASS FLOWS          (F)   IN  LB/MIN
 CONCENTRATION       (C)   IN  PERCENTS
 ENTHALPIES          (H)   IN  BTU/LB
 PRESSURES           (P)   IN  PSIA
 HEAT QUANTITIES     (Q)   IN  BTU/MIN

TOLERANCES IN F, X          1.0D-05       1.0D-08

NO. OF UNITS       5
NO. OF STATE POINTS      19

    1     2     2      0.6909    -1      0.0000
    5  15  10  11     6  17     0
    2     3     2      0.8327     1      0.0000
    6     7     4     5    0     0     0
    3     4     2      0.7997     1      0.0000
   15  12  13  14     19    0     0
    4     5     2      0.5998    -1      0.0000
   12     8     1     2  18    0     0
    5     1     2      0.9312     1      0.0000
    7     8     3     9    4   16     0

STARTING POINTS
    1     3    0 140.0    0   402.10    0    0.0    0    0.0    0    0.0
    2     3    1 100.0    0   402.10    0    0.0    0    0.0    0    0.0
    3     3    0 140.0    0    59.30    0    0.0    0    0.0    0    0.0
    4     1    1 100.0    3    10.00    3   45.0    3    3.0    0    0.0
    5     1    1 100.0    3    10.00    3   45.0    2    1.0    0    0.0
    6     1    2 100.0    0    23.70    2   50.0    2    1.0    0    0.0
    7     1    1 100.0    0    23.70    2   50.0    3    3.0    0    0.0
    8     3    3 100.0    2    10.00    0    0.0    3    3.0    0    1.0
    9     3    1 100.0    0    59.30    0    0.0    0    0.0    0    0.0
   10     3    0 140.0    0   118.60    0    0.0    0    0.0    0    0.0
   11     3    1 100.0    0   118.60    0    0.0    0    0.0    0    0.0
   12     3    4 100.0    2    10.00    0    0.0    3    3.0    0    0.0
   13     3    0  59.0    0   256.20    0    0.0    0    0.0    0    0.0
   14     3    1 100.0    0   256.20    0    0.0    0    0.0    0    0.0
   15     3    2 100.0    2    10.00    0    0.0    2    1.0    0    1.0
   16     1    1 100.0    0     1.00    1   48.0    3    3.0    0    0.0
   17     1    1 100.0    0     1.00    1   47.0    2    1.0    0    0.0
   18     3    3 100.0    2    10.00    0    0.0    3    3.0    0    0.0
   19     3    4 100.0    2    10.00    0    0.0    2    1.0    0    1.0
```

Table B.1 (continued)

LAST ITERATION NO. IS 74
IER = 1
EUCLIDEAN NORM OF FUN IS LESS THAN FTOL

STATE POINT	TEMPER.	ENTHALPY	FLOW RATE	CONCENTR.	PRESSURE	VAPOR FR.
1	1.4000D+02	1.0776D+02	4.0210D+02	0.0000D+00	0.0000D+00	0.0000D+00
2	1.3342D+02	1.0117D+02	4.0210D+02	0.0000D+00	0.0000D+00	0.0000D+00
3	1.4000D+02	1.0776D+02	5.9300D+01	0.0000D+00	0.0000D+00	0.0000D+00
4	1.7081D+02	7.0342D+01	2.6159D+01	4.7954D+01	2.1645D+00	0.0000D+00
5	1.3655D+02	5.1897D+01	2.6159D+01	4.7954D+01	3.8860D-01	0.0000D+00
6	1.2268D+02	4.7127D+01	2.3700D+01	5.2929D+01	3.8860D-01	0.0000D+00
7	1.6275D+02	6.7486D+01	2.3700D+01	5.2929D+01	2.1645D+00	0.0000D+00
8	1.2903D+02	1.1169D+03	2.4588D+00	0.0000D+00	2.1645D+00	1.0000D+00
9	1.8208D+02	1.5001D+02	5.9300D+01	0.0000D+00	0.0000D+00	0.0000D+00
10	1.4000D+02	1.0776D+02	1.1860D+02	0.0000D+00	0.0000D+00	0.0000D+00
11	1.1891D+02	8.6668D+01	1.1860D+02	0.0000D+00	0.0000D+00	0.0000D+00
12	7.2020D+01	4.0002D+01	2.4588D+00	0.0000D+00	2.1645D+00	0.0000D+00
13	5.9000D+01	2.7097D+01	2.5620D+02	0.0000D+00	0.0000D+00	0.0000D+00
14	6.9412D+01	3.7415D+01	2.5620D+02	0.0000D+00	0.0000D+00	0.0000D+00
15	1.2268D+02	1.1151D+03	2.4588D+00	0.0000D+00	3.8860D-01	1.0000D+00
16	1.8519D+02	7.8611D+01	2.3954D+01	5.2367D+01	2.1645D+00	0.0000D+00
17	1.0947D+02	3.7550D+01	2.5811D+01	4.8601D+01	3.8860D-01	0.0000D+00
18	1.2903D+02	9.6781D+01	2.4588D+00	0.0000D+00	2.1645D+00	0.0000D+00
19	7.2020D+01	1.0923D+03	2.4588D+00	0.0000D+00	3.8860D-01	1.0000D+00

THE EQUIVALENT HEAT TRANSFER QUANTITIES
FOR EVERY UNIT

NO.	TYPE	UA	EFF	CAT	LMTD
1	D	1.9268D+02	6.9090D-01	9.4360D+00	1.2981D+01
2	H	4.5104D+01	8.3270D-01	8.0514D+00	1.0698D+01
3	C	4.0824D+02	7.9970D-01	2.6079D+00	6.4755D+00
4	E	3.6857D+02	5.9980D-01	4.3900D+00	7.1845D+00
5	A	2.0749D+02	9.3120D-01	3.1087D+00	1.2076D+01

NO.	TYPE	HEAT TRANSFER	EQ. DEV.	IPINCH
1	D	2.5012D+03	0.000D+00	-1
2	H	4.8250D+02	0.000D+00	1
3	C	2.6435D+03	0.000D+00	1
4	E	2.6480D+03	0.000D+00	-1
5	A	2.5057D+03	0.000D+00	1

Table B.2. Data for a single stage heat transformer NH_3-LiBr/H_2O cycle (see Fig. B.1)

```
SINGLE STAGE H.T. NH3-LIBR/H2O

 INPUT AND OUTPUT IN BRITISH UNITS

 THE BRITISH UNITS ARE :
 TEMPERATURES        (T)   IN   DEG F
 MASS FLOWS          (F)   IN   LB/MIN
 CONCENTRATION       (C)   IN   PERCENTS
 ENTHALPIES          (H)   IN   BTU/LB
 PRESSURES           (P)   IN   PSIA
 HEAT QUANTITIES     (Q)   IN   BTU/MIN

TOLERANCES IN F, X          1.0D-05      1.0D-08

NO. OF UNITS      5
NO. OF STATE POINTS     19

    1     1     2     0.9231     1     0.0000
    7    8    3    9    4   16    0
    2     2     2     0.3363     1     0.0000
    5   15   10   11    6   17    0
    3     3     2     0.7185     1     0.0000
    6    7    4    5    0    0    0
    4     4     2     0.4381     1     0.0000
   15   12   13   14   19    0    0
    5     5     2     0.7835    -1     0.0000
   12    8    1    2   18    0    0

STARTING POINTS
    1     3    0 160.0    0   115.40    0    0.0    0    0.0    0    0.0
    2     3    1 120.0    0   115.40    0    0.0    0    0.0    0    0.0
    3     3    0 160.0    0   126.80    0    0.0    0    0.0    0    0.0
    4     4    1 120.0    3    30.00    4   65.0    3  240.0    0    0.0
    5     4    1 120.0    3    30.00    4   65.0    2  110.0    0    0.0
    6     4    2 120.0    0    27.50    2   55.0    2  110.0    0    0.0
    7     4    1 120.0    0    27.50    2   55.0    3  240.0    0    0.0
    8     2    1 120.0    2     2.50    3   99.0    3  240.0    0    1.0
    9     3    1 120.0    0   126.80    0    0.0    0    0.0    0    0.0
   10     3    0 160.0    0   184.40    0    0.0    0    0.0    0    0.0
   11     3    1 120.0    0   184.40    0    0.0    0    0.0    0    0.0
   12     2    1 120.0    2     2.50    3   99.0    2  110.0    0    0.0
   13     3    0  59.0    0   163.70    0    0.0    0    0.0    0    0.0
   14     3    1 120.0    0   163.70    0    0.0    0    0.0    0    0.0
   15     4    2 120.0    2     2.50    3   99.0    2  110.0    0    1.0
   16     4    1 120.0    0     1.00    1   56.0    3  240.0    0    0.0
   17     4    1 120.0    0     1.00    1   64.0    2  110.0    0    0.0
   18     2    1 120.0    2     2.50    3   99.0    3  240.0    0    0.0
   19     2    1 120.0    2     2.50    3   99.0    2  110.0    0    1.0
```

Table B.2 (continued)

LAST ITERATION NO. IS 80
IER = 1
EUCLIDEAN NORM OF FUN IS LESS THAN FTOL

STATE POINT	TEMPER.	ENTHALPY	FLOW RATE	CONCENTR.	PRESSURE	VAPOR FR.
1	1.6000D+02	1.2781D+02	1.1540D+02	0.0000D+00	0.0000D+00	0.0000D+00
2	1.3890D+02	1.0666D+02	1.1540D+02	0.0000D+00	0.0000D+00	0.0000D+00
3	1.6000D+02	1.2781D+02	1.2680D+02	0.0000D+00	0.0000D+00	0.0000D+00
4	1.6409D+02	-1.1150D+01	3.2275D+01	5.5067D+01	3.4655D+02	0.0000D+00
5	1.4531D+02	-2.6666D+01	3.2275D+01	5.5067D+01	1.5072D+02	0.0000D+00
6	1.3081D+02	-4.7970D+01	2.7500D+01	4.7282D+01	1.5072D+02	0.0000D+00
7	1.5472D+02	-2.9760D+01	2.7500D+01	4.7282D+01	3.4655D+02	0.0000D+00
8	1.4097D+02	5.6395D+02	4.7755D+00	9.9894D+01	3.4655D+02	1.0000D+00
9	1.7753D+02	1.4543D+02	1.2680D+02	0.0000D+00	0.0000D+00	0.0000D+00
10	1.6000D+02	1.2781D+02	1.8440D+02	0.0000D+00	0.0000D+00	0.0000D+00
11	1.4729D+02	1.1507D+02	1.8440D+02	0.0000D+00	0.0000D+00	0.0000D+00
12	7.9304D+01	5.2691D+01	4.7755D+00	9.9894D+01	1.5072D+02	0.0000D+00
13	5.9000D+01	2.7097D+01	1.6370D+02	0.0000D+00	0.0000D+00	0.0000D+00
14	7.4759D+01	4.2719D+01	1.6370D+02	0.0000D+00	0.0000D+00	0.0000D+00
15	1.3081D+02	5.8821D+02	4.7755D+00	9.9894D+01	1.5072D+02	1.0000D+00
16	1.7899D+02	-8.3367D+00	2.8529D+01	4.9181D+01	3.4655D+02	0.0000D+00
17	1.1603D+02	-5.2899D+01	3.0955D+01	5.3154D+01	1.5072D+02	0.0000D+00
18	1.3307D+02	1.1617D+02	4.7755D+00	9.9894D+01	3.4655D+02	0.0000D+00
19	9.4970D+01	5.6462D+02	4.7755D+00	9.9894D+01	1.5072D+02	1.0000D+00

THE EQUIVALENT HEAT TRANSFER QUANTITIES
FOR EVERY UNIT

NO.	TYPE	UA	EFF	CAT	LMTD
1	A	8.7493D+02	9.2310D-01	1.4604D+00	2.5540D+00
2	D	7.7788D+01	3.3630D-01	2.9186D+01	3.0216D+01
3	H	4.2631D+01	7.1850D-01	9.3677D+00	1.1747D+01
4	C	1.2624D+02	4.3810D-01	2.0212D+01	2.0258D+01
5	E	2.1880D+02	7.8350D-01	5.8306D+00	1.1159D+01

NO.	TYPE	HEAT TRANSFER	EQ. DEV.	IPINCH
1	A	2.2346D+03	0.000D+00	1
2	D	2.3504D+03	0.000D+00	1
3	H	5.0079D+02	0.000D+00	1
4	C	2.5573D+03	0.000D+00	1
5	E	2.4415D+03	0.000D+00	-1

Table B.3. Data for a single stage heat transformer $LiBr/ZnBr_2$-CH_3OH cycle (see Fig. B.1)

```
SINGLE STAGE H.T. LIBR/ZNBR2-CH3OH

 INPUT AND OUTPUT IN BRITISH UNITS

 THE BRITISH UNITS ARE :
 TEMPERATURES          (T)  IN  DEG F
 MASS FLOWS            (F)  IN  LB/MIN
 CONCENTRATION         (C)  IN  PERCENTS
 ENTHALPIES            (H)  IN  BTU/LB
 PRESSURES             (P)  IN  PSIA
 HEAT QUANTITIES       (Q)  IN  BTU/MIN

TOLERANCES IN F, X          1.0D-05      1.0D-08

NO. OF UNITS      5
NO. OF STATE POINTS     19

    1    2    2     0.6909    -1     0.0000
    5   15   10   11    6   17    0
    2    3    2     0.8327     1     0.0000
    6    7    4    5    0    0    0
    3    4    2     0.7997     1     0.0000
   15   12   13   14   19    0    0
    4    5    2     0.5998    -1     0.0000
   12    8    1    2   18    0    0
    5    1    2     0.9312     1     0.0000
    7    8    3    9    4   16    0

STARTING POINTS
    1    3    0 140.0    0  402.10    0    0.0    0    0.0    0    0.0
    2    3    1 100.0    0  402.10    0    0.0    0    0.0    0    0.0
    3    3    0 140.0    0   59.30    0    0.0    0    0.0    0    0.0
    4    5    1 100.0    3   33.70    3   50.0    3   10.0    0    0.0
    5    5    1 100.0    3   33.70    3   50.0    2    2.0    0    0.0
    6    5    2 100.0    0   43.70    2   65.0    2    2.0    0    0.0
    7    5    1 100.0    0   43.70    2   65.0    3   10.0    0    0.0
    8    6    3 100.0    2   10.00    0    0.0    3   10.0    0    1.0
    9    3    1 170.0    0   59.30    0    0.0    0    0.0    0    0.0
   10    3    0 140.0    0  118.60    0    0.0    0    0.0    0    0.0
   11    3    1 100.0    0  118.60    0    0.0    0    0.0    0    0.0
   12    6    4 100.0    2   10.00    0    0.0    2    2.0    0    0.0
   13    3    0  59.0    0  256.20    0    0.0    0    0.0    0    0.0
   14    3    1 100.0    0  256.20    0    0.0    0    0.0    0    0.0
   15    6    2 100.0    2   10.00    0    0.0    2    2.0    0    1.0
   16    5    1 100.0    0    1.00    1   58.0    3   10.0    0    0.0
   17    5    1 100.0    0    1.00    1   57.0    2    2.0    0    0.0
   18    6    3 100.0    2   10.00    0    0.0    3   10.0    0    0.0
   19    6    4 100.0    2   10.00    0    0.0    2    2.0    0    1.0
```

Table B.3 (continued)

LAST ITERATION NO. IS 47
IER = 1
EUCLIDEAN NORM OF FUN IS LESS THAN FTOL

STATE POINT	TEMPER.	ENTHALPY	FLOW RATE	CONCENTR.	PRESSURE	VAPOR FR.
1	1.4000D+02	1.0776D+02	4.0210D+02	0.0000D+00	0.0000D+00	0.0000D+00
2	1.3345D+02	1.0120D+02	4.0210D+02	0.0000D+00	0.0000D+00	0.0000D+00
3	1.4000D+02	1.0776D+02	5.9300D+01	0.0000D+00	0.0000D+00	0.0000D+00
4	1.6566D+02	5.3632D+01	4.8781D+01	5.3902D+01	9.4162D+00	0.0000D+00
5	1.4006D+02	4.5688D+01	4.8781D+01	5.3902D+01	2.1156D+00	0.0000D+00
6	1.2840D+02	4.3020D+01	4.3700D+01	6.0169D+01	2.1156D+00	0.0000D+00
7	1.5942D+02	5.6888D+01	4.3700D+01	6.0169D+01	9.4162D+00	0.0000D+00
8	1.2908D+02	5.4223D+02	5.0813D+00	0.0000D+00	9.4162D+00	1.0000D+00
9	1.8407D+02	1.5202D+02	5.9300D+01	0.0000D+00	0.0000D+00	0.0000D+00
10	1.4000D+02	1.0776D+02	1.1860D+02	0.0000D+00	0.0000D+00	0.0000D+00
11	1.1758D+02	8.5337D+01	1.1860D+02	0.0000D+00	0.0000D+00	0.0000D+00
12	7.2149D+01	2.3530D+01	5.0813D+00	0.0000D+00	2.1156D+00	0.0000D+00
13	5.9000D+01	2.7097D+01	2.5620D+02	0.0000D+00	0.0000D+00	0.0000D+00
14	6.9515D+01	3.7518D+01	2.5620D+02	0.0000D+00	0.0000D+00	0.0000D+00
15	1.2840D+02	5.4893D+02	5.0813D+00	0.0000D+00	2.1156D+00	1.0000D+00
16	1.8733D+02	6.4153D+01	4.4364D+01	5.9269D+01	9.4162D+00	0.0000D+00
17	1.0754D+02	3.6594D+01	4.7916D+01	5.4876D+01	2.1156D+00	0.0000D+00
18	1.2908D+02	5.8625D+01	5.0813D+00	0.0000D+00	9.4162D+00	0.0000D+00
19	7.2149D+01	5.3053D+02	5.0813D+00	0.0000D+00	2.1156D+00	1.0000D+00

THE EQUIVALENT HEAT TRANSFER QUANTITIES
FOR EVERY UNIT

NO.	TYPE	UA	EFF	CAT	LMTD
1	D	2.4626D+02	6.9090D-01	1.0032D+01	1.0798D+01
2	H	4.4723D+01	8.3270D-01	6.2334D+00	8.6656D+00
3	C	4.0824D+02	7.9970D-01	2.6338D+00	6.5397D+00
4	E	3.6857D+02	5.9980D-01	4.3695D+00	7.1510D+00
5	A	2.4189D+02	9.3120D-01	3.2563D+00	1.0852D+01

NO.	TYPE	HEAT TRANSFER	EQ. DEV.	IPINCH
1	D	2.6591D+03	0.000D+00	-1
2	H	3.8755D+02	0.000D+00	1
3	C	2.6697D+03	0.000D+00	1
4	E	2.6357D+03	0.000D+00	-1
5	A	2.6250D+03	0.000D+00	1

Table B.4. Data for a single stage heat transformer NH_3-H_2O cycle (see Fig. B.1)

```
SINGLE STAGE H.T. NH3-H2O

 INPUT AND OUTPUT IN BRITISH UNITS

 THE BRITISH UNITS ARE :
 TEMPERATURES        (T)  IN  DEG F
 MASS FLOWS          (F)  IN  LB/MIN
 CONCENTRATION       (C)  IN  PERCENTS
 ENTHALPIES          (H)  IN  BTU/LB
 PRESSURES           (P)  IN  PSIA
 HEAT QUANTITIES     (Q)  IN  BTU/MIN

TOLERANCES IN F, X          1.0D-05      1.0D-08

NO. OF UNITS      5
NO. OF STATE POINTS     19

    1     1     2      0.9231      1      0.0000
    7     8     3      9     4    16     0
    2     2     2      0.3363     -1      0.0000
    5    15    10     11     6    17     0
    3     3     2      0.7185      1      0.0000
    6     7     4      5     0     0     0
    4     4     2      0.4381     -1      0.0000
   15    12    13     14    19     0     0
    5     5     2      0.7835      1      0.0000
   12     8     1      2     18     0     0

STARTING POINTS
    1     3     0 160.0     0   115.40     0     0.0     0     0.0     0     0.0
    2     3     1 120.0     0   115.40     0     0.0     0     0.0     0     0.0
    3     3     0 140.0     0   126.80     0     0.0     0     0.0     0     0.0
    4     2     1 120.0     3    30.00     6    65.0     3 240.0     0     0.0
    5     2     1 120.0     3    30.00     6    65.0     2 110.0     0     0.0
    6     2     2 120.0     0    27.50     2    55.0     2 110.0     0     0.0
    7     2     1 120.0     0    27.50     2    55.0     3 240.0     0     0.0
    8     2     1 120.0     2     2.50     3    99.0     3 240.0     0     1.0
    9     3     1 120.0     0   126.80     0     0.0     0     0.0     0     0.0
   10     3     0 160.0     0   184.40     0     0.0     0     0.0     0     0.0
   11     3     1 120.0     0   184.40     0     0.0     0     0.0     0     0.0
   12     2     1 120.0     2     2.50     3    99.0     2 110.0     0     0.0
   13     3     0  59.0     0   163.70     0     0.0     0     0.0     0     0.0
   14     3     1 120.0     0   163.70     0     0.0     0     0.0     0     0.0
   15     2     2 120.0     2     2.50     3    99.0     2 110.0     0     1.0
   16     2     1 120.0     0     1.00     1    56.0     3 240.0     0     0.0
   17     2     1 120.0     0     1.00     1    64.0     2 110.0     0     0.0
   18     2     1 120.0     2     2.50     3    99.0     3 240.0     0     0.0
   19     2     2 120.0     2     2.50     3    99.0     2 110.0     0     1.0
```

Table B.4 (continued)

```
 LAST ITERATION NO. IS   106
 IER =     1
  EUCLIDEAN NORM OF FUN IS LESS THAN FTOL
```

STATE POINT	TEMPER.	ENTHALPY	FLOW RATE	CONCENTR.	PRESSURE	VAPOR FR.
1	1.6000D+02	1.2781D+02	1.1540D+02	0.0000D+00	0.0000D+00	0.0000D+00
2	1.4236D+02	1.1012D+02	1.1540D+02	0.0000D+00	0.0000D+00	0.0000D+00
3	1.4000D+02	1.0776D+02	1.2680D+02	0.0000D+00	0.0000D+00	0.0000D+00
4	1.4977D+02	5.1453D+01	3.1541D+01	7.1233D+01	2.8764D+02	0.0000D+00
5	1.4279D+02	4.2636D+01	3.1541D+01	7.1233D+01	2.2136D+02	0.0000D+00
6	1.3701D+02	2.7852D+01	2.7500D+01	6.7067D+01	2.2136D+02	0.0000D+00
7	1.4618D+02	3.7964D+01	2.7500D+01	6.7067D+01	2.8764D+02	0.0000D+00
8	1.5143D+02	5.8453D+02	4.0411D+00	9.9582D+01	2.8764D+02	1.0000D+00
9	1.5403D+02	1.2182D+02	1.2680D+02	0.0000D+00	0.0000D+00	0.0000D+00
10	1.6000D+02	1.2781D+02	1.8440D+02	0.0000D+00	0.0000D+00	0.0000D+00
11	1.5035D+02	1.1813D+02	1.8440D+02	0.0000D+00	0.0000D+00	0.0000D+00
12	1.0283D+02	7.9332D+01	4.0411D+00	9.9582D+01	2.2136D+02	0.0000D+00
13	5.9000D+01	2.7097D+01	1.6370D+02	0.0000D+00	0.0000D+00	0.0000D+00
14	7.1595D+01	3.9580D+01	1.6370D+02	0.0000D+00	0.0000D+00	0.0000D+00
15	1.3701D+02	5.8502D+02	4.0411D+00	9.9582D+01	2.2136D+02	1.0000D+00
16	1.5520D+02	5.0550D+01	2.8148D+01	6.7816D+01	2.8764D+02	0.0000D+00
17	1.3131D+02	2.7998D+01	3.0712D+01	7.0468D+01	2.2136D+02	0.0000D+00
18	1.2042D+02	1.0032D+02	4.0411D+00	9.9582D+01	2.8764D+02	0.0000D+00
19	1.3701D+02	5.8502D+02	4.0411D+00	9.9582D+01	2.2136D+02	1.0000D+00

THE EQUIVALENT HEAT TRANSFER QUANTITIES
FOR EVERY UNIT

NO.	TYPE	UA	EFF	CAT	LMTD
1	A	4.4033D+02	9.2310D-01	1.1689D+00	4.0499D+00
2	D	8.5198D+01	3.3630D-01	1.9041D+01	2.0954D+01
3	H	6.0439D+01	7.1850D-01	3.5913D+00	4.6011D+00
4	C	3.7910D+01	4.3810D-01	4.3833D+01	5.3905D+01
5	E	1.4354D+02	7.8350D-01	8.5697D+00	1.4223D+01

NO.	TYPE	HEAT TRANSFER	EQ. DEV.	IPINCH
1	A	1.7833D+03	0.000D+00	1
2	D	1.7853D+03	0.000D+00	-1
3	H	2.7808D+02	0.000D+00	1
4	C	2.0436D+03	0.000D+00	-1
5	E	2.0416D+03	0.000D+00	1

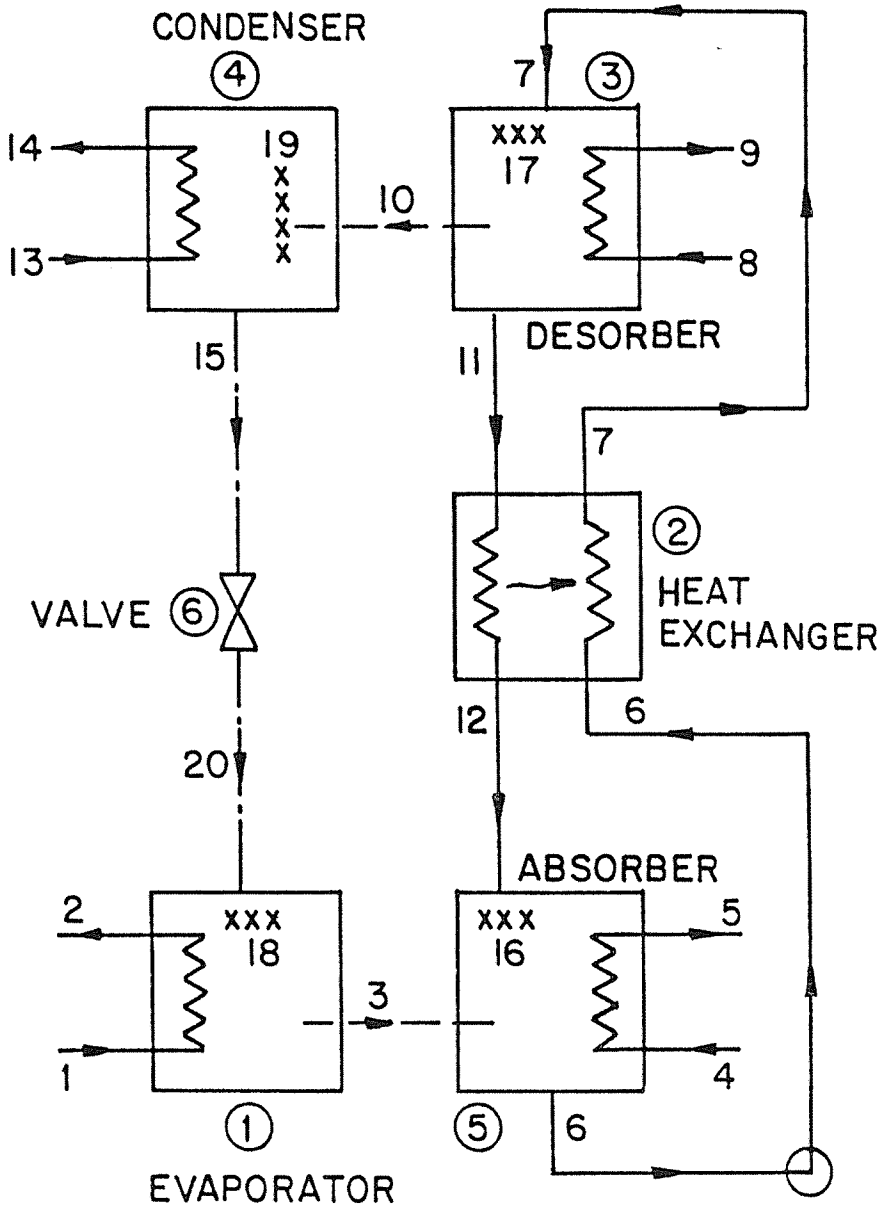

Figure B.2. Single stage chiller/heat pump.

Table B.5. Data for a single stage chiller NH_3-LiBr/H_2O cycle (see Fig. B.2)

```
SINGLE STAGE CHILLER NH3-LIBR/H2O

 INPUT AND OUTPUT IN BRITISH UNITS

 THE BRITISH UNITS ARE :
 TEMPERATURES          (T)  IN  DEG F
 MASS FLOWS            (F)  IN  LB/MIN
 CONCENTRATION         (C)  IN  PERCENTS
 ENTHALPIES            (H)  IN  BTU/LB
 PRESSURES             (P)  IN  PSIA
 HEAT QUANTITIES       (Q)  IN  BTU/MIN

TOLERANCES IN F, X          1.0D-05       1.0D-08

NO. OF UNITS       6
NO. OF STATE POINTS      20

     1     1     1   568.0000     0      0.0000
     7     8     3     9     4    16     0
     2     2     1   295.0000     0      0.0000
     5    15    10    11     6    17     0
     3     3     1   247.0000     0      0.0000
     4     5     6     7     0     0     0
     4     4     1   191.0000     0      0.0000
    15    12    13    14    19     0     0
     5     5     1   584.0000     0      0.0000
    20     8     1     2    18     0     0
     6     6     0     0.0000     0      0.0000
    12    20     0     0     0     0     0

STARTING POINTS
     1     3   0   70.0    0   215.40   0    0.0   0    0.0   0    0.0
     2     3   1   60.0    0   215.40   0    0.0   0    0.0   0    0.0
     3     3   0   70.0    0   126.80   0    0.0   0    0.0   0    0.0
     4     4   1   81.0    3    31.80   4   58.0   3   92.0   0    0.0
     5     4   1  124.0    3    31.80   4   58.0   2  195.0   0    0.0
     6     4   2  135.0    0    27.50   2   51.4   2  195.0   0    0.0
     7     4   1   82.0    0    27.50   2   51.4   3   92.0   0    0.0
     8     2   1   69.0    2     4.34   3   99.9   3   92.0   0    1.0
     9     3   1   91.0    0   126.80   0    0.0   0    0.0   0    0.0
    10     3   0  145.0    0   184.40   0    0.0   0    0.0   0    0.0
    11     3   1  130.0    0   184.40   0    0.0   0    0.0   0    0.0
    12     2   1   95.0    2     4.34   3   99.9   2  195.0   0    0.0
    13     3   0   80.0    0   163.70   0    0.0   0    0.0   0    0.0
    14     3   1   94.0    0   163.70   0    0.0   0    0.0   0    0.0
    15     4   2  135.0    2     4.34   3   99.9   2  195.0   0    1.0
    16     4   1   92.0    0     1.00   1   52.0   3   92.0   0    0.0
    17     4   1  122.0    0     1.00   1   57.8   2  195.0   0    0.0
    18     2   3   51.0    2     4.34   3   99.9   3   92.0   2    0.1
    19     2   1  103.0    2     4.34   3   99.9   2  195.0   0    1.0
    20     2   3   51.0    2     4.34   3   99.9   3   92.0   2    0.1
```

Table B.5 (continued)

```
   LAST ITERATION NO. IS     56
   IER =      1
    EUCLIDEAN NORM OF FUN IS LESS THAN FTOL

STATE  TEMPER.    ENTHALPY   FLOW RATE   CONCENTR.    PRESSURE   VAPOR FR.
POINT
  1 7.0000D+01 3.7998D+01 2.1540D+02 0.0000D+00 0.0000D+00 0.0000D+00
  2 6.0055D+01 2.8142D+01 2.1540D+02 0.0000D+00 0.0000D+00 0.0000D+00
  3 7.0000D+01 3.7998D+01 1.2680D+02 0.0000D+00 0.0000D+00 0.0000D+00
  4 8.0740D+01-7.4892D+01 3.1845D+01 5.7987D+01 9.1593D+01 0.0000D+00
  5 1.2422D+02-3.9414D+01 3.1845D+01 5.7937D+01 1.9494D+02 0.0000D+00
  6 1.3523D+02-3.9973D+01 2.7500D+01 5.1360D+01 1.9494D+02 0.0000D+00
  7 8.2064D+01-8.1057D+01 2.7500D+01 5.1360D+01 9.1593D+01 0.0000D+00
  8 6.8911D+01 5.5939D+02 4.3449D+00 9.9929D+01 9.1593D+01 1.0000D+00
  9 9.0537D+01 5.8395D+01 1.2680D+02 0.0000D+00 0.0000D+00 0.0000D+00
 10 1.4500D+02 1.1277D+02 1.8440D+02 0.0000D+00 0.0000D+00 0.0000D+00
 11 1.3041D+02 9.8157D+01 1.8440D+02 0.0000D+00 0.0000D+00 0.0000D+00
 12 9.4635D+01 7.0770D+01 4.3449D+00 9.9929D+01 1.9494D+02 0.0000D+00
 13 8.0000D+01 4.7923D+01 1.6370D+02 0.0000D+00 0.0000D+00 0.0000D+00
 14 9.3707D+01 6.1549D+01 1.6370D+02 0.0000D+00 0.0000D+00 0.0000D+00
 15 1.3523D+02 5.8415D+02 4.3449D+00 9.9929D+01 1.9494D+02 1.0000D+00
 16 9.1910D+01-7.2971D+01 2.7852D+01 5.1973D+01 9.1593D+01 0.0000D+00
 17 1.2188D+02-4.1589D+01 3.1734D+01 5.7840D+01 1.9494D+02 0.0000D+00
 18 5.1452D+01 7.0770D+01 4.3449D+00 9.9929D+01 9.1593D+01 9.3978D-02
 19 1.0286D+02 5.6123D+02 4.3449D+00 9.9929D+01 1.9494D+02 1.0000D+00
 20 5.1452D+01 7.0770D+01 4.3449D+00 9.9929D+01 9.1593D+01 9.3978D-02

     THE EQUIVALENT HEAT TRANSFER QUANTITIES
     FOR EVERY UNIT

    NO.     TYPE          UA           EFF          CAT          LMTD
     1        A       5.6800D+02  9.3734D-01  1.3728D+00  4.5535D+00
     2        D       2.9500D+02  6.3126D-01  8.5249D+00  9.1320D+00
     3        H       2.4700D+02  9.7569D-01  1.3245D+00  4.5741D+00
     4        C       1.9100D+02  5.9969D-01  9.1499D+00  1.1678D+01
     5        E       5.8400D+02  9.4130D-01  1.0887D+00  3.6353D+00
     6        V       0.0000D+00  0.0000D+00  0.0000D+00  0.0000D+00

    NO.     TYPE     HEAT TRANSFER     EQ. DEV.   IPINCH
     1        A       2.5864D+03      0.000D+00      1
     2        D       2.6939D+03      0.000D+00     -1
     3        H       1.1298D+03      0.000D+00     -1
     4        C       2.2306D+03      0.000D+00      1
     5        E       2.1230D+03      0.000D+00      1
     6        V       0.0000D+00      0.000D+00      0
```

Table B.6. Data for a single stage chiller $LiBr/ZnBr_2$-CH_3OH cycle (see Fig. B.2)

```
SINGLE STAGE CHILLER LIBR/ZNBR2-CH3OH

 INPUT AND OUTPUT IN BRITISH UNITS

 THE BRITISH UNITS ARE :
 TEMPERATURES        (T)  IN  DEG F
 MASS FLOWS          (F)  IN  LB/MIN
 CONCENTRATION       (C)  IN  PERCENTS
 ENTHALPIES          (H)  IN  BTU/LB
 PRESSURES           (P)  IN  PSIA
 HEAT QUANTITIES     (Q)  IN  BTU/MIN

TOLERANCES IN F, X          1.0D-05       1.0D-08

NO. OF UNITS      6
NO. OF STATE POINTS     20

    1     5     2      0.5999    -1      0.0000
   20     3     1     2   18     0     0
    2     3     2      0.8479    -1      0.0000
    6     7    11    12    0     0     0
    3     2     2      0.6418     1      0.0000
    7    10     8     9   11    17     0
    4     4     2      0.7998     1      0.0000
   10    15    13    14   19     0     0
    5     1     2      0.9183     1      0.0000
   12     3     4     5    6    16     0
    6     6     0      0.0000     0      0.0000
   15    20     0     0    0     0     0

STARTING POINTS
    1     3     0   55.0     0   402.10     0    0.0     0    0.0     0    0.0
    2     3     1   60.0     0   402.10     0    0.0     0    0.0     0    0.0
    3     6     3   60.0     3     5.70     0    0.0     3    1.0     0    1.0
    4     3     0   85.0     0    59.30     0    0.0     0    0.0     0    0.0
    5     3     1   60.0     0    59.30     0    0.0     0    0.0     0    0.0
    6     5     1   60.0     0    43.70     3   45.0     3    1.0     0    0.0
    7     5     1   60.0     0    43.70     3   45.0     2    3.0     0    0.0
    8     3     0  180.0     0   118.60     0    0.0     0    0.0     0    0.0
    9     3     1   60.0     0   118.60     0    0.0     0    0.0     0    0.0
   10     6     2   60.0     3     5.70     0    0.0     2    3.0     0    1.0
   11     5     2   60.0     2    38.00     2   55.0     2    3.0     0    0.0
   12     5     1   60.0     2    38.00     2   55.0     3    0.0     0    0.0
   13     3     0   85.0     0   256.20     0    0.0     0    0.0     0    0.0
   14     3     1   60.0     0   256.20     0    0.0     0    0.0     0    0.0
   15     6     4   60.0     3     5.70     0    0.0     2    3.0     0    0.0
   16     5     1   60.0     0     0.00     1   54.0     3    1.0     0    0.0
   17     5     1   60.0     0     0.00     1   46.0     2    3.0     0    0.0
   18     6     3   60.0     3     5.70     0    0.0     3    1.0     2    0.1
   19     6     4   60.0     3     5.70     0    0.0     2    3.0     0    1.0
   20     6     3   60.0     3     5.70     0    0.0     3    1.0     2    0.1
```

Table B.6 (continued)

```
   LAST ITERATION NO. IS     52
   IER =      1
    EUCLIDEAN NORM OF FUN IS LESS THAN FTOL
```

STATE POINT	TEMPER.	ENTHALPY	FLOW RATE	CONCENTR.	PRESSURE	VAPOR FR.
1	5.5000D+01	2.3137D+01	4.0210D+02	0.0000D+00	0.0000D+00	0.0000D+00
2	5.1422D+01	1.9597D+01	4.0210D+02	0.0000D+00	0.0000D+00	0.0000D+00
3	4.9036D+01	5.2493D+02	2.9105D+00	0.0000D+00	1.0377D+00	1.0000D+00
4	8.5000D+01	5.2890D+01	5.9300D+01	0.0000D+00	0.0000D+00	0.0000D+00
5	1.1556D+02	8.3329D+01	5.9300D+01	0.0000D+00	0.0000D+00	0.0000D+00
6	9.9791D+01	3.9212D+01	4.3700D+01	5.9477D+01	1.0377D+00	0.0000D+00
7	1.5223D+02	5.3978D+01	4.3700D+01	5.9477D+01	3.7499D+00	0.0000D+00
8	1.8000D+02	1.4792D+02	1.1860D+02	0.0000D+00	0.0000D+00	0.0000D+00
9	1.6401D+02	1.3184D+02	1.1860D+02	0.0000D+00	0.0000D+00	0.0000D+00
10	1.6866D+02	5.6002D+02	2.9105D+00	0.0000D+00	3.7499D+00	1.0000D+00
11	1.6866D+02	6.4626D+01	4.0789D+01	6.3721D+01	3.7499D+00	0.0000D+00
12	1.1027D+02	4.8807D+01	4.0789D+01	6.3721D+01	1.0377D+00	0.0000D+00
13	8.5000D+01	5.2890D+01	2.5620D+02	0.0000D+00	0.0000D+00	0.0000D+00
14	9.0989D+01	5.8845D+01	2.5620D+02	0.0000D+00	0.0000D+00	0.0000D+00
15	9.2489D+01	3.5844D+01	2.9105D+00	0.0000D+00	3.7499D+00	0.0000D+00
16	1.1828D+02	5.0484D+01	4.0934D+01	6.3496D+01	1.0377D+00	0.0000D+00
17	1.4836D+02	5.2989D+01	4.3615D+01	5.9593D+01	3.7499D+00	0.0000D+00
18	4.9036D+01	3.5844D+01	2.9105D+00	0.0000D+00	1.0377D+00	5.0455D-02
19	9.2489D+01	5.3509D+02	2.9105D+00	0.0000D+00	3.7499D+00	1.0000D+00
20	4.9036D+01	3.5844D+01	2.9105D+00	0.0000D+00	1.0377D+00	5.0455D-02

THE EQUIVALENT HEAT TRANSFER QUANTITIES
FOR EVERY UNIT

NO.	TYPE	UA	EFF	CAT	LMTD
1	E	3.6446D+02	5.9990D-01	2.3862D+00	3.9057D+00
2	H	4.8758D+01	8.4790D-01	1.0476D+01	1.3233D+01
3	D	1.4255D+02	6.4180D-01	1.1335D+01	1.3379D+01
4	C	4.0971D+02	7.9980D-01	1.4992D+00	3.7237D+00
5	A	2.5324D+02	9.1830D-01	2.7193D+00	7.1278D+00
6	V	1.9362D+02	8.0000D-01	1.1777D+00	2.9271D+00

NO.	TYPE	HEAT TRANSFER	EQ. DEV.	IPINCH
1	E	1.4235D+03	0.000D+00	-1
2	H	6.4524D+02	0.000D+00	-1
3	D	1.9072D+03	0.000D+00	1
4	C	1.5256D+03	0.000D+00	1
5	A	1.8050D+03	0.000D+00	1
6	V	0.0000D+00	0.000D+00	0

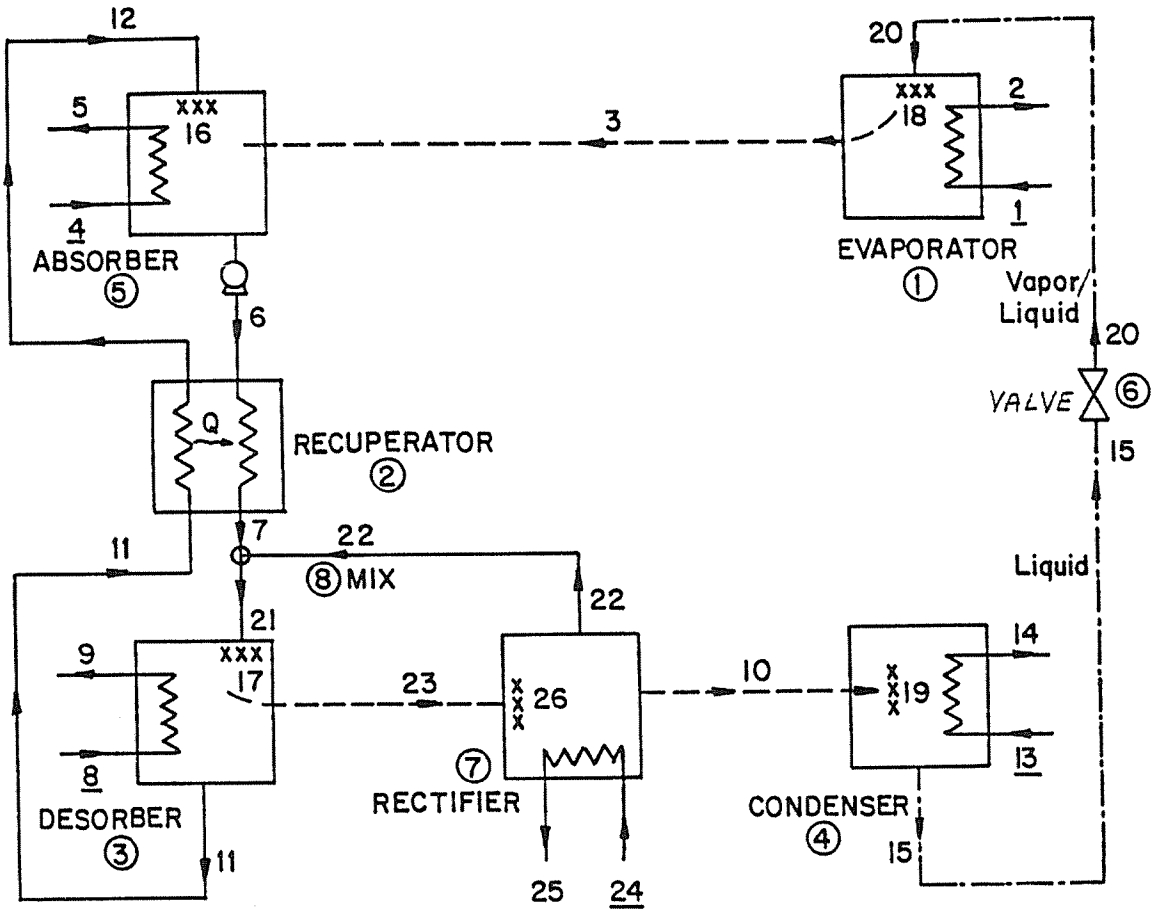

Fig. B.3. Single stage chiller with rectifier.

Table B.7. Data for a single stage chiller NH_3-H_2O cycle with a rectifier (see Fig. B.3)

```
SINGLE STAGE CHILLER NH3-H2O WITH RECTIFIER

 INPUT AND OUTPUT IN BRITISH UNITS

TOLERANCES IN F, X        1.0D-05      1.0D-08

NO. OF UNITS      8
NO. OF STATE POINTS     26

    1     5     2      0.6000     1      0.0000
   20     3     1     2   18     0     0
    2     3     2      0.8480    -1      0.0000
    6     7    11    12    0     0     0
    3     2     2      0.6420    -1      0.0000
   21    23     8     9   11    17     0
    4     4     2      0.8000    -1      0.0000
   10    15    13    14   19     0     0
    5     1     2      0.9180     1      0.0000
   12     3     4     5    6    16     0
    6     6     0      0.0000     0      0.0000
   15    20     0     0    0     0     0
    7     9     2      0.7410     1      0.0000
   23    10    24    25   22    26     0
    8     7     0      0.0000     0      0.0000
    7    22    21     0    0     0     0

STARTING POINTS
    1     3    0   60.0    0    47.94    0    0.0    0    0.0    0    0.0
    2     3    1   55.0    0    47.94    0    0.0    0    0.0    0    0.0
    3     2    1   50.0    6     0.50    5  100.0    3   83.0    0    1.0
    4     3    0   85.0    0     9.06    0    0.0    0    0.0    0    0.0
    5     3    1  120.0    0     9.06    0    0.0    0    0.0    0    0.0
    6     2    1  110.0    0     3.00    9   50.0    3   83.0    0    0.0
    7     2    1  176.0    0     3.00    9   50.0    2  200.0    0    0.0
    8     3    0  220.0    0     9.64    0    0.0    0    0.0    0    0.0
    9     3    1  180.0    0     9.64    0    0.0    0    0.0    0    0.0
   10     2    2   97.0    6     0.50    5  100.0    2  200.0    0    1.0
   11     2    4  200.0    2     2.50    2   40.0    2  200.0    0    0.0
   12     2    1  120.0    2     2.50    2   40.0    3   83.0    0    0.0
   13     3    0   85.0    0    48.46    0    0.0    0    0.0    0    0.0
   14     3    1   90.0    0    48.46    0    0.0    0    0.0    0    0.0
   15     2    1   96.0    6     0.50    5  100.0    2  200.0    0    0.0
   16     2    1  141.0    0     2.50    1   57.0    3   83.0    0    0.0
   17     2    1  168.0    0     0.00    1   57.0    2  200.0    0    0.0
   18     2    3   47.0    6     0.50    5  100.0    3   83.0    2    0.1
   19     2    2   97.0    6     0.50    5  100.0    2  200.0    0    1.0
   20     2    3   47.0    6     0.50    5  100.0    3   83.0    2    0.1
   21     2    1  176.0    1     3.04    1   50.0    2  200.0    0    0.0
   22     2    4  200.0    1     0.04    1   40.0    2  200.0    0    0.0
   23     2    4  200.0    5     0.54    4   96.0    2  200.0    0    1.0
   24     3    0   85.0    0     0.60    0    0.0    0    0.0    0    0.0
   25     3    1  195.0    0     0.60    0    0.0    0    0.0    0    0.0
   26     2    4  200.0    5     0.54    4   96.0    2  200.0    0    1.0
```

Table B.7 (continued)

```
 LAST ITERATION NO. IS     78
 IER =      1
  EUCLIDEAN NORM OF FUN IS LESS THAN FTOL
```

STATE POINT	TEMPER.	ENTHALPY	FLOW RATE	CONCENTR.	PRESSURE	VAPOR FR.
1	6.0000D+01	2.8087D+01	4.7940D+01	0.0000D+00	0.0000D+00	0.0000D+00
2	5.6362D+01	2.4485D+01	4.7940D+01	0.0000D+00	0.0000D+00	0.0000D+00
3	4.5270D+01	5.5421D+02	3.4998D-01	9.9959D+01	5.1796D+01	1.0000D+00
4	8.5000D+01	5.2890D+01	9.0600D+00	0.0000D+00	0.0000D+00	0.0000D+00
5	1.1365D+02	8.1420D+01	9.0600D+00	0.0000D+00	0.0000D+00	0.0000D+00
6	9.4870D+01	-4.2262D+01	3.0000D+00	4.5584D+01	5.1796D+01	0.0000D+00
7	1.7105D+02	4.1398D+01	3.0000D+00	4.5584D+01	1.6924D+02	0.0000D+00
8	2.2000D+02	1.8830D+02	9.6400D+00	0.0000D+00	0.0000D+00	0.0000D+00
9	1.8832D+02	1.5630D+02	9.6400D+00	0.0000D+00	0.0000D+00	0.0000D+00
10	9.0662D+01	5.5799D+02	3.4998D-01	9.9959D+01	1.6924D+02	1.0000D+00
11	1.9457D+02	7.1213D+01	2.6500D+00	3.8403D+01	1.6924D+02	0.0000D+00
12	1.1002D+02	-2.3496D+01	2.6500D+00	3.8403D+01	5.1796D+01	0.0000D+00
13	8.5000D+01	5.2890D+01	4.8460D+01	0.0000D+00	0.0000D+00	0.0000D+00
14	8.8612D+01	5.6481D+01	4.8460D+01	0.0000D+00	0.0000D+00	0.0000D+00
15	8.6132D+01	6.0830D+01	3.4998D-01	9.9959D+01	1.6924D+02	0.0000D+00
16	1.1621D+02	-1.7383D+01	2.6784D+00	3.9054D+01	5.1796D+01	0.0000D+00
17	1.7065D+02	4.0975D+01	3.0248D+00	4.5460D+01	1.6924D+02	0.0000D+00
18	2.3175D+01	6.0830D+01	3.4998D-01	9.9959D+01	5.1796D+01	1.2829D-01
19	9.0662D+01	5.5799D+02	3.4998D-01	9.9959D+01	1.6924D+02	1.0000D+00
20	2.3175D+01	6.0830D+01	3.4998D-01	9.9959D+01	5.1796D+01	1.2829D-01
21	1.7128D+02	4.1677D+01	3.0283D+00	4.5517D+01	1.6924D+02	0.0000D+00
22	1.9457D+02	7.1213D+01	2.8279D-02	3.8403D+01	1.6924D+02	0.0000D+00
23	1.9457D+02	6.5031D+02	3.7826D-01	9.5357D+01	1.6924D+02	1.0000D+00
24	8.5000D+01	5.2890D+01	6.0000D-01	0.0000D+00	0.0000D+00	0.0000D+00
25	1.6619D+02	1.3403D+02	6.0000D-01	0.0000D+00	0.0000D+00	0.0000D+00
26	1.9457D+02	6.5031D+02	3.7826D-01	9.5357D+01	1.6924D+02	1.0000D+00

THE EQUIVALENT HEAT TRANSFER QUANTITIES
FOR EVERY UNIT

NO.	TYPE	UA	EFF	CAT	LMTD
1	E	7.5991D+00	5.0000D-01	1.4730D+01	2.2723D+01
2	H	1.3186D+01	8.4800D-01	1.5154D+01	1.9033D+01
3	D	1.4475D+01	6.4200D-01	1.7666D+01	2.1313D+01
4	C	1.1253D+02	8.0000D-01	1.1324D+00	1.5462D+00
5	A	4.7724D+01	9.1800D-01	2.5592D+00	5.4162D+00
6	V	0.0000D+00	0.0000D+00	0.0000D+00	0.0000D+00
7	R	8.1006D-01	7.4100D-01	2.8379D+01	6.0100D+01
8	M	0.0000D+00	0.0000D+00	0.0000D+00	0.0000D+00

NO.	TYPE	HEAT TRANSFER	EQ. DEV.	IPINCH
1	E	1.7267D+02	0.000D+00	1
2	H	2.5098D+02	0.000D+00	-1
3	D	3.0849D+02	0.000D+00	-1
4	C	1.7400D+02	0.000D+00	-1
5	A	2.5848D+02	0.000D+00	1
6	V	0.0000D+00	0.000D+00	0
7	R	4.8685D+01	0.000D+00	1
8	M	0.0000D+00	0.000D+00	0

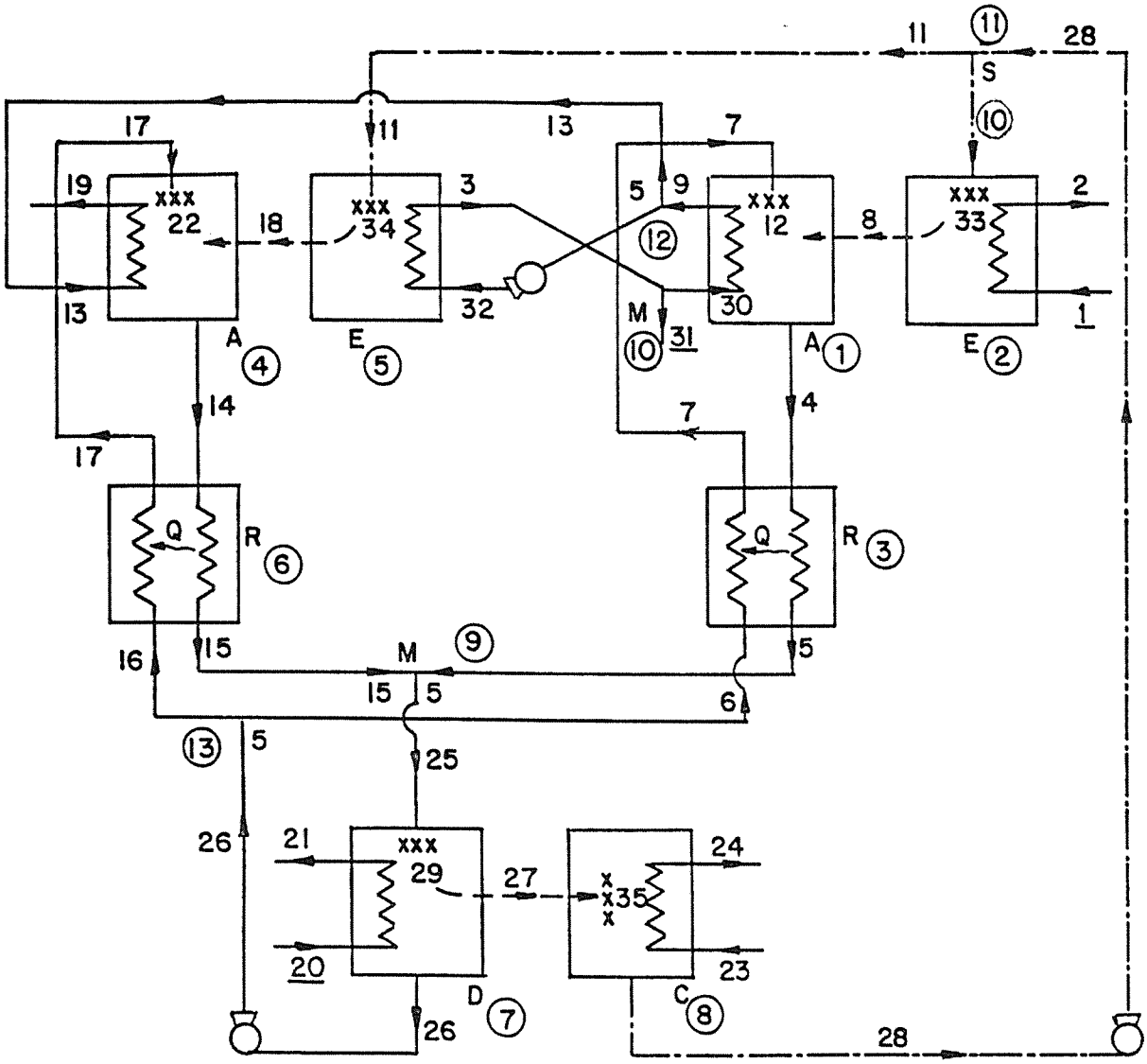

Fig. B.4. Double stage heat transformer.

Table B.8. Data for a double stage heat transformer LiBr-H_2O cycle (see Fig. B.4)

```
DOUBLE STAGE H.T. LIBR-H2O

 INPUT AND OUTPUT IN BRITISH UNITS

 THE BRITISH UNITS ARE :
 TEMPERATURES          (T)   IN   DEG F
 MASS FLOWS            (F)   IN   LB/MIN
 CONCENTRATION         (C)   IN   PERCENTS
 ENTHALPIES            (H)   IN   BTU/LB
 PRESSURES             (P)   IN   PSIA
 HEAT QUANTITIES       (Q)   IN   BTU/MIN

TOLERANCES IN F, X          1.0D-05      1.0D-08

NO. OF UNITS     13
NO. OF STATE POINTS      35

    1     1     2     0.5990     1     0.0000
    7    8   30    9    4   12    0
    2     5     2     0.5996    -1     0.0000
   10    8    1    2   33    0    0
    3     3     2     0.7994     1     0.0000
    6    7    4    5    0    0    0
    4     1     2     0.9007     1     0.0000
   17   18   13   19   14   22    0
    5     5     2     0.7999    -1     0.0000
   11   18   32    3   34    0    0
    6     3     2     0.9028     1     0.0000
   16   17   14   15    0    0    0
    7     2     2     0.5504     1     0.0000
   25   27   20   21   26   29    0
    8     4     2     0.5997     1     0.0000
   27   28   23   24   35    0    0
    9     7     0     0.0000     0     0.0000
   15    5   25    0    0    0    0
   10     7     0     0.0000     0     0.0000
   31    3   30    0    0    0    0
   11     8     0     0.0000     0     0.0000
   10   11   28    0    0    0    0
   12     8     0     0.0000     0     0.0000
   13   32    9    0    0    0    0
   13     8     0     0.0000     0     0.0000
   16    6   26    0    0    0    0
```

Table B.8 (continued)

```
   LAST ITERATION NO. IS     85
   IER =      1
    EUCLIDEAN NORM OF FUN IS LESS THAN FTOL

STATE  TEMPER.     ENTHALPY   FLOW RATE   CONCENTR.    PRESSURE   VAPOR FR.
POINT
   1 1.4000D+02 1.0776D+02 1.2600D+01 0.0000D+00 0.0000D+00 0.0000D+00
   2 1.3300D+02 1.0075D+02 1.2600D+01 0.0000D+00 0.0000D+00 0.0000D+00
   3 1.6378D+02 1.3161D+02 3.6800D+00 0.0000D+00 0.0000D+00 0.0000D+00
   4 1.7258D+02 7.1225D+01 8.2310D-01 4.8779D+01 2.1236D+00 0.0000D+00
   5 1.4247D+02 5.5149D+01 8.2310D-01 4.8779D+01 4.0115D-01 0.0000D+00
   6 1.2792D+02 5.1102D+01 7.4100D-01 5.4184D+01 4.0115D-01 0.0000D+00
   7 1.6362D+02 6.8959D+01 7.4100D-01 5.4184D+01 2.1236D+00 0.0000D+00
   8 1.2832D+02 1.1166D+03 8.2096D-02 0.0000D+00 2.1236D+00 1.0000D+00
   9 1.7659D+02 1.4449D+02 4.6800D+00 0.0000D+00 0.0000D+00 0.0000D+00
  10 7.2963D+01 4.0937D+01 8.2096D-02 0.0000D+00 4.0115D-01 0.0000D+00
  11 7.2963D+01 4.0937D+01 4.3527D-02 0.0000D+00 4.0115D-01 0.0000D+00
  12 1.8857D+02 8.1012D+01 7.4962D-01 5.3560D+01 2.1236D+00 0.0000D+00
  13 1.7659D+02 1.4449D+02 1.0000D+00 0.0000D+00 0.0000D+00 0.0000D+00
  14 2.0833D+02 9.0396D+01 4.3353D-01 4.8744D+01 4.8052D+00 0.0000D+00
  15 1.4726D+02 5.7700D+01 4.3353D-01 4.8744D+01 4.0115D-01 0.0000D+00
  16 1.2792D+02 5.1102D+01 3.9000D-01 5.4184D+01 4.0115D-01 0.0000D+00
  17 2.0051D+02 8.7447D+01 3.9000D-01 5.4184D+01 4.8052D+00 0.0000D+00
  18 1.6057D+02 1.1302D+03 4.3527D-02 0.0000D+00 4.8052D+00 1.0000D+00
  19 2.2029D+02 1.8860D+02 1.0000D+00 0.0000D+00 0.0000D+00 0.0000D+00
  20 1.4000D+02 1.0776D+02 1.5700D+01 0.0000D+00 0.0000D+00 0.0000D+00
  21 1.3187D+02 9.9619D+01 1.5700D+01 0.0000D+00 0.0000D+00 0.0000D+00
  22 2.2511D+02 9.9504D+01 3.9456D-01 5.3557D+01 4.8052D+00 0.0000D+00
  23 5.9000D+01 2.7097D+01 1.6300D+01 0.0000D+00 0.0000D+00 0.0000D+00
  24 6.7374D+01 3.5394D+01 1.6300D+01 0.0000D+00 0.0000D+00 0.0000D+00
  25 1.4412D+02 5.6029D+01 1.2566D+00 4.8767D+01 4.0115D-01 0.0000D+00
  26 1.2792D+02 5.1102D+01 1.1310D+00 5.4184D+01 4.0115D-01 0.0000D+00
  27 1.2792D+02 1.1175D+03 1.2562D-01 0.0000D+00 4.0115D-01 1.0000D+00
  28 7.2963D+01 4.0937D+01 1.2562D-01 0.0000D+00 4.0115D-01 0.0000D+00
  29 1.1314D+02 3.9827D+01 1.2377D+00 4.9511D+01 4.0115D-01 0.0000D+00
  30 1.5871D+02 1.2651D+02 4.6800D+00 0.0000D+00 0.0000D+00 0.0000D+00
  31 1.4000D+02 1.0776D+02 1.0000D+00 0.0000D+00 0.0000D+00 0.0000D+00
  32 1.7659D+02 1.4449D+02 3.6800D+00 0.0000D+00 0.0000D+00 0.0000D+00
  33 1.2832D+02 9.6072D+01 8.2096D-02 0.0000D+00 2.1236D+00 0.0000D+00
  34 1.6057D+02 1.2839D+02 4.3527D-02 0.0000D+00 4.8052D+00 0.0000D+00
  35 7.2963D+01 1.0927D+03 1.2562D-01 0.0000D+00 4.0115D-01 1.0000D+00

    THE EQUIVALENT HEAT TRANSFER QUANTITIES
    FOR EVERY UNIT

 NO.    TYPE        UA          EFF          CAT          LMTD
   1      A    3.4188D+00  5.9900D-01  1.1975D+01  1.2902D+01
   2      E    6.1969D+00  5.9960D-01  4.6762D+00  7.6508D+00
   3      H    1.2299D+00  7.9940D-01  8.9580D+00  1.1525D+01
   4      A    3.0893D+00  9.0070D-01  4.8177D+00  1.4278D+01
   5      E    5.9534D+00  7.9990D-01  3.2053D+00  7.9637D+00
   6      H    1.1146D+00  9.0280D-01  7.8149D+00  1.2717D+01
   7      D    3.4288D+00  5.5040D-01  1.2075D+01  1.5159D+01
   8      C    1.4787D+01  5.9970D-01  5.5893D+00  9.1460D+00
   9      M    0.0000D+00  0.0000D+00  0.0000D+00  0.0000D+00
  10      M    0.0000D+00  0.0000D+00  0.0000D+00  0.0000D+00
  11      S    0.0000D+00  0.0000D+00  0.0000D+00  0.0000D+00
  12      S    0.0000D+00  0.0000D+00  0.0000D+00  0.0000D+00
  13      S    0.0000D+00  0.0000D+00  0.0000D+00  0.0000D+00

 NO.    TYPE    HEAT TRANSFER     EQ. DEV.   IP INCH
   1      A      4.4108D+01      0.000D+00        1
   2      E      4.7411D+01      0.000D+00       -1
   3      H      1.4174D+01      0.000D+00        1
   4      A      4.4108D+01      0.000D+00        1
   5      E      4.7411D+01      0.000D+00       -1
   6      H      1.4174D+01      0.000D+00        1
   7      D      1.2777D+02      0.000D+00        1
   8      C      1.3524D+02      0.000D+00        1
   9      M      0.0000D+00      0.000D+00        0
  10      M      0.0000D+00      0.000D+00        0
  11      S      0.0000D+00      0.000D+00        0
  12      S      0.0000D+00      0.000D+00        0
  13      S      0.0000D+00      0.000D+00        0
```

Table B.8 (continued)

STARTING POINTS											
1	3	0	140.0	0	12.60	0	0.0	0	0.0	0	0.0
2	3	1	100.0	0	12.60	0	0.0	0	0.0	0	0.0
3	3	1	100.0	0	3.68	0	0.0	0	0.0	0	0.0
4	1	1	100.0	7	0.82	4	45.0	2	3.0	0	0.0
5	1	1	100.0	7	0.82	4	45.0	3	1.0	0	0.0
6	1	2	100.0	0	0.74	3	55.0	3	1.0	0	0.0
7	1	1	100.0	0	0.74	3	55.0	2	3.0	0	0.0
8	3	5	100.0	2	0.08	0	0.0	2	3.0	0	1.0
9	3	3	100.0	0	4.68	0	0.0	0	0.0	0	0.0
10	3	4	100.0	2	0.08	0	0.0	3	1.0	0	0.0
11	3	4	100.0	3	0.04	0	0.0	3	1.0	0	0.0
12	1	1	100.0	0	0.74	1	54.0	2	3.0	0	0.0
13	3	3	100.0	0	1.00	0	0.0	0	0.0	0	0.0
14	1	1	100.0	4	0.43	2	45.0	4	5.0	0	0.0
15	1	1	100.0	4	0.43	2	45.0	3	1.0	0	0.0
16	1	2	100.0	0	0.39	3	55.0	3	1.0	0	0.0
17	1	1	100.0	0	0.39	3	55.0	4	5.0	0	0.0
18	3	6	100.0	3	0.04	0	0.0	4	5.0	0	1.0
19	3	1	100.0	0	1.00	0	0.0	0	0.0	0	0.0
20	3	0	140.0	0	15.70	0	0.0	0	0.0	0	0.0
21	3	1	100.0	0	15.70	0	0.0	0	0.0	0	0.0
22	1	1	100.0	0	0.39	1	54.0	4	5.0	0	0.0
23	3	0	59.0	0	16.30	0	0.0	0	0.0	0	0.0
24	3	1	100.0	0	16.30	0	0.0	0	0.0	0	0.0
25	1	1	100.0	5	1.25	1	45.0	3	1.0	0	0.0
26	1	2	100.0	0	1.13	3	55.0	3	1.0	0	0.0
27	3	2	100.0	6	0.12	0	0.0	3	1.0	0	1.0
28	3	4	100.0	6	0.12	0	0.0	3	1.0	0	0.0
29	1	1	100.0	5	1.25	1	46.0	3	1.0	0	0.0
30	3	1	100.0	0	4.68	0	0.0	0	0.0	0	0.0
31	3	0	140.0	0	1.00	0	0.0	0	0.0	0	0.0
32	3	3	100.0	0	3.68	0	0.0	0	0.0	0	0.0
33	3	5	100.0	2	0.08	0	0.0	2	3.0	0	0.0
34	3	6	100.0	3	0.04	0	0.0	4	5.0	0	0.0
35	3	4	100.0	6	0.12	0	0.0	3	1.0	0	1.0

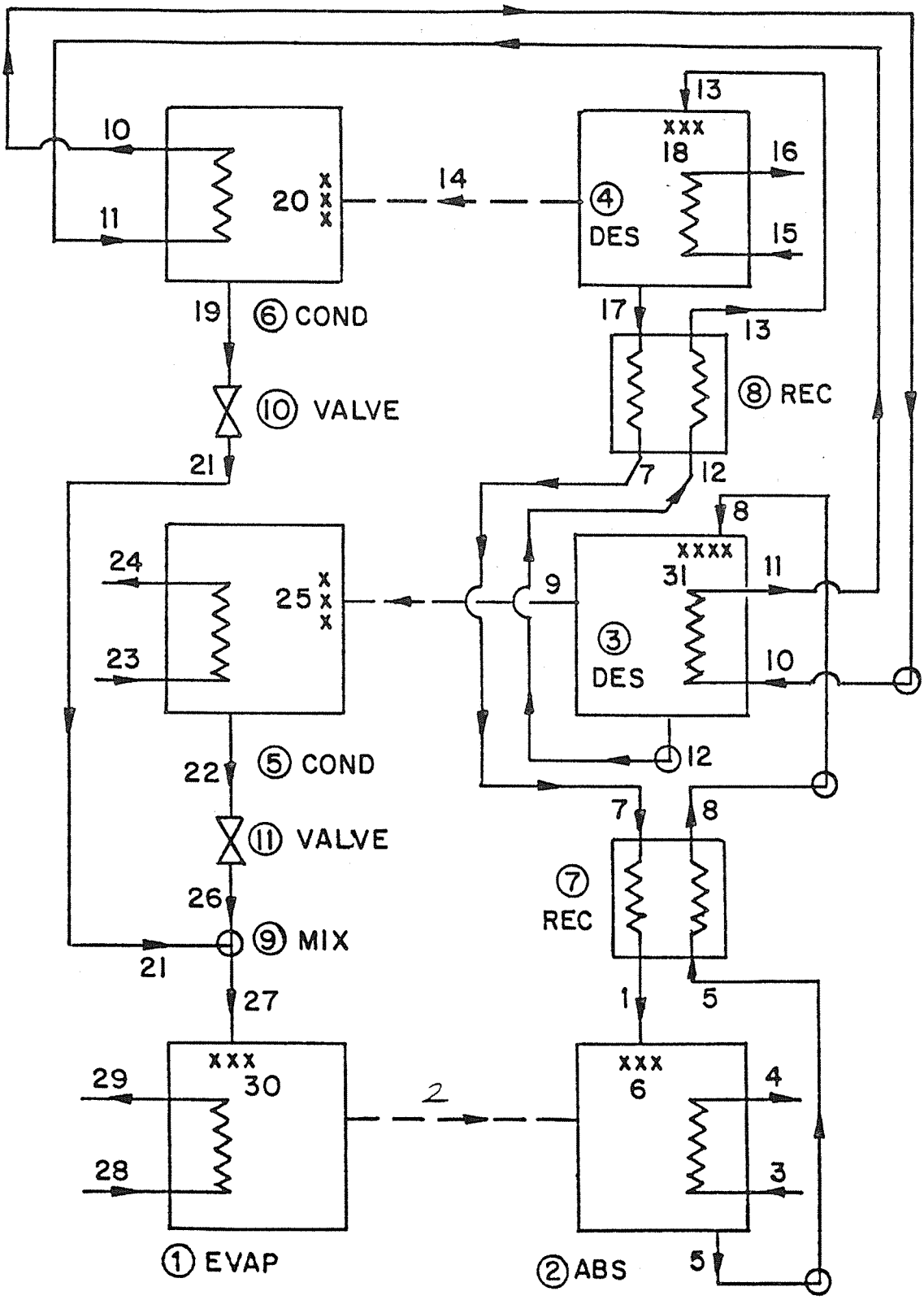

Figure B.5. Double effect chiller.

Table B.9. Data for a double stage chiller LiBr-H_2O cycle (see Fig. B.5)

```
DOUBLE STAGE CHILLER LIBR-H2O

 INPUT AND OUTPUT IN BRITISH UNITS

 THE BRITISH UNITS ARE :
 TEMPERATURES          (T)   IN   DEG F
 MASS FLOWS            (F)   IN   LB/MIN
 CONCENTRATION         (C)   IN   PERCENTS
 ENTHALPIES            (H)   IN   BTU/LB
 PRESSURES             (P)   IN   PSIA
 HEAT QUANTITIES       (Q)   IN   BTU/MIN

TOLERANCES IN F, X          1.0D-05      1.0D-08

NO. OF UNITS     11
NO. OF STATE POINTS     31

    1     5     2     0.8000    -1     0.0000
   27    2   28   29   30    0    0
    2     1     2     0.8000     1     0.0000
    1    2    3    4    5    6    0
    3     2     2     0.8000    -1     0.0000
    8    9   10   11   12   31    0
    4     2     2     0.8000    -1     0.0000
   13   14   15   16   17   18    0
    5     4     2     0.8000     1     0.0000
    9   22   23   24   25    0    0
    6     4     2     0.8000     1     0.0000
   14   19   11   10   20    0    0
    7     3     2     0.8000    -1     0.0000
    5    8    7    1    0    0    0
    8     3     2     0.8000    -1     0.0000
   12   13   17    7    0    0    0
    9     7     0     0.0000     0     0.0000
   21   26   27    0    0    0    0
   10     6    -1     0.0000     0     0.0000
   19   21    0    0    0    0    0
   11     6     0     0.0000     0     0.0000
   22   26    0    0    0    0    0

STARTING POINTS
    1     1    1 140.0    6    20.00    3   60.0    4    1.0    0    0.0
    2     3    2 140.0    2    10.00    0    0.0    4    1.0    0    1.0
    3     3    0  85.0    0    59.30    0    0.0    0    0.0    0    0.0
    4     3    1 140.0    0    59.30    0    0.0    0    0.0    0    0.0
    5     1    1 140.0    0    23.70    4   50.0    4    1.0    0    0.0
    6     1    1 140.0    6    20.00    1   59.0    4    1.0    0    0.0
    7     1    1 140.0    6    20.00    3   60.0    4    1.0    0    0.0
    8     1    1 140.0    0    23.70    4   50.0    2    3.0    0    0.0
    9     3    3 140.0    3    10.00    0    0.0    2    3.0    0    1.0
   10     3    1 140.0    0   120.00    0    0.0    0    0.0    0    0.0
   11     3    1 140.0    0   120.00    0    0.0    0    0.0    0    0.0
   12     1    3 140.0    5    10.00    2   55.0    2    3.0    0    0.0
   13     1    1 140.0    5    10.00    2   55.0    3    5.0    0    0.0
   14     3    4 140.0    4    10.00    0    0.0    3    5.0    0    1.0
   15     3    0 230.0    0   118.60    0    0.0    0    0.0    0    0.0
   16     3    1 140.0    0   118.60    0    0.0    0    0.0    0    0.0
   17     1    4 140.0    6    20.00    3   60.0    3    5.0    0    0.0
   18     1    1 140.0    5    10.00    1   51.0    3    5.0    0    0.0
   19     3    5 140.0    4    10.00    0    0.0    3    5.0    0    0.0
   20     3    5 140.0    4    10.00    0    0.0    3    5.0    0    1.0
   21     3    2 140.0    4    10.00    0    0.0    4    1.0    1    0.6
   22     3    6 140.0    3    10.00    0    0.0    2    3.0    0    0.0
   23     3    0  85.0    0   256.20    0    0.0    0    0.0    0    0.0
   24     3    1 140.0    0   256.20    0    0.0    0    0.0    0    0.0
   25     3    6 140.0    3    10.00    0    0.0    2    3.0    0    1.0
   26     3    2 140.0    3    10.00    0    0.0    4    1.0    1    0.4
   27     3    2 140.0    2    10.00    0    0.0    4    1.0    2    0.5
   28     3    0  55.0    0   402.00    0    0.0    0    0.0    0    0.0
   29     3    1 140.0    0   402.00    0    0.0    0    0.0    0    0.0
   30     3    2 140.0    2    10.00    0    0.0    4    1.0    2    0.5
   31     1    1 140.0    0    23.70    1   51.0    2    3.0    0    0.0
```

Table B.9 (continued)

LAST ITERATION NO. IS 131
IER = 1
EUCLIDEAN NORM OF FUN IS LESS THAN FTOL

STATE POINT	TEMPER.	ENTHALPY	FLOW RATE	CONCENTR.	PRESSURE	VAPOR FR.
1	1.1618D+02	4.9018D+01	2.2653D+01	5.6762D+01	1.8985D-01	0.0000D+00
2	5.1726D+01	1.0836D+03	1.0475D+00	0.0000D+00	1.8985D-01	1.0000D+00
3	8.5000D+01	5.2890D+01	5.9300D+01	0.0000D+00	0.0000D+00	0.0000D+00
4	1.0728D+02	7.5065D+01	5.9300D+01	0.0000D+00	0.0000D+00	0.0000D+00
5	1.0403D+02	3.9261D+01	2.3700D+01	5.4253D+01	1.8985D-01	0.0000D+00
6	1.1285D+02	4.7550D+01	2.2620D+01	5.6843D+01	1.8985D-01	0.0000D+00
7	1.6476D+02	7.2497D+01	2.2653D+01	5.6762D+01	1.8985D-01	0.0000D+00
8	1.4898D+02	6.1702D+01	2.3700D+01	5.4253D+01	6.4769D-01	0.0000D+00
9	1.4897D+02	1.1267D+03	5.0295D-01	0.0000D+00	6.4769D-01	1.0000D+00
10	1.5105D+02	1.1883D+02	1.2000D+02	0.0000D+00	0.0000D+00	0.0000D+00
11	1.4634D+02	1.1411D+02	1.2000D+02	0.0000D+00	0.0000D+00	0.0000D+00
12	1.4897D+02	6.3044D+01	2.3197D+01	5.5430D+01	6.4769D-01	0.0000D+00
13	2.0956D+02	9.2904D+01	2.3197D+01	5.5430D+01	3.9268D+00	0.0000D+00
14	2.2793D+02	1.1608D+03	5.4455D-01	0.0000D+00	3.9268D+00	1.0000D+00
15	2.3000D+02	1.9843D+02	1.1860D+02	0.0000D+00	0.0000D+00	0.0000D+00
16	2.2324D+02	1.9159D+02	1.1860D+02	0.0000D+00	0.0000D+00	0.0000D+00
17	2.2793D+02	1.0307D+02	2.2653D+01	5.6762D+01	3.9268D+00	0.0000D+00
18	2.2155D+02	9.8607D+01	2.3322D+01	5.5134D+01	3.9268D+00	0.0000D+00
19	1.5223D+02	1.2001D+02	5.4455D-01	0.0000D+00	3.9268D+00	0.0000D+00
20	1.5223D+02	1.1267D+03	5.4455D-01	0.0000D+00	3.9268D+00	1.0000D+00
21	5.1726D+01	1.2001D+02	5.4455D-01	0.0000D+00	1.8985D-01	9.4121D-02
22	8.7644D+01	5.5519D+01	5.0295D-01	0.0000D+00	6.4769D-01	0.0000D+00
23	8.5000D+01	5.2890D+01	2.5620D+02	0.0000D+00	0.0000D+00	0.0000D+00
24	8.7116D+01	5.4993D+01	2.5620D+02	0.0000D+00	0.0000D+00	0.0000D+00
25	8.7644D+01	1.0991D+03	5.0295D-01	0.0000D+00	6.4769D-01	1.0000D+00
26	5.1726D+01	5.5519D+01	5.0295D-01	0.0000D+00	1.8985D-01	3.3488D-02
27	5.1726D+01	8.9046D+01	1.0475D+00	0.0000D+00	1.8985D-01	6.5009D-02
28	5.5000D+01	2.3137D+01	4.0200D+02	0.0000D+00	0.0000D+00	0.0000D+00
29	5.2381D+01	2.0546D+01	4.0200D+02	0.0000D+00	0.0000D+00	0.0000D+00
30	5.1726D+01	8.9046D+01	1.0475D+00	0.0000D+00	1.8985D-01	6.5009D-02
31	1.4516D+02	5.9893D+01	2.3660D+01	5.4346D+01	6.4769D-01	0.0000D+00

THE EQUIVALENT HEAT TRANSFER QUANTITIES
FOR EVERY UNIT

NO.	TYPE	UA	EFF	CAT	LMTD
1	E	6.4022D+02	8.0000D-01	6.5472D-01	1.6272D+00
2	A	1.2003D+02	8.0000D-01	5.5695D+00	1.0955D+01
3	D	5.1192D+02	8.0000D-01	1.1777D+00	1.5860D+00
4	D	4.3388D+02	8.0000D-01	1.6891D+00	1.8713D+00
5	C	4.3116D+02	8.0000D-01	5.2890D-01	1.3145D+00
6	C	1.9362D+02	8.0000D-01	1.1777D+00	2.9271D+00
7	H	4.9881D+01	8.0000D-01	1.2147D+01	1.3886D+01
8	H	4.0624D+01	8.0000D-01	1.5793D+01	1.7051D+01
9	M	0.0000D+00	0.0000D+00	0.0000D+00	0.0000D+00
10	V	0.0000D+00	0.0000D+00	0.0000D+00	0.0000D+00
11	V	0.0000D+00	0.0000D+00	0.0000D+00	0.0000D+00

NO.	TYPE	HEAT TRANSFER	EQ. DEV.	IPINCH
1	E	1.0418D+03	0.000D+00	-1
2	A	1.3150D+03	0.000D+00	1
3	D	8.1192D+02	0.000D+00	-1
4	D	8.1192D+02	0.000D+00	-1
5	C	5.6676D+02	0.000D+00	1
6	C	5.6676D+02	0.000D+00	1
7	H	6.9267D+02	0.000D+00	-1
8	H	6.9267D+02	0.000D+00	-1
9	M	0.0000D+00	0.000D+00	0
10	V	0.0000D+00	0.000D+00	0
11	V	0.0000D+00	0.000D+00	0

APPENDIX C: USERS' MANUAL

Section 3 describes the structure of the input to the program, and an example is given for a single-stage LiBr-H_2O chiller. This manual describes in detail the parameters required on each card of the input, their mathematical symbols, and their formats. The reader is encouraged to follow the examples in Fig. 2 and Table 1 while reading this manual.

C.1 GENERAL PRELIMINARY INPUT

The first card allows the user to supply a problem title. If no title is desired, input "blanks." The card has the following format.

Title card	Columns	1	2–71 *ATITLE*
	Format	1X	A70

Explanation	
ATITLE	Name or title of problem, which can consist of any characters

The second card includes scaling parameters for normalization and has the following format.

Scaling parameter card	Columns	1–10 *TMAX*	11–20 *TMIN*	21–30 *FMAX*	31–40 *PMAX*
	Format	F10.1	F10.1	F10.1	F10.1

Explanation	
TMAX	maximum expected temperature in the system
TMIN	minimum expected temperature in the system
FMAX	maximum expected mass flow rate in the system
PMAX	maximum expected pressure in the system

The third card contains control parameters and has the following format.

Control card	Columns	1–5 *MAXFEV*	6–10 *MSGLVL*	11–15 *IUFLAG*	16–25 *FTOL*	26–35 *XTOL*
	Format	I5	I5	I5	D10.1	D10.1

Explanation	
MAXFEV	Maximum number of iterations allowed before termination.
MSGLVL = 0 = *n*	Integer flag controlling the printing of intermediate results • • • • • • • • • • • • No intermediate results are printed. Intermediate results are printed every *n* iterations
IUFLAG = 1 = 2 = 3 = 4	Integer flag indicating the system of units used for the input and final output results (intermediate results are always in British units) Input and output in British units Input in British units; output in SI units Input and output in SI units Input in SI units; output in British units
FTOL > 0	Convergence tolerance on the value of the functions' residuals. Exit from the solver routine occurs when the Euclidean norm of the residuals is less than *FTOL*.
XTOL > 0	Convergence tolerance on the values of the variables. Exit from the solver routine occurs when the relative error between two successive iterations is at most *XTOL*.

The fourth card indicates the number of units and state points in the system and has the following format.

System card	Columns	1–4 *NUNITS*	5–8 *NSP*
	Format	I4	I4

Explanation	
NUNITS	Total number of units or components
NSP	Total number of state points

C.2 UNIT INPUT

This part of the input describes the units that compose the system. The user must supply two data cards for each unit. The first card provides a unit description and has the following format.

Unit I.D. card	Columns	1-5 *NU*	6-10 *IDUNIT*	11-15 *IHT*	16-25 *HT*	26-30 *IPINCH*	31-40 *DEV*
	Format	I5	I5	I5	F10.4	I5	F10.4

Explanation	
NU	Number assigned to the unit in the cycle diagram
IDUNIT = 1 = 2 = 3 = 4 = 5 = 6 = 7 = 8 = 9	Unit type: Absorber Desorber Heat Exchanger Condenser Evaporator Valve Mixer Splitter Rectifier
IHT = 1 = 2 = 3 = 4	Integer index indicating method of specification of unit heat transfer characteristics *UA* Method *EFF* Method *CAT* Method *LMTD* Method
HT	Value of *UA* or *EFF* or *CAT* or *LMTD* according to *IHT* index
IPINCH = -1 = +1 = 0	Integer index indicating location of temperature pinch Pinch at cold end Pinch at hot end Program decides the location of the pinch
DEV	Temperature deviation from the equilibrium state

The second card describes how the unit is connected to other units in the system. The user must list the numbers of the state points associated with the unit in the system in an order corresponding to that in the unit subroutine. The card has the following format.

State point order card	Columns	1–4 ISP-1	5–8 ISP-2	9–12 ISP-3	13–16 ISP-4	17–20 ISP-5	21–24 ISP-6
	Format	I4	I4	I4	I4	I4	I4

Explanation	
ISP	State point number to be listed in the order 1 to 6, corresponding with the unit subroutine

C.3. STATE POINT INDEX

This part of the input requires one card for each state point in the cycle. The card gives the state point number, a code for the working fluid in it, and five pairs of numbers for the temperature, mass flow rate, concentration, pressure, and vapor fraction in that state point. In each pair of numbers, the first is an integer indicating a fixed or variable quantity, and the second is a real number giving a fixed value or an initial guess for the quantity in question.

The user must supply for each state point one input card that has the following format.

Initial values card	Columns	1–5 *NDUM*	6–10 *KSUB*	11–14 *ITFIX*	15–20 *T*	21–24 *IFFIX*	25–30 *F*
	Format	I5	I5	I4	F6.1	I4	F6.1
	Columns	31–34 *ICFIX*	35–40 *C*	41–44 *IPFIX*	45–50 *P*	51–54 *IWFIX*	55–60 *W*
	Format	I4	F6.1	I4	F6.1	I4	F6.1

Explanation		
NDUM	State point number in the cycle diagram	
KSUB	Type of working fluid	
= 1	$LiBr\text{-}H_2O$	solution
= 2	$H_2O\text{-}NH_3$	solution and vapor
= 3	H_2O	liquid and vapor
= 4	$LiBr\text{-}H_2O\text{-}NH_3$	solution
= 5	$LiBr/ZnBr_2\text{-}CH_3OH$	solution
= 6	CH_3OH	liquid and vapor
= 7	$LiNO_3/KNO_3/NaNO_3\text{-}H_2O$	solution

ITFIX = 0 = 1 ≥ 2	Integer index for temperature Fixed temperature Variable temperature, not equal to the temperature at any other state point Variable temp. State points for which this integer is the same have identical temperatures
T	Initial value of temperature
IFFIX	Same as *ITFIX*, for mass flow rate instead of temperature
F	Initial value of mass flow rate
ICFIX	Same as *ITFIX*, for concentration instead of temperature
C	Initial value of concentration
IPFIX	Same as *ITFIX*, for pressure instead of temperature
P	Initial value of pressure
IWFIX	Same as *ITFIX*, for vapor fraction instead of temperature
W	Initial value of vapor fraction

INTERNAL DISTRIBUTION

1. M. R. Ally
2. K. J. Ballew
3. V. D. Baxter
4. R. S. Carlsmith
5. F. C. Chen
6. G. E. Courville
7. F. A. Creswick
8. R. C. DeVault
9. P. D. Fairchild
10. S. K. Fischer
11. W. Fulkerson
12. M. A. Hensley
13. P. J. Hughes
14. M. A. Kuliasha
15. W. P. Levins
16. V. C. Mei
17. W. A. Miller
18. W. R. Mixon
19. R. W. Murphy
20. D. E. Reichle
21. R. H. Reiner
22. C. K. Rice
23. M. W. Rosenthal
24. J. R. Sand
25. R. B. Shelton
26. J. A. Shonder
27. J. N. Stone
28. E. A. Vineyard
29. A. Zaltash
30-31. Laboratory Records Department
32. Laboratory Records-RC
33. ORNL Patent Office
34-35. Central Research Library
36. Document Reference Section

EXTERNAL DISTRIBUTION

37-38. M. Aizawa, Refrigerating-Heating Equipment and Systems, Design Department, Tsuchiura Works, Hitachi, Ltd., 603, Kandatsumachi, Tsuchiura-shi, Ibaraki-ken, 300 Japan

39-40. K. Akagi, Research Center, Osaka Gas Company, Ltd., 6-19-9, Torishima, Konohana-Ku, Osaka, 554 Japan

41. L. F. Albright, School of Chemical Engineering, Purdue University, Chemical and Metallurgical Engineering Building, West Lafayette, IN 47907

42. G. Alefeld, Physik-Department, Technische Universitat Munchen, James-Franck-Strasse, D-8046 Garching b. Munchen, Federal Republic of Germany

43. D. A. Ball, Battelle Columbus Laboratories, 505 King Avenue, Columbus, OH 43201-2693

44. J. Bassols, Rendamax BV, Hamstraat 76, P.O. Box 1035, 6460 BA Kerkrade, The Netherlands

45. F. Bawel, Dometic, P.O. Box 3792, Evansville, IN 47736

46. M. Behar, Agence Francaise pour la Maitrise, de l'Energie, Route des Lucioles, 06565 Valbonne Cedex, France

47. J. Berghmans, Universiteit Leuven, Instituut Mechanica, Celestynen Laan 300A, B-3030 Heverlee, Belgium

48. T. Berntsson, Chalmers University of Technology, S-41296 Gothenburg, Sweden

49. W. J. Biermann, 45 Foxcroft Drive, Fayetteville, NY 13066

50. H. Bjurstrom, Studsvik AB, S-61182 Nykoping, Sweden

51. H. Bokelmann, GEA GmbH, R&D Department, Reisingstrasse 9, D-4630 Bochum, Federal Republic of Germany

52. U. Bonne, Honeywell Corporate Technology Center, 10701 Lyndale Avenue South, Boomington, MN 55420

53. I. Borde, The Institutes for Applied Research, Ben-Gurion University of the Negev, P.O. Box 1025, Beer-Sheva 84110, Israel

54. M. Boulanger, Centre de Recherche Industrielle du Quebec, 333, rue Franquet, Case postale 9038, Sainte-Foy (Quebec) Canada G1V 4C7

55. J. W. J. Bouma, Novem, Postbus 17, 6130 AA Sittard, The Netherlands

56. B. G. Buchanan, Department of Computer Science, University of Pittsburgh, 206 Mineral Industries Building, Pittsburgh, PA 15260

57. R. Bugarel, Institut de Genie Chimique, Chemin de la Loge, Toulouse Cedex, France

58. J. M. Calm, Air Conditioning & Refrigeration Institute, 1501 Wilson Blvd., 6th Floor, Arlington, VA 22209

59. J. Cheron, Direction de Recherche, Physico-chimie appliquee et analyse, Institut Francais du Petrole, 1 and 4 avenue de Bois-Preau BP 311, 92506 Rueil Malmaison Cedex, France

60. R. Cohen, Ray W. Herrick Laboratories, Purdue University, West Lafayette, IN 47907

61. D. D. Colosimo, Mechanical Technology, Inc., 968 Albany-Shaker Road, Latham, NY 12110

62. J. Cuttica, Gas Research Institute, 8600 West Bryn Mawr Avenue, Chicago, IL 60631

63. P. O. Danig, Technical University of Denmark, Refrigeration Laboratory, DTH 402B, DK-2800 Lyngby, Denmark

64. K. Davidson, Gas Research Institute, 8600 West Bryn Mawr Avenue, Chicago, IL 60631

65. A. C. DeVuono, Battelle, Columbus Division, 505 King Avenue, Columbus, OH 43201-2693

66. D. A. Didion, National Institute of Standards & Technology, CBT, Gaithersburg, MD 20899

67. W. Dolan, Gas Research Institute, 8600 West Bryn Mawr Avenue, Chicago, IL 60631

68. J. Engelhard, M.A.N., Neue Technologie, Dachauer Strasse 667, 8000 München 50, Federal Republic of Germany

69. D. C. Erickson, Energy Concepts Co., 627 Ridgely Ave., Annapolis, MD 21401

70. M. Falek, Gas Energy Inc., 166 Montague Street, Brooklyn, NY 11201

71. R. J. Fiskum, CE-422, 5H-048/FORS, U.S. Department of Energy, Washington, DC 20585

72. S. Freedman, Gas Research Institute, 8600 West Bryn Mawr Avenue, Chicago, IL 60631

73. P. E. Frivik, SINTEF-N.TH., Division Refr. Eng., N-7034 Trondheim, Norway

74. A. Gac, Institute International du Froid, 177, Boulevard Malesherbes, F 75017 Paris, France

75. D. Gadoth, Technion Institute of Technology, Haifa 32000, Israel

76. B. Genest, Direction des Etudes et de Recherches Nouvelles, Centre D'Essais et des Recherches sur les Utilisations du Gaz, Gaz de France, 361 Avenue du President Wilson BP 33, 93211 LaPlaine Saint-Denis Cedex, France

77. P. V. Gilli, Technische Hochschule in Graz, Inffeldgasse 25, A-8010 Graz, Atria

78. T. Gilles, Lennox Industries Incorporated, P.O. Box 809000, Dallas, TX 75380-9000

79. J. C. Goldsmith, CE-332, 5H-041/FORS, U.S. Department of Energy, Washington, DC 20585

80. K. Gommed, Technion Institute of Technology, Haifa 32000, Israel

81. E. Granryd, Royal Institute of Technology, Department of Applied Thermodynamics and Refrigeration, S-100-44 Stockholm, Sweden

82-87. G. Grossman, Technion Institute of Technology, Faculty of Mechanical Engineering, Haifa 32000, Israel

88. M. E. Gunn, CE-12/FORS, U.S. Department of Energy, Washington, DC 20585

89. H. Halozan, Graz University of Technology, Inffeldgasse 25, A-8010 Graz, Austria

90. W. T. Hanna, Battelle Columbus Laboratories, 505 King Avenue, Columbus, OH 43201-2693

91. J. R. Harnish, Central Environmental Systems, York International Corporation, P.O. Box 1592-191B, York, PA 17405-1592

92. P. Hay, PLE-PBE, KFA-Jülich GmbH, Postfach 1913, D-5170 Jülich, Federal Republic of Germany

93. F. C. Hayes, The Trane Company, 3600 Pammell Creek Road, LaCrosse, WI 54601

94. K. E. Hickman, York International Corporation, P.O. Box 1592-191A, York, PA 17405-1592

95. A. Hirsch, Midwest Research Institute, 5109 Leesburg Pike, Suite 414, Falls Church, VA 22041

96. D. L. Hodgett, Chemical & Process Industries Division, Electricity Research & Development Centre, Capenhurst Chester, UK CH1 6ES

97. K. Holzapfel, Joseph Haydn Str. 29, D-7524 Ostringen, Federal Republic of Germany

98. P. Iedema, FDO Technische Adviseurs, P.O. Box 194, 7550 AD Hengelo, The Netherlands

99. Y. Igarashi, Heat Pump Technology Center of Japan, Asuma-Shurui Bldg. 2-9-11, Kanda-Awajicho, Chiyoda-ku, Tokyo 100, Japan

100. N. Inoue, Ebara Corporation, Refrigeration Products & Systems Division, 2-1 Hon Fujisawa 4-chome, Fujisawa-shi 251, Japan

101. N. Isshiki, Nihon University, Koriyama 963, Japan

102. P. Joyner, Electric Power Research Institute, P.O. Box 10412, Palo Alto, CA 94303

103. T. Kapus, Building Equipment Division, CE-422, 5H-048/FORS, U.S. Department of Energy, Washington, DC 20585

104. T. Kashiwagi, Dept. of Mech. Systems Engrg., Tokyo University of Agriculture & Technology, 24-16, Nakamachi 2-chome, Koganei, Tokyo 184, Japan

105. H. Kawamoto, Gas Utilization Development Center, Osaka Gas Company Ltd., 3-2-95 Chiyosaki, Nishi-Ku, Osaka 550, Japan

106. A. Kawata, Takasago Research & Development Center, Mitsubishi Heavy Industries, Ltd., 2-1-1, Shinhama, Arai-Cho, Takasago, Hyogo Pref. 676 Japan

107. K. Kazmer, Gas Research Institute, 8600 West Bryn Mawr Avenue, Chicago, IL 60641

108. J. U. Keller, Institut fur Fluid-und-Thermodynamik, Universitat Silgen, Postfach 101240, 5900 Siegen, Federal Republic of Germany

109. S. A. Klein, University of Wisconsin, Mechanical Engineering Department, Madison, WI 53706

110. G. Knobbout, TNO-MT, Laan van Westenenk 501, 7334 DT Apeldoorn, Netherlands

111. K. F. Knoche, Lehrstuhl fur Technische Termodynamik, RWTH Aachen, Schinkelstrasse 8, 5100 Aachen, Federal Republic of Germany

112. S. Kurosawa, Research Department, Advanced Cogeneration Technology Research Association, 9-6 Shinbashi 6 Chome, Minato-Ku, Tokyo, Japan

113. A. Lannus, Electric Power Research Institute, P.O. Box 10412, Palo Alto, CA 94303

114. Z. Lavan, Department of Mechanical Engineering, Illinois Institute of Technology, Chicago, IL 60616

115. P. LeGoff, Laboratoire des Sciences du Genie Chimique, CNRS-ENSIC-INPL-Nancy, France

116. T. A. Lott, Research and Development Department, Electric Power Research Institute, 3400 Crow Canyon Road, San Ramon, CA 94583

117. I. R. G. Lowe, NRC-Canada, Bldg. R.105, Montreal Rd., Ottawa K1A OR6 Canada

118. B. Lundquist, Swedish Council for Building Research, St. Goransgatan 66, S-11233 Stockholm, Sweden

119. R. A. Macriss, Phillips Engineering Company, 721 Pleasant Street, St. Joseph, MI 49085

120. W. Malewski, Borsig GmbH, Berlinerstr. 27/33, D-1000 Berlin, Federal Republic of Germany

121. A. Manago, Research Center, Osaka Gas Company, Ltd., 6-19-9, Torishima, Konohana-Ku, Osaka, 554 Japan

122. J. Marsala, Tecogen, Inc., P.O. Box 9046, Waltham, MA 02254-9046

123. K. Mashimo, Sanyo Electric Company, Ltd., 180 Sakata Oizumi, Ora Gunma 370-05, Japan

124. K. Matsuo, Mechanical Engineering Research Laboratory, Hitachi, Ltd., Tsuchiura, Japan

125. L. A. McNeely, 7310 Steinmeier Drive, Indianapolis, IN 46250

126. B. Meckel, Westfalische Ferngas - AG, Kampstr. 49, Postfach 495, 4600 Dortmund 1, Federal Republic of Germany

127. G. Melikian, United Technology Research Center, East Hartford, CT 06108

128. M. S. Menzer, American Gas Association, 1515 Wilson Boulevard, Arlington, VA 22209

129. F. Meunier, Laboratoire de Thermodynamique des Fluides, CNRS, Campus Universitaire-Bat 502 Ter., 91405 Orsay Cedex, France

130. A. Meijnen, MT-TNO, P.O. Box 342, NL-7300AH Apeldoorn, The Netherlands

131. J. Mezon, Direction des Etudes et de Recherches Nouvelles, Centre d'Essais et des Recherches sur les Utilisations du Gaz, Gaz de France, 361 Avenue du President Wilson BP 33, 93211 LaPlaine Saint-Denis Cedex, France

132. J. P. Millhone, CE-13, 5E-080/FORS, U.S. Department of Energy, Washington, DC 20585

133. J. M. Miriam, Utilization Efficiency Division, Watson House, British Gas Corporation, Peterborough Road, London, SWG 3HN, England

134. E. Miura, Heat Pump Technology Center of Japan, Azuma Shurui Bldg., 9-11, Kandaawaji-cho 2-chome, Chiyoda-ku, Tokyo 101, Japan

135. H. Moriyama, Agency of Industrial Science & Technology/MITI, 1-3-1 Kasumigaseki, Chiyoda-ku, Tokyo 100, Japan

136. D. E. Morrison, 333 Oxford Road, East Lansing, MI 48823

137. F. Moser, Institut fur Verfaherstechnik, Technische Universitat Graz, Inffeldgase 25, A-8010 Graz, Austria

138. H. P. Muhlmann, Ruhrgas AG, Halterner Strasse 125, 427 Dorsten, Federal Republic of Germany

139. K. P. Murphy, Allied-Signal, P.O. Box 1087 R, Morristown, NJ 07960

140. G. H. Myers, Gas Research Institute, 8600 West Bryn Mawr Avenue, Chicago, IL 60631

141. S. Nagamatsu, Agency of Industrial Science & Technology, MITI, 1-3-1, Kasumigaseki, Chiyoda-Ku, Tokyo

142. Y. Nagaoka, Heat Pump Systems, Gas Utilization Group, Research and Development Institute, 16-25 Shiobaura, 1-chome, Minato-Ku, Tokyo, 105, Japan

143. S. I. Nakatsugawa, Air Conditioning Research and Development Laboratories, Yazaki Corporation, 1370 Koyasu-Cho Hamamatsu-Shi, Shizuoka-PRF Japan

144. S. Nakayama, AIST Ministry of International Trade & Industry, 1-3-1 Kasumigaseki, Chiyoda-ku-Tokyo, Japan

145. T. Nakayama, Air Conditioning Headquarters, Sanyo Electric Co., Ltd., 180, Sakata Oizumi-Machi, Ora-Gun, Gunma, Japan

146. M. Naradoslawsky, Institut fur Verfahrenstechnik, A-8010 Graz, Inffeldgasse 25, Austria

147. N. Nishiyama, Research and Development Institute, 16-25, Shibaura, 1-Chome, Minato-Ku, Tokyo, 105, Japan

148. U. Nowaczyk, Institut fur Angewandte, Universitat Essen, Universitat Strasse 15, Postfach 6843, D-4300 Essen 1, Federal Republic of Germany

149. T. Ohuchi, Mechanical Engineering Research Laboratory, Hitachi, Ltd., 502, Kandatsu-machi, Tsuchiura-shi, Ibaraki-ken, 300 Japan

150. K. Ooka, Engineering Department-I, Kawasaki Heavy Industries, Ltd., 1-1, Higashikawasaki-Cho 3 Chome, Chuo-Ku, Kobe 650-91 Japan

151. M. Otake, Takasago Research & Development Center, Mitsubishi Heavy Industries, Ltd., 2-1-1, Shinhama, Arai-Cho, Takasago, Hyogo Pref. 676 Japan

152. E. Ozaki, Central Research Laboratory, Mitsubishi Electric Corporation, 1-1, Tsukaguchi-Honmachi 8-Chome, Amagasaki, Hyogo, 661 Japan

153. D. Pellish, CE-332, 5H-041/FORS, U.S. Department of Energy, Washington, DC 20585

154. H. Perez-Blanco, 314 Mechanical Engineering Building, Pennsylvania State University, University Park, PA 16802

155. S. Petty, Columbia Gas System Service Corporation, 1600 Dublin Road, P.O. Box 2318, Columbus, OH 43215

156. B. A. Phillips, Phillips Engineering Company, 721 Pleasant Street, St. Joseph, MI 49085

157. B. Plzak, Refrigeration Systems Division, The Trane Company, 3600 Pammel Creek Road, LaCrosse, Wi 54601-7599

158. R. Radermacher, University of Maryland, Mechanical Engineering Department, College Park, MD 20742

159. W. Raldow, Swedish National Board for Technical Development, Box 43200, 100 72 Stockholm, Sweden

160. J. Rasson, Lawrence Berkeley Laboratory, 1 Cyclotron Road, Berkeley, CA 94720

161. V. Recchi, National Research Council-PFE 2, c/o O.T.B., P.O. Box 330, I-70100 Bari, Italy

162. E. A. Reid, American Gas Cooling Center, 1515 Wilson Boulevard, Arlington, VA 22209

163. R. C. Reimann, Carrier Corporation, 6304 Carrier Parkway, P.O. Box 4800, Syracuse, NY 13221

164. G. M. Reistad, Department of Mechanical Engineering, Oregon State University, Corvallis, OR 97331

165. H. H. Rhea, Lennox Industries, Inc., P.O. Box 877, Carrollton, TX 75006

166. U. Rockenfeller, Rocky Research, 674 Wells Road, Boulder City, NV 89005

167. A. Rojey, Direction de Recherche, Physico-shimie appliquee et analyse, Institut Francais du Petrole, 1 and 4 avenue de Bois-Preau BP 311, 92506 Rueil Malmaison Cedex, France

168. J. D. Ryan, CE-422, 5H-048/FORS, U.S. Department of Energy, Washington, DC 20585

169. W. A. Ryan, Gas Research Institute, 8600 West Bryn Mawr Avenue, Chicago, IL 60631

170. T. Saito, The University of Tokyo, Department of Mechanical Engineering, 7-3-1 Hongo, Bunkyo, Tokyo 114, Japan

171. N. Sawada, Sanyo, 180, Sakata Oizumi-Machi, Ora-Gun, Gunma, Japan

172. U. Schaerer, Swiss Federal Office of Energy, CH-3003 Bern, Switzerland

173. J. Scharfe, Physik Dept. E19, T.U. Muenchen-Garching, D-8046 Muenchen Garching, Federal Republic of Germany

174. P. Scheihing, CE-141, 5G-067/FORS, U.S. Department of Energy, Washington, DC 20585

175. E. L. Schmidt, Institut fur Angewandte, Thermodynamik und Klimatechmik, Universitat Essen, Universitat Strasse 15, Postfach 6843, D-4300 Essen 1, Federal Republic of Germany

176. T. Setoguchi, 107 Mechanical Engineering Building, Pennsylvania State University, University Park, PA 16802

177. F. Setterwall, The Royal Institute of Technology, Department of Chemical Engineering, S-100 44 Stockholm, Sweden

178. S. V. Shelton, Thermax, Inc., 296 14th Street NW, Atlanta, GA 30318

179. I. Smith, Applied Energy Group, School of Mechanical Engineering, Cranfield Institute of Technology, England

180. K. Snelson, National Research Council Canada, Div. of Mechanical Engineering, Montreal Road, Ottawa, Ontario K1A OR6, Canada

181. H. O. Spauschus, Georgia Institute of Technology, Energy and Materials Sciences Laboratory, Atlanta, GA 30332

182. W. R. Staats, Gas Research Institute, 8600 West Bryn Mawr Avenue, Chicago, IL 60631

183. T. Statt, CE-422, 5H-048/FORS, U.S. Department of Energy, Washington, DC 20585

184. F. Steimle, Institut for Angewandte, Thermodynamik und Klimatechmik, Universitat Essen, Universitat Strasse 15, Postfach 6843, D-4300 Essen 1, Federal Republic of Germany

185-186 K. Stephan, Institut fur Technische Thermodynamik und Thermische Verfahrenstechnik, Universitat Stuttgart, Pfaffenwaldring 9, FA 1705, Postfach 1140, 7000 Stuttgart 80, Federal Republic of Germany

187. H. Stierlin, Sibir AG, Munohwiesen 5, Postfach 362, CH-8952 Schlieren, Switzerland

188. P. Swenson, Consolidated Natural Gas, CNG Tower, Pittsburgh, PA 15222-3199

189. P. F. Swenson, The East Ohio Gas Company, P.O. Box 5759, Cleveland, OH 44101

190. H. Takenouchi, Technology Research Association of Super Heat Pump Energy Accumulation System, Takara Bldg., 1-6 Kanda-Ogawanmachi, Chiyodaku, Tokyo, Japan

191. C. Trepp, Eidgenossische Technische Hochschule, Institut fur Verfahrens und Kaltechnik, ETH-Zentrum, 8092, Switzerland

192. T. Uemura, Kansai University, Faculty of Engineering, Senriyama, Suita, Osaka, 564 Japan

193. D. Uselton, Lennox Industries, Inc., P.O. Box 877, Carrollton, TX 75011-0877

194. H. van der Ree, TNO-MT, Laan van Westenenk 501, NL-7334 DT Apeldoorn, The Netherlands

195. G. C. Vliet, Taylor Hall 116, The University of Texas, Austin TX 78712

196. M. Wahlig, Lawrence Berkeley Laboratory, 1 Cyclotron Road, Berkeley, CA 94720

197. K. Watanabe, Department of Mechanical Engineering, Keio University, 3-14-1, Hiyoshi, Kohoku-Ku, Yokohama 223, Japan

198. W. H. Wilkinson, Battelle Columbus Laboratories, 505 King Avenue, Columbus, OH 43201-2693

199. M. Williams, Department of Economics, Northern Illinois University, DeKalb, IL 60115

200. B. D. Wood, College of Engineering and Applied Science, Arizona State University, Tempe, AZ 84281

201. T. Yoshie, Appliance and Installation R&D Dept., Tokyo Gas Co., Ltd., 5-20 Kaigan 1-Chome, Minato-Ku, Tokyo 105, Japan

202. T. Yoshii, Mitsubishi Heavy Industries, Ltd., 5-1, Marunouchi 2-chome, Chiyoda-ku, Tokyo, Japan

203. T. Zawacki, Phillips Engineering Company, 721 Pleasant Street, St. Joseph, MI 48095

204. P. Zegers, Commission of the European Communities, Directorate General XII, Wetstraat 200, B-1049 Brussels, Belgium

205. Office of the Assistant Manager for Energy R&D, U.S. Department of Energy, Oak Ridge Operations, Oak Ridge, TN 37831

206-217. Technical Information Center, Department of Energy, P.O. Box 62, Oak Ridge, TN 37831