ENERGY

CONSERVATION

ORNL/Sub/83-43337/2

Absorption Heat Pump Simulation and Studies

A Modular Computer Simulation of Absorption Systems

Final Report

Principal Investigators:

Gershon Grossman
Elizabeth Michelson

Report Prepared by

TECHNION—ISRAEL INSTITUTE OF TECHNOLOGY
Haifa, Israel

under
Subcontract 19X-43337V
for
OAK RIDGE NATIONAL LABORATORY
operated by
MARTIN MARIETTA ENERGY SYSTEMS, INC.
for the

U.S. DEPARTMENT OF ENERGY

OFFICE OF BUILDINGS AND COMMUNITY SYSTEMS

Printed in the United States of America. Available from
National Technical Information Service
U.S. Department of Commerce
5285 Port Royal Road, Springfield, Virginia 22161
NTIS price codes—Printed Copy: A05 Microfiche A01

This report was prepared as an account of work sponsored by an agency of the United States Government. Neither the United States Government nor any agency thereof, nor any of their employees, makes any warranty, express or implied, or assumes any legal liability or responsibility for the accuracy, completeness, or usefulness of any information, apparatus, product, or process disclosed, or represents that its use would not infringe privately owned rights. Reference herein to any specific commercial product, process, or service by trade name, trademark, manufacturer, or otherwise, does not necessarily constitute or imply its endorsement, recommendation, or favoring by the United States Government or any agency thereof. The views and opinions of authors expressed herein do not necessarily state or reflect those of the United States Government or any agency thereof.

ORNL/Sub/83-43337/2

ABSORPTION HEAT PUMP SIMULATION AND STUDIES

A MODULAR COMPUTER SIMULATION OF ABSORPTION SYSTEMS

FINAL REPORT

Principal Investigators:

Gershon Grossman
Elizabeth Michelson

Date Published: April 1986

Report Prepared by

TECHNION—ISRAEL INSTITUTE OF TECHNOLOGY
Haifa, Israel

under
Subcontract 19X-43337V

for

OAK RIDGE NATIONAL LABORATORY
Oak Ridge, Tennessee 37831
operated by
MARTIN MARIETTA ENERGY SYSTEMS, INC.
for the
U.S. DEPARTMENT OF ENERGY
under Contract DE-AC05-84OR21400

CONTENTS

LIST OF FIGURES v

LIST OF TABLES vii

NOMENCLATURE ix

ACKNOWLEDGMENT xi

ABSTRACT xiii

SUMMARY xv

1. INTRODUCTION 1

2. DESCRIPTION OF THE PROGRAM 3

   2.1 PROGRAM STRUCTURE 3
   2.2 INPUT DATA 3
   2.3 UNIT SUBROUTINES 8
   2.4 SOLUTION METHOD 17
   2.5 CONSTRAINTS 18

3. RESULTS 21

   3.1 NONVOLATILE ABSORBENT 21
   3.2 VOLATILE ABSORBENT 21
   3.3 VALIDATION 25
      3.3.1 Selection of Experimental Runs for the Validation 25
      3.3.2 Comparison of Experimental and Computed Results 29

4. CONCLUSION 35

REFERENCES 37

Appendix: RESULTS OF CALCULATIONS 39

LIST OF FIGURES

2.1 Schematic representation of the simulated single-stage heat transformer with numbered state points and units 4

2.2 Schematic representation of the simulated double-stage heat transformer with numbered state points and units 5

2.3 Schematic representation of the simulated single-stage chiller with numbered state points and units 6

2.4 Flow chart showing overall structure of the simulation program 7

2.5 Symbolic sketch of absorber; state points are numbered as inside the corresponding unit subroutine 8

2.6 Symbolic sketch of desorber; state points are numbered as inside the corresponding unit subroutine 9

2.7 Symbolic sketch of recuperator; state points are numbered as inside the corresponding unit subroutine 9

2.8 Symbolic sketch of condenser; state points are numbered as inside the corresponding unit subroutine 10

2.9 Symbolic sketch of evaporator; state points are numbered as inside the corresponding unit subroutine 10

2.10 Symbolic sketch of mixer; state points are numbered as inside the corresponding unit subroutine 11

2.11 Symbolic sketch of splitter; state points are numbered as inside the corresponding unit subroutine 11

3.1 Results for the single-stage heat transformer, Li Br-water 22

3.2 Results for the single-stage heat transformer, water-NH_3 23

3.3 Results for the double-stage heat transformer, Li Br-water 24

3.4 Results for the single-stage chiller, Li Br-water 26

LIST OF TABLES

3.1 Different sets of initial temperatures tested for the various systems 25

3.2 Values of selection criteria for the experimental runs used in validation 29

3.3 Summary of differences between calculated and measured values of concentration (C_c, C_m) and temperature (T_c, T_m) and COP 30

3.4 Differences between computed (T_c) and measured (T_m) temperatures (°F) 30

A.1 Single-stage heat transformer, Li Br-water 42

A.2 Single-stage heat transformer, water-ammonia 45

A.3 Double-stage heat transformer, Li Br-water 48

A.4 Single-stage chiller, Li Br-water 53

A.5 Single-stage heat transformer, Li Br-water: run 114 57

A.6 Single-stage heat transformer, Li Br-water: run 137 59

A.7 Single-stage heat transformer, Li Br-water: run 145 61

A.8 Single-stage heat transformer, Li Br-water: run 149 63

A.9 Single-stage heat transformer, Li Br-water: run 153 65

A.10 Single-stage heat transformer, Li Br-water: run 156 67

A.11 Single-stage heat transformer, Li Br-water: run 158 69

A.12 Single-stage heat transformer, Li Br-water: run 161 71

A.13 Single-stage heat transformer, Li Br-water: run 162 73

A.14 Single-stage heat transformer, Li Br-water: run 167 75

NOMENCLATURE

C_j	Concentration of absorbate at state point j (%)
C_c, C_m	Concentration, calculated and measured values
h_j	Enthalpy at state point j (Btu·lb^{-1})
$\dot{m}_j$	Total mass flow rate at state point j (lb·min^{-1})
P_j	Pressure at state point j (psi)
T_j	Temperature at state point j (°F)
T	Temperature (°F)
δT	Relative error in a measured temperature
T_c, T_m	Temperature, calculated and measured values (°F)
UA	Heat transfer coefficient, surface area product; a constant required as data input (Btu·min^{-1}·°F^{-1})
$\delta(UA)$	Relative error on calculated UA
Q_i	Heat transferred through unit i (Btu·min^{-1})
δQ	Relative error in a measured value of Q
δ_i	RHS of an equation, which should tend to zero near the solution
n	Total number of variables
x_i	Variable i $(i = 1,n)$
x_i^K	Value of x_i at iteration number K
δx	Relative error on any parameter x
Δx	Absolute error on any parameter x
$\max_i \lvert x_i^{K+1} - x_i^K \rvert$	Convergence is said to occur when
$\sqrt{\Sigma \delta_i^2}$	$\sqrt{\Sigma \delta_i^2} < \epsilon_1$ or
	$\max_i \lvert x_i^{K+1} - x_i^K \rvert < \epsilon_2$
ϵ_1, ϵ_2	Specified convergence criteria
Strong solution	Solution with strong absorption capability, i.e., low in absorbate
Weak solution	Solution with weak absorption capability, i.e., high concentration of absorbate

Subscripts

A	Absorber	M	Mixer
C	Condenser	R	Recuperator
D	Desorber	S	Splitter
E	Evaporator	$\rightarrow Q$	Direction of heat flow

ACKNOWLEDGMENT

The authors would like to thank Dr. A. Sidi, at the Department of Computer Science at the Technion, for his suggestion of the alternative constraint method.

ABSTRACT

A computer simulation program for absorption systems has been developed in a flexible and modular form, which makes it possible to simulate various cycle configurations with different working fluids. The user must supply input containing information about given flow rates and temperatures, as well as characteristics of the various subunits of the system. In addition, the user must convey to the computer an image of the cycle in question. Based on this information, the program calculates the temperature, composition, flow rate, and pressure at each state point of the system and the heat quantities at each unit, from which the coefficient of performance may be determined.

The program has been tested on single- and double-stage absorption heat pumps and heat transformers, with lithium bromide-water and water-ammonia as the working fluids. The results have been compared with experimental data from tests of a lithium bromide-water heat transformer, giving good agreement.

SUMMARY

A computer simulation code for absorption systems has been written in a flexible and modular form which makes it possible to model various system configurations and working fluids with a minimum contribution from the user. The code is based on unit subroutines modeling each of the absorption system's components and a main program that calls them and links up the units according to the user's specification.

The code has been tested on single- and double-stage heat transformers and a single-stage chiller, operated with two working fluids, lithium bromide-water (a nonvolatile absorbent) and water-ammonia (a volatile absorbent). The units included at present are an absorber, an evaporator, a desorber, a condenser, a recuperator, a mixer, a rectifier, and a splitter.

The program has been written in a user-oriented form. The user has only to specify the following: the state points defining each unit; indices specifying whether its parameters (temperature, pressure, concentration, and flow rate) are fixed or variable and which type of working fluid corresponds to the state point; the *UA* value of each unit; and the values of the fixed temperatures and flows in the system.

The physics yields a system of nonlinear simultaneous equations that are solved by the routine HYBRD1. The program was specially designed to converge to the physical solution from any initial values of the variable parameters. This was done by applying constraints to the temperatures and pressures. Both HYBRD1 and the constraint method proved to be sturdy and reliable.

The output of the program consists of information on the convergence; the temperature, pressure, concentration, and flow rate at each state point; the heat transfer through each unit; and the overall coefficient of performance (COP). Detailed validation was carried out with experimental runs of a single-stage Li Br-H_2O heat transformer at Oak Ridge National Laboratory. The agreement between simulation and experiment was very satisfactory.

1. INTRODUCTION

Absorption heat pumps, first developed in the 19th century, have received growing attention in the past two decades. With the increasing cost of electricity, the particular features of this heat-powered cycle have made it attractive for both residential and industrial applications. Solar-powered absorption chillers, gas-fired residential and commercial-sized heat pumps and waste heat-powered industrial temperature boosters are a few of the applications in which intensive research and development have been conducted.

With the development of working absorption systems, there has been a growing need for reliable and effective system simulations. Several computer models have been described in the literature, dealing with a variety of applications, cycles, and working substances.[1-4] The results of some of these models have been compared with experimental data and found to be in good agreement. The simulation codes have proved to be a very valuable tool for research and development and for improvements in design to be implemented during manufacturing.

The above simulation models have a common feature in that they are system specific, that is, they simulate one particular system with a particular design, flow arrangement, and working material. The objective of the present project has been to develop a modular computer simulation code capable of simulating absorption heat pumps in different cycle configurations and with different working fluids. The usefulness of such a code has become apparent in repeated attempts under absorption research programs to evaluate new ideas for absorption cycles and working substances and to compare them with existing ones. It was soon recognized that the writing of a new program for each new system is not the right approach. In fact, a general, user-oriented program with built-in flexibility could save a great deal of time and effort.

This report describes the development of the modular simulation code, which has now been tried with three different cycle configurations and two working fluids. It is believed that the usefulness of the code goes beyond the evaluation of new ideas for advanced cycles and/or new working fluids. The code can be used effectively for predicting the performance of a given system under varying operating conditions as well as for preliminary design studies.

2. DESCRIPTION OF THE PROGRAM

2.1 PROGRAM STRUCTURE

The main objective of the program has been to make the simulation flexible and user oriented. This leads to two requirements. First, the program must be modular so that different components and units can be connected to each other to make various configurations of the working system. Second, the user must be required to supply a limited amount of input data, which are to be in a straightforward form.

Recognizing that each absorption system consists of a number of standard components (e.g., evaporator, rectifier, absorber, desorber, condenser), the following logic has been created for the program. Each basic component is simulated by a unit subroutine that provides a mathematical expression of the physics of that component. Each unit subroutine contains all the fundamental equations applicable to the unit, such as energy balance, mass balance, heat transfer, etc. The unit subroutines call on property data subroutines for the thermodynamic properties of the working fluids. This separation between the unit subroutines and property data subroutines provides the flexibility for each unit to operate with different working fluids.

The main program calls the individual unit subroutines that have been specified by the user, thus composing the complete system. The units can be called upon in any order. The connection between different units is made automatically by the program, which specifies the output of one to be the input of the other.

In its present form, the program contains unit subroutines for the following components: an absorber, a desorber, a recuperator (liquid-to-liquid heat exchanger), a condenser, an evaporator, a mixer, and a splitter. Various systems can be created; those for which numerical results will be presented are shown in Figs. 2.1 through 2.3. These include a single-stage heat transformer, a double-stage heat transformer, and a single-stage chiller. The overall structure of the program is illustrated in Fig. 2.4. An elaboration of the procedures in Fig. 2.4 can be found in the sections indicated on the flow chart.

2.2 INPUT DATA

The user is first required to draw a symbolic sketch (block diagram) of the system to be simulated, showing a complete breakdown into all the basic components and their interconnections (examples are given in Figs. 2.1-2.3). In the schematic diagram, the user is required to label each state point and each unit. Next, the user prepares the input, which consists of a list of units and a list of state points.

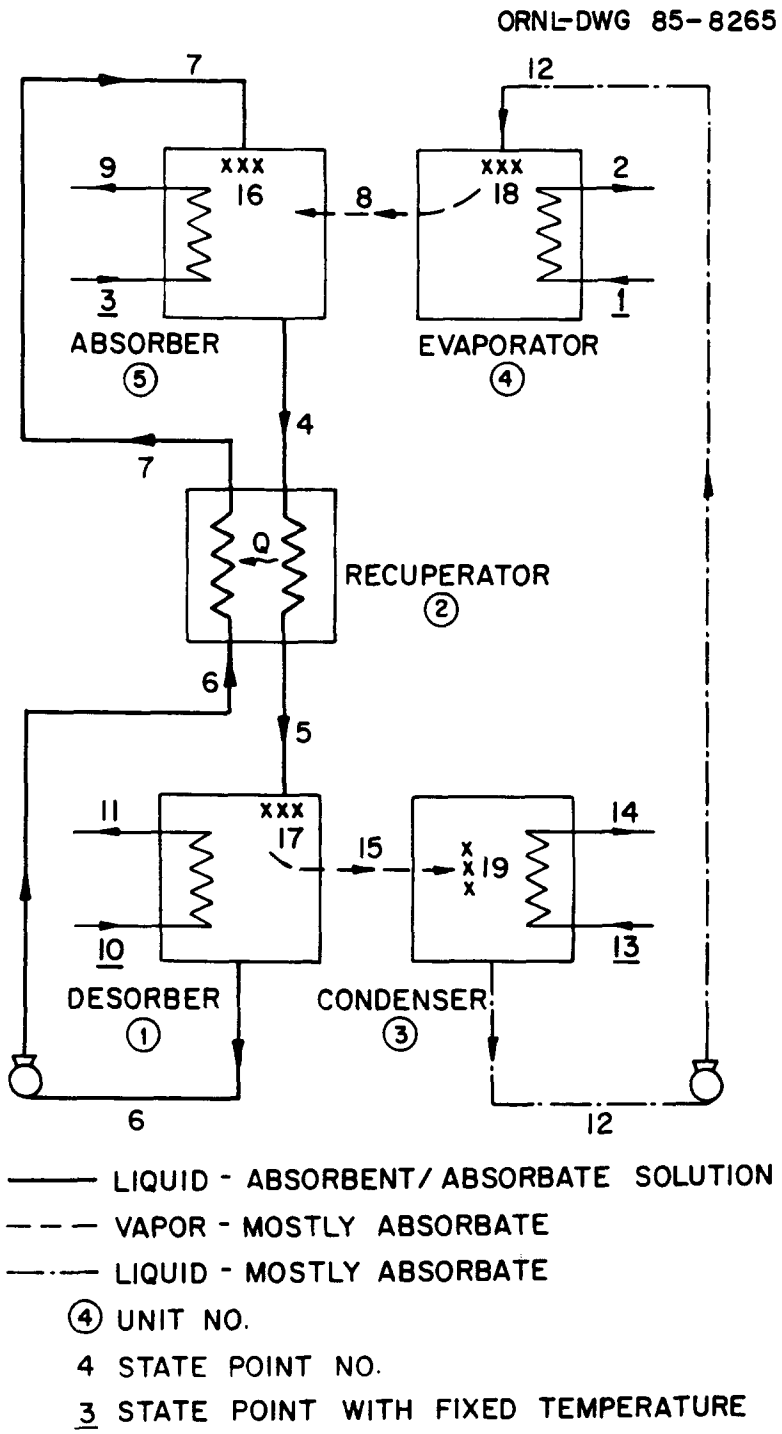

Fig. 2.1 Schematic representation of the simulated single-stage heat transformer with numbered state points and units.

ORNL-DWG 85-8262

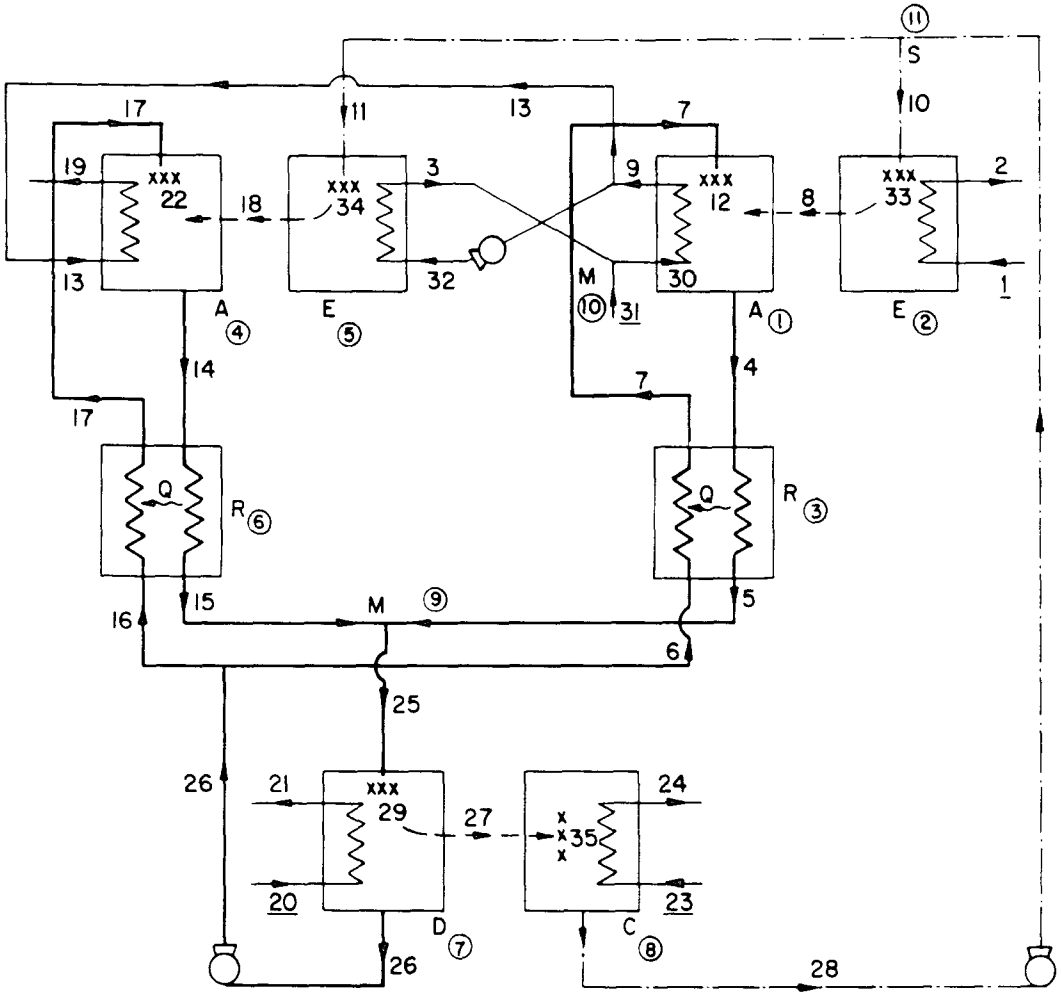

Fig. 2.2 Schematic representation of the simulated double-stage heat transformer with numbered state points and units.

A state point is defined as a condition of the working fluid characterized by and distinguished from another state point by its temperature, flow rate, concentration, or pressure. Generally each input and output point of a unit and possibly one or two internal points where necessary are allocated state points.

The input data for each state point consist of first an integer, which indicates whether the working material at this point is a solution, a vapor, or pure water (liquid), and second four pairs of numbers, which represent the temperature, flow rate, concentration, and pressure at the point. In each pair the first number is an identifying integer, which describes whether the parameter (temperature, etc.) is a given constant or a variable to solve for, and in the latter case, whether it is equal to the same variable at another state

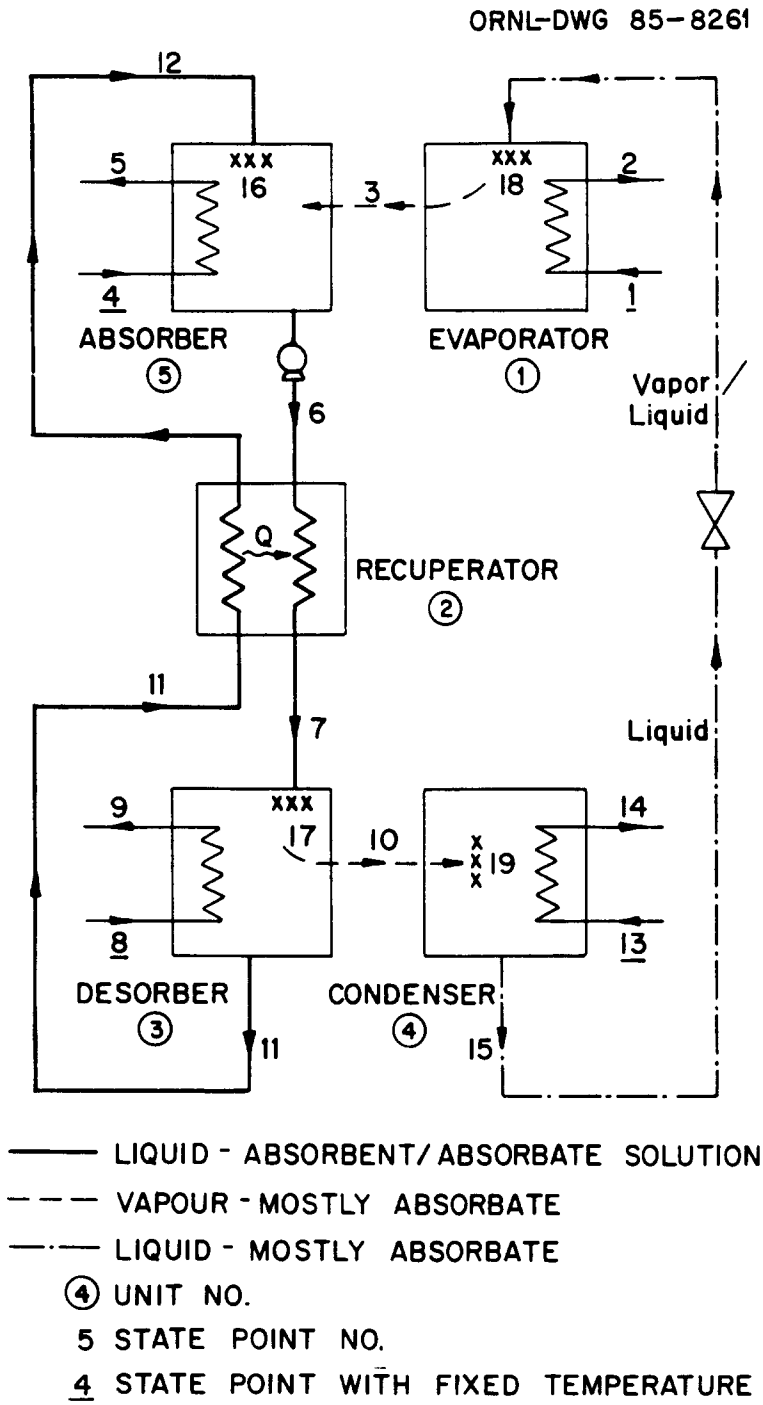

Fig. 2.3 Schematic representation of the simulated single-stage chiller with numbered state points and units.

ORNL-DWG 85-6970

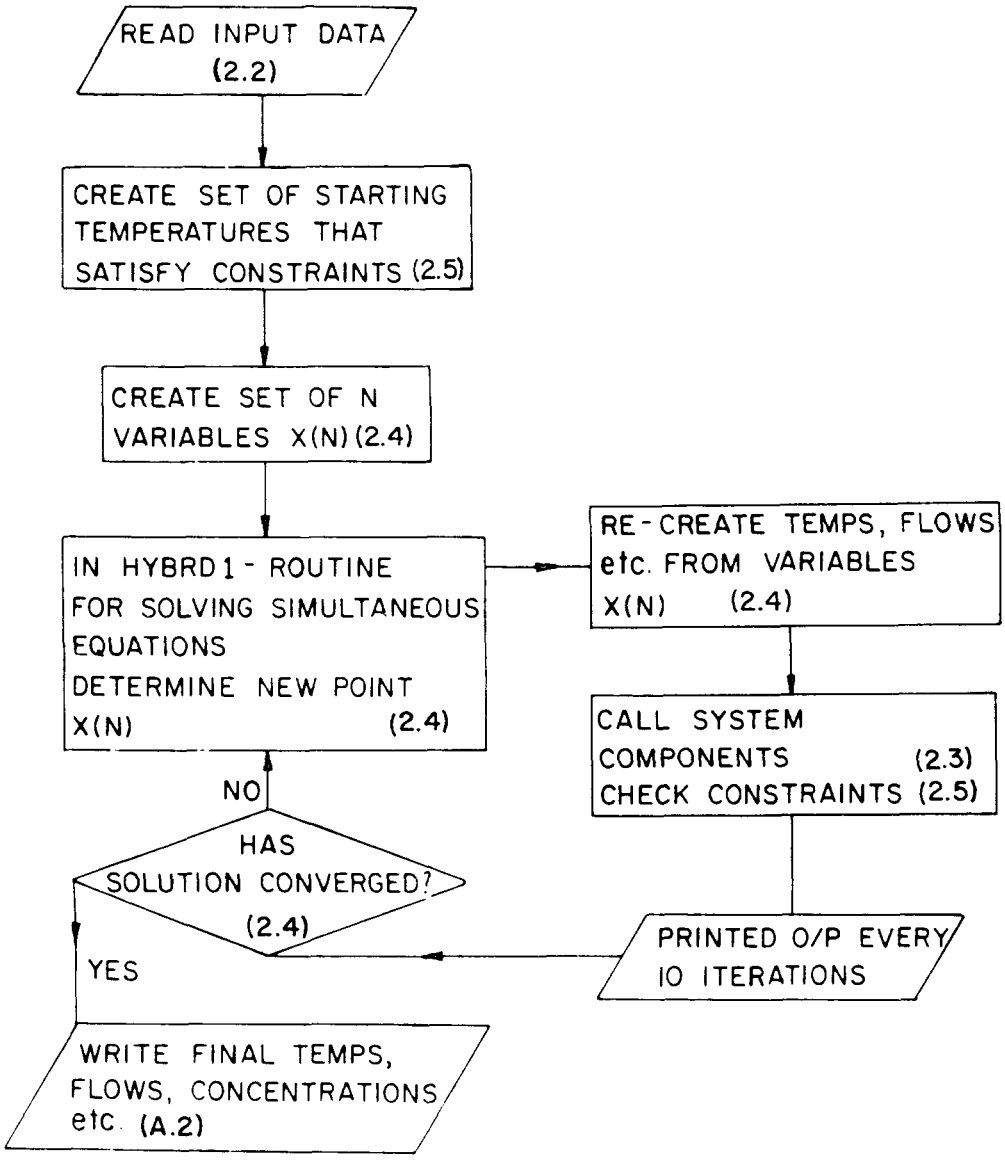

Fig. 2.4 Flow chart showing overall structure of the simulation program.

point. The second number is the initial value for the parameter. If the parameter is a given constant, its value is obviously fixed. Note that the constants should represent a realistic set of operating conditions; otherwise a solution cannot exist.

If the parameter is variable, its initial value may be arbitrarily selected. Since the user cannot be expected to know anything about the solution a priori, and thus to estimate a reasonable initial guess, the solution method has been specially adapted (Sect. 2.5) by the authors to accept any initial values for the variables.

Preceding the list of state points and their parameters is a specification of each unit or component in the system. A unit specification consists of a unit number, an identification number, the unit type (i.e., absorber, desorber, etc.), the given *UA* value (which is a constant), and state points belonging to the unit in an order corresponding to that of the unit subroutine. From the sketch of the whole system (Figs. 2.1-2.3), the state points corresponding to each unit can be selected. For example, points 1, 2, 3, 4, 5, and 6 in the absorber subroutine (Fig. 2.5) correspond to points 7, 8, 3, 9, 4, and 16 in the single-stage heat transformer (Fig. 2.1) and to points 7, 8, 30, 9, 4, and 12 and 17, 18, 13, 19, 14, and 22 for the two absorbers in the double-stage heat transformer (Fig. 2.2). The order in which the units are called (represented by the unit numbers in Figs. 2.1-2.3 and Appendix Tables A.1-A.4) is unimportant. The unit numbers are simply for reference to the figures.

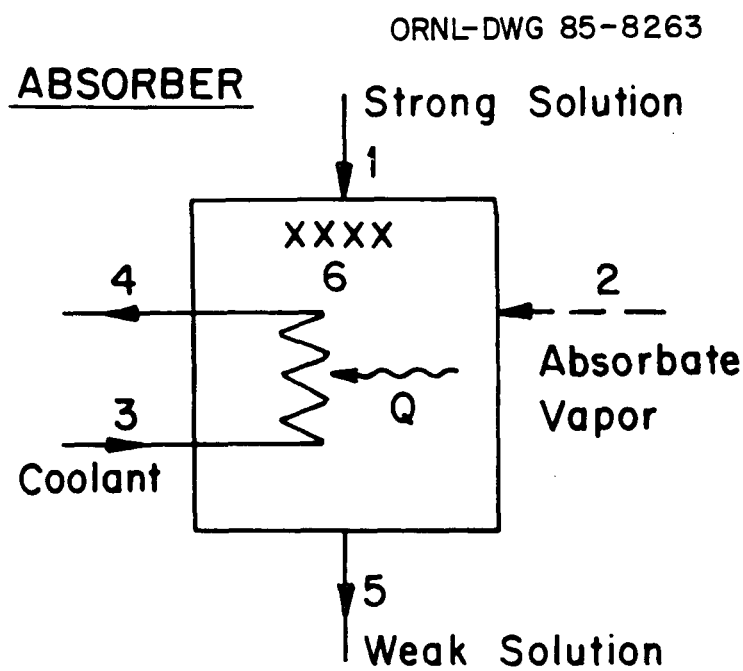

Fig. 2.5 Symbolic sketch of absorber; state points are numbered as inside the corresponding unit subroutine.

The working pair is represented by an index, e.g., 1 for lithium bromide-water and 2 for water-ammonia. The user also has to specify the total number of units, the total number of state points, the upper limit on the number of iterations and the required convergence criterion for the solution (Sect. 2.4). Sample inputs are given in the Appendix.

2.3 UNIT SUBROUTINES

Each of the system's standard units (Figs. 2.5-2.11) is modeled in a subroutine. The unit is treated as a black box with its own inputs and outputs which can be connected to other

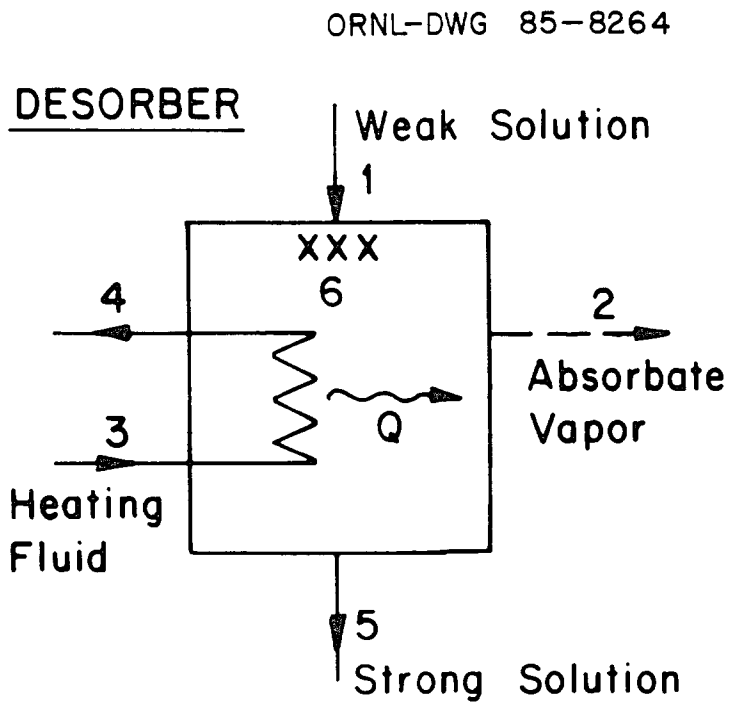

Fig. 2.6 Symbolic sketch of desorber; state points are numbered as inside the corresponding unit subroutine.

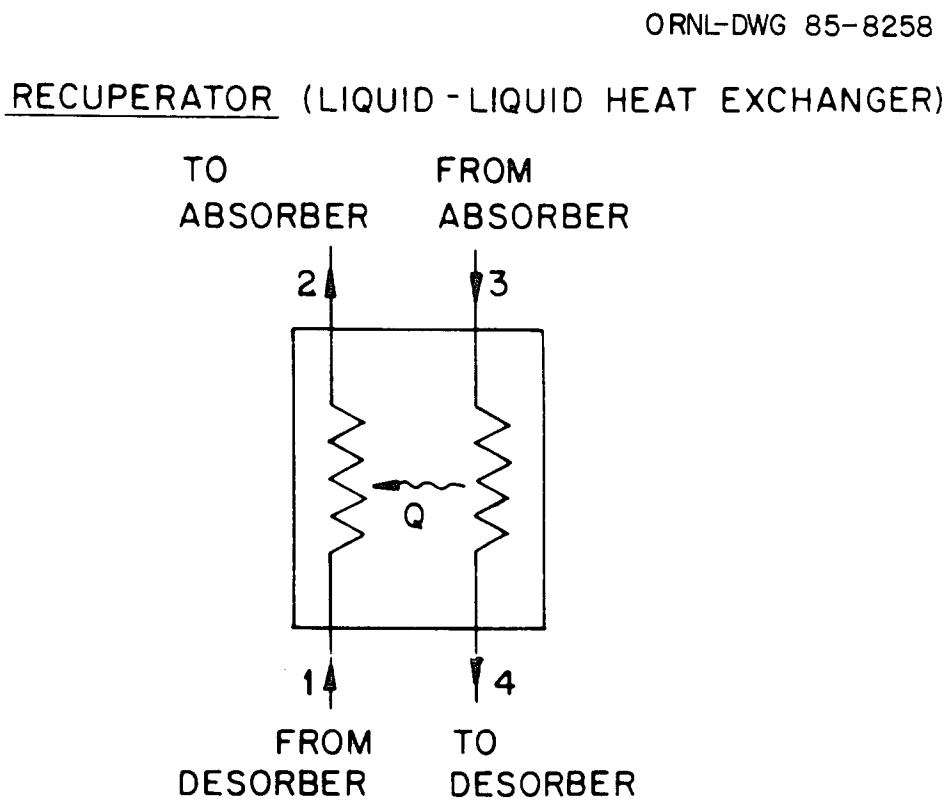

Fig. 2.7 Symbolic sketch of recuperator; state points are numbered as inside the corresponding unit subroutine.

ORNL-DWG 85-8259

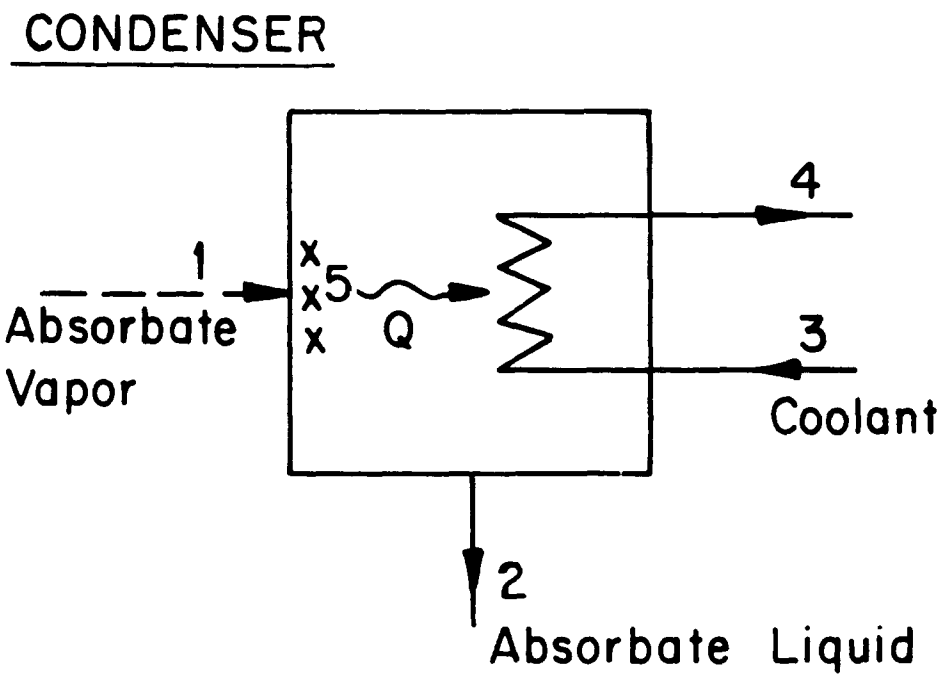

Fig. 2.8 Symbolic sketch of condenser; state points are numbered as inside the corresponding unit subroutine.

ORNL-DWG 85-8260

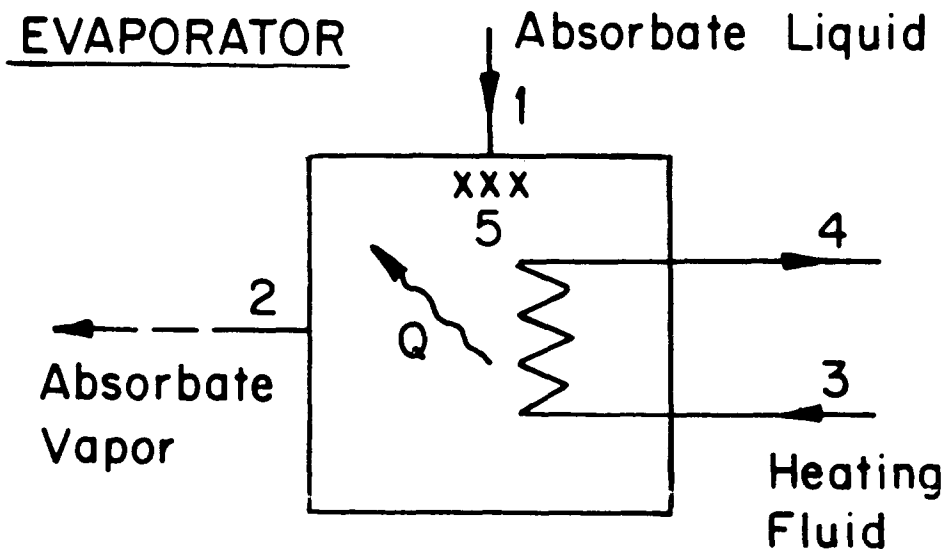

Fig. 2.9 Symbolic sketch of evaporator; state points are numbered as inside the corresponding unit subroutine.

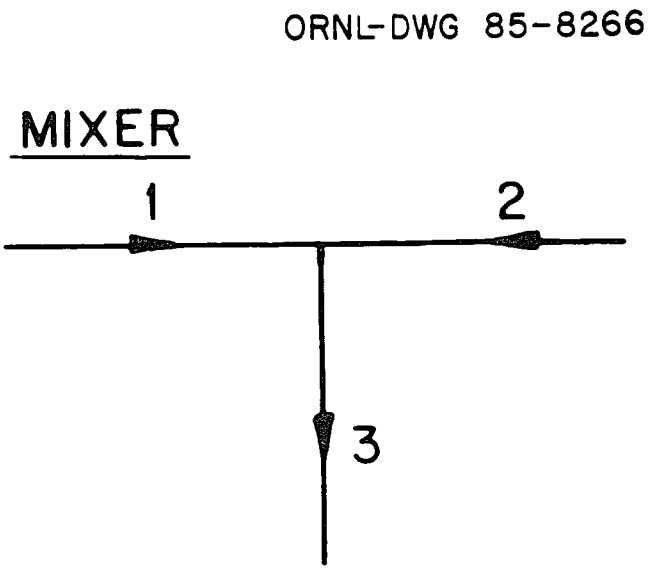

Fig. 2.10 Symbolic sketch of mixer; state points are numbered as inside the corresponding unit subroutine.

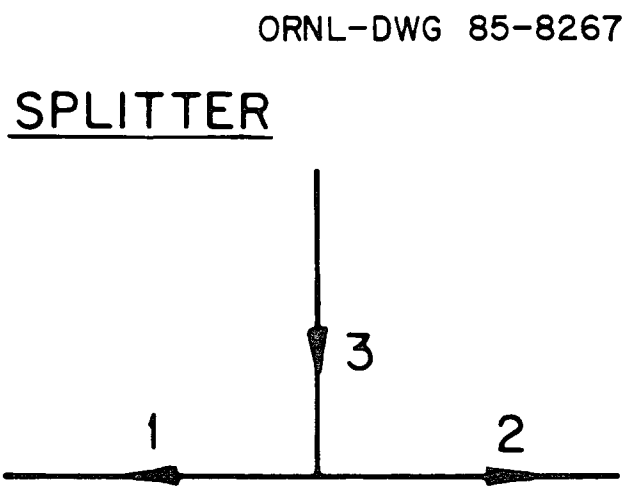

Fig. 2.11 Symbolic sketch of splitter; state points are numbered as inside the corresponding unit subroutine.

components. The governing equations take the unit as a whole and are formed from some or all of the following:

- energy balance
- conservation of total mass
- conservation of absorbent/absorbate
- heat transfer
- thermodynamic equilibrium between liquid and vapor

These equations, which form the set (Eqs. 2.1-2.28), are as follows (symbols are explained in the nomenclature list).

Absorber (Fig. 2.5)

Energy balance

$$Q_a = \dot{m}_1 h_1 + \dot{m}_2 h_2 - \dot{m}_5 h_5 = \dot{m}_3 (h_4 - h_3) . \tag{2.1}$$

Note that $\dot{m}_4 = \dot{m}_3$.

Conservation of total mass

$$\dot{m}_1 + \dot{m}_2 = \dot{m}_5 . \tag{2.2}$$

Conservation of absorbate mass

$$\dot{m}_1 C_1 + \dot{m}_2 C_2 = \dot{m}_5 C_5 . \tag{2.3}$$

Heat transfer

$$Q_A = (UA)_A \frac{(T_6 - T_4) - (T_5 - T_3)}{\ln[(T_6 - T_4)/(T_5 - T_3)]} \tag{2.4}$$

Equilibrium equations

The liquid at state point 5 is in equilibrium at the pressure of the vapor at state point 2:

$$f(P_2, C_5, T_5) = 0 . \tag{2.5}$$

Adiabatic absorption of the vapor at 2 by the liquid at 1 leads to equilibrium at 6:

$$f(T_1, P_2, C_1, C_5, T_6) = 0 . \tag{2.6}$$

Desorber (Fig. 2.6)

Energy balance

$$Q_D = \dot{m}_2 h_2 + \dot{m}_5 h_5 - \dot{m}_1 h_1 = \dot{m}_3 (h_3 - h_4) \ . \tag{2.7}$$

Conservation of total mass

$$\dot{m}_2 + \dot{m}_5 = \dot{m}_1 \ . \tag{2.8}$$

Conservation of absorbate mass

$$\dot{m}_2 C_2 + \dot{m}_5 C_5 = \dot{m}_1 C_1 \ . \tag{2.9}$$

Heat transfer

$$Q_D = (UA)_D \frac{(T_4 - T_6) - (T_3 - T_5)}{\ln[(T_4 - T_6)/(T_3 - T_5)]} \tag{2.10}$$

Equilibrium equations

The vapor at state point 2 is in equilibrium with the liquid at state point 5.

$$f(P_2, C_5, T_5) = 0 \ . \tag{2.11}$$

Adiabatic desorption of vapor at 2 by the liquid at 1 leads to equilibrium at 6:

$$f(T_1, P_2, C_1, C_5, T_6) = 0 \ . \tag{2.12}$$

Recuperator (Fig. 2.7)

Energy balance

$$Q_R = \dot{m}_2(h_2 - h_1) = \dot{m}_3(h_3 - h_4) \ . \tag{2.13}$$

Note that $\dot{m}_1 = \dot{m}_2$ and $\dot{m}_3 = \dot{m}_4$.

Heat transfer

$$Q_R = (UA)_R \frac{(T_3 - T_2) - (T_4 - T_1)}{\ln[(T_3 - T_2)/(T_4 - T_1)]} \tag{2.14}$$

Condenser (Fig. 2.8)

Energy balance

$$Q_C = \dot{m}_1(h_1 - h_2) = \dot{m}_3(h_4 - h_3) \ . \tag{2.15}$$

Heat transfer

$$Q_C = (UA)_C \frac{(T_2 - T_3) - (T_5 - T_4)}{\ln[(T_2 - T_3)/(T_5 - T_4)]} \tag{2.16}$$

Equilibrium equations

For the vapor at 5, which is in an equilibrium state,

$$f(P_5, C_5, T_5) = 0 \ . \tag{2.17}$$

If the vapor at 1 is ready to condense without further cooling (i.e., if it is not superheated), $T_1 = T_5$. This is the case for the volatile absorbent. If it is superheated, as for the nonvolatile absorbent, $T_1 \neq T_5$. For the nonvolatile absorbent, which condenses at a constant temperature, $T_5 = T_2$. In this case, Eqs. 2.17 and 2.18 are identical.

For the liquid at 2 in an equilibrium state with vapor at the same temperature and pressure,

$$f(P_2,C_2,T_2) = 0 \ . \tag{2.18}$$

The two pressures P_2 and P_5 are of course equal, as are the two concentrations, there being no other route for the material. When the absorbent is nonvolatile (e.g.. Li Br solution as the absorbent with water as the absorbate), the concentration is always 100%, and the relationships of Eqs. 2.17 and 2.18 reduce to

$$f(P,T) = 0 \ . \tag{2.19}$$

Evaporator (Fig. 2.9)

Energy balance

$$Q_E = \dot{m}_1(h_2 - h_1) = \dot{m}_3(h_3 - h_4) \ . \tag{2.20}$$

Heat transfer

$$Q_E = (UA)_E \frac{(T_3 - T_2) - (T_4 - T_5)}{\ln[(T_3 - T_2)/(T_4 - T_5)]} \tag{2.21}$$

Equilibrium equations

For the vapor at 2, which is in an equilibrium state,

$$f(P_2,C_2,T_2) = 0 \ . \tag{2.22}$$

If the liquid at 1 is subcooled (i.e., it requires further heating before it can evaporate), $T_1 \neq T_5$. For a pure absorbate that evaporates at a constant temperature, $T_5 = T_2$. For the liquid at 5, in equilibrium at the same pressure,

$$f(P_5,C_5,T_5) = 0 \ . \tag{2.23}$$

Note that $P_5 = P_2$, but $T_1 \neq T_2$. Also $C_1 = C_2$, as there is no other route for the material. For a nonvolatile absorbent (see "Condenser" above), the relationships reduce to:

$$f(P,T) = 0 \ . \tag{2.19}$$

Mixer (Fig. 2.10)

Energy balance

$$\dot{m}_1 h_1 + \dot{m}_2 h_2 = \dot{m}_3 h_3 \ . \tag{2.24}$$

Conservation of total mass

$$\dot{m}_1 + \dot{m}_2 = \dot{m}_3 \ . \tag{2.25}$$

This equation is obviously not used if the three flow rates are fixed (i.e., given).

Conservation of absorbate mass

$$\dot{m}_1 C_1 + \dot{m}_2 C_2 = \dot{m}_3 C_3 \ . \tag{2.26}$$

This equation is not used if the concentrations are all fixed and equal (as they are for the water at state points 3, 30, and 31 in Fig. 2.2).

Splitter (Fig. 2.11)

For the case of the splitter, it is obvious that the concentrations and the temperatures at all three points are equal. Thus the only significant equation remaining is that for the conservation of total mass.

$$\dot{m}_3 = \dot{m}_1 + \dot{m}_2 \ . \tag{2.27}$$

If these flow rates are constant, then this relation is trivial and the splitter can be omitted (e.g., junction of points 6, 16, and 26 for the double-stage heat transformer, Fig. 2.2 and Table A.3).

2.4 SOLUTION METHOD

Before starting the solution, the program uses the input to create a set of variables x_i. Given the state points and their parameters (Sect. 2.2), the program selects from the input those parameters that are variable. If the temperatures, for example, of two or more state points are equal and variable, only one of these is represented in the variable list x_i. The state points whose temperatures are equal to a particular x_i are recorded so that all the temperatures in the system can be recreated from the variable set x_i. The same applies to variable flow rates, concentrations, and pressures.

The system equations (Eqs. 2.1-2.27) are nonlinear in the variables, except those of conservation of total mass. Those yielded by the energy balance and liquid-vapor equilibrium depend on the material properties, and their degree of nonlinearity is unpredictable. Thus, the system of equations will have several, and possibly many, solutions. Of these, generally only one will be a physical solution; the method for identifying this one is described in Sect. 2.5.

From Eqs. 2.1 through 2.27, a set of nonlinear equations is formed, which must be solved simultaneously.

$$\begin{aligned} F_1(x_1,x_2,\ldots,x_n) &= \delta_1 \\ F_2(x_1,x_2,\ldots,x_n) &= \delta_2 \qquad \delta_i \rightarrow 0 \text{ at the solution} \\ &\vdots \\ F_n(x_1,x_2,\ldots,x_n) &= \delta_n \end{aligned} \tag{2.28}$$

Generally, any one F_i involves only a few of the x_i. The solution routine aims to reduce δ_i toward zero and is said to converge when either

$$\sqrt{\Sigma\delta_i^2} < \epsilon_1$$

or

$$\max_i \, |x_i^{K+1} - x_i^K| < \epsilon_2 \, .$$

The convergence criteria ϵ_1, ϵ_2 are of the order of 10^{-6}. The routine performs iterations to converge to a solution, and K is the iteration number.

The values δ_i $(i = 1,n)$ and the variables x_i $(i = 1,n)$ are fed to the solution routine. The program we have written converts the x_i, on exiting from an iteration, to the values of system temperatures, etc., so that the δ_i can be calculated for the next iteration.

The solution routine selected is called HYBRD1, a program specifically written for the simultaneous solution of a system of nonlinear algebraic equations. The method is a modification of M. Powell's hybrid procedures,[5] which are based on the classical Newton-Raphson technique. It has been found to be extremely robust.

2.5 CONSTRAINTS

By its nature, a system of simultaneous nonlinear equations has many solutions. A required solution can be obtained from an initial point which is close to it. However, a prerequisite for such an initial point is an estimate of the solution. In this application, the user is not expected to know anything in advance about the solution. Thus one of the main problems in developing the code was how to ensure the physical solution, regardless of the starting point. To do this, constraints were introduced into the program.

The equations governing the components are given in Sect. 2.3. The direction of heat transfer in each component is shown in Figs. 2.5–2.11. The heat must be transferred in the directions shown for the component to operate as intended. The physical solution requires that the temperatures permit this heat transfer. Thus, constraints on the temperatures are as follows:

Absorber

$$T_6 > T_4$$
$$T_5 > T_3$$
$$T_4 > T_3$$
$$(T_6 > T_5)$$

Desorber

$$T_4 > T_6$$
$$T_3 > T_5 \qquad (2.29)$$
$$T_3 > T_4$$
$$(T_5 > T_6)$$

Recuperator

$$T_3 > T_2$$
$$T_4 > T_1$$

Condenser

$$T_5 > T_4$$

$$T_2 > T_3$$

$$T_4 > T_3$$

Evaporator

$$T_4 > T_5$$

$$T_3 > T_2$$

$$T_3 > T_4$$

Referring to the recuperator, the heat flow is sometimes from the strong to the weak stream (e.g., chiller, Fig. 2.3) and sometimes from the weak to the strong stream (e.g., heat transformer, Fig. 2.1). Obviously, the formulation of the constraints must reflect this.

The satisfaction of these constraints ensures that the argument of the logarithm term in Eqs. 2.4, 2.10, 2.14, 2.16, and 2.21 is not negative. There are also problems when this argument is close to 1. For this case, the series approximation for the logarithm of a number is used to give

$$\ln\left(\frac{m}{n}\right) = 2\left(\frac{m-n}{m+n}\right) \qquad m \approx n$$

or

$$\frac{m-n}{\ln(m/n)} = \frac{m+n}{2} \tag{2.30}$$

A set of starting temperatures that satisfies the constraints (Eq. 2.29) is formed from the arbitrary (and all equal) initial values for the variable temperatures (see the Appendix). In addition, when at each iteration a new vector x_i, $i=1,n$ is selected by HYBRD1, the corresponding temperatures must also be checked to see if they satisfy the constraints.

The method that was used to enforce the constraints, referred to here as the "shift method," is very straightforward. Given the requirement that, for example, $T_6 > T_4 > T_3$ and $T_5 > T_3$ in a particular unit, then the temperature values, providing they are not fixed, are simply shifted by the program a small amount at a time until the constraints are satisfied. In the above case, T_6 and T_5 would be shifted upward, T_3 downward, and T_4 placed midway between T_6 and T_3. This shift is equivalent to obtaining a new starting point that is in the permissible, that is, physical, region. Since an iterative method of solution is used, the point at every iteration can be a starting point. Therefore,

this method is acceptable, and it has been found to be so. The amount, or step length, by which each shifting occurs is arbitrarily chosen: 4°F for the initial point and 0.1 or 0.01°F during the solution procedure were found to be suitable.

It may happen that the satisfaction of constraints from one component may oppose the constraints of another, if the shifting is done too crudely (i.e., if the step length is too large). Note, however, that if there exists a physical solution for the system as it is specified, all the constraints can be satisfied simultaneously. If this problem is encountered at the starting point, the step length may be reduced or different (also arbitrary) initial temperatures may be chosen.

If the variable temperatures were altered in enforcing the constraints during a HYBRD1 iteration, the vector x_i will be altered within the iteration. There is a theoretical possibility that the constraint enforcement may return the x-vector to exactly the same point chosen by HYBRD1 in a previous iteration, thus entering a loop of nonconvergence. However, the probability of this happening is small, and in the cases tried (see Sect. 3) there was no problem with convergence. In fact, considering its simplicity, this method of enforcing the constraints works remarkably well and allows convergence to the physical solution from completely arbitrary initial values. It was found necessary to impose the additional constraint that the pressures must be positive.

There is an alternative, more sophisticated, yet more complex way of expressing the constraints. Considering, for example, the two constraints, $T_2 > T_1$ and $T_3 > T_2$, where T_1 is a fixed temperature and T_2 and T_3 are variables. One can then write:

$$T_2 = T_1 + \alpha_2^2$$

$$T_3 = T_2 + \alpha_3^2$$

where α_2 and α_3 are new variables. Thus the variables T_2 and T_3 have been replaced by α_2 and α_3. The main problem is to reduce the number of constraints to ensure that the new variables are no more numerous than the old ones. This method was found to work as it was tested on the single-stage NH_3/H_2O heat transformer, and it gave the same solution as did the shift method for enforcing the constraints. The initial point was made to satisfy the full (i.e., not reduced) set of constraints, and this was done by the shift method.

The main limitation, though, as it stands at present, is the need to reduce the number of constraints. It may be that on eliminating a constraint, the argument of a logarithm term is allowed to become negative. If the logarithm evaluation is bypassed, the calculations can proceed, and the correct solution can be reached providing the remaining constraints are sufficient to define the physical solution.

3. RESULTS

The simulation code was tested on three systems: a single-stage heat transformer, a double-stage heat transformer, and a single-stage chiller. The working fluid pair was lithium bromide-water, a nonvolatile absorbent. The system's capability was extended to working pairs with a volatile absorbent, and a single-stage heat pump with water/ammonia was simulated. The coolant and heating fluid were taken to be pure water in all cases.

3.1 NONVOLATILE ABSORBENT

The thermodynamic properties of the lithium bromide-water solution[6] are available in mathematical formulas, allowing for fast evaluation. The absorbate is pure water, the saturated vapor of which has a unique relationship between pressure and temperature. Examples of solutions for the three systems are shown in Figs. 3.1 through 3.3, where the steady state temperatures have been indicated (in parentheses) for each state point (see Figs. 2.1-2.3). The corresponding flow rates, concentrations, and pressures can be found in the Appendix. The solution for the single-stage heat transformer (Fig. 3.1, Table A.1) is very close to a measured case (Table A.9). Note that although the solution depends on the fixed parameters (temperatures, flow rates, etc.) it does not depend at all on the initial values of the variable parameters (Sect. 2.5). All the initial variable temperatures were taken to be equal, at some arbitrary value. The initial variable flows, concentrations, etc., were likewise taken to be equal and arbitrary. Table 3.1 shows the initial values of temperature used in various cases, all of which led to the same solution. This shows the success of the method of applying the constraints (Sect. 2.5).

In the validation (see Table 3.3 in Sect. 3.3), the single-stage system converged for various heat source temperatures ($T_1 = T_3 = T_{10}$, in Fig. 2.1) from 140 to 184°F. The sensitivity of the double-stage system was tested by varying the heat source temperatures ($T_1 = T_{20} = T_{31}$, in Fig. 2.2) from 100 to 250°F, in steps of 10°F, and convergence was reached, to different solutions of course, in every case.

3.2 VOLATILE ABSORBENT

The properties of a water-ammonia mixture as given in ref. 7 consist of the temperatures and enthalpies of liquid and vapor in mutual equilibrium for different pressures and compositions. These data come in tabular form, requiring interpolation and more computer time than for the case of the Li Br-water mixture. Linear interpolation was considered to be satisfactory. The tables are used as follows: For a liquid, any two of the three parameters, fluid composition (concentration), temperature, and pressure, can be input to obtain the third, plus the enthalpy of the fluid. For a vapor, only vapor temperature and

ORNL-DWG 85-8269

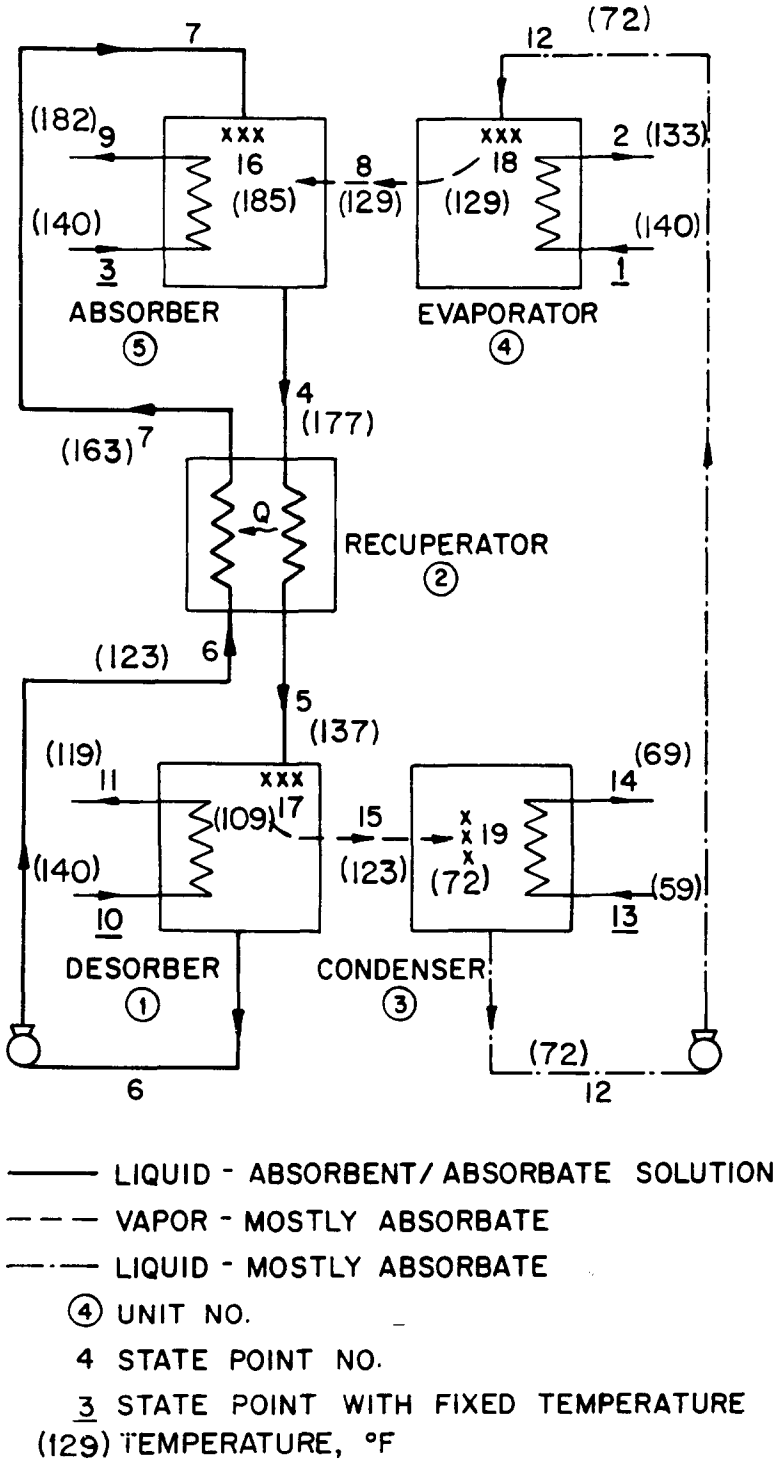

——— LIQUID - ABSORBENT/ ABSORBATE SOLUTION

– – – VAPOR - MOSTLY ABSORBATE

—·— LIQUID - MOSTLY ABSORBATE

④ UNIT NO.

4 STATE POINT NO.

3 STATE POINT WITH FIXED TEMPERATURE

(129) TEMPERATURE, °F

Fig. 3.1 Results for the single-stage heat transformer, Li Br–water.

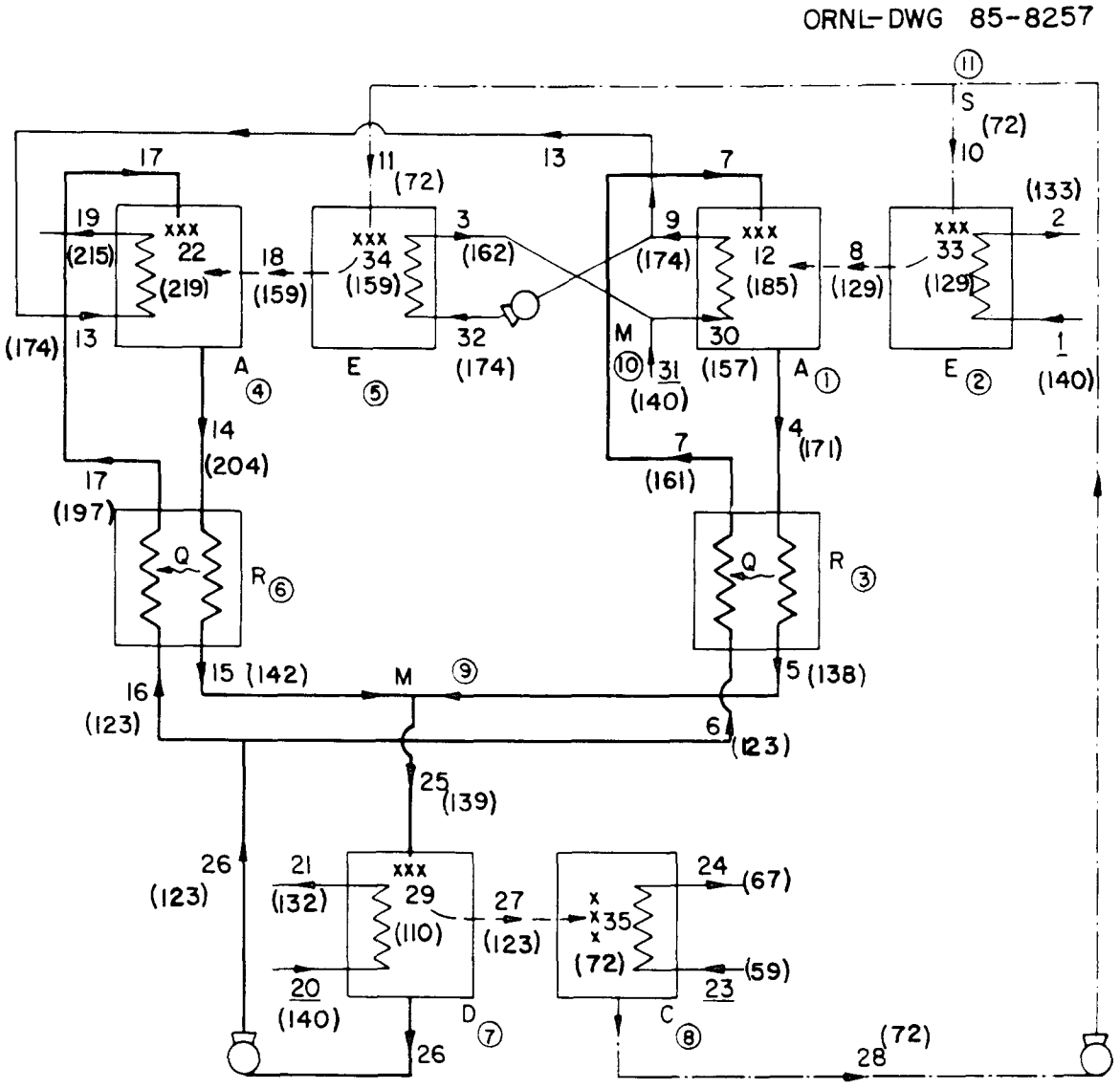

Fig. 3.2 Results for the double-stage heat transformer, Li Br–water.

pressure can be input, yielding concentration and enthalpy. This is because the concentration of the vapor varies extremely little for very wide ranges of pressure and temperature. In fact, the vapor concentration saturates at over 98% of ammonia for more than half the pressures and temperatures in the table. Hence, vapor concentration as an input would give extremely inaccurate results.

An example solution of the water-ammonia system is shown in Fig. 3.4. Note that the fixed temperatures T_1 and T_{10} are 160°F, whereas for the Li Br–water system, these were 140°F. When T_1 and T_{10} were at first set to 140°F for the volatile absorbent, no solution could be found. This is because the desorber cannot desorb out sufficient ammonia at the lower temperatures.

ORNL-DWG 85-8256

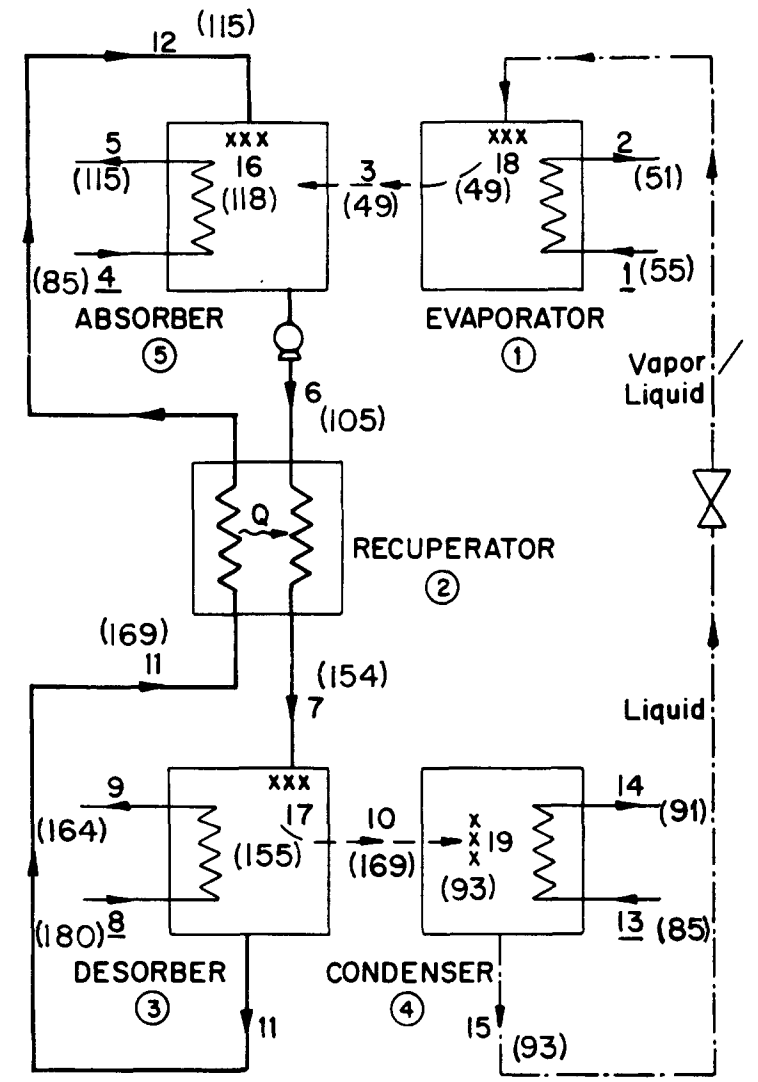

——— LIQUID - ABSORBENT/ABSORBATE SOLUTION

– – – VAPOUR - MOSTLY ABSORBATE

—·— LIQUID - MOSTLY ABSORBATE

④ UNIT NO.

5 STATE POINT NO.

4 STATE POINT WITH FIXED TEMPERATURE

(93) TEMPERATURE, °F

Fig. 3.3 Results for the single-stage chiller, Li Br–water.

Table 3.1. Different sets of initial temperatures tested for the various systems

System	Initial values of variable temperatures (°F)	Solution
Single-stage heat transformer, Li Br-H_2O	All 120	Fig. 3.1
Single-stage heat transformer, H_2O-NH_3	All 120	Fig. 3.4
Double-stage heat transformer, Li Br-H_2O	All 80	Fig. 3.2
	All 90	Fig. 3.2
	All 100	Fig. 3.2
	All 120	Fig. 3.2
Single-stage chiller, Li Br-H_2O	All 60	Fig. 3.3

3.3 VALIDATION

Experimental data for validation of the program were selected from measurements on a lithium bromide-water absortion heat pump for upgrading waste heat, developed and tested at the Oak Ridge National Laboratory.[8,9] Seventy-three experimental runs were documented[9] where the machine had operated under steady state, stable conditions for between 1 and 8 h.

3.3.1 Selection of Experimental Runs for the Validation

Out of the 73 runs documented, it was necessary to select those that were most suitable for detailed comparison with the simulation. Nineteen runs were identified in which the evaporator tubes were not properly wetted due to an insufficient amount of absorbate liquid. In another eight cases, *UA* values could not be reliably determined for the evaporator, absorber, desorber, or condenser. The recuperator had presented some difficulties with low solution flowrates. There were 14 additional cases where the recuperator *UA* value was either unreliable or very small or where the heat transfer as measured on either side of the recuperator differed by between 50 and 400% instead of being equal. These considerations eliminated 41 of the 73 runs.

Next it was noticed that the measured *UA* value for a single component, which should be a constant, varied by up to 300% from one run to the other. The *UA* value is a calculated parameter, based on heat flows and temperature differences in the component. By its form (e.g., Eqs. 2.4 and 2.10) the *UA* value is very sensitive to errors in temperature measurement if the temperature differences are small. On inverting the heat transfer equation (e.g., Eq. 2.14 for the recuperator), we obtain the formula for *UA*:

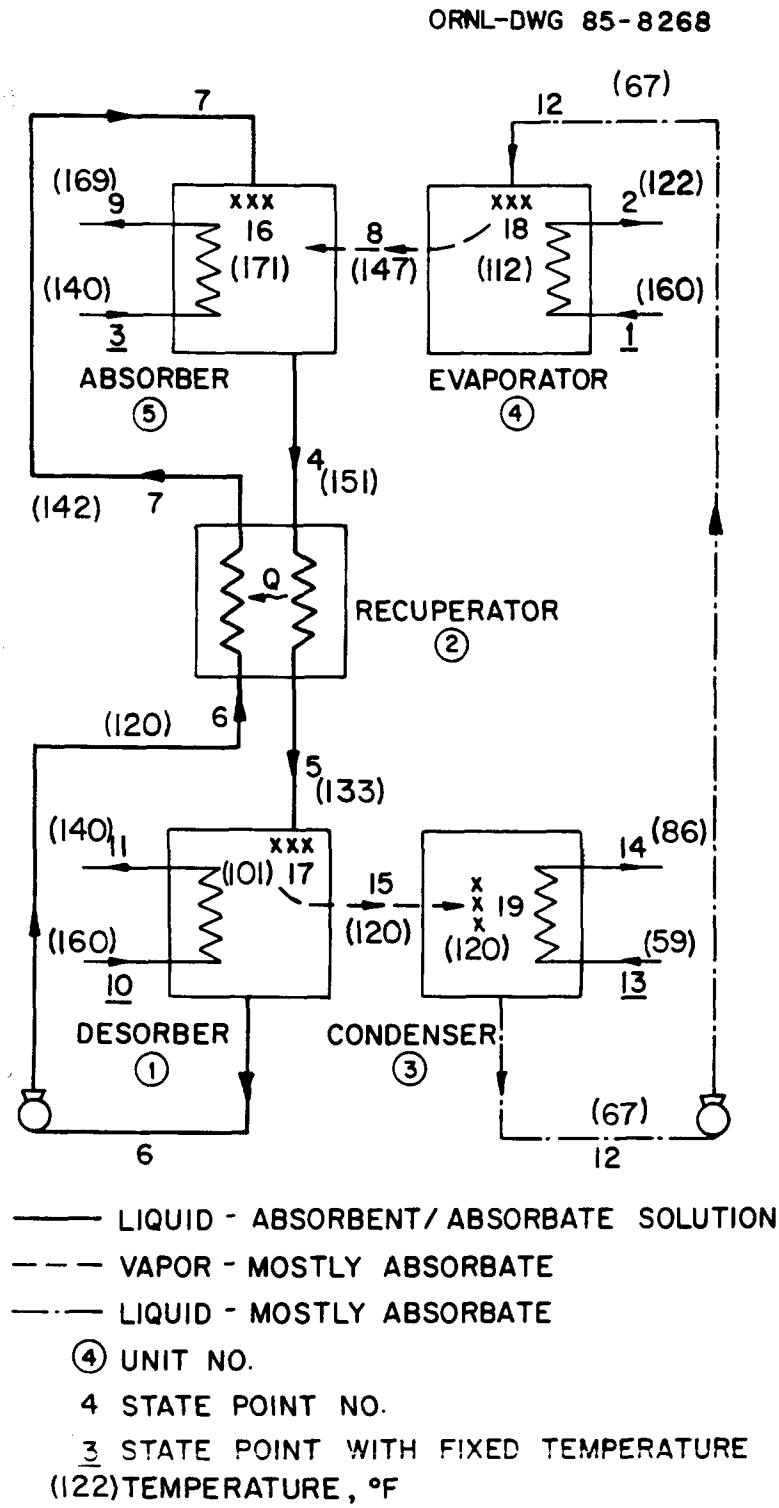

Fig. 3.4 Results for the single-stage heat transformer, water–NH_3.

$$UA = Q \cdot \frac{\ln[(T_3 - T_2)/(T_4 - T_1)]}{(T_3 - T_2) - (T_4 - T_1)} \quad . \tag{3.1}$$

The error in Q itself, judging by measurements in reliable experimental runs of Q on both sides of the absorber, can be considerable. Every temperature T was measured to an accuracy of 0.1°F. This means that the relative error (δQ) on Q was 0.2 and the absolute error ($T\delta T$) on T was 0.1°F.

An error analysis can now be performed on Eq. 3.1 to obtain the upper limit on the error in UA. Both $(T_3 - T_2)$ and $(T_4 - T_1)$ are taken as positive, and the computer round-off error is neglected.

If we denote an absolute error on x by Δx and its relative error by δx so that $\Delta x/x = \delta x$, then

$$\Delta(\ln x) = \frac{\Delta x}{x} = \delta x \quad .$$

Thus, the absolute error in the logarithm is the relative error in the argument.

$$\frac{\Delta(\ln x)}{\ln x} = \frac{\delta x}{\ln x} \quad . \tag{3.2}$$

Maximum relative error on $(T_3 - T_2)$ equals

$$\frac{\delta T(T_2 + T_3)}{(T_3 - T_2)} \quad . \tag{3.3}$$

Maximum relative error on $(T_4 - T_1)$ equals

$$\frac{\delta T(T_1 + T_4)}{(T_4 - T_1)} \quad . \tag{3.4}$$

Maximum relative error on $(T_3 - T_2)/(T_4 - T_1)$ equals

$$\delta T\left[\left(\frac{T_2 + T_3}{T_3 - T_2}\right) + \left(\frac{T_1 + T_4}{T_4 - T_1}\right)\right] \tag{3.5}$$

Placing $x = (T_3 - T_2)/(T_4 - T_1)$ into Eq. 3.2 and using Eq. 3.5, we find that the maximum relative error on $\ln[(T_3 - T_2)/(T_4 - T_1)]$ equals

$$\frac{\delta T}{|\ln(T_3 - T_2)/(T_4 - T_1)|}\left[\frac{T_2 + T_3}{T_3 - T_2} + \frac{T_1 + T_4}{T_4 - T_1}\right]. \tag{3.6}$$

The maximum relative error on $[(T_3 - T_2) - (T_4 - T_1)]$ equals

$$\frac{\delta T(T_1 + T_2 + T_3 + T_4)}{|(T_3 - T_2) - (T_4 - T_1)|}. \tag{3.7}$$

Combining Eqs. 3.6 and 3.7 into Eq. 3.1, we obtain the maximum relative error on UA:

$$\begin{aligned}\delta(UA) = \delta Q &+ \frac{\delta T}{|\ln(T_3 - T_2)/(T_4 - T_1)|}\left[\frac{T_2 + T_3}{T_3 - T_2} + \frac{T_1 + T_4}{T_4 - T_1}\right] \\ &+ \frac{\delta T(T_1 + T_2 + T_3 + T_4)}{|(T_3 - T_2) - (T_4 - T_1)|}.\end{aligned} \tag{3.8}$$

This error obviously increases rapidly with decreasing temperature differences. Equation 3.8 is symmetrical in $(T_3 - T_2)$ and $(T_4 - T_1)$.

To compose a numerical value for $\delta(UA)$, let us take for example $(T_4 - T_1) = 10°F$ and $(T_3 - T_2) = 1°F$, with $T_1 = T_2 = T_3 = T_4 = T$:

$$\begin{aligned}\delta(UA) &= \delta Q + \frac{\delta T}{\ln(10)}\left[\frac{2T}{10} + 2T\right] + \delta T\left[\frac{4T}{9}\right] \\ &= \delta Q + T\delta T\left[\frac{2.2}{2.3} + 0.44\right] \\ &= \delta Q + T\delta T \cdot 1.4 .\end{aligned}$$

If $\delta Q = 0.2$ and $T\delta T = 0.1$, then $\delta(UA) = 0.34$ or 34%.

Thus, the error in UA is dominated by the error in Q but is noticeably increased by the errors in T, which are responsible for 14% of the error. If $(T_4 - T_1)$ remains at 10°F and $(T_3 - T_2)$ decreases to 0.5°F, then the contribution to $\delta(UA)$ from the errors in the

temperatures is now 18%. For the case when $T_4 - T_1$ is close to $T_3 - T_2$, the logarithm formulation must be replaced by the approximation in Eq. 2.30 to avoid unnecessary errors. We can conclude that any differences in the *UA* values obtained for a component during different experimental runs that cannot be attributed, as above, to the error in measurement of Q or T must be due to changing operating conditions.

As a result of the fact that the error in the calculated *UA* value increases as the smaller of the two temperature differences involved decreases, those experimental runs that had larger temperature differences were selected for validation. However, to accumulate at least ten example runs, we lowered the minimum allowable temperature difference to 1.1°F. All temperature differences in the desorber were high, that is, over 10°F. The measured heat transfer, Q_A, Q_R, Q_D, should be the same on either side of the absorber, recuperator, or desorber. That is, Q_{A1}/Q_{A2}, Q_{R1}/Q_{R2}, and Q_{D1}/Q_{D2}, should be equal to one. These ratios and the smaller of the temperature differences for the selected runs are shown in Table 3.2, giving some idea of the quality of the respective *UA* values. The ratios Q_{D1}/Q_{D2}, referring to the desorber, are within 4% of 1.0.

3.3.2 Comparison of Experimental and Computed Results

The comparison of the selected experimental runs (numbers shown in Table 3.2) with the simulation is shown in detail in Tables A.5-A.14. Input data for the simulation are on the first page of each table and are explained in the Appendix. Data that vary from one run to the next constitute the *UA* value for each component and the fixed temperatures and flow rates in the system. The computed and measured variable temperatures, flow rates, concentrations, and pressures are compared on the second page of each table. The comparison is summarized in Tables 3.3 and 3.4. Table 3.3 shows the maximum and root

Table 3.2. Values of selection criteria for the experimental runs used in validation[a]

Run number[b]	Evaporator $T_2 - T_{18}$	Absorber		Condenser $T_{19} - T_{14}$	Recuperator Q_{X1}/Q_{X2}
		$T_{16} - T_9$	Q_{A1}/Q_{A2}		
114	2.0	1.7	1.1	3.2	1.0
137	1.9	5.0	1.1	1.7	1.2
145	1.1	4.0	1.1	3.3	1.1
149	2.7	5.9	1.2	4.4	1.3
153	1.7	2.8	1.1	3.4	1.1
156	2.1	6.6	1.2	4.9	1.3
158	2.4	5.6	1.2	4.2	1.3
161	2.5	2.3	1.1	3.0	1.1
162	3.6	2.6	1.1	3.2	1.1
167	4.8	2.0	1.1	2.4	1.2

[a]All temperature differences in the desorber were over 10°F.
[b]Run numbers refer to the documentation (ref. 9).

Table 3.3. Summary of differences between calculated and measured values of concentration (C_c, C_m) and temperature (T_c, T_m) and COP

Run number	Input water temp. (°F)	COP		Max. $\lvert C_c - C_m \rvert$ (% of Li Br)	Max. $\lvert T_c - T_m \rvert$ (°F)	RMS[a] ($T_c - T_m$) (°F)
		Calculated	Measured			
114	140	0.49	0.44	1.0	6	3.2
137	150	0.48	0.43	1.4	5	2.9
145	140	0.49	0.45	1.6	5	2.8
149	184	0.49	0.42	1.5	10	5.6
153	141	0.49	0.44	1.7	5	2.8
156	180	0.48	0.41	2.2	13	6.6
158	181	0.49	0.42	1.8	13	6.0
161	144	0.49	0.44	1.5	5	2.9
162	142	0.49	0.46	1.3	6	2.6
167	144	0.48	0.44	2.0	8	3.8

[a]RMS (root mean square) = $[\Sigma\ (T_c - T_m)^2/N]^{1/2}$.

Table 3.4. Differences between computed (T_c) and measured (T_m) temperatures (°F)

State point number	Experimental run number									
	114	137	145	149	153	156	158	161	162	167
2	0.3	0	0.1	1.6	0	0.6	0.7	0.2	0	0.9
4	3.6	2.8	0.3	7.4	2.3	10.3	0.5	1.9	1.5	−0.6
5	−4.3	−2.8	−4.0	−5.0	−3.7	−3.4	−5.0	−4.0	−3.1	−8.4
6	−0.8	3.3	1.1	3.1	0.7	2.7	2.5	−0.1	−0.1	−4.7
7	6.4	4.7	4.0	10.5	4.7	12.9	12.8	4.6	3.6	1.0
8	0.4	0.1	0.2	2.2	0	0.8	0.8	0.2	0	1.4
9	4.0	4.3	4.1	7.5	5.1	10.4	10.5	5.1	4.2	1.0
11	−0.4	−0.5	−0.5	−0.8	−0.4	−0.9	−1.0	−0.5	−0.6	0.3
12	−2.5	−1.2	−1.6	−1.6	−2.0	−2.3	−3.5	−2.0	−2.3	−1.3
14	−0.4	−0.6	−0.3	−1.1	−0.4	−1.6	−1.5	−0.4	−0.1	−1.2
15	−0.8	2.7	1.2	3.1	0.7	2.7	2.5	−0.1	−0.1	−4.7
16	6.2	4.9	5.3	9.5	4.9	11.5	10.7	5.5	5.7	0.3
17	−1.0	−3.4	−4.1	−6.6	−2.1	−4.8	−4.8	−2.2	−2.4	8.3
Root mean square	3.2	2.9	2.8	5.6	2.8	6.6	6.0	2.9	2.6	3.8

mean square of differences in temperatures, the maximum difference between calculated and measured concentrations, and the difference between calculated and measured coefficients of performance (COPs). The COP is defined as follows (see Fig. 2.1).

$$\begin{aligned} \text{COP} &= \frac{\text{heat output from absorber}}{\text{heat input to evaporator and desorber}} \\ &= \frac{\dot{m}_3(T_9 - T_3)}{\dot{m}_1(T_1 - T_2) + \dot{m}_{10}(T_{10} - T_{11})} \\ &= Q_A/(Q_E + Q_D) \ . \end{aligned} \tag{3.9}$$

The discrepancies in temperature and COP are highest in the high-temperature runs (runs 149, 156, and 158). The calculated COPs are greater than the measured ones by 16% for these high-temperature runs and 7 to 12% for the rest.

The discrepancies in temperature between the simulation and the experiment, for the individual state points, are summarized in Table 3.4. State points 18 and 19 have been omitted because their temperatures are equal to those of points 8 and 12, respectively. Run 167 could be excluded from a generalization because the *UA* value for the condenser had to be reconstructed as the result of one temperature measurement being unreliable. The large temperature differences of around 10°F occur only in the high-temperature runs 149, 156, and 158, and for the state points 7, 9, and 16, whose temperatures are well over 200°F (Tables A.5–A.14). The calculated temperatures are consistently higher than the measured ones for state points 4, 7, 9, and 16 (in the absorber) and consistently lower for state points 5, 11, 12, and 17 (in the desorber) and 14 (in the condenser). These differences are summarized by the COPs. The theoretical system is obviously more efficient than the real one. Some of the discrepancy in COPs could be attributed to errors in flow and temperature measurement if these errors occur in one direction, that is, if they are not random. To calculate the relative error on the COP, we can proceed as follows, given that the accuracy in flow rate measurement is ±1% of the reading [i.e., relative error $\delta(\dot{m}) = 0.01$] and accuracy in temperature measurement is 0.1°F (i.e., absolute error $T\delta T = 0.1$). From Eq. 3.9, maximum relative error on $(T_1 - T_2)$ equals

$$\delta T \frac{(T_1 + T_2)}{(T_1 - T_2)} \ .$$

Maximum relative error on $Q_E = \dot{m}_1(T_1 - T_2)$ equals

$$\delta(\dot{m}) + \delta T \frac{(T_1 + T_2)}{(T_1 - T_2)} \ . \tag{3.10}$$

Maximum absolute error on Q_E equals

$$Q_E\left[\delta(\dot{m}) + \delta T\frac{(T_1 + T_2)}{(T_1 - T_2)}\right] .$$

Maximum absolute error on $Q_D = \dot{m}_{10}(T_{10} - T_{11})$ equals

$$Q_D\left[\delta(\dot{m}) + \delta T\frac{(T_{10} + T_{11})}{(T_{10} - T_{11})}\right] .$$

Now temperatures $T_1 = T_{10}$ are fixed and because $T_1 - T_2 \leqslant T_{10} - T_{11}$, we can make an upper estimate for the absolute error on $Q_E + Q_D$ equal to

$$(Q_E + Q_D)\left[\delta(\dot{m}) + \delta T\frac{(T_1 + T_2)}{(T_1 - T_2)}\right]$$

and for the maximum relative error on $Q_E + Q_D$ equal to

$$\delta(\dot{m}) + \delta T\frac{(T_1 + T_2)}{(T_1 - T_2)} . \tag{3.11}$$

In the form of Eq. 3.10, we can write the maximum relative error on Q_A as

$$\delta(\dot{m}) + \delta T\frac{(T_3 + T_9)}{(T_9 - T_3)} . \tag{3.12}$$

Adding Eqs. 3.11 and 3.12, since the COP $= Q_A/(Q_E + Q_D)$, the maximum relative error on the COP is

$$\delta(\mathrm{COP}) = 2\delta(\dot{m}) + \delta T\frac{(T_3 + T_9)}{(T_9 - T_3)} + \delta T\frac{(T_1 + T_2)}{(T_1 - T_2)} .$$

Typical values are $T_9 - T_3 = 50°F$ and $T_1 - T_2 = 10°F$. Because $T\delta T = 0.1$ for any temperature T and $\delta(\dot{m}) = 0.01$, we can write

$$\delta(\mathrm{COP}) = 0.02 + \frac{0.2}{50} + \frac{0.2}{10}$$

$$= 0.044 \text{ or } 4.4\% \ .$$

If the discrepancies between calculated and measured COPs were of a random nature, one might well attribute some 4% of these to errors in measurement of temperature and flow rate. The fact that the calculated COPs were always higher point to the possibility that heat losses are occurring in the experiment that have not been accounted for in the simulation. These heat losses account for some 7 to 12% of the heat input for heat source temperatures of 140 to 150°F, rising to 16% where the source temperature is 180 to 185°F.

4. CONCLUSION

A computer program for simulating absorption systems has been written in a flexible and modular form, with a capability of modeling various systems and working fluids. The mathematical task involves solving a large set of simultaneous nonlinear equations generated by the heat and mass balance and transfer equations and by the material properties. A major problem was to reach the physical solution, one of the multitude of solutions, from any starting point.

This problem has been overcome by specifying the requirements for the physical solution as a set of constraints on the temperatures. The constraints were enforced by applying a method that essentially shifts the variable vector back into the physical region if it is found outside. This constraint technique as well as the equation-solving procedure HYBRD1, was found to be very robust.

The program has also been validated against experimental data. Allowing for the fact that heat losses of around 10% have not been accounted for in the simulation, there is close agreement between the theoretical predictions and the measurements.

REFERENCES

1. G. Grossman, J. L. Lando, I. Vardi, J. R. Bourne, Y. Kimchi, and J. Ben-Dror, "Solar Powered Environment Control Criteria and Realization," *Sun Two, International Solar Energy Society Jubilee Congress, Atlanta, Georgia, May 1979*, K. W. Boer and B. H. Glenn, eds., Vol. 1, pp. 720-724, Pergamon Press, 1979.

2. G. C. Vliet, M. B. Lawson, and R. A. Lithgow, "Water-Lithium Bromide Double Effect Absorption Cooling Cycle Analysis," paper HO-82-5/2, *ASHRAE Trans.* 88 (part 1) (1982).

3. G. Grossman and H. Perez-Blanco, "Conceptual Design and Performance Analysis of Absorption Heat Pumps for Waste Heat Utilization," paper 2691, *ASHRAE Trans.* 88 (part 1) (1982).

4. J. C. V. Chinnappa and H. A. Martin, "Dual Mode Operation by Solar Energy of an Ammonia-Water Two-Stage Cycle: A Comparative Study," *Sol. Energy* 18, 337-342 (1976).

5. P. Rabinowitz, ed., *Numerical Methods for Non-Linear Algebraic Equations*, Gordon and Breach, London, 1970.

6. American Society of Heating, Refrigerating, and Air-Conditioning Engineers, Equilibrium Charts for Aqueous Lithium Bromide Solutions, *ASHRAE Handbook of Fundamentals*, Figs. 49 and 50, pp. 16.81-16.82, 1977.

7. B. H. Jennings, "The Thermodynamic Properties of Ammonia-Water Mixtures: A Reassessment in Tabular Form," *ASHRAE Trans.* 87 (Part 2), 419-433 (1981).

8. W. R. Huntley, "Performance Test Results of an Absorption Heat Pump Using Low Temperature (60°C) Industrial Waste Heat," *Proceedings of the Eighteenth Intersociety Energy Conservation Engineering Conference, Orlanda, Florida, Aug. 21-26, 1983*, Vol. 4, pp. 1921-1926, American Institute of Chemical Engineers, 1983.

9. W. R. Huntley, *Performance Test Results of a Lithium Bromide-Water Absorption Heat Pump That Uses Low-Temperature [60°C (140°F)] Waste Heat*, ORNL/TM-9072, Oak Ridge National Laboratory, June 1984.

Appendix
RESULTS OF CALCULATIONS

A.1 RESULTS FOR SIMULATED SYSTEMS

Tables A.1 through A.4 give the detailed results for the systems simulated. The units of the parameters follow:

Temperature	°F
Enthalpy	$Btu \cdot lb^{-1}$
Flow rate	$lb \cdot min^{-1}$
Concentration	% of Li Br or % of NH_3
Pressure	psi
Heat transfer	$Btu \cdot min^{-1}$

The first page of each table is a printout of the input data. The working pair, which is represented by an index (1 for Li Br-water and 2 for water-ammonia) in the input data, is printed out in words in the tables (row 1). The tolerances on F and x are the convergence criteria ϵ_1, ϵ_2, respectively (row 2) (see Sect. 2.4 and Nomenclature). After the number of units (row 3) and number of state points (row 4) are the specifications for each unit. There are two rows for each unit: the first has the unit number, the unit identification number and the UA value; the second has the state points corresponding to the unit. The unit identification numbers are defined as follows:

1	Absorber
2	Desorber
3	Recuperator
4	Condenser
5	Evaporator
7	Mixer
8	Splitter

The unit numbers are simply sequential, i.e., they refer to the order in which the units are called (see Sect. 2.2).

The next block of data, labeled "STARTING POINTS," is the specification for each state point (Sect. 2.2). The columns provide the following information:

Column	Explanation
1	State point number
2	Integer to indicate material type 1 = solution 2 = vapor 3 = pure water (liquid)
3	Integer 0 = fixed temperature 1 = variable temperature, not equal to the temperature at any other state point ≥2 = variable temperature; state points for which this integer is the same have equal temperatures
4	Initial value of temperature
5	Integer 0 = fixed flow rate ≥1 = a variable flow rate; state points for which this integer is the same have equal flow rates
6	Initial value of flow rate
7	Integer 0 = fixed concentration ≥1 = a variable concentration; state points for which this integer is the same have equal concentrations
8	Initial value of concentration
9	Integer 0 = fixed pressure ≥1 = a variable pressure; state points for which this integer is the same have equal pressures
10	Initial value of pressure

Note that in accordance with the constraint method developed (Sect. 2.5), the initial values of the variable temperatures are all equal and arbitrary. The initial values of the other variables are also arbitrary, although of the correct order of magnitude. The next block of data consists of the new set of starting temperatures after the constraints (Sect. 2.5) have been applied. Then comes a summary of the total number of variables and of these, how many are variable temperatures, concentrations, flow rates, and pressures. The

rest of the output is **after** HYBRD1 has converged on a solution (Sect. 2.4). The last iteration number is printed, as is the flag "IER" representing the type of convergence:

IER	Explanation
1	$\sqrt{\Sigma\delta^2_i} < \epsilon_1$
2	$\max_i \lvert x_i^{K+1} - x_i^K \rvert < \epsilon_2$
3	Conditions for IER = 1 and IER = 2 hold

Next is printed a block containing the variables x_i and the functions δ_i at the last iteration. The next block of data contains in column format the temperatures, enthalpies, flow rates, concentrations, and pressures for each state point at the solution. Finally, the heat transfer for each unit is listed.

Table A.1. Single-stage heat transformer, Li Br–water

```
SINGLE STAGE HEAT TRANSFORMER - LI BR/WATER
TOLERANCES IN F, X          1.0D-05      1.0D-08
NO. OF UNITS        5
NO. OF STATE POINTS       19
 1    2   1.9280D+02
 5   15   10   11    6   17    0
 2    3   4.5100D+01
 6    7    4    5    0    0    0
 3    4   4.1220D+02
15   12   13   14   19    0    0
 4    5   3.6830D+02
12    8    1    2   18    0    0
 5    1   2.0640D+02
 7    3    3    9    4   16    0
STARTING POINTS
   1     3    0 140.0    0   402.10    0    0.0    0    0.0
   2     3    1 120.0    0   402.10    0    0.0    0    0.0
   3     3    0 140.0    0    59.30    0    0.0    0    0.0
   4     1    1 120.0    1    10.00    1   45.0    0    0.0
   5     1    1 120.0    1    10.00    1   45.0    0    0.0
   6     1    2 120.0    0    23.70    2   55.0    0    0.0
   7     1    1 120.0    0    23.70    2   55.0    0    0.0
   8     2    3 120.0    2    10.00    0    0.0    1    3.0
   9     3    1 120.0    0    59.30    0    0.0    0    0.0
  10     3    0 140.0    0   118.60    0    0.0    0    0.0
  11     3    1 120.0    0   118.60    0    0.0    0    0.0
  12     3    4 120.0    2    10.00    0    0.0    0    0.0
  13     3    0  59.0    0   256.20    0    0.0    0    0.0
  14     3    1 120.0    0   256.20    0    0.0    0    0.0
  15     2    2 120.0    2    10.00    0    0.0    2    1.0
  16     3    1 120.0    0     1.00    0    0.0    0    0.0
  17     3    1 120.0    0     1.00    0    0.0    0    0.0
  18     3    3 120.0    2    10.00    0    0.0    0    0.0
  19     2    4 120.0    2    10.00    0    0.0    2    1.0
```

Table A.1 (Continued)

```
STARTING TEMPERATURES AFTER CONSTRAINTS WERE APPLIED
  1      140.0    0
  2      120.0    1
  3      140.0    0
  4      145.0    1
  5      120.0    1
  6      110.0    2
  7      120.0    1
  8      110.0    3
  9      145.0    1
 10      140.0    0
 11      120.0    1
 12      130.0    4
 13       59.0    0
 14      120.0    1
 15      110.0    2
 16      150.0    1
 17      100.0    1
 18      110.0    3
 19      130.0    4
NO. OF VARIABLES          18
NO. OF TEMPERATURES       12
NO. OF CONCENTRATIONS      2
NO. OF FLOWS               2
NO. OF PRESSURES           2
```

Table A.1 (Continued)

LAST ITERATION NO. IS 68
IER = 2

1	1.3342D+02	-9.2371D-14
2	1.7096D+02	-5.6843D-14
3	1.3661D+02	-9.9476D-12
4	1.2271D+02	-4.4963D-11
5	1.6289D+02	2.7678D-08
6	1.2903D+02	-3.9615D-08
7	1.8224D+02	2.2737D-13
8	1.1892D+02	4.5475D-13
9	7.1892D+01	0.0000D+00
10	6.9312D+01	-3.5736D-05
11	1.8536D+02	-4.0623D-05
12	1.0949D+02	0.0000D+00
13	4.8005D+01	-2.1672D-13
14	5.2982D+01	1.9612D-09
15	2.6157D+01	-2.7668D-08
16	2.4571D+00	-1.2111D-07
17	2.1646D+00	-3.5527D-15
18	3.8692D-01	2.2204D-16

STATE POINT	TEMPERATURE	ENTHALPY	FLOW RATE	CONCENTRATION	PRESSURE
1	1.4000D+02	1.0800D+02	4.0210D+02	0.0000D+00	0.0000D+00
2	1.3342D+02	1.0142D+02	4.0210D+02	0.0000D+00	0.0000D+00
3	1.4000D+02	1.0800D+02	5.9300D+01	0.0000D+00	0.0000D+00
4	1.7096D+02	7.0420D+01	2.6157D+01	4.8005D+01	0.0000D+00
5	1.3661D+02	5.1935D+01	2.6157D+01	4.8005D+01	0.0000D+00
6	1.2271D+02	4.7195D+01	2.3700D+01	5.2982D+01	0.0000D+00
7	1.6289D+02	6.7596D+01	2.3700D+01	5.2982D+01	0.0000D+00
8	1.2903D+02	1.1170D+03	2.4571D+00	0.0000D+00	2.1646D+00
9	1.8224D+02	1.5024D+02	5.9300D+01	0.0000D+00	0.0000D+00
10	1.4000D+02	1.0800D+02	1.1860D+02	0.0000D+00	0.0000D+00
11	1.1392D+02	8.6921D+01	1.1860D+02	0.0000D+00	0.0000D+00
12	7.1892D+01	3.9892D+01	2.4571D+00	0.0000D+00	0.0000D+00
13	5.9000D+01	2.7000D+01	2.5620D+02	0.0000D+00	0.0000D+00
14	6.9312D+01	3.7312D+01	2.5620D+02	0.0000D+00	0.0000D+00
15	1.2271D+02	1.1151D+03	2.4571D+00	0.0000D+00	3.8692D-01
16	1.8536D+02	1.5336D+02	1.0000D+00	0.0000D+00	0.0000D+00
17	1.0949D+02	7.7488D+01	1.0000D+00	0.0000D+00	0.0000D+00
18	1.2903D+02	9.7028D+01	2.4571D+00	0.0000D+00	0.0000D+00
19	7.1892D+01	1.0923D+03	2.4571D+00	0.0000D+00	3.8692D-01

UNIT NO.	UNIT TYPE	HEAT TRANSFER
1	D	2.5000D+03
2	R	4.8352D+02
3	C	2.6419D+03
4	E	2.6465D+03
5	A	2.5046D+03

Table A.2. Single-stage heat transformer, water–ammonia

```
SINGLE STAGE HEAT TRANSFORMER - WATER/AMMONIA
TOLERANCES IN F, X          1.0D-03      1.0D-08
NO. OF UNITS        5
NO. OF STATE POINTS       19
 1    2   9.2700D+01
 5   15   10   11    6   17    0
 2    3   6.4000D+01
 6    7    4    5    0    0    0
 3    4   2.4480D+02
15   12   13   14   19    0    0
 4    5   3.7890D+02
12    3    1    2   18    0    0
 5    1   6.5820D+02
 7    8    3    9    4   16    0
STARTING POINTS
    1    3    0  160.0    0   115.40    0    0.0    0      0.0
    2    3    1  120.0    0   115.40    0    0.0    0      0.0
    3    3    0  140.0    0   126.80    0    0.0    0      0.0
    4    1    1  120.0    1    30.00    1   75.0    0      0.0
    5    1    1  120.0    1    30.00    1   75.0    0      0.0
    6    1    2  120.0    0    27.50    2   45.0    0      0.0
    7    1    1  120.0    0    27.50    2   45.0    0      0.0
    8    2    1  120.0    2     2.50    3   90.0    2    240.0
    9    3    1  120.0    0   126.80    0    0.0    0      0.0
   10    3    0  160.0    0   184.40    0    0.0    0      0.0
   11    3    1  120.0    0   184.40    0    0.0    0      0.0
   12    1    1  120.0    2     2.50    3   90.0    0      0.0
   13    3    0   59.0    0   163.70    0    0.0    0      0.0
   14    3    1  120.0    0   163.70    0    0.0    0      0.0
   15    2    2  120.0    2     2.50    3   90.0    1    110.0
   16    1    1  120.0    0     1.00    0    0.0    0      0.0
   17    1    1  120.0    0     1.00    0    0.0    0      0.0
   18    1    1  120.0    2     2.50    3   90.0    0      0.0
   19    2    2  120.0    2     2.50    3   90.0    1    110.0
```

Table A.2 (Continued)

```
STARTING TEMPERATURES AFTER CONSTRAINTS WERE APPLIED
  1      160.0    0
  2      120.0    1
  3      140.0    0
  4      145.0    1
  5      127.5    1
  6      122.5    2
  7      120.0    1
  8      120.0    1
  9      145.0    1
 10      160.0    0
 11      120.0    1
 12      120.0    1
 13       59.0    0
 14      120.0    1
 15      122.5    2
 16      150.0    1
 17      110.0    1
 18      110.0    1
 19      122.5    2
NO. OF VARIABLES          20
NO. OF TEMPERATURES       13
NO. OF CONCENTRATIONS      3
NO. OF FLOWS               2
NO. OF PRESSURES           2


LAST ITERATION NO. IS    109
IER =      2
  1  1.2228D+02  6.6911D-03
  2  1.5074D+02  0.0000D+00
  3  1.3321D+02 -1.9348D-07
  4  1.1994D+02  9.6405D-05
  5  1.4207D+02 -2.2435D-10
  6  1.4738D+02  6.6613D-15
  7  1.6892D+02 -1.3691D-03
  8  1.4002D+02  4.6748D-03
  9  6.6775D+01  1.3782D-06
 10  3.5696D+01 -6.6097D-07
 11  1.7133D+02 -1.1857D-06
 12  1.0058D+02  6.1286D-07
 13  1.1186D+02  2.3821D-10
 14  6.4884D+01 -4.5875D-09
 15  5.4956D+01 -2.2088D-03
 16  9.9379D+01 -2.5286D-10
 17  3.5416D+01 -3.5527D-15
 18  7.9155D+00  5.5643D-09
 19  2.5325D+02  5.3391D-07
 20  1.2148D+02  2.1409D-11
```

Table A.2 (Continued)

STATE POINT	TEMPERATURE	ENTHALPY	FLOW RATE	CONCENTRATION	PRESSURE
1	1.6000D+02	1.2800D+02	1.1540D+02	0.0000D+00	0.0000D+00
2	1.2228D+02	9.0285D+01	1.1540D+02	0.0000D+00	0.0000D+00
3	1.4000D+02	1.0800D+02	1.2680D+02	0.0000D+00	0.0000D+00
4	1.5074D+02	3.3078D+01	3.5416D+01	6.4884D+01	0.0000D+00
5	1.3321D+02	1.9545D+01	3.5416D+01	6.4884D+01	0.0000D+00
6	1.1994D+02	-1.0427D+01	2.7500D+01	5.4956D+01	0.0000D+00
7	1.4207D+02	1.4728D+01	2.7500D+01	5.4956D+01	0.0000D+00
8	1.4738D+02	5.3693D+02	7.9155D+00	9.9379D+01	2.5325D+02
9	1.6892D+02	1.3692D+02	1.2680D+02	0.0000D+00	0.0000D+00
10	1.6000D+02	1.2800D+02	1.3440D+02	0.0000D+00	0.0000D+00
11	1.4002D+02	1.0802D+02	1.3440D+02	0.0000D+00	0.0000D+00
12	6.6775D+01	3.7085D+01	7.9155D+00	9.9379D+01	0.0000D+00
13	5.9000D+01	2.7000D+01	1.6370D+02	0.0000D+00	0.0000D+00
14	8.5696D+01	5.3696D+01	1.6370D+02	0.0000D+00	0.0000D+00
15	1.1994D+02	5.3918D+02	7.9155D+00	9.9379D+01	1.2148D+02
16	1.7133D+02	1.3923D+02	1.0000D+00	0.0000D+00	0.0000D+00
17	1.0058D+02	8.6914D+01	1.0000D+00	0.0000D+00	0.0000D+00
18	1.1186D+02	8.9375D+01	7.9155D+00	9.9379D+01	0.0000D+00
19	1.1994D+02	5.3918D+02	7.9155D+00	9.9379D+01	1.2148D+02

UNIT NO.	UNIT TYPE	HEAT TRANSFER
1	D	3.6848D+03
2	R	6.9177D+02
3	C	4.3702D+03
4	E	4.3523D+03
5	A	3.6669D+03

Table A.3. Double-stage heat transformer, Li Br–water

```
DOUBLE STAGE HEAT TRANSFORMER - LI BR/WATER
TOLERANCES IN F, X          1.0D-05      1.0D-08
NO. OF UNITS      11
NO. OF STATE POINTS      35
 1    1  6.3600D+00
 7    3  30    9    4   12    0
 2    5  1.1540D+01
10    8   1    2   33    0    0
 3    3  1.1800D+00
 6    7   4    5    0    0    0
 4    1  3.0200D+00
17   18  13   19   14   22    0
 5    5  5.9200D+00
11   18  32    3   34    0    0
 6    3  1.1600D+00
16   17  14   15    0    0    0
 7    2  6.0400D+00
25   27  20   21   26   29    0
 8    4  1.4930D+01
27   28  23   24   35    0    0
 9    7  1.0000D+00
15    5  25    0    0    0    0
10    7  1.0000D+00
31    3  30    0    0    0    0
11    8  1.0000D+00
10   11  28    0    0    0    0
```

Table A.3 (Continued)

STARTING POINTS

1	3	0	140.0	0	12.60	0	0.0	0	0.0
2	3	1	100.0	0	12.60	0	0.0	0	0.0
3	3	1	100.0	0	3.68	0	0.0	0	0.0
4	1	1	100.0	1	0.32	1	45.0	0	0.0
5	1	1	100.0	1	0.32	1	45.0	0	0.0
6	1	2	100.0	0	0.74	3	55.0	0	0.0
7	1	1	100.0	0	0.74	3	55.0	0	0.0
8	2	5	100.0	2	0.08	0	0.0	1	3.0
9	3	3	100.0	0	4.68	0	0.0	0	0.0
10	3	4	100.0	2	0.08	0	0.0	0	0.0
11	3	4	100.0	3	0.04	0	0.0	0	0.0
12	3	1	100.0	0	0.74	0	0.0	0	0.0
13	3	3	100.0	0	1.00	0	0.0	0	0.0
14	1	1	100.0	4	0.43	2	45.0	0	0.0
15	1	1	100.0	4	0.43	2	45.0	0	0.0
16	1	2	100.0	0	0.39	3	55.0	0	0.0
17	1	1	100.0	0	0.39	3	55.0	0	0.0
18	2	6	100.0	3	0.04	0	0.0	2	3.0
19	3	1	100.0	0	1.00	0	0.0	0	0.0
20	3	0	140.0	0	15.70	0	0.0	0	0.0
21	3	1	100.0	0	15.70	0	0.0	0	0.0
22	3	1	100.0	0	0.39	0	0.0	0	0.0
23	3	0	59.0	0	16.30	0	0.0	0	0.0
24	3	1	100.0	0	16.30	0	0.0	0	0.0
25	1	1	100.0	5	1.25	4	45.0	0	0.0
26	1	2	100.0	0	1.13	3	55.0	0	0.0
27	2	2	100.0	6	0.12	0	0.0	3	1.0
28	3	4	100.0	6	0.12	0	0.0	0	0.0
29	3	1	100.0	5	1.25	0	0.0	0	0.0
30	3	1	100.0	0	4.68	0	0.0	0	0.0
31	3	0	140.0	0	1.00	0	0.0	0	0.0
32	3	3	100.0	0	3.68	0	0.0	0	0.0
33	3	5	100.0	2	0.08	0	0.0	0	0.0
34	3	6	100.0	3	0.04	0	0.0	0	0.0
35	2	4	100.0	6	0.12	0	0.0	3	1.0

Table A.3 (Continued)

STARTING TEMPERATURES AFTER CONSTRAINTS WERE APPLIED

1	140.0	0
2	100.0	1
3	100.0	1
4	105.0	1
5	100.0	1
6	90.0	2
7	100.0	1
8	90.0	5
9	105.0	3
10	110.0	4
11	110.0	4
12	110.0	1
13	105.0	3
14	110.0	1
15	100.0	1
16	90.0	2
17	100.0	1
18	90.0	6
19	110.0	1
20	140.0	0
21	100.0	1
22	120.0	1
23	59.0	0
24	100.0	1
25	100.0	1
26	90.0	2
27	90.0	2
28	110.0	4
29	80.0	1
30	100.0	1
31	140.0	0
32	105.0	3
33	90.0	5
34	90.0	6
35	110.0	4

NO. OF VARIABLES	34
NO. OF TEMPERATURES	21
NO. OF CONCENTRATIONS	4
NO. OF FLOWS	6
NO. OF PRESSURES	3

Table A.3 (Continued)

```
LAST ITERATION NO. IS    113
IER =      1
  1   1.3338D+02 -2.8422D-14
  2   1.6215D+02  6.7502D-14
  3   1.7096D+02  1.3287D-12
  4   1.3827D+02  2.1672D-12
  5   1.2305D+02 -1.5266D-15
  6   1.6135D+02  0.0000D+00
  7   1.2896D+02 -1.5408D-11
  8   1.7419D+02 -1.8817D-07
  9   7.1990D+01  0.0000D+00
 10   1.8541D+02  6.4393D-15
 11   2.0447D+02  1.8585D-13
 12   1.4179D+02 -2.4869D-14
 13   1.9656D+02 -5.3291D-14
 14   1.5915D+02  3.3396D-13
 15   2.1503D+02  3.1193D-12
 16   1.3245D+02  2.7756D-17
 17   2.1953D+02  1.7347D-13
 18   6.6792D+01  2.3422D-14
 19   1.3949D+02  5.2189D-12
 20   1.0985D+02  1.4211D-14
 21   1.5743D+02  4.7740D-14
 22   4.8031D+01  3.4794D-13
 23   5.3054D+01 -8.8818D-14
 24   4.8048D+01  8.1712D-14
 25   4.8037D+01 -1.2257D-12
 26   8.1849D-01  5.7554D-13
 27   7.7488D-02 -7.1054D-15
 28   4.0632D-02  1.2079D-13
 29   4.3063D-01  0.0000D+00
 30   1.2491D+00  0.0000D+00
 31   1.1812D-01  2.2204D-16
 32   2.1606D+00 -5.4712D-13
 33   4.6455D+00  5.6843D-14
 34   3.8817D-01  0.0000D+00
```

Table A.3 (Continued)

STATE POINT	TEMPERATURE	ENTHALPY	FLOW RATE	CONCENTRATION	PRESSURE
1	1.4000D+02	1.0800D+02	1.2600D+01	0.0000D+00	0.0000D+00
2	1.3338D+02	1.0138D+02	1.2600D+01	0.0000D+00	0.0000D+00
3	1.6216D+02	1.3016D+02	3.6800D+00	0.0000D+00	0.0000D+00
4	1.7096D+02	7.0417D+01	8.1849D-01	4.8031D+01	0.0000D+00
5	1.3827D+02	5.2829D+01	8.1849D-01	4.8031D+01	0.0000D+00
6	1.2305D+02	4.7439D+01	7.4100D-01	5.3054D+01	0.0000D+00
7	1.6135D+02	6.6867D+01	7.4100D-01	5.3054D+01	0.0000D+00
8	1.2896D+02	1.1170D+03	7.7488D-02	0.0000D+00	2.1606D+00
9	1.7419D+02	1.4219D+02	4.6800D+00	0.0000D+00	0.0000D+00
10	7.1990D+01	3.9990D+01	7.7488D-02	0.0000D+00	0.0000D+00
11	7.1990D+01	3.9990D+01	4.0632D-02	0.0000D+00	0.0000D+00
12	1.8541D+02	1.5341D+02	7.4100D-01	0.0000D+00	0.0000D+00
13	1.7419D+02	1.4219D+02	1.0000D+00	0.0000D+00	0.0000D+00
14	2.0447D+02	8.8523D+01	4.3063D-01	4.8048D+01	0.0000D+00
15	1.4179D+02	5.4715D+01	4.3063D-01	4.8048D+01	0.0000D+00
16	1.2305D+02	4.7439D+01	3.9000D-01	5.3054D+01	0.0000D+00
17	1.9656D+02	8.4770D+01	3.9000D-01	5.3054D+01	0.0000D+00
18	1.5915D+02	1.1296D+03	4.0632D-02	0.0000D+00	4.6455D+00
19	2.1503D+02	1.8303D+02	1.0000D+00	0.0000D+00	0.0000D+00
20	1.4000D+02	1.0800D+02	1.5700D+01	0.0000D+00	0.0000D+00
21	1.3245D+02	1.0045D+02	1.5700D+01	0.0000D+00	0.0000D+00
22	2.1953D+02	1.8753D+02	3.9000D-01	0.0000D+00	0.0000D+00
23	5.9000D+01	2.7000D+01	1.6300D+01	0.0000D+00	0.0000D+00
24	6.6792D+01	3.4792D+01	1.6300D+01	0.0000D+00	0.0000D+00
25	1.3949D+02	5.3479D+01	1.2491D+00	4.8037D+01	0.0000D+00
26	1.2305D+02	4.7439D+01	1.1310D+00	5.3054D+01	0.0000D+00
27	1.2305D+02	1.1153D+03	1.1812D-01	0.0000D+00	3.8817D-01
28	7.1990D+01	3.9990D+01	1.1812D-01	0.0000D+00	0.0000D+00
29	1.0985D+02	7.7854D+01	1.2491D+00	0.0000D+00	0.0000D+00
30	1.5743D+02	1.2543D+02	4.6800D+00	0.0000D+00	0.0000D+00
31	1.4000D+02	1.0800D+02	1.0000D+00	0.0000D+00	0.0000D+00
32	1.7419D+02	1.4219D+02	3.6800D+00	0.0000D+00	0.0000D+00
33	1.2896D+02	9.6958D+01	7.7488D-02	0.0000D+00	0.0000D+00
34	1.5915D+02	1.2715D+02	4.0632D-02	0.0000D+00	0.0000D+00
35	7.1990D+01	1.0923D+03	1.1812D-01	0.0000D+00	3.8817D-01

UNIT NO.	UNIT TYPE	HEAT TRANSFER
1	A	7.8465D+01
2	E	8.3454D+01
3	R	1.4395D+01
4	A	4.0835D+01
5	E	4.4271D+01
6	R	1.4559D+01
7	D	1.1859D+02
8	C	1.2701D+02
9	M	0.0000D+00
10	M	0.0000D+00
11	S	0.0000D+00

Table A.4. Single-stage chiller, Li Br–water

```
SINGLE STAGE CHILLER                    - LI BR/WATER
TOLERANCES IN F, X          1.0D-05      1.0D-08
NO. OF UNITS        5
NO. OF STATE POINTS       19
 1    5   3.6830D+02
15    3    1    2   18    0    0
 2    3   4.5100D+01
11   12    6    7    0    0    0
 3    2   1.9280D+02
 7   10    8    9   11   17    0
 4    4   4.1220D+02
10   15   13   14   19    0    0
 5    1   2.0640D+02
12    3    4    5    6   16    0
STARTING POINTS
   1     3    0   55.0    0   402.10    0    0.0    0    0.0
   2     3    1   60.0    0   402.10    0    0.0    0    0.0
   3     2    3   60.0    1     3.70    0    0.0    1    1.0
   4     3    0   85.0    0    59.30    0    0.0    0    0.0
   5     3    1   60.0    0    59.30    0    0.0    0    0.0
   6     1    1   60.0    0    23.70    1   45.0    0    0.0
   7     1    1   60.0    0    23.70    1   45.0    0    0.0
   8     3    0  180.0    0   113.60    0    0.0    0    0.0
   9     3    1   60.0    0   113.60    0    0.0    0    0.0
  10     2    2   60.0    1     3.70    0    0.0    2    3.0
  11     1    2   60.0    2    20.00    2   55.0    0    0.0
  12     1    1   60.0    2    20.00    2   55.0    0    0.0
  13     3    0   85.0    0   256.20    0    0.0    0    0.0
  14     3    1   60.0    0   256.20    0    0.0    0    0.0
  15     3    4   60.0    1     3.70    0    0.0    0    0.0
  16     3    1   60.0    0     0.00    0    0.0    0    0.0
  17     3    1   60.0    0     0.00    0    0.0    0    0.0
  18     3    3   60.0    1     3.70    0    0.0    0    0.0
  19     2    4   60.0    1     3.70    0    0.0    2    3.0
```

Table A.4 (Continued)

STARTING TEMPERATURES AFTER CONSTRAINTS WERE APPLIED

1	55.0	0
2	54.0	1
3	50.0	3
4	85.0	0
5	86.0	1
6	86.0	1
7	60.0	1
8	180.0	0
9	60.0	1
10	92.0	2
11	92.0	2
12	88.0	1
13	85.0	0
14	86.0	1
15	90.0	4
16	88.0	1
17	56.0	1
18	50.0	3
19	90.0	4

NO. OF VARIABLES	18
NO. OF TEMPERATURES	12
NO. OF CONCENTRATIONS	2
NO. OF FLOWS	2
NO. OF PRESSURES	2

Table A.4 (Continued)

LAST ITERATION NO. IS 138
IER = 1

1	5.1249D+01	-3.5300D-11
2	4.8747D+01	-1.2585D-08
3	1.1522D+02	1.5632D-13
4	1.0516D+02	1.8758D-12
5	1.5362D+02	-3.8085D-12
6	1.6423D+02	-2.2382D-13
7	1.6933D+02	-3.5527D-14
8	1.1492D+02	7.7307D-12
9	9.1194D+01	-4.5475D-12
10	9.2744D+01	0.0000D+00
11	1.1791D+02	-1.5348D-12
12	1.5543D+02	0.0000D+00
13	5.5604D+01	-7.4607D-14
14	5.9298D+01	-1.8474D-13
15	1.4763D+00	-1.6655D-11
16	2.2224D+01	-4.8317D-12
17	1.6998D-01	3.5527D-15
18	7.6049D-01	-1.3323D-15

STATE POINT	TEMPERATURE	ENTHALPY	FLOW RATE	CONCENTRATION	PRESSURE
1	5.5000D+01	2.3000D+01	4.0210D+02	0.0000D+00	0.0000D+00
2	5.1249D+01	1.9249D+01	4.0210D+02	0.0000D+00	0.0000D+00
3	4.8747D+01	1.0823D+03	1.4763D+00	0.0000D+00	1.6998D-01
4	8.5000D+01	5.3000D+01	5.9300D+01	0.0000D+00	0.0000D+00
5	1.1522D+02	8.3217D+01	5.9300D+01	0.0000D+00	0.0000D+00
6	1.0516D+02	4.1770D+01	2.3700D+01	5.5604D+01	0.0000D+00
7	1.5362D+02	6.5548D+01	2.3700D+01	5.5604D+01	0.0000D+00
8	1.8000D+02	1.4800D+02	1.1860D+02	0.0000D+00	0.0000D+00
9	1.6423D+02	1.3223D+02	1.1860D+02	0.0000D+00	0.0000D+00
10	1.6933D+02	1.1357D+03	1.4763D+00	0.0000D+00	7.6049D-01
11	1.6933D+02	7.8635D+01	2.2224D+01	5.9298D+01	0.0000D+00
12	1.1492D+02	5.3277D+01	2.2224D+01	5.9298D+01	0.0000D+00
13	8.5000D+01	5.3000D+01	2.5620D+02	0.0000D+00	0.0000D+00
14	9.1194D+01	5.9194D+01	2.5620D+02	0.0000D+00	0.0000D+00
15	9.2744D+01	6.0744D+01	1.4763D+00	0.0000D+00	0.0000D+00
16	1.1791D+02	8.5914D+01	0.0000D+00	0.0000D+00	0.0000D+00
17	1.5543D+02	1.2343D+02	0.0000D+00	0.0000D+00	0.0000D+00
18	4.8747D+01	1.6747D+01	1.4763D+00	0.0000D+00	0.0000D+00
19	9.2744D+01	1.1012D+03	1.4763D+00	0.0000D+00	7.6049D-01

UNIT NO.	UNIT TYPE	HEAT TRANSFER
1	E	1.5081D+03
2	R	-5.6354D+02
3	D	1.8707D+03
4	C	1.5869D+03
5	A	1.7919D+03

A.2 RESULTS OF VALIDATION

Tables A.5 through A.14 give the detailed results of validation. The run number in these tables refers to the experimental run in ORNL/TM-9072, *Performance Test Results of a Lithium Bromide-Water Absorption Heat Pump That Uses Low-Temperature [60°C (140°F)] Waste Heat*, by W. R. Huntley, published by Oak Ridge National Laboratory in 1984. The first page of each table is a printout of the input data, as described in Sect. A.1. The second page of each table starts with a list of the functions δ_i at the last iteration. The validation is summarized in the next block of data, which shows, for every state point, the calculated (C) and measured (M) temperatures, flow rates, concentrations, and pressures. Measured values are shown only for favorable parameters. Where no measured value is given, the parameter has the fixed value in the column marked "C" for calculated. All units in Tables A.5 through A.14 are the same as those for Tables A.1 through A.4 and can be found in Sect. A.1 of this Appendix.

Table A.5. Single-stage heat transformer, Li Br–water: run 114

```
SINGLE STAGE HEAT TRANSFORMER   - LI BR/ WATER  : RUN NO. 114
TOLERANCES IN F, X        1.0D-05      1.0D-08
NO. OF UNITS        5
NO. OF STATE POINTS       19
 1    2  1.6110D+02
 5   15  10   11    6   17
 2    3  7.4300D+01
 6    7   4    5    0    0    0
 3    4  6.0470D+02
15   12  13   14   19    0    0
 4    5  5.1770D+02
12    8   1    2   18    0    0
 5    1  1.8620D+02
 7    3   3    9    4   16    0
STARTING POINTS
    1     3    0 140.0    0  286.80    0    0.0    0    0.0
    2     3    1 120.0    0  286.80    0    0.0    0    0.0
    3     3    0 139.9    0   60.98    0    0.0    0    0.0
    4     1    1 120.0    1   10.00    1   45.0    0    0.0
    5     1    1 120.0    1   10.00    1   45.0    0    0.0
    6     1    2 120.0    0   30.73    2   55.0    0    0.0
    7     1    1 120.0    0   30.73    2   55.0    0    0.0
    8     2    3 120.0    2   10.00    0    0.0    1    3.0
    9     3    1 120.0    0   60.98    0    0.0    0    0.0
   10     3    0 140.0    0  247.23    0    0.0    0    0.0
   11     3    1 120.0    0  247.23    0    0.0    0    0.0
   12     3    4 120.0    2   10.00    0    0.0    0    0.0
   13     3    0  58.3    0  252.65    0    0.0    0    0.0
   14     3    1 120.0    0  252.65    0    0.0    0    0.0
   15     2    2 120.0    2   10.00    0    0.0    2    1.0
   16     3    1 120.0    0    1.00    0    0.0    0    0.0
   17     3    1 120.0    0    1.00    0    0.0    0    0.0
   18     3    3 120.0    2   10.00    0    0.0    0    0.0
   19     2    4 120.0    2   10.00    0    0.0    2    1.0
NO. OF VARIABLES          18
NO. OF TEMPERATURES       12
NO. OF CONCENTRATIONS      2
NO. OF FLOWS               2
NO. OF PRESSURES           2
```

Table A.5 (Continued)

LAST ITERATION NO. IS 107
IER = 3

VARIABLE NO.	FUN
1	-1.384D-11
2	-1.879D-11
3	-4.537D-10
4	-4.299D-09
5	5.288D-08
6	-1.102D-07
7	4.957D-11
8	5.514D-12
9	0.000D+00
10	-1.754D-07
11	-4.060D-07
12	0.000D+00
13	-1.673D-11
14	2.985D-09
15	-5.251D-08
16	-1.778D-07
17	-6.573D-13
18	2.665D-15

STATE	TEMPERATURE		FLOW RATE		CONCENTRATION		PRESSURE	
POINT	C	M	C	M	C	M	C	M
1	140.0		286.80					
2	130.3	130.0	286.80					
3	139.9		60.98					
4	174.9	171.3	33.32	33.4	49.50	49.6		
5	136.1	140.4	33.32	"	49.50	"		
6	123.9	124.7	30.73		53.67	52.6		
7	168.2	161.8	30.73		53.67	"		
8	128.4	128.0	2.59	2.67			2.13	2.11
9	183.4	179.4	60.98					
10	140.0		247.23					
11	129.3	129.7	247.23					
12	70.9	73.4	2.59	2.67				
13	58.8		252.65					
14	69.8	70.2	252.65					
15	123.9	124.7	2.59	2.67			0.37	0.38
16	187.3	181.1						
17	112.5	113.5						
18	128.4	128.0						
19	70.9	73.4					0.37	0.38

UNIT NO.	UNIT TYPE	HEAT TRANSFER C	M
1	D	2650	2530
2	R	685	835
3	C	2790	2880
4	E	2790	2870
5	A	2650	2500

Table A.6. Single-stage heat transformer, Li Br–water: run 137

```
SINGLE STAGE HEAT TRANSFORMER   - LI BR /WATER  : RUN NO.  137
TOLERANCES IN F, X        1.0D-05      1.0D-08
NO. OF UNITS       5
NO. OF STATE POINTS      19
 1   2  1.4440D+02
 5  15  10  11   6  17
 2   3  1.0700D+01
 6   7   4   5   0   0   0
 3   4  5.5490D+02
15  12  13  14  19   0   0
 4   5  6.0210D+02
12   3   1   2  18   0   0
 5   1  2.2640D+02
 7   8   3   9   4  16   0
STARTING POINTS
    1    3   0 150.5   0  412.00   0   0.0   0   0.0
    2    3   1 120.0   0  412.00   0   0.0   0   0.0
    3    3   0 150.4   0   60.48   0   0.0   0   0.0
    4    1   1 120.0   1   10.00   1  45.0   0   0.0
    5    1   1 120.0   1   10.00   1  45.0   0   0.0
    6    1   2 120.0   0   15.58   2  55.0   0   0.0
    7    1   1 120.0   0   15.58   2  55.0   0   0.0
    8    2   3 120.0   2   10.00   0   0.0   1   3.0
    9    3   1 120.0   0   60.48   0   0.0   0   0.0
   10    3   0 150.5   0  119.00   0   0.0   0   0.0
   11    3   1 120.0   0  119.00   0   0.0   0   0.0
   12    3   4 120.0   2   10.00   0   0.0   0   0.0
   13    3   0  76.7   0  250.73   0   0.0   0   0.0
   14    3   1 120.0   0  250.73   0   0.0   0   0.0
   15    2   2 120.0   2   10.00   0   0.0   2   1.0
   16    3   1 120.0   0    1.00   0   0.0   0   0.0
   17    3   1 120.0   0    1.00   0   0.0   0   0.0
   18    3   3 120.0   2   10.00   0   0.0   0   0.0
   19    2   4 120.0   2   10.00   0   0.0   2   1.0
NO. OF VARIABLES          18
NO. OF TEMPERATURES       12
NO. OF CONCENTRATIONS      2
NO. OF FLOWS               2
NO. OF PRESSURES           2
```

Table A.6 (Continued)

LAST ITERATION NO. IS 87
IER = 3

VARIABLE NO.	FUN
1	-1.350D-13
2	1.208D-13
3	-1.194D-11
4	6.025D-12
5	-5.187D-13
6	-9.948D-14
7	3.411D-13
8	-2.785D-12
9	0.000D+00
10	-3.411D-13
11	-5.053D-11
12	0.000D+00
13	-3.197D-14
14	6.040D-14
15	1.228D-11
16	3.979D-12
17	0.000D+00
18	1.554D-15

STATE POINT	TEMPERATURE C	TEMPERATURE M	FLOW RATE C	FLOW RATE M	CONCENTRATION C	CONCENTRATION M	PRESSURE C	PRESSURE M
1	150.5		412.00					
2	144.4	144.4	412.00					
3	150.4		60.48					
4	173.9	171.1	17.92	17.97	43.97	45.0		
5	154.1	156.9	17.92	"	43.97	"		
6	133.0	130.3	15.58		50.58	49.2		
7	157.5	152.8	15.58		50.58	"		
8	142.6	142.5	2.34	2.39			3.09	3.08
9	188.4	184.1	60.48					
10	150.5		119.00					
11	131.3	131.8	119.00					
12	87.9	89.1	2.34	2.39				
13	76.7		250.73					
14	86.7	87.3	250.73					
15	133.0	130.3	2.34	2.39			0.65	0.67
16	191.5	186.6						
17	116.9	120.3						
18	142.6	142.5						
19	87.9	89.1					0.65	0.67

UNIT NO.	UNIT TYPE	HEAT TRANSFER C	HEAT TRANSFER M
1	D	2290	2270
2	R	199	226
3	C	2490	2670
4	E	2490	2550
5	A	2300	2160

Table A.7. Single-stage heat transformer, Li Br–water: run 145

```
SINGLE STAGE HEAT TRANSFORMER   - LI BR /WATER  : RUN NO.  145
TOLERANCES IN F, X          1.0D-05      1.0D-08
NO. OF UNITS        5
NO. OF STATE POINTS       19
 1    2  1.4040D+02
 5   15  10   11    6   17
 2    3  1.2100D+01
 6    7   4    5    0    0    0
 3    4  4.7690D+02
15   12  13   14   19    0    0
 4    5  6.4010D+02
12    3   1    2   18    0    0
 5    1  1.9900D+02
 7    3   3    9    4   16    0
STARTING POINTS
    1     3    0 140.3    0   234.50    0    0.0    0    0.0
    2     3    1 120.0    0   284.50    0    0.0    0    0.0
    3     3    0 140.3    0    60.14    0    0.0    0    0.0
    4     1    1 120.0    1    10.00    1   45.0    0    0.0
    5     1    1 120.0    1    10.00    1   45.0    0    0.0
    6     1    2 120.0    0    15.16    2   55.0    0    0.0
    7     1    1 120.0    0    15.16    2   55.0    0    0.0
    8     2    3 120.0    2    10.00    0    0.0    1    3.0
    9     3    1 120.0    0    60.14    0    0.0    0    0.0
   10     3    0 140.4    0   244.70    0    0.0    0    0.0
   11     3    1 120.0    0   244.70    0    0.0    0    0.0
   12     3    4 120.0    2    10.00    0    0.0    0    0.0
   13     3    0  59.3    0   253.60    0    0.0    0    0.0
   14     3    1 120.0    0   253.60    0    0.0    0    0.0
   15     2    2 120.0    2    10.00    0    0.0    2    1.0
   16     3    1 120.0    0     1.00    0    0.0    0    0.0
   17     3    1 120.0    0     1.00    0    0.0    0    0.0
   18     3    3 120.0    2    10.00    0    0.0    0    0.0
   19     2    4 120.0    2    10.00    0    0.0    2    1.0
NO. OF VARIABLES          18
NO. OF TEMPERATURES       12
NO. OF CONCENTRATIONS      2
NO. OF FLOWS               2
NO. OF PRESSURES           2
```

Table A.7 (Continued)

LAST ITERATION NO. IS 56
IER = 2

VARIABLE NO.	FUN
1	1.734D-10
2	1.511D-10
3	1.673D-09
4	4.063D-08
5	8.223D-09
6	-1.469D-09
7	2.103D-11
8	9.720D-12
9	3.553D-15
10	-1.037D-03
11	-3.397D-03
12	-3.553D-15
13	1.205D-10
14	9.500D-10
15	-9.890D-09
16	-6.866D-08
17	-4.619D-14
18	8.882D-16

STATE	TEMPERATURE		FLOW RATE		CONCENTRATION		PRESSURE	
POINT	C	M	C	M	C	M	C	M
1	140.3		284.50					
2	130.7	130.6	284.50					
3	140.3		60.14					
4	166.3	166.6	17.69	17.74	46.25	47.6		
5	145.9	149.9	17.69	"	46.25	"		
6	126.6	125.4	15.16		53.96	52.4		
7	152.6	148.6	15.16		53.96	"		
8	129.6	129.4	2.53	2.58			2.20	2.19
9	183.1	179.0	60.14					
10	140.4		244.70					
11	129.9	130.4	244.70					
12	72.5	74.1	2.53	2.58				
13	59.8		253.60					
14	70.5	70.8	253.60					
15	126.6	125.4	2.53	2.58			0.39	0.40
16	188.3	183.0						
17	106.1	110.2		-				
18	129.6	129.4						
19	72.5	74.1					0.39	0.40

UNIT NO.	UNIT TYPE	HEAT TRANSFER C	M
1	D	2570	2480
2	R	198	241
3	C	2720	2800
4	E	2720	2730
5	A	2570	2430

Table A.8. Single-stage heat transformer, Li Br–water: run 149

```
SINGLE STAGE HEAT TRANSFORMER   - LI BR /WATER  : RUN NO. 149
TOLERANCES IN F, X          1.0D-05      1.0D-08
NO. OF UNITS        5
NO. OF STATE POINTS       19
 1   2  2.1160D+02
 5  15  10  11   6  17
 2   3  2.2500D+01
 6   7   4   5   0   0   0
 3   4  4.1960D+02
15  12  13  14  19   0   0
 4   5  5.6630D+02
12   8   1   2  18   0   0
 5   1  1.8830D+02
 7   8   3   9   4  16   0
STARTING POINTS
    1    3   0 184.0   0  289.20   0   0.0   0   0.0
    2    3   1 120.0   0  289.20   0   0.0   0   0.0
    3    3   0 183.9   0   59.48   0   0.0   0   0.0
    4    1   1 120.0   1   10.00   1  45.0   0   0.0
    5    1   1 120.0   1   10.00   1  45.0   0   0.0
    6    1   2 120.0   0   25.00   2  55.0   0   0.0
    7    1   1 120.0   0   25.00   2  55.0   0   0.0
    8    2   3 120.0   2   10.00   0   0.0   1   3.0
    9    3   1 120.0   0   59.48   0   0.0   0   0.0
   10    3   0 184.0   0  240.90   0   0.0   0   0.0
   11    3   1 120.0   0  240.90   0   0.0   0   0.0
   12    3   4 120.0   2   10.00   0   0.0   0   0.0
   13    3   0  62.6   0  254.40   0   0.0   0   0.0
   14    3   1 120.0   0  254.40   0   0.0   0   0.0
   15    2   2 120.0   2   10.00   0   0.0   2   1.0
   16    3   1 120.0   0    1.00   0   0.0   0   0.0
   17    3   1 120.0   0    1.00   0   0.0   0   0.0
   18    3   3 120.0   2   10.00   0   0.0   0   0.0
   19    2   4 120.0   2   10.00   0   0.0   2   1.0
NO. OF VARIABLES          18
NO. OF TEMPERATURES       12
NO. OF CONCENTRATIONS      2
NO. OF FLOWS               2
NO. OF PRESSURES           2
```

Table A.8 (Continued)

LAST ITERATION NO. IS 68
IER = 2

VARIABLE NO.	FUN
1	-2.934D-11
2	-1.034D-11
3	1.618D-09
4	2.638D-11
5	-2.216D-07
6	8.621D-08
7	-2.665D-10
8	-1.328D-10
9	3.553D-15
10	-1.967D-01
11	-5.383D-01
12	3.553D-15
13	-1.444D-11
14	-1.480D-08
15	2.204D-07
16	9.420D-07
17	2.956D-12
18	2.887D-15

STATE	TEMPERATURE		FLOW RATE		CONCENTRATION		PRESSURE	
POINT	C	M	C	M	C	M	C	M
1	184.0		289.20					
2	169.1	167.5	289.20					
3	183.9		59.48					
4	231.1	223.7	28.99	29.42	53.33	54.8		
5	197.0	202.0	28.99	"	53.33	"		
6	168.9	165.8	25.00		61.84	60.7		
7	213.7	203.2	25.00		61.84	"		
8	166.6	164.8	3.99	4.42			5.54	5.31
9	253.4	245.9	59.48					
10	184.0		240.90					
11	166.8	167.6	240.90					
12	83.7	85.3	3.99	4.42				
13	62.6		254.40					
14	79.7	80.8	254.40					
15	168.9	165.8	3.99	4.42			0.57	0.60
16	261.3	251.8						
17	141.8	148.4						
18	166.6	164.8						
19	83.7	85.3					0.57	0.60

UNIT NO.	UNIT TYPE	HEAT TRANSFER C	M
1	D	4150	4010
2	R	503	596
3	C	4330	4630
4	E	4310	4770
5	A	4140	4060

Table A.9. Single-stage heat transformer, Li Br–water: run 153

```
SINGLE STAGE HEAT TRANSFORMER   - LI BR /WATER  : RUN NO.  153
TOLERANCES IN F, X        1.0D-05      1.0D-08
NO. OF UNITS        5
NO. OF STATE POINTS       19
 1   2  1.5120D+02
 5  15  10  11   6  17
 2   3  5.7500D+01
 6   7   4   5   0   0   0
 3   4  4.8140D+02
15  12  13  14  19   0   0
 4   5  6.3020D+02
12   8   1   2  18   0   0
 5   1  2.3940D+02
 7   8   3   9   4  16   0
STARTING POINTS
    1    3   0 141.0   0  374.60   0   0.0   0   0.0
    2    3   1 120.0   0  374.60   0   0.0   0   0.0
    3    3   0 140.0   0   60.14   0   0.0   0   0.0
    4    1   1 120.0   1   10.00   1  45.0   0   0.0
    5    1   1 120.0   1   10.00   1  45.0   0   0.0
    6    1   2 120.0   0   21.24   2  55.0   0   0.0
    7    1   1 120.0   0   21.24   2  55.0   0   0.0
    8    2   3 120.0   2   10.00   0   0.0   1   3.0
    9    3   1 120.0   0   60.14   0   0.0   0   0.0
   10    3   0 141.0   0  166.10   0   0.0   0   0.0
   11    3   1 120.0   0  166.10   0   0.0   0   0.0
   12    3   4 120.0   2   10.00   0   0.0   0   0.0
   13    3   0  59.4   0  254.15   0   0.0   0   0.0
   14    3   1 120.0   0  254.15   0   0.0   0   0.0
   15    2   2 120.0   2   10.00   0   0.0   2   1.0
   16    3   1 120.0   0    1.00   0   0.0   0   0.0
   17    3   1 120.0   0    1.00   0   0.0   0   0.0
   18    3   3 120.0   2   10.00   0   0.0   0   0.0
   19    2   4 120.0   2   10.00   0   0.0   2   1.0
NO. OF VARIABLES          18
NO. OF TEMPERATURES       12
NO. OF CONCENTRATIONS      2
NO. OF FLOWS               2
NO. OF PRESSURES           2
```

Table A.9 (Continued)

LAST ITERATION NO. IS 67
IER = 2

VARIABLE NO.	FUN
1	5.249D-11
2	2.108D-11
3	-8.977D-10
4	3.782D-10
5	-7.224D-07
6	1.335D-06
7	2.941D-10
8	1.532D-10
9	0.000D+00
10	-2.556D-05
11	-5.507D-05
12	0.000D+00
13	1.140D-11
14	-5.557D-08
15	7.228D-07
16	3.749D-06
17	-4.633D-12
18	2.887D-15

STATE POINT	TEMPERATURE C	TEMPERATURE M	FLOW RATE C	FLOW RATE M	CONCENTRATION C	CONCENTRATION M	PRESSURE C	PRESSURE M
1	141.0		374.60					
2	133.5	133.5	374.60					
3	140.9		60.14					
4	171.3	169.0	23.84	23.90	47.11	47.7		
5	135.1	138.8	23.84	"	47.11	"		
6	122.9	122.2	21.24		52.88	51.2		
7	166.2	161.5	21.24		52.88	"		
8	131.8	131.8	2.60	2.66			2.33	2.33
9	185.6	180.5	60.14					
10	141.0		166.10					
11	124.9	125.3	166.10					
12	72.3	74.3	2.60	2.66				
13	59.4		254.15					
14	70.4	70.82	254.15					
15	122.9	122.2	2.60	2.66			0.39	0.40
16	188.2	183.3						
17	107.5	109.6						
18	131.8	131.8						
19	72.3	74.3					0.39	0.40

UNIT NO.	UNIT TYPE	HEAT TRANSFER C	HEAT TRANSFER M
1	D	2680	2620
2	R	469	593
3	C	2790	2900
4	E	2800	2810
5	A	2690	2510

Table A.10. Single-stage heat transformer, Li Br–water: run 156

```
SINGLE STAGE HEAT TRANSFORMER   - LI BR /WATER  : RUN NO. 156
TOLERANCES IN F, X          1.0D-05      1.0D-08
NO. OF UNITS        5
NO. OF STATE POINTS       19
 1    2  2.0240D+02
 5   15  10   11    6   17
 2    3  2.0900D+01
 6    7   4    5    0    0    0
 3    4  4.0990D+02
15   12  13   14   19    0    0
 4    5  7.1940D+02
12    3   1    2   18    0    0
 5    1  1.8550D+02
 7    8   3    9    4   16    0
STARTING POINTS
    1     3    0 180.3    0  371.60    0    0.0    0    0.0
    2     3    1 120.0    0  371.60    0    0.0    0    0.0
    3     3    0 180.2    0   59.39    0    0.0    0    0.0
    4     1    1 120.0    1   10.00    1   45.0    0    0.0
    5     1    1 120.0    1   10.00    1   45.0    0    0.0
    6     1    2 120.0    0   25.10    2   55.0    0    0.0
    7     1    1 120.0    0   25.10    2   55.0    0    0.0
    8     2    3 120.0    2   10.00    0    0.0    1    3.0
    9     3    1 120.0    0   59.39    0    0.0    0    0.0
   10     3    0 180.3    0  159.40    0    0.0    0    0.0
   11     3    1 120.0    0  159.40    0    0.0    0    0.0
   12     3    4 120.0    2   10.00    0    0.0    0    0.0
   13     3    0  58.6    0  255.60    0    0.0    0    0.0
   14     3    1 120.0    0  255.60    0    0.0    0    0.0
   15     2    2 120.0    2   10.00    0    0.0    2    1.0
   16     3    1 120.0    0    1.00    0    0.0    0    0.0
   17     3    1 120.0    0    1.00    0    0.0    0    0.0
   18     3    3 120.0    2   10.00    0    0.0    0    0.0
   19     2    4 120.0    2   10.00    0    0.0    2    1.0
NO. OF VARIABLES          18
NO. OF TEMPERATURES       12
NO. OF CONCENTRATIONS      2
NO. OF FLOWS               2
NO. OF PRESSURES           2
```

Table A.10 (Continued)

LAST ITERATION NO. IS 109
IER = 3

VARIABLE NO.	FUN
1	-7.105D-14
2	4.974D-14
3	1.273D-11
4	-6.821D-12
5	-5.684D-12
6	2.899D-12
7	-9.095D-13
8	0.000D+00
9	0.000D+00
10	-9.095D-13
11	-2.728D-12
12	3.553D-15
13	5.684D-14
14	7.461D-14
15	-7.674D-12
16	-6.935D-12
17	-3.553D-15
18	2.220D-15

STATE POINT	TEMPERATURE C	TEMPERATURE M	FLOW RATE C	FLOW RATE M	CONCENTRATION C	CONCENTRATION M	PRESSURE C	PRESSURE M
1	180.3		371.60					
2	168.6	168.0	371.60					
3	180.2		59.39					
4	228.0	217.7	29.09	29.33	52.46	53.2		
5	191.9	195.3	29.09	"	52.46	"		
6	160.2	157.5	25.10		60.81	58.6		
7	207.3	194.4	25.10		60.81	"		
8	166.7	165.9	3.99	4.23			5.55	5.45
9	248.8	238.4	59.39					
10	180.3		159.40					
11	154.8	155.7	159.40					
12	79.8	82.1	3.99	4.23				
13	58.6		255.60					
14	75.6	77.2	255.60					
15	160.2	157.5	3.99	4.23			0.50	0.54
16	256.5	245.0						
17	134.6	139.4						
18	166.7	165.9						
19	79.8	82.1					0.50	0.54

UNIT NO.	UNIT TYPE	HEAT TRANSFER C	HEAT TRANSFER M
1	D	4070	4010
2	R	539	612
3	C	4330	4750
4	E	4330	4570
5	A	4070	3790

Table A.11. Single-stage heat transformer, Li Br–water: run 158

```
SINGLE STAGE HEAT TRANSFORMER   - LI BR /WATER  : RUN NO. 158
TOLERANCES IN F, X          1.0D-05      1.0D-08
NO. OF UNITS        5
NO. OF STATE POINTS       19
 1   2  1.8850D+02
 5  15  10  11   6  17
 2   3  2.9900D+01
 6   7   4   5   0   0   0
 3   4  5.6210D+02
15  12  13  14  19   0   0
 4   5  6.6770D+02
12   8   1   2  18   0   0
 5   1  1.9400D+02
 7   8   3   9   4  16   0
STARTING POINTS
    1    3   0 180.7   0  368.60   0   0.0   0   0.0
    2    3   1 120.0   0  368.60   0   0.0   0   0.0
    3    3   0 180.6   0   58.56   0   0.0   0   0.0
    4    1   1 120.0   1   10.00   1  45.0   0   0.0
    5    1   1 120.0   1   10.00   1  45.0   0   0.0
    6    1   2 120.0   0   25.60   2  55.0   0   0.0
    7    1   1 120.0   0   25.60   2  55.0   0   0.0
    8    2   3 120.0   2   10.00   0   0.0   1   3.0
    9    3   1 120.0   0   58.56   0   0.0   0   0.0
   10    3   0 180.7   0  157.90   0   0.0   0   0.0
   11    3   1 120.0   0  157.90   0   0.0   0   0.0
   12    3   4 120.0   2   10.00   0   0.0   0   0.0
   13    3   0  58.8   0  253.20   0   0.0   0   0.0
   14    3   1 120.0   0  253.20   0   0.0   0   0.0
   15    2   2 120.0   2   10.00   0   0.0   2   1.0
   16    3   1 120.0   0    1.00   0   0.0   0   0.0
   17    3   1 120.0   0    1.00   0   0.0   0   0.0
   18    3   3 120.0   2   10.00   0   0.0   0   0.0
   19    2   4 120.0   2   10.00   0   0.0   2   1.0
NO. OF VARIABLES          18
NO. OF TEMPERATURES       12
NO. OF CONCENTRATIONS      2
NO. OF FLOWS               2
NO. OF PRESSURES           2
```

Table A.11 (Continued)

LAST ITERATION NO. IS 87
IER = 2

VARIABLE NO.	FUN
1	-5.763D-11
2	-9.167D-11
3	-5.148D-10
4	-3.853D-08
5	1.490D-07
6	-1.062D-07
7	3.965D-10
8	1.528D-10
9	3.553D-15
10	-8.469D-05
11	-1.970D-04
12	3.553D-15
13	-1.452D-10
14	9.835D-09
15	-1.491D-07
16	-6.235D-07
17	-3.375D-12
18	1.776D-15

STATE	TEMPERATURE		FLOW RATE		CONCENTRATION		PRESSURE	
POINT	C	M	C	M	C	M	C	M
1	180.7		368.60					
2	169.0	168.3	368.60					
3	180.6		58.56					
4	229.1	218.6	29.58	29.82	52.76	53.6		
5	186.9	191.9	29.58	"	52.76	"		
6	158.6	156.1	25.60		60.96	59.2		
7	213.4	200.6	25.60		60.96	"		
8	166.7	165.9	3.98	4.22			5.55	5.44
9	251.0	241.5	58.56					
10	180.7		157.90					
11	154.6	155.6	157.90					
12	77.9	81.4	3.98	4.22				
13	58.8		253.20					
14	75.8	77.3	253.20					
15	158.6	156.1	3.98	4.22			0.47	0.50
16	257.8	247.1						
17	133.1	137.9						
18	166.7	165.9						
19	77.9	81.4					0.47	0.50

UNIT NO.	UNIT TYPE	HEAT TRANSFER C	M
1	D	4110	4010
2	R	639	744
3	C	4320	4680
4	E	4330	4570
5	A	4120	3890

Table A.12. Single-stage heat transformer, Li Br–water: run 161

```
SINGLE STAGE HEAT TRANSFORMER   - LI BR /WATER  : RUN NO. 161
TOLERANCES IN F, X          1.0D-05      1.0D-08
NO. OF UNITS        5
NO. OF STATE POINTS       19
 1   2  1.5670D+02
 5  15  10  11   6  17
 2   3  3.7700D+01
 6   7   4   5   0   0   0
 3   4  5.5270D+02
15  12  13  14  19   0   0
 4   5  4.6570D+02
12   8   1   2  18   0   0
 5   1  2.2910D+02
 7   8   3   9   4  16   0
STARTING POINTS
    1    3   0 144.4   0  293.80   0   0.0   0   0.0
    2    3   1 120.0   0  293.80   0   0.0   0   0.0
    3    3   0 144.3   0   58.06   0   0.0   0   0.0
    4    1   1 120.0   1   10.00   1  45.0   0   0.0
    5    1   1 120.0   1   10.00   1  45.0   0   0.0
    6    1   2 120.0   0   21.24   2  55.0   0   0.0
    7    1   1 120.0   0   21.24   2  55.0   0   0.0
    8    2   3 120.0   2   10.00   0   0.0   1   3.0
    9    3   1 120.0   0   58.06   0   0.0   0   0.0
   10    3   0 144.4   0  248.15   0   0.0   0   0.0
   11    3   1 120.0   0  248.15   0   0.0   0   0.0
   12    3   4 120.0   2   10.00   0   0.0   0   0.0
   13    3   0  62.1   0  253.65   0   0.0   0   0.0
   14    3   1 120.0   0  253.65   0   0.0   0   0.0
   15    2   2 120.0   2   10.00   0   0.0   2   1.0
   16    3   1 120.0   0    1.00   0   0.0   0   0.0
   17    3   1 120.0   0    1.00   0   0.0   0   0.0
   18    3   3 120.0   2   10.00   0   0.0   0   0.0
   19    2   4 120.0   2   10.00   0   0.0   2   1.0
NO. OF VARIABLES          18
NO. OF TEMPERATURES       12
NO. OF CONCENTRATIONS      2
NO. OF FLOWS               2
NO. OF PRESSURES           2
```

Table A.12 (Continued)

LAST ITERATION NO. IS 68
IER = 2

VARIABLE NO.	FUN
1	1.286D-12
2	1.666D-12
3	-1.592D-11
4	5.306D-10
5	1.207D-08
6	-1.595D-08
7	-6.480D-12
8	-1.251D-12
9	0.000D+00
10	-4.779D-04
11	-9.319D-04
12	0.000D+00
13	2.427D-12
14	9.441D-10
15	-1.205D-08
16	-6.899D-08
17	3.197D-14
18	2.220D-16

STATE	TEMPERATURE		FLOW RATE		CONCENTRATION		PRESSURE	
POINT	C	M	C	M	C	M	C	M
1	144.4		293.80					
2	134.9	134.7	293.80					
3	144.3		58.06					
4	175.6	173.7	23.85	23.88	48.30	48.9		
5	144.1	148.1	23.85	"	48.30	"		
6	129.9	130.0	21.24		54.22	52.7		
7	167.8	163.2	21.24		54.22	"		
8	132.4	132.2	2.61	2.64			2.37	2.36
9	190.6	185.5	58.06					
10	144.4		248.15					
11	133.6	134.1	248.15					
12	74.6	76.6	2.61	2.64				
13	62.1		253.65					
14	73.1	73.5	253.65					
15	129.9	130.0	2.61	2.64			0.42	0.43
16	193.3	187.8						
17	113.5	115.7						
18	132.4	132.2						
19	74.6	76.6					0.42	0.43

UNIT NO.	UNIT TYPE	HEAT TRANSFER C	M
1	D	2690	2580
2	R	403	518
3	C	2800	2890
4	E	2800	2840
5	A	2690	2510

Table A.13. Single-stage heat transformer, Li Br–water: run 162

```
SINGLE STAGE HEAT TRANSFORMER   - LI BR /WATER  : RUN NO.  162
TOLERANCES IN F, X        1.0D-05      1.0D-08
NO. OF UNITS        5
NO. OF STATE POINTS       19
 1   2  1.5560D+02
 5  15  10  11   6  17
 2   3  6.7200D+01
 6   7   4   5   0   0   0
 3   4  6.2250D+02
15  12  13  14  19   0   0
 4   5  3.7310D+02
12   8   1   2  18   0   0
 5   1  2.0360D+02
 7   8   3   9   4  16   0
STARTING POINTS
    1    3   0 142.4   0  294.38   0   0.0   0   0.0
    2    3   1 120.0   0  294.38   0   0.0   0   0.0
    3    3   0 142.4   0   60.81   0   0.0   0   0.0
    4    1   1 120.0   1   10.00   1  45.0   0   0.0
    5    1   1 120.0   1   10.00   1  45.0   0   0.0
    6    1   2 120.0   0   20.91   2  55.0   0   0.0
    7    1   1 120.0   0   20.91   2  55.0   0   0.0
    8    2   3 120.0   2   10.00   0   0.0   1   3.0
    9    3   1 120.0   0   60.81   0   0.0   0   0.0
   10    3   0 142.4   0  249.90   0   0.0   0   0.0
   11    3   1 120.0   0  249.90   0   0.0   0   0.0
   12    3   4 120.0   2   10.00   0   0.0   0   0.0
   13    3   0  61.8   0  257.40   0   0.0   0   0.0
   14    3   1 120.0   0  257.40   0   0.0   0   0.0
   15    2   2 120.0   2   10.00   0   0.0   2   1.0
   16    3   1 120.0   0    1.00   0   0.0   0   0.0
   17    3   1 120.0   0    1.00   0   0.0   0   0.0
   18    3   3 120.0   2   10.00   0   0.0   0   0.0
   19    2   4 120.0   2   10.00   0   0.0   2   1.0
NO. OF VARIABLES          18
NO. OF TEMPERATURES       12
NO. OF CONCENTRATIONS      2
NO. OF FLOWS               2
NO. OF PRESSURES           2
```

Table A.13 (Continued)

LAST ITERATION NO. IS 68
IER = 2

VARIABLE NO.	FUN
1	-1.421D-14
2	-1.069D-12
3	-5.338D-11
4	-3.394D-11
5	1.130D-06
6	-3.884D-06
7	8.072D-12
8	6.321D-12
9	0.000D+00
10	-2.264D-05
11	-3.426D-05
12	3.553D-15
13	-5.326D-13
14	8.968D-08
15	-1.130D-06
16	-5.750D-06
17	-1.421D-14
18	8.882D-16

STATE POINT	TEMPERATURE C	TEMPERATURE M	FLOW RATE C	FLOW RATE M	CONCENTRATION C	CONCENTRATION M	PRESSURE C	PRESSURE M
1	142.4		294.38					
2	133.2	133.2	294.38					
3	142.4		60.81					
4	172.4	170.9	23.43	23.43	48.26	49.0		
5	138.4	141.5	23.43	"	48.26	"		
6	128.1	128.2	20.91		54.08	52.7		
7	168.8	165.2	20.91		54.08	"		
8	129.6	129.6	2.52	2.52			2.20	2.20
9	185.9	181.7	60.81					
10	142.4		249.90					
11	131.8	132.4	249.90					
12	73.4	75.7	2.52	2.52				
13	61.8		257.40					
14	72.4	72.5	257.40					
15	128.1	128.2	2.52	2.52			0.41	0.41
16	190.0	184.3						
17	111.8	114.2						
18	129.6	129.6						
19	73.4	75.7					0.41	0.41

UNIT NO.	UNIT TYPE	HEAT TRANSFER C	HEAT TRANSFER M
1	D	2640	2530
2	R	427	571
3	C	2710	2750
4	E	2710	2710
5	A	2640	2490

Table A.14. Single-stage heat transformer, Li Br–water: run 167

```
SINGLE STAGE HEAT TRANSFORMER   - LI BR /WATER  : RUN NO. 167
TOLERANCES IN F, X        1.0D-05      1.0D-08
NO. OF UNITS        5
NO. OF STATE POINTS       19
 1    2  1.1350D+02
 5   15  10   11    6   17
 2    3  2.1900D+01
 6    7   4    5    0    0    0
 3    4  4.3660D+02
15   12  13   14   19    0    0
 4    5  3.2400D+02
12    8   1    2   18    0    0
 5    1  2.8380D+02
 7    8   3    9    4   16    0
STARTING POINTS
    1     3    0 143.8    0  295.30    0    0.0    0    0.0
    2     3    1 120.0    0  295.30    0    0.0    0    0.0
    3     3    0 143.8    0   59.89    0    0.0    0    0.0
    4     1    1 120.0    1   10.00    1   45.0    0    0.0
    5     1    1 120.0    1   10.00    1   45.0    0    0.0
    6     1    2 120.0    0   22.57    2   55.0    0    0.0
    7     1    1 120.0    0   22.57    2   55.0    0    0.0
    8     2    3 120.0    2   10.00    0    0.0    1    3.0
    9     3    1 120.0    0   59.89    0    0.0    0    0.0
   10     3    0 143.8    0  256.70    0    0.0    0    0.0
   11     3    1 120.0    0  256.70    0    0.0    0    0.0
   12     3    4 120.0    2   10.00    0    0.0    0    0.0
   13     3    0  63.6    0  248.40    0    0.0    0    0.0
   14     3    1 120.0    0  248.40    0    0.0    0    0.0
   15     2    2 120.0    2   10.00    0    0.0    2    1.0
   16     3    1 120.0    0    1.00    0    0.0    0    0.0
   17     3    1 120.0    0    1.00    0    0.0    0    0.0
   18     3    3 120.0    2   10.00    0    0.0    0    0.0
   19     2    4 120.0    2   10.00    0    0.0    2    1.0
NO. OF VARIABLES          18
NO. OF TEMPERATURES       12
NO. OF CONCENTRATIONS      2
NO. OF FLOWS               2
NO. OF PRESSURES           2
```

Table A.14 (Continued)

LAST ITERATION NO. IS 88
IER = 2

VARIABLE NO.	FUN
1	-9.237D-14
2	-1.883D-13
3	2.279D-11
4	7.219D-12
5	2.956D-09
6	-1.139D-09
7	-4.547D-13
8	4.547D-13
9	0.000D+00
10	-1.283D-05
11	-1.692D-05
12	0.000D+00
13	7.105D-15
14	2.176D-10
15	-2.979D-09
16	-1.531D-08
17	-3.553D-15
18	2.887D-15

STATE	TEMPERATURE		FLOW RATE		CONCENTRATION		PRESSURE	
POINT	C	M	C	M	C	M	C	M
1	143.8		295.30					
2	135.1	134.2	295.30					
3	143.8		59.89					
4	170.5	171.1	24.95	25.17	47.21	49.2		
5	143.8	152.2	24.95	"	47.21	"		
6	124.9	129.6	22.57		52.20	52.3		
7	156.2	155.2	22.57		52.20	"		
8	130.8	129.4	2.38	2.60			2.27	2.19
9	183.0	182.0	59.89					
10	143.8		256.70					
11	134.7	134.4	256.70					
12	76.1	77.4	2.38	2.60				
13	63.6		248.40					
14	73.9	75.1	248.40					
15	124.9	129.6	2.38	2.60			0.45	0.47
16	184.2	183.9						
17	112.2	103.9						
18	130.8	129.4						
19	76.1	77.4					0.45	0.47

UNIT NO.	UNIT TYPE	HEAT TRANSFER C	M
1	D	2340	2420
2	R	362	408
3	C	2560	2840
4	E	2560	2840
5	A	2350	2400

INTERNAL DISTRIBUTION

1. V. D. Baxter
2. R. S. Carlsmith
3. F. C. Chen
4. F. A. Creswick
5. R. C. DeVault
6. P. D. Fairchild
7. S. K. Fischer
8. W. Fulkerson
9. S. M. Gillis, Consultant
10. J. Griess
11. W. R. Huntley
12. F. R. Kalhammer, Consultant
13. S. I. Kaplan
14. R. E. Kasperson, Consultant
15. M. A. Kuliasha
16. M. Lessen, Consultant
17. W. P. Levins
18. F. C. Maienschein, Consultant
19. S. H. McConathy
20. V. C. Mei
21. J. W. Michel
22. W. A. Miller
23. W. R. Mixon
24. R. W. Murphy
25. E. A. Nephew
26. H. Perez-Blanco
27. G. T. Privon
28. C. K. Rice
29. M. W. Rosenthal
30. E. A. Vineyard
31. K. H. Zimmerman

32–42. Energy Conservation Distribution Bldg. 9102-2, Room 218

43–44. Laboratory Records Department

45. Laboratory Records—RC
46. ORNL Patent Office

47–48. Central Research Library

49. Document Reference Section

EXTERNAL DISTRIBUTION

50. J. A. Adams, Research and Engineering Center, Whirlpool Corporation, Monte Road, Benton Habor, MI 49022
51. J. A. Andrews, Brookhaven National Laboratory, Upton, NY 11973
52. David A. Ball, Battelle Columbus Laboratories, 505 King Avenue, Columbus, OH 43201
53. J. Berghmans, Universiteit Leuven, Instituut Mechanica, Celestynen Laan 300A, B-3030 Heverlee, Belgium
54. W. J. Biermann, 45 Foxcroft Drive, Fayetteville, NY 13066
55. James M. Calm, Project Manager, Heat Pump Development, Electric Power Research Institute, 3412 Hillview Avenue, Palo Alto, CA 94303
56. R. N. Chappell, Program Manager, Energy Conservation Branch, Energy and Technology Division, DOE Idaho Operations Office, 550 Second Street, Idaho Falls, ID 83401
57. D. D. Colosimo, Mechanical Technology, Inc., 968 Albany-Shaker Road, Latham, NY 12110

58. P. O. Danig, Technical University of Denmark, Refrigeration Laboratory, DTH 402B, DK-2800 Lyngby, Denmark
59. K. Dao, University of California, Lawrence Berkeley Laboratory, Building 90, Room 2024, 1 Cyclotron Road, Berkeley, CA 94720
60. D. A. Didion, National Bureau of Standards, Thermal Machinery Group, Building Equipment Division, CBT, Gaithersburg, MD 20899
61. M. Falek, Gas Energy Inc., 166 Montague Street, Brooklyn, NY 11201
62. R. J. Fiskum, Energy Conversion Equipment Branch, CE-112, GF-217, Department of Energy, 1000 Independence Avenue SW, Washington, DC 20585
63. S. Freedman, Gas Research Institute, 8600 West Bryn Mawr Avenue, Chicago, IL 60631
64. M. Fukiwake, AIST/MITI, 1-3-1 Kasmigaseki, Chiyoda-ku, Tokyo, Japan
65. P. V. Gilli, Technische Hochschule in Graz, Inffeldgasse 25, A-8010 Graz, Austria
66. J. A. Gonzales, Office of Research, Development, and Technology Applications, International Energy Agency, 2, rue Andre-Pascal, 75775 Paris Cedex 16, France
67. J. E. Griffith, Research and Technical Laboratory, PSE&G Research Corporation, 200 Boyden Avenue, Maplewood, NY 07040

68–72. G. Grossman, Technion Institute of Technology, Faculty of Mechanical Engineering, Haifa, Israel

73. W. T. Hanna, Battelle Columbus Laboratories, 505 King Avenue, Columbus, OH 43201
74. J. F. Harris, M.A.C., 11, Boulevard Latour-Maubourg, 75007 Paris, France
75. A. Hayes, Office of Industrial Programs, CE-121, FORSTL, Department of Energy, 1000 Independence Avenue, SW, Washington, DC 20585
76. F. C. Hayes, Thermal Systems, The Trane Company, 3600 Pammell Creek Road, LaCrosse, WI 54601
77. K. Hickman, York Division, Borg-Warner Corporation, York, PA 17405
78. J. Hill, Building 226, Room B306, National Bureau of Standards, Gaithersburg, MD 20899
79. R. Hise, CNG Research Company, 11001 Cedar Avenue, Cleveland, OH 44106
80. B. C. Hwang, David W. Taylor Naval Ship R&D Center, Annapolis Laboratory, Annapolis, MD 21402
81. H. S. Izawa, Northern Natural Gas Company, 2223 Dodge Street, Omaha, NE 68102
82. T. Kapus, Department of Energy, 1000 Independence Avenue, Washington, DC 20585
83. S. A. Klein, University of Wisconsin, Mechanical Engineering Department, Madison, WI 53706
84. W. E. Krauss, Gas Research Institute, 8600 West Bryn Mawr Avenue, Chicago, IL 60631
85. P. Kuppers, KFA/PLE, Postfach 1913, D-5170 Julich 1, Federal Republic of Germany
86. B. Lundquist, Swedish Council for Building Research, St. Goransgatan 66, S-11233 Stockholm, Sweden

87. R. A. Macriss, Institute of Gas Technology, 3424 South State Street, Chicago, IL 60616
88. A. R. Maret, Gas Research Institute, 8600 West Bryn Mawr Avenue, Chicago, IL 60631
89. J. C. Mayor, Swiss Federal Institute for Reactor Research, CE-5303 Wurenlingen, Switzerland
90. K. C. Mead, Management Analysis Center, 124 Mt. Auburn Street, Cambridge, MA 02138
91. M. S. Menzer, American Gas Association, 1515 Wilson Boulevard, Arlington, VA 22209
92. K. P. Murphy, Allied Corporation, Morristown, NY 07960
93. L. A. McNeely, 7310 Steinmeier Drive, Indianapolis, IN 46250
94. J. P. Millhone, Director, Office of Building Energy Research and Development, Department of Energy, 1000 Independence Avenue, SW, Washington, DC 20585
95. K. P. Murphy, Allied Corporation, Morristown, NY 07960
96. H. E. Nimke, The Brooklyn Union Gas Company, 195 Montague Street, Brooklyn, NY 11201
97. B. A. Phillips, Phillips Engineering Company, 721 Pleasant Street, St. Joseph, MI 49085
98. T. Potter, SERI, 1617 Cole Boulevard, Golden, CO 80401
99. R. Radermacher, University of Maryland, Mechanical Engineering Department, College Park, MD 20742
100. V. Recchi, National Research Council-PFE 2, c/o O.T.B., P.O. Box 330, I-70100 Bari, Italy
101. R. C. Reimann, Carrier Corporation, 6304 Carrier Parkway, P.O. Box 4800, Syracuse, NY 13221
102. H. A. Rhea, Lennox Industries, 1600 Metro Drive, Carrollton, TX 75006
103. J. D. Ryan, Energy Conversion Equipment Branch, CE-113.2, Department of Energy, 1000 Independence Avenue SW, Washington, DC 20585
104. J. Saunders, Brookhaven National Laboratory, Upton, NY 11973
105. W. F. Stoecker, University of Illinois, Department of Mechanical Engineering, Urbana, IL 61801
106. P. L. Vanio, Energy Department, Ministry of Trade and Industry, Pohjoinen Makasiininkatu 6, 00130 Helsinki 13, Finland
107. H. van der Ree, TNO-MT, Laan van Westenenk 501, NL-7334 DT Apeldoorn, Netherlands
108. G. C. Vliet, Taylor Hall 116, The University of Texas, Austin, TX 78712
109. M. Wahlig, Lawrence Berkeley Laboratory, University of California, Berkeley, CA 94720
110. J. R. Wright, National Research Council, Division of Building Research, Building R105, Montreal Road, Ottawa K1A OR6, Ontario, Canada
111. Office of the Assistant Manager for Energy R&D, U.S. Department of Energy, Oak Ridge Operations, Oak Ridge, TN 37831

112–138. Technical Information Center, Department of Energy, P.O. Box 62, Oak Ridge, TN 37831

A MODULAR COMPUTER SIMULATION OF ABSORPTION SYSTEMS