SIMULATION AND PERFORMANCE ANALYSIS OF TRIPLE-EFFECT ABSORPTION CYCLES

G. Grossman M. Wilk R.C. DeVault

ABSTRACT

Performance simulation has been carried out for several triple-effect cycles, designed to improve utilization of high-temperature heat sources for absorption systems and capable of substantial performance improvement over equivalent double-effect cycles. The systems investigated include the three-condenser/three-desorber (3C3D) cycle, forming an extension of the conventional double-effect cycle; the recently proposed double condenser coupled (DCC) cycle, which recovers heat from the hot condensate leaving the high-temperature condensers and adds it to the lower-temperature desorbers; and the dual-loop cycle, comprising two complete single-effect loops, recovering heat from the condenser and absorber of one loop to the desorber of the other loop and generating a cooling effect in the evaporators of both loops.

A modular computer code for simulation of absorption systems was used to investigate the performances of the cycles and compare them on an equivalent basis by selecting a common reference design and operating condition. Performance simulation was carried out over a range of operating conditions, including some investigation of the influence of the design parameters. Coefficients of performance ranging from 1.272 for the series-flow 3C3D to 1.729 for the parallel-flow DCC have been calculated at the design point. The relative merits and shortcomings of the different cycle configurations have been studied.

INTRODUCTION

Concerns about the environmental effects of CFCs, electric capacity shortages during periods of peak load, and the substantially increased cost of building new electric power plants have generated renewed and growing interest in gas-fired absorption heat pumps. The last decade saw intensive research and developmental efforts for absorption systems for both heating and cooling applications in the USA, Europe, and Japan. With several large Japanese manufacturers entering the world market and the particular conditions favoring gas utilization in Japan, annual sales of absorption chillers totaled more than $400 million in 199 (DeVault and Grossman 1992). All current gas-fire residential absorption cooling systems are based on th well-known single-effect or double-effect cycle. Single-effect systems (COP = ~0.7) are severely limited in thei ability to utilize high-temperature heat sources and ar particularly suitable for waste heat or solar applications The double-effect cycle (COP = ~1.2) represents a significant step in performance improvement over the basic single-effect cycle.

In an attempt to improve utilization of high-temperature heat sources for absorption systems, a variety of triple-effect cycles have been considered that are capable o substantial performance improvement over equivalen double-effect cycles. Among the proposed cycles are (1) the three-condenser/three-desorber (3C3D) triple-effect cycle (Oouchi et al. 1985), forming an extension of the conventional double-effect cycle, comprising one evaporator, one absorber, three condensers,and three desorbers, recovering heat from each high-temperature condenser to the next lower temperature desorber; (2) the recently proposed double condenser coupled (DCC) cycle (Miyoshi et al. 1985; Biermann and DeVault 1992; DeVault and Grossman 1992), which recovers heat from the hot condensate leaving the high-temperature condensers and adds it to a lower temperature desorber; and (3) the dual-loop triple-effect cycle (DeVault 1988) comprising two complete single-effect loops, recovering heat from the condenser and absorber of one loop to the desorber of the other loop and generating a cooling effect in the evaporators of both loops. Each cycle is described in detail below. Other triple-effect configurations are theoretically possible (Alefeld 1985) but are less suitable for the air-conditioning chiller application. Important considerations in comparing the various systems include not only the energy efficiency of the cycle but also its practicality and potential initial cost.

Triple-effect cycles are often characterized in terms of the number of exchange units they contain (e.g., two condensers and two desorbers, etc.). This characterization gives some measure of the complexity of the system. Also important is the number of pumps, the pressure and

G. Grossman and M. Wilk are on the Faculty of Mechanical Engineering, Technion-Israel Institute of Technology, Haifa. R.C. DeVault is in the Energy Division, Oak Ridge National Laboratory, Oak Ridge, Tennessee.

temperature levels, and the width of the concentration field. Alefeld (1982) has proposed a very useful method for evolving and comparing different absorption cycles on the basis of the above criteria. The comparison is based on a simplified P-T-X plot of the cycle, indicating the location of the exchange units. DeVault and Marsala (1990) have employed similar methods for initial comparison of several types of triple-effect cycles. Alefeld's method is, however, suitable for initial screening only, as it ignores certain important details of the cycle. A variation in the connections between the exchange units (e.g., parallel vs. series connection in a double-effect cycle) will not show in the simplified plot but can make a significant difference in performance (Gommed and Grossman 1990). A detailed calculation of all the cycles' state points is therefore required for an accurate performance evaluation.

The purpose of the present study has been to simulate the various triple-effect cycles in detail and compare their performances to each other and to those of other cycles of more common use. Specifically, systems based on the three triple-effect cycles mentioned above have been compared to each other on an equivalent basis and also to single-effect and double-effect systems using components of the same size. Another goal of the study has been to investigate the effect of various design parameters on the performance of the cycles. Some parametric analysis has been conducted that indicates performance trends.

DESCRIPTION OF TRIPLE-EFFECT CYCLES

Figure 1 shows schematically a three-condenser/three-desorber (3C3D) triple-effect lithium bromide-water chiller, forming an extension of the conventional double-effect cycle. The system has 16 components or sub-units (indicated by the circled numbers) and 42 state points (indicated by the uncircled numbers). Absorber (2) and condenser (5) are externally cooled; desorber (13) is externally heated. Chilled water is produced in evaporator (1). Heat rejected from condenser (6) powers desorber (3) and heat from condenser (14) powers desorber (4). The coupling between each codenser-desorber pair is through a circulating heat-transfer fluid loop, as shown, but may also be achieved by physically combining the two components such that the refrigerant condensing on one side of a heat exchange surface would heat up the solution desorbing on the other side of that surface. The absorbent solution is in a series-flow type 1 arrangement (Gommed and Grossman 1990) with the entire amount of weak solution flowing from the absorber to the low-temperature desorber, continuing to the medium-temperature desorber, then to the high-temperature desorber and back to the absorber. This flow arrangement normally requires three solution pumps. A series-flow type 2 (not shown) is also possible, with the weak solution from the absorber going first to the high-temperature desorber and continuing to the medium- and then to the low-temperature desorber before returning to the absorber. This arrangement may be achieved with one solution pump. According to simulation results of double-effect cycles (Gommed and Grossman 1990), the two series flow arrangements yield very similar performance results.

Figure 2 describes the same cycle in parallel flow, where the weak solution from the absorber is split and divided among the three desorbers. This system has 17 components and 47 state points, counting the extra flow mixers, but is identical in hardware to the system of Figure 1 except for the piping arrangement. According to simulation results of double-effect cycles (Gommed and Grossman 1990), the parallel-flow arrangement is superior in performance to the series flow in terms of increased COP and a lower risk of crystallization.

Figure 3 describes a triple-effect double-condenser-coupled (DCC) chiller in series-flow type 1. The system has 17 components and 44 state points and is very similar to the one in Figure 1. In comparison to the latter, it includes an additional recuperative heat exchanger (17) that subcools the hot condensate leaving the high-temperature condenser (14) and rejects the heat to desorber (3) via the circulation loop 10-11-44. This heat exchanger transfers a modest amount of heat compared to all other units in the cycle. The main effect of this heat recuperation is in providing extra cooling capacity to the evaporator through the now subcooled refrigerant at no additional expenditure of high-grade heat. An added benefit is a somewhat increased generation capacity of the desorber (3). Figure 4 shows the same triple-effect DCC system in a parallel-flow arrangement. The system has 18 components and 49 state points. As evident from Figure 4, the difference between this and the series-flow system is that the weak solution from the absorber is divided at certain fractions among the three desorbers, each receiving only the amount it is supposed to regenerate.

Another variation of the DCC cycle is shown in Figure 5. The system shown is in parallel flow and is very similar to the one in Figure 4 without the recuperator (17). The heat recuperation from the hot condensate and the beneficial subcooling effect associated with it are achieved by discharging the condensate from condenser (14) into the cooler condenser (6) and, similarly, discharging the condensate from condenser (6) into the cooler condenser (5). As will be shown later, this system performs better than the one in Figure 4 and requires one less heat exchanger. This system will be referred to in this paper as DCCA (DCC alternate) and may be configured in series flow as well.

A different type of triple-effect cycle involves a dual loop (DeVault 1988) and is shown in Figure 6. The equivalent cycle combining solid sorbents and liquid sorbents was proposed and studied earlier by Ziegler et al. (1985), who have constructed and tested a laboratory chiller using a zeolite-water high-temperature stage and a lithium bromide-water low-temperature stage. The cycle consists of two

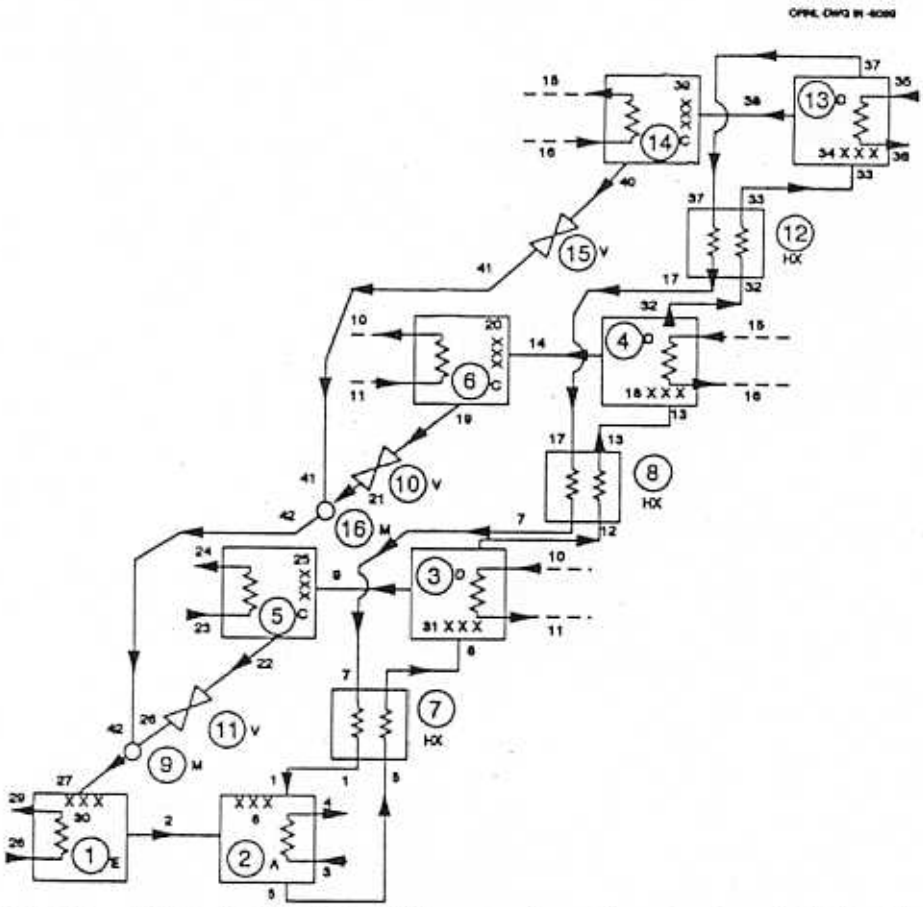

Figure 1 *Schematic description of three-condenser-three-desorber (3C3D) triple-effect chiller in series flow.*

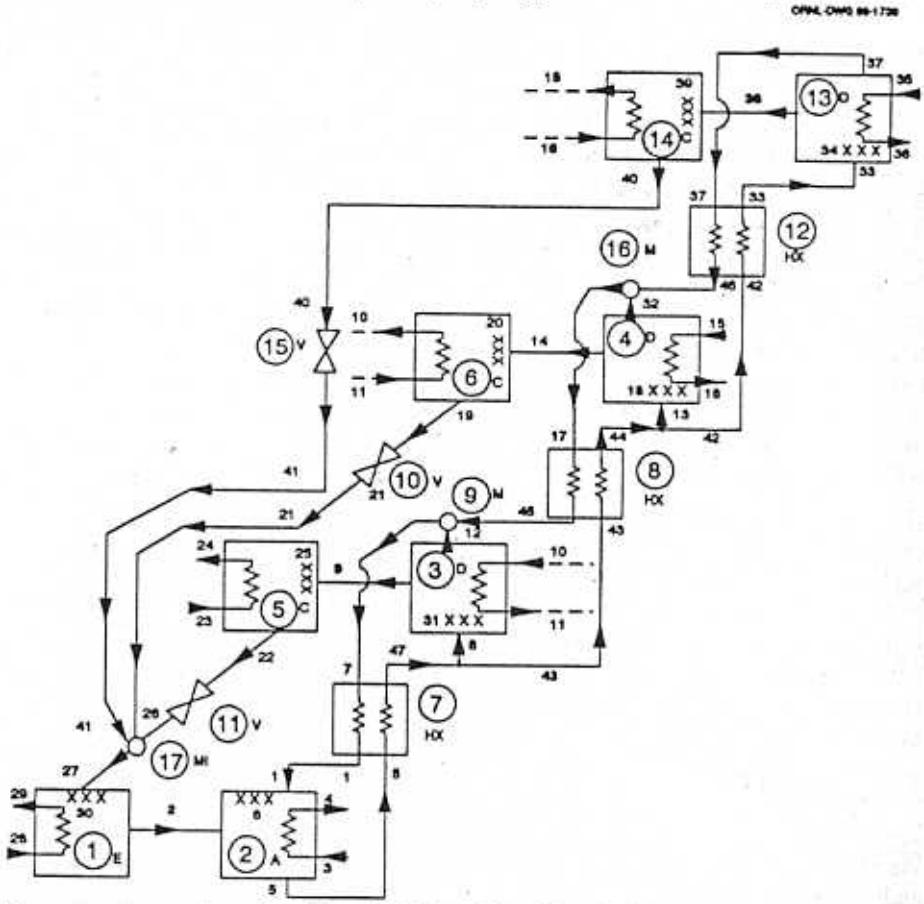

Figure 2 *Schematic description of three-condenser-three-desorber (3C3D) triple-effect chiller in parallel flow.*

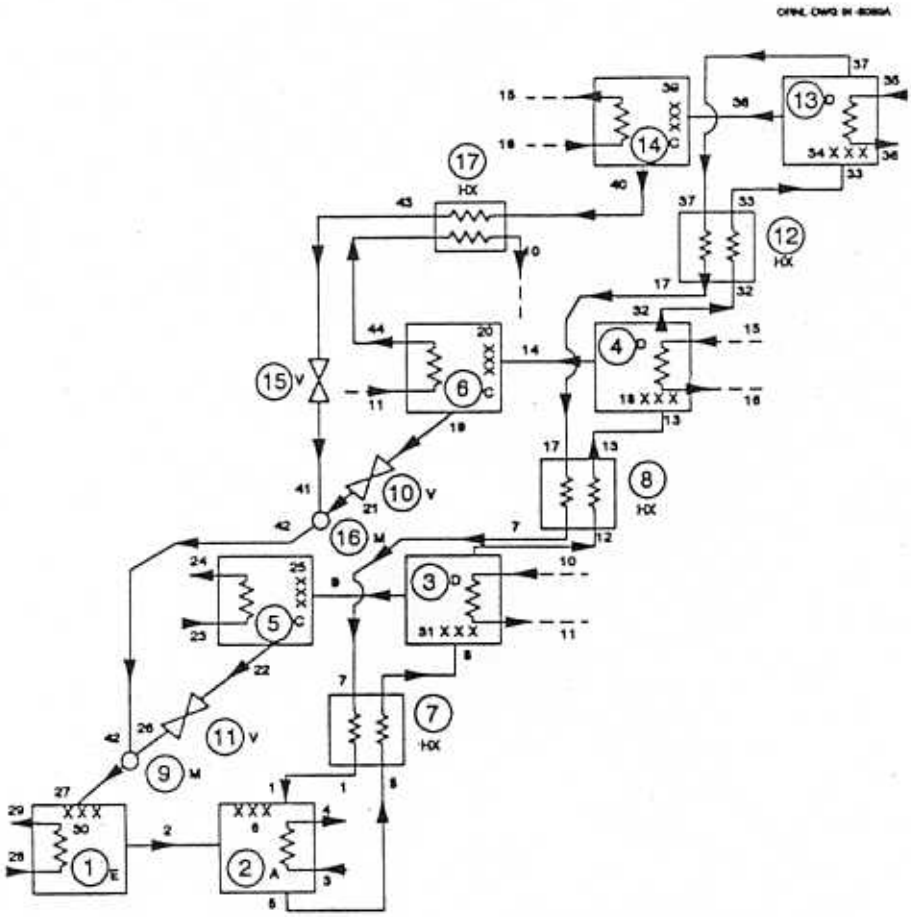

Figure 3 *Schematic description of double-condenser-coupled (DCC) triple-effect chiller in series flow.*

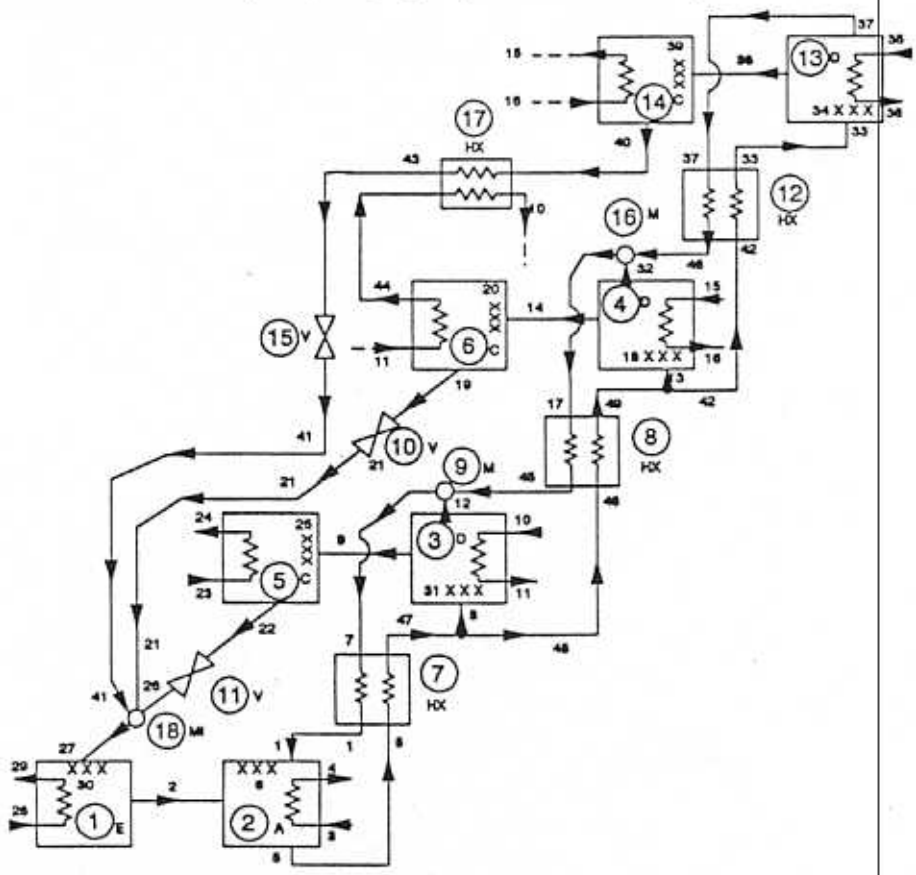

Figure 4 *Schematic description of double-condenser-coupled (DCC) triple-effect chiller in parallel flow.*

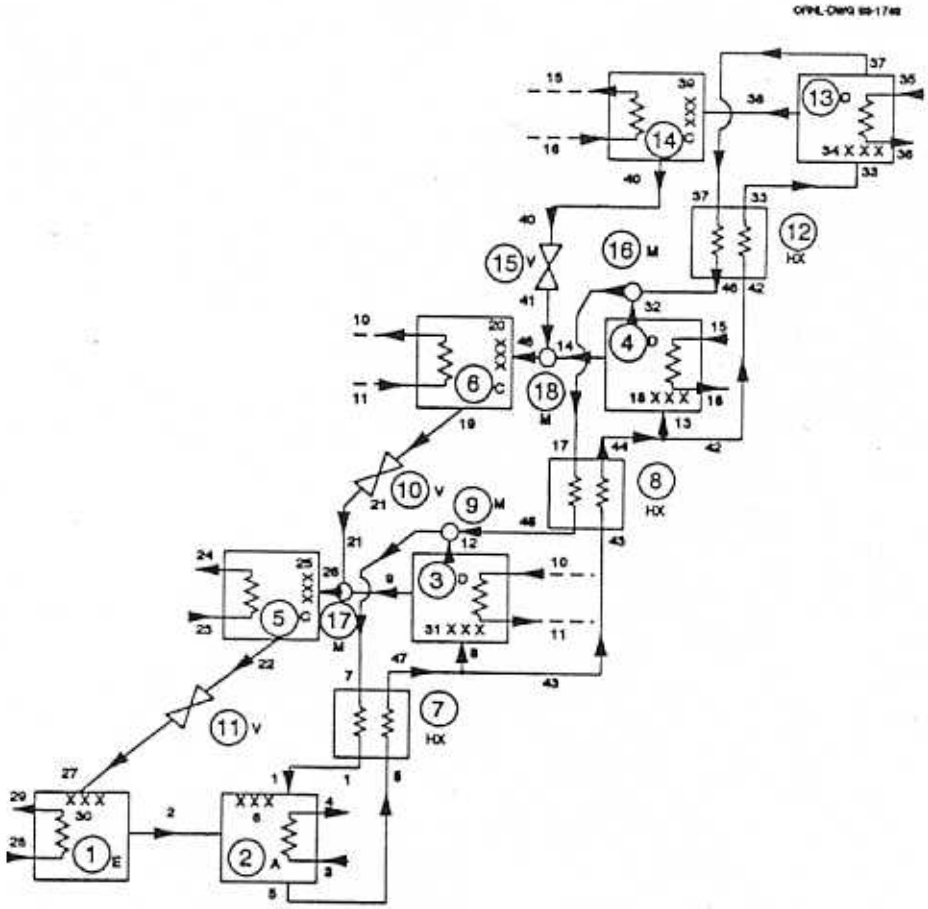

Figure 5 *Schematic description of alternate double-condenser-coupled (DCCA) triple-effect chiller in parallel flow.*

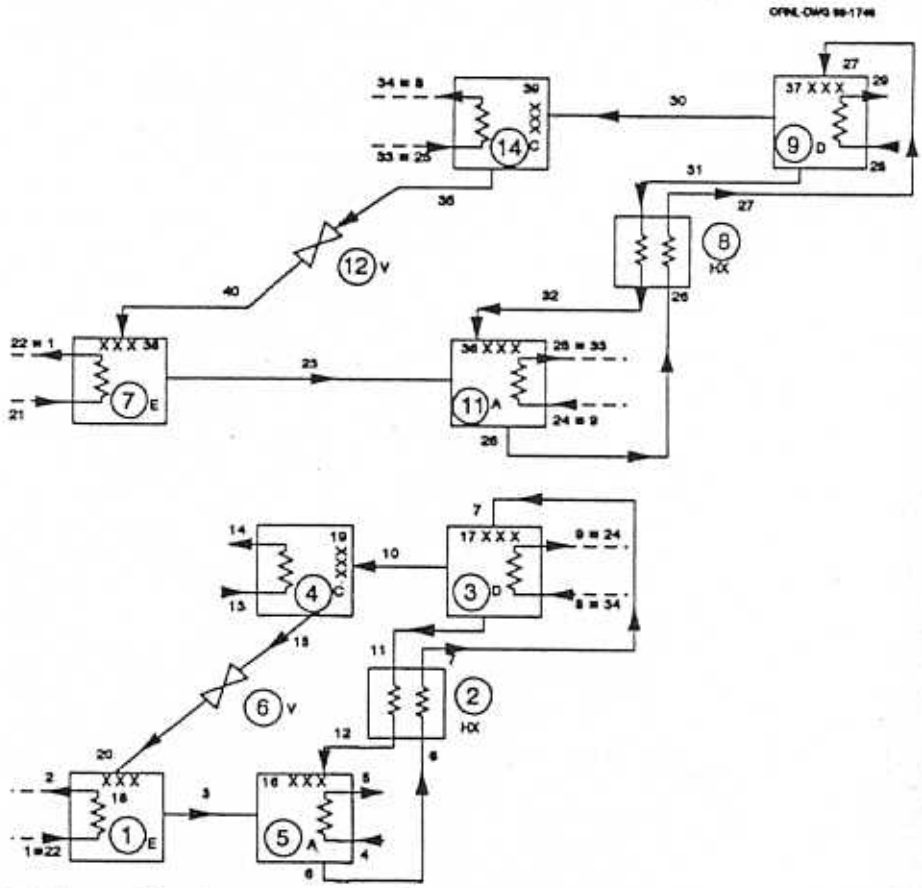

Figure 6 *Schematic description of dual-loop triple-effect chiller showing the two interacting loops.*

separate single-effect loops, with one operating over a wider temperature range than the other. Heat is recovered from the condenser and absorber of the former ("upper") loop to the desorber of the latter ("lower") loop; cooling is produced in the evaporators of both loops. In the system shown in Figure 6, condenser (10) and absorber (11) are coupled to desorber (3) through the closed water loop 8-9-24-25-33-34; evaporators (1) and (7) are connected in series through the chilled-water stream 21-22-1-2; desorber (9) is externally heated; condenser (4) and absorber (5) are externally cooled. The dual-loop triple-effect cycle has a number of advantages compared to the other cycles discussed earlier. The two separate loops make it possible to employ different working substances as may be appropriate for the operating range of each. An "upper loop" may be added to an existing single-effect system, thus retrofitting it into a triple-effect system; this possibility has been considered as a viable option by a major U.S. manufacturer of absorption chillers. The disadvantage is the wide concentration field required of the working fluid in the upper loop, which makes it hard to find a suitable candidate from among conventional absorption fluids.

METHODOLOGY OF SIMULATION

A modular computer code for simulation of absorption systems was used to investigate the performance of the cycles under study. The code, developed specifically for flexible cycle simulation, has been described in detail by Grossman and Wilk (1992) and in a related report (Grossman et al. 1987) containing a user's manual. The modular structure of the code makes it possible to simulate a variety of absorption systems in varying cycle configurations and with different working fluids. The code is based on unit subroutines containing the governing equations for the system's components and on property subroutines containing thermodynamic properties of the working fluids. The components are linked together by a main program, which calls the unit subroutines according to the user's specifications to form the complete cycle. When all the equations for the entire cycle have been established, a mathematical solver routine is employed to solve them simultaneously. The code is user-oriented and requires a relatively simple input containing the given operating conditions and the working fluid at each state point. The user conveys to the computer an image of the cycle by specifying the different components and their interconnections. Based on this information, the code calculates the temperature, flow rate, concentration, pressure and vapor fraction at each state point in the system, and the heat duty at each unit, from which the coefficient of performance (COP) may be determined. The code has been employed successfully to simulate a variety of single-effect, double-effect, and dual-loop absorption chillers, heat pumps, and heat transformers employing the working fluids LiBr-H_2O, H_2O-NH_3, LiBr/$ZnBr_2$-CH_3OH, NaOH-H_2O, and more. Recently, the same code was used to simulate the rather complex generator-absorber heat exchange (GAX) cycle employing ammonia-water in several cycle variations.

The simulation methodology in the present study has followed an approach taken in earlier studies of single- and double-effect cycles (Gommed and Grossman 1990). Since the performance of each system depends on many parameters, the approach taken in all the simulation work has been to establish a design point for the system and vary the relevant parameters around it. In particular, a performance map of COP and cooling capacity as functions of desorber heat supply temperature was generated for each system. Thus, the performance of systems in single, double, and triple stages could be compared not only at a single point but over the entire temperature domain applicable to the cycle.

The system's performance under a given set of operating conditions depends, of course, on the design characteristics and particularly on the size of the heat-transfer surfaces in its exchange units—the evaporators, absorbers, condensers, and desorbers. As a reference case for comparing the different triple-effect cycles, a practical system was considered with economically reasonable, if not optimized, heat-transfer areas. In the earlier study of simpler systems (Gommed and Grossman 1990), we selected as a reference case a single-effect solar-powered lithium bromide-water chiller known as SAM-15 (Biermann 1978) that has been tested extensively. Here, we have created as a reference case a three-condenser/three-desorber (3C3D) triple-effect lithium bromide-water chiller in series-flow type 1 (according to Figure 1) with SAM-15 size evaporator, absorber, condensers, desorbers, and recuperators and with SAM-15 flows of the external fluids. Selecting the reference case in this manner made it possible to use the results of the present triple-effect cycle simulations for comparison with those of the simpler, single- and double-effect cycles (Gommed and Grossman 1990) on an equivalent basis. The design characteristics of the triple-effect reference system are listed in Table 1, including the externally imposed flow rates of cooling and chilled water; the weak absorbent circulation rate; the UAs (overall heat transfer coefficient times area), which characterize the heat-transfer performance of the exchange units; and design point temperatures of the external fluids and of the solution outlet from the gas-fired desorber (for this desorber the external fluid loop is redundant). With these values as input, the simulation code calculates the internal temperatures, flow rates, concentrations, and other operating parameters at all the system's state points from which overall performance parameters may be derived.

The parallel-flow cycles of Figures 2 and 5 differ from the system in Figure 1 only by the piping arrangement. This holds true also for the DCC systems in Figures 3 and 4, which contain, however, an additional small heat exchanger (17). This heat exchanger transfers a modest amount of heat, compared to all other units, and it alone has been

TABLE 1
Characteristic Parameters at Design Point for 3C3D and DCC Triple-Effect LiBr-H_2O Absorption Chillers

Heat Transfer Characteristics (UA)	
Absorber	193.0 Btu/min. °F
Desorbers	268.0 Btu/min. °F
Condensers	565.0 Btu/min. °F
Evaporator	377.0 Btu/min. °F
Recuperative Heat Exchangers	64.0 Btu/min. °F
Mass Flow Rates	
Absorber (cooling water)	483.0 lbs/min
Low-Temperature Condenser (cooling water)	391.0 lbs/min
Evaporator (chilled water)	300.0 lbs/min
Internal Coupling Water Loops, 10-11 and 15-16	400.0 lbs/min
Weak Solution	60.0 lbs/min
Temperatures	
Hot solution outlet from gas-fired desorber (13) (s.p. 37)	425°F
Cooling water inlet (s.p. 3 and 23)	85°F
Chilled water outlet (s.p. 29)	45°F

characterized in all the calculations in terms of a closest approach temperature (CAT) of 5°F. Thus, the set of operating parameters in Table 1 has been selected as the design point for the above four cycles in addition to the reference system of Figure 1. For the parallel-flow systems (Figures 2, 4, and 5), an equal distribution of the weak solution among the three desorbers has been selected at the design point; that is, the flow rates at state points 8, 13, and 33 are 20.0 lbs/min each.

The dual-loop triple-effect cycle (Figure 6) differs from the 3C3D and DCC systems not only by the piping arrangement but, more fundamentally, by the relative roles of its exchange units. A reference system for this cycle has been created by coupling together two single-effect SAM-15 units for the upper and lower loops, following the approach adopted earlier. The design conditions for this system are given in Table 2.

Properties of lithium bromide-water for the simulation were taken from the ASHRAE Handbook (ASHRAE 1985). The thermodynamic property equations were extrapolated, where necessary, to the high-temperature range required by the triple-effect cycles. The amount of extrapolation required varied from cycle to cycle but was relatively moderate for the 3C3D, DCC, and DCCA cycles considered. A rather large extrapolation, both in temperature and in concentration, was required for the dual-loop cycle, which will be discussed in greater detail below in connection with the results obtained for that cycle.

RESULTS OF SIMULATION

In conducting the simulation to generate the operating curves of the above systems, the solution outlet temperature from the gas-fired desorber (13) (state point 37) was varied, while all the other parameters were kept constant. It was assumed that the values of the UA for the exchange units remain constant, while the temperatures and all the other parameters change. In reality, this is not strictly accurate; although the heat-transfer areas (A) remain constant, the heat-transfer coefficients (U) vary somewhat with the temperatures as well as with the loading conditions. However, this variation is relatively weak in most cases, and the assumption of constant UA is a reasonably good approximation. Better fundamental understanding of the combined heat and mass transfer process in absorption and desorption would allow taking the variation of UA with temperature into consideration.

The coefficient of performance (COP) of the different cycles has been defined here as the ratio of the heat quantity in the evaporator(s) producing the desired cooling effect to that supplied to the externally heated, high-temperature desorber. The effect of pumping and other parasitic losses is not considered.

Figure 7 shows the COP of the reference triple-effect series-flow type 1 system (Figure 1) as a function of the heat supply temperature to the externally heated desorber (13) for different cooling water inlet temperatures and for a fixed chilled-water outlet temperature. The curves for the single-effect SAM-15 and for a series-flow type 1 double-effect system with SAM-15 size components are plotted together for comparison. The latter curves were taken from simulations conducted under the earlier study of Gommed and Grossman (1990) using the same code. The design point for each system is indicated by a dot. The COP of the ideal Carnot cycle operating under the same conditions is also included for comparison. It is evident that all systems exhibit the same typical, qualitative behavior, with the COP increasing sharply from zero at some minimum tempera-

TABLE 2
Characteristic Parameters at Design Point for Dual-Loop Triple-Effect LiBr-H_2O Absorption Chiller

Heat Transfer Characteristics (UA)	
Absorbers	193.0 Btu/min. °F
Desorbers	268.0 Btu/min. °F
Condensers	565.0 Btu/min. °F
Evaporators	377.0 Btu/min. °F
Recuperative Heat Exchangers	64.0 Btu/min. °F
Mass Flow Rates	
Low-Temperature Absorber (cooling water)	483.0 lbs/min
Low-Temperature Condenser (cooling water)	391.0 lbs/min
Evaporators Loop, s.p. 21-22-1-2 (chilled water)	300.0 lbs/min
Coupling Water Loop, s.p. 8-9-24-25-33-34	416.0 lbs/min
Weak Solution, Upper and Lower Loops	60.0 lbs/min
Temperatures	
Hot solution outlet from gas-fired desorber (9) (s.p. 31)	425°F
Cooling water inlet (s.p. 4 and 13)	85°F
Chilled water outlet (s.p. 2)	45°F

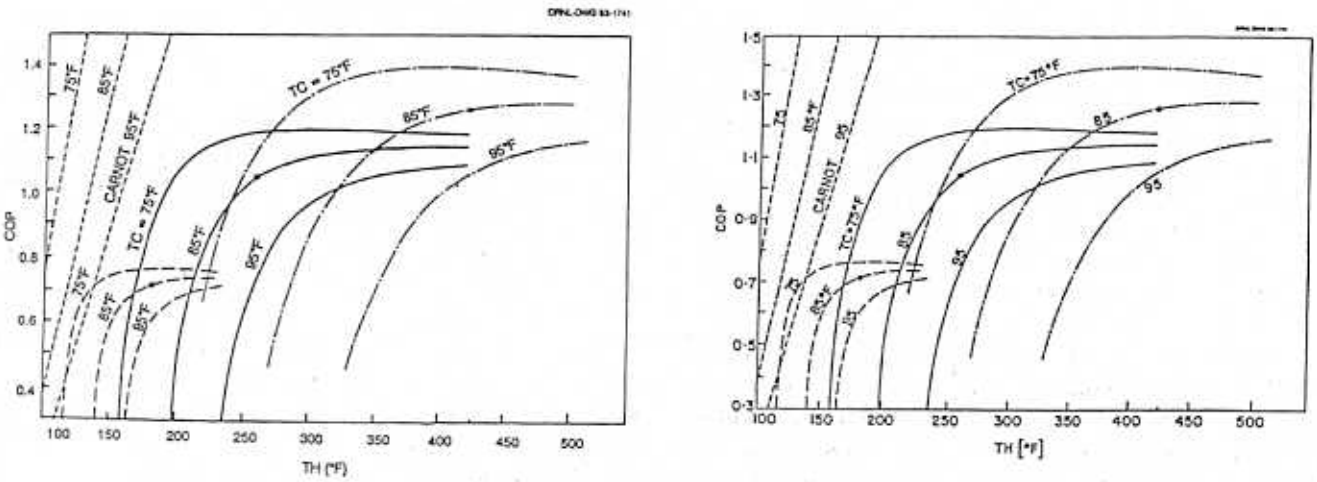

Figure 7 *Coefficient of performance for single-effect (dashed lines), double-effect series-flow (solid lines), and triple-effect series-flow (dot-dashed lines) systems as functions of operating temperatures. Carnot COP for the same operating conditions is given by the dotted lines.*

ture, then levelling off to some constant value at a higher temperature, and even decreasing slightly with further increase in temperature. The reason for this behavior is well understood and is explained in detail in Gommed and Grossman (1990). The triple-effect system has a COP higher than the single- and double-effect cycles but requires a higher minimum heat supply temperature in order to begin operating. For all three systems, the COP is closest to Carnot in the "knee" of the curve and levels off as the heat supply temperature increases. The single-effect system gives best results in the heat supply temperature range of 150-220°F. Above that, from the COP point of view, it is beneficial to switch to the double-effect system, which performs best at the heat supply temperature range of 220-300°F. With a still higher heat supply temperature, a triple-effect system is more desirable.

Figure 8 shows the COP for the five cycles in Figures 1, 2, 3, 4, and 5 as a function of the heat supply temperature to the externally heated desorber (13) for fixed values of the design cooling water inlet temperature (85°F) and chilled-water outlet temperature (45°F). The typical behavior of the COP, increasing sharply from zero at some minimum temperature and then leveling off to some constant value at higher temperatures, is clearly observed here. As expected, the two DCC systems with a condensate recuperator (Figures 3 and 4) show a higher COP than their 3C3D counterparts (Figures 1 and 2). In each category, the parallel-flow system yields better performance than the

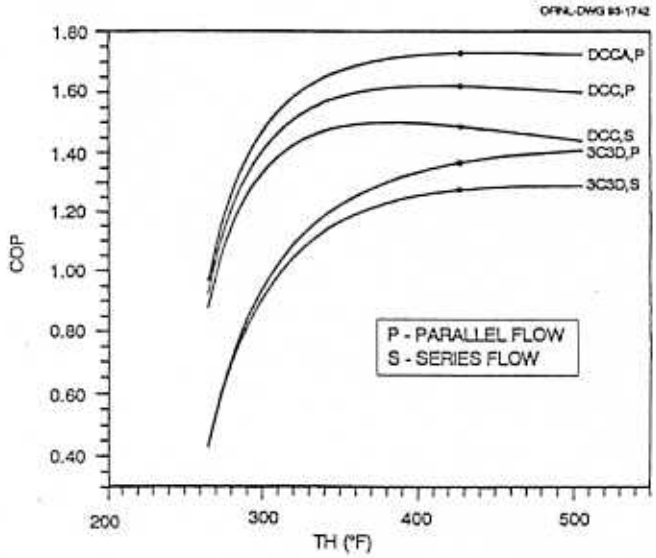

Figure 8 *Coefficient of performance for five DCC, DCCA, and 3C3D triple-effect cycles as a function of the heat supply temperature to the high-temperature desorber.*

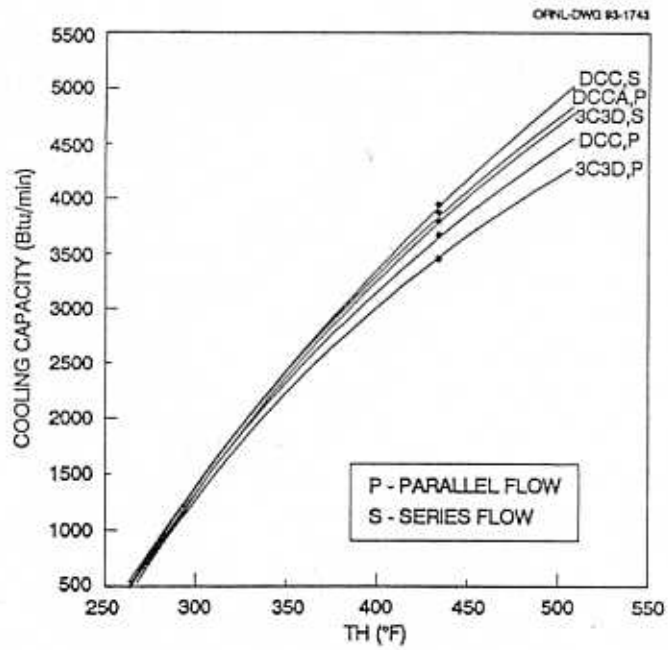

Figure 9 *Cooling capacity for five DCC, DCCA, and 3C3D triple-effect cycles as a function of the heat supply temperature to the high-temperature desorber.*

series flow. The best performance is exhibited by the parallel-flow DCCA system of Figure 5. In comparing the series-flow DCC with the series-flow 3C3D cycle, the following trend is observed. At low temperatures, the COP curves for the two cycles approach each other with no advantage to the DCC. With increasing temperature, the value of subcooling the refrigerant becomes more significant, resulting in a higher COP for the DCC than the 3C3D. The same trend is valid for the three parallel-flow systems.

A definite advantage of the parallel-flow systems is evident over those with series flow. The main reason for this is that in the series-flow systems, the entire amount of absorbent solution passes through all three desorbers, whereas in the parallel-flow systems, each desorber receives only the amount of solution it needs to regenerate. This reduces circulation losses considerably. The same trend is evident in double-effect systems (Gommed and Grossman 1990). Another advantage of the parallel-flow system is in reduced concentration at the absorber inlet (state point 1), which reduces the risk of crystallization. In the series-flow systems, the high concentration solution generated at the high-temperature desorber (13) flows clear to the absorber while cooling down. In the parallel-flow systems, the same solution is diluted on its way to the absorber and its concentration is lowered by mixing with solution streams from the lower temperature desorbers (3) and (4). For comparison, the design point concentration of the strong LiBr-H_2O solution at the absorber inlet (state point 1) is 64.1% for the series-flow DCC (Figure 3) and only 63.0% for the parallel-flow DCC (Figure 4).

Figure 9 describes the cooling capacity for the five cycles in Figures 1, 2, 3, 4, and 5 as a function of the heat supply temperature to the externally heated desorber (13) for the same fixed conditions as in Figure 8. The capacity increases almost linearly with the heat supply temperature. Here again, the DCC systems yield better performance than their 3C3D counterparts. It is evident that in each category, the series-flow system yields slightly higher capacity than the parallel-flow system. The difference is small at low temperatures and becomes more significant at higher temperatures. The cause for this is the higher concentration at the absorber inlet for series-flow systems, which was discussed above; for the same temperature absorber, this causes the evaporator to operate at a lower pressure and thus at a lower evaporation temperature, yielding more capacity.

The solution flow rate distribution among the three desorbers in the parallel-flow systems (Figures 2, 4, and 5) has been selected to be equal at the design point. However, an equal distribution of solution is not necessarily optimal. Based on the simulation of double-effect systems (Gommed and Grossman 1990), an improvement may be gained by deviating from an equal distribution both in increasing the COP and reducing the risk of crystallization. Here, the effect of varying the solution flow rate to the three desorbers has been investigated for the parallel-flow DCCA system of Figure 5, operating otherwise at the design condition. Figure 10 shows the COP of the system as a function of the solution flow rate to the intermediate temperature desorber (state point 13) for different values of the flow rate to the high-temperature desorber (state point 33). The rest of the design solution flow rate (totalling 60 lb/min) goes to the low-temperature desorber. In the

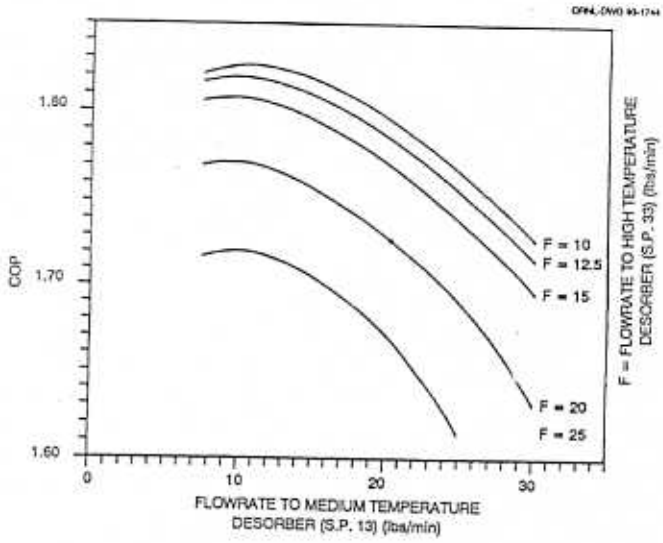

Figure 10 *Coefficient of performance for the parallel-flow DCCA cycle as a function of the solution flow rate distribution to the three desorbers.*

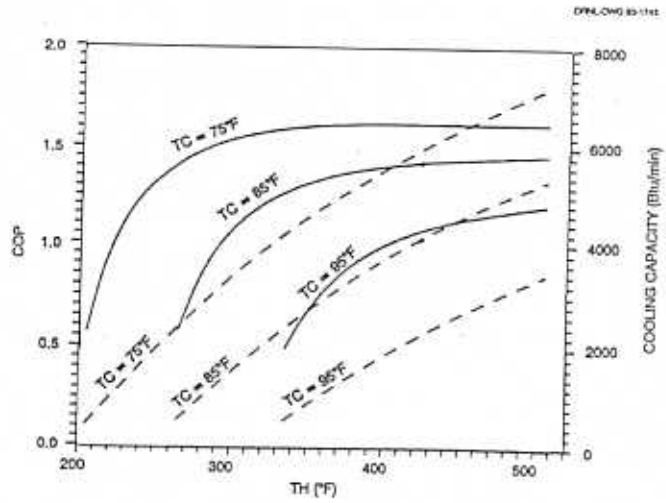

Figure 11 *Coefficient of performance (solid lines) and cooling capacity (dashed lines) for the dual-loop triple-effect cycle as functions of the heat supply temperature to the externally heated desorber.*

extreme cases where either of the three desorbers is starved for solution, the entire system goes out of balance and both the COP and capacity tend to be zero. As evident from Figure 10, the optimal distribution of solution to the high-, medium-, and low-temperature desorbers are approximately 10, 10, and 40 lb/min, respectively. Under this condition, the COP reaches 1.825 instead of 1.729 at equal distribution; the solution concentration at the absorber inlet (state point 1) is reduced to 60.5% compared to 62.9% at equal distribution. The capacity is reduced somewhat due to the lower concentration, as explained in the previous paragraph. Note that the optimum flow distribution at the design temperatures is not necessarily preserved in off-design conditions.

Figure 11 describes the COP and capacity for the dual-loop system (Figure 6) as functions of the heat supply temperature to the externally heated desorber (9) for different cooling water inlet temperatures and a fixed chilled-water outlet temperature (45°F). The simulation was carried out with the properties of lithium bromide-water extrapolated, as explained above. For the dual-loop cycle, concentrations in the upper loop are often very large, beyond the crystallization limit of this aqueous solution with no additives. A number of absorbent salt mixtures for water refrigerant absorption systems have been proposed and patented over several decades (e.g., Aronson 1969). Some of these salt mixtures can operate at higher concentrations without crystallizing, compared to lithium bromide-water, while otherwise having similar thermodynamic properties. Unfortunately, reported thermodynamic data for these proposed salt mixtures are not adequate for detailed cycle calculations. For this reason, the existing properties of lithium bromide-water were extrapolated and used in the present simulation as an approximation of those of another salt mixture-based working fluid that could actually be employed. As is evident from Figure 11, the behavior of the COP and capacity is typical of absorption systems and qualitatively similar to that in the other triple-effect cycles. The COP at the design point is 1.428, lower than that of the parallel-flow DCC and DCCA systems. However, one should note that the dual-loop reference system (Table 2), constructed of two identical SAM-15 loops, constitutes a non-optimal match between the upper and lower loop. In this system, the lower loop carries about twice the heat capacity of the upper loop. By changing the weak solution's flow rate in the upper loop from 60 lb/min in the reference condition (Table 2) to 30 lb/min, with all other parameters remaining the same, the COP increases from 1.428 to 1.838. The cooling capacity decreases from 2977 to 2788 Btu/min. The absorber inlet concentration in the upper loop (calculated from extrapolated lithium bromide water properties) for the two cases is 79.3% and 79.9%, respectively. Further optimization may be possible. Note that some unit size mismatch exists in the 3C3D and DCC reference systems as well. A constrained optimization study is in order, where the COP of the various cycles would be maximized under a requirement for a fixed cooling capacity, fixed heat supply temperatures, and fixed total UA (or properly weighed total UA) of the system. The optimizer will select the optimal distribution of UA among the system's components and select the optimum solution flow rate. This is the subject of another study.

CONCLUSION

Performance simulation has been carried out for several triple-effect cycles, including the three-condenser/three-desorber (3C3D), the double condenser coupled (DCC), and the dual-loop configurations. A common reference condition was established for the triple-effect cycles based on the component sizes and flow rates of the single-effect SAM-15 system. Performance simulation was carried out over a range of operating conditions, including some investigation of the influence of the design parameters. COPs ranging from 1.272 for the series-flow 3C3D to 1.729 for the parallel-flow DCCA have been calculated at the design point. The DCC cycles constitute an improvement over the corresponding 3C3D cycles, which may be obtained at essentially no additional cost through a different piping arrangement. In each category, the parallel-flow system yields a better COP than the series flow, with a lower risk of crystallization but with slightly reduced capacity. Under some conditions, the dual-loop system can reach a COP as high or higher than the best DCC should a viable working fluid be identified for the upper loop. An optimization study must be carried out in order to fully determine its potential.

NOMENCLATURE

TH = temperature of solution leaving the externally heated, gas-fired desorber, characterizing the heat supply temperature (e.g., T_{37} in Figures 1-5)

TC = cooling water supply (inlet) temperature (e.g. T_3 and T_{23} in Figures 1-5)

ACKNOWLEDGMENT

This work has been supported in part under Oak Ridge National Laboratory Subcontract 80X-SK033V.

REFERENCES

Alefeld, G. 1982. Regeln fur den Entwurf von Mehrstufigen Absorbermaschinen (Rules for the design of multistage absorption machines). *Brennst-Warme-Kraft* 34:64-73.

Alefeld, G. 1985. Multi-stage apparatus having working fluid and absorption cycles, and method of operation thereof. U.S. Patent 4,531,372, July 30.

Aronson, D. 1969. Absorption refrigeration system. U.S. Patent 3,478,530, November 18.

ASHRAE. 1985. *1985 ASHRAE Handbook—Fundamentals*, pp. 17.69-17.70. Atlanta: American Society of Heating, Refrigerating and Air-Conditioning Engineers, Inc.

Biermann, W. J. 1978. Prototype energy retrieval and solar system, Bonneville Power Administration. *Proceedings, 3rd Workshop on the Use of Solar Energy for Cooling of Buildings*, San Francisco, CA, pp. 29-34. Also personal communication regarding Carrier SAM-15 solar-powered water-lithium bromide absorption chiller, July 1986.

Biermann, W.J., and R.C. DeVault. 1992. Triple-effect absorption refrigeration system with double-condenser coupling. U.S. Patent application, pending.

DeVault, R.C. 1988. Triple-effect absorption chiller utilizing two refrigerant circuits. U.S. Patent 4,732,008, March 22.

DeVault, R.C., and G. Grossman. 1992. Triple-effect absorption chiller cycles. Presented at the International Gas Research Conference IGRC92, Orlando, Florida, November 16-19.

DeVault, R.C., and J. Marsala. 1990. Ammonia-water triple-effect absorption cycle. *ASHRAE Transactions* 96(1).

Gommed, K., and G. Grossman. 1990. Performance analysis of staged absorption heat pumps: Water-lithium bromide systems. *ASHRAE Transactions* 96(1).

Grossman, G., K. Gommed, and D. Gadoth. 1987. A computer model for simulation of absorption systems in flexible and modular form. *ASHRAE Transactions* 93(2).

Grossman, G., and M. Wilk. 1992. Advanced modular simulation of absorption systems. Presented at the 1992 ASME Winter Annual Meeting, Anaheim, CA, November 8-13.

Miyoshi, N., S. Sugimoto, and M. Aizawa. 1985. Multi-effect absorption refrigerating machine, U.S. Patent 4,551,991, November 12.

Oouchi, T., S. Usui, T. Fukuda, and A. Nishiguchi. 1985. Multi-stage absorption refrigeration system, U.S. Patent 4,520,634, June 4.

Ziegler, F., F. Brandl, J. Volkl, and G. Alefeld. 1985. A cascading two-stage sorption chiller system consisting of a water-zeolite high temperature stage and a water-LiBr low temperature stage. *Proceedings, the Absorption Heat Pumps Congress*, Paris, France, March 20-22, pp. 231-238.